eog resources

EOG Resources, Inc.
600 Seventeenth Street
Suite 1000N
Denver, CO 80202
Main: 303-572-9000
Fax: 303-824-5400

RECEIVED
DEC 23 2014
AIR QUALITY DIVISION

December 22, 2014

Attn: O&G Production Facilities
Wyoming Department of Environmental Quality
Air Quality Division
Herschler Building, 2-E
122 West 25th Street
Cheyenne, Wyoming 82002

RE: EOG Resources, Inc.
Air Permit Application –Mary's Draw 412-1527H, Mary's Draw 411-15H
Converse, Wyoming

Dear WDEQ:

EOG Resources, Inc. (EOG) is submitting the enclosed Chapter 6 Section 2 (C6S2) air permit application using the IMPACT Data System Forms. The air permit application is being submitted for Mary's Draw 412-1527H, Mary's Draw 411-15H which is a facility with two wells running independent surface equipment.

Well Name	First Date of Production	Natural Gas Rate (MSCFD)	Crude Oil Rate (BPD)	Produced Water Rate (BPD)
Mary's Draw 412-1527H	9/22/2014	304.4	1038.0	816.7
Mary's Draw 411-15H	9/24/2014	238.8	376.9	253.7

Each well produces both crude oil and natural gas. Each well pad consists of the following sources of emissions:

Mary's Draw 412-1527H

- Five (5) Crude Oil Storage Tanks (400 bbl capacity each);
- Two (2) Produced Water Storage Tanks (400 bbl capacity each);
- One (1) Emergency Storage Tank (400 bbl capacity);
- One (1) Treater (0.75 MMBtu/hr burner capacity);
- One (1) Trace Line Heater (0.375 MMBtu/hr burner capacity);
- One (1) Vapor Recovery Tower (VRT);
- One (1) Flare;
- Truck Loading Operation;
- Blowdowns; and
- Fugitive Components.

Reviewer BMD
cc:
Modeler
D.E.
File A0000371
IMP FID 26572

Mary's Draw 411-15H

- Five (5) Crude Oil Storage Tanks (400 bbl capacity each);
- Two (2) Produced Water Storage Tanks (400 bbl capacity each);
- One (1) Emergency Storage Tank (400 bbl capacity);
- One (1) Treater (0.75 MMBtu/hr burner capacity);
- One (1) Trace Line Heater (0.375 MMBtu/hr burner capacity);
- One (1) Vapor Recovery Tower (VRT);
- One (1) Flare;
- Truck Loading Operation;
- Blowdowns; and
- Fugitive Components.

Gas and liquids rise to the surface through the well head. The gas/liquid mixture enters a treater to separate the natural gas, crude oil, and produced water. The natural gas stream is tied into a pipeline. In the event of pipeline shut-in, the gas from the heater treater can be flared. Crude oil is sent to a vapor recovery tower (VRT) and water is sent to the produced water tanks. Oil from the VRT is sent to production oil tanks, and the flashed gas from the VRT and the tanks is sent to the flare. The crude oil is produced in five storage tanks and hauled away by truck. The water is produced in two storage tanks and also hauled away by truck as necessary. The tank vapors from the well's crude and produced water tanks are controlled and routed to a flare that has a destruction efficiency of 98%. The truck loading vapor emissions are controlled and routed to the flare with a capture efficiency of 70%.

Supporting documents are found in the following attachments:

- Attachment A: Signed original copy of the IMPACT permit application.
- Attachment B: Flow diagram/plot plan of the emissions unit.
- Attachment C: Facility process description.
- Attachment D: Current well production rates.
- Attachment E: Gas/oil analyses
- Attachment F: Detailed emission calculations and supporting documentation.

We trust the attached permit application package will meet your expectations and that you will not hesitate to call me at (303) 262-9914 or James VanAssche of Conestoga-Rovers & Associates (CRA) at 720-974-0953 if you have any questions or need additional information. We appreciate your prompt attention to this most important project.

Sincerely,

Jason Rauen
EOG Environmental – Denver Division

cc: File – Well
James VanAssche

Attachments: As stated

Attachment A

Signed Original Copy of IMPACT Permit Application

Wyoming Department of Environmental Quality
Air Quality Division
New Source Review Permit Application Form

Is this a revision to an existing application?
Yes_____ No ✓
Previous Application # N/A

Date of Application: 12/22/2014

COMPANY INFORMATION:

Company Name: EOG Resources, Inc.

Address: 600 17th Street, Suite 1000N
City: Denver
State: CO Zip Code: 80202
Country: USA
Phone Number: 303-262-9914

FACILITY INFORMATION:

Facility Name: Mary's Draw 412-1527H, Mary's Draw 411-15H

New Facility or Existing Facility: New

Operating Status : Operating

Facility Description: Oil and Gas Production

Facility Class: Synthetic Minor

Facility Type: Production Site
API Number(s): 49-009-28634, 49-009-29463

NAICS Code(s): 211111 Crude Petroleum and Natural Gas Extraction

FACILITY LOCATION:

City: Douglas

State: WY Zip Code: 82633

County: Converse

Physical Address:

**Enter the facility location in either the latitude/longitude area or section / township / range area. Both are not required.*

EITHER

Latitude: 43.43606 Longitude: -105.48730

OR

Quarter Quarter: Quarter:

Section:

Township:

Range:

CONTACT INFORMATION:

**Note that an Environmental AND NSR Permitting Contact are required for your application to be deemed complete by the agency.*

Title: Mr.

First Name: Jason

Last Name: Rauen

Company Name: EOG Resources, Inc.

Job Title: Senior Environmental Specialist

Address: 600 17th Street, Suite 1000N

City: Denver

State: CO Zip Code: 80202

Primary Phone No.: (303) 262-9914

Mobile Phone No.: (970) 270-8733

FAX No.: (303) 262-9449

E-mail: Jason_Rauen@eogresources.com

Contact Type:	Environmental Contact
Additional Contact Type (if needed):	
Additional Contact Type (if needed):	

Additional Contacts?

Title:

First Name:

Last Name:

Company Name:

Job Title:

Address:

City:

State: Zip Code:

Primary Phone No.:

Mobile Phone No.:

FAX No.:

E-mail:

Contact Type:	
Additional Contact Type (if needed):	
Additional Contact Type (if needed):	

FACILITY APPLICATION INFORMATION:

General Info

Has the facility changed location or is it a new/ greenfield facility?	Yes
Has a Land Use Planning document been included in this application?	No
Does production at this facility contain H2S?	No
Is the facility located in sage grouse core area? *	No

If yes, what is the WER number? N/A

** For questions about sage grouse core area, contact WY Game & Fish Department.*

Federal Rules Applicability - Facility Level

Prevention of Significant Deterioration (PSD):	No
Non-Attainment New Source Review:	No

Modeling Section

Has the Air Quality Division been contacted to determine if modeling is required?	No
Is a modeling analysis part of this application?	No
Is the proposed project subject to Prevention of Significant Deterioration (PSD) requirements?	No
Has the Air Quality Division been notified to schedule a pre-application meeting?	No
Has a modeling protocol been submitted to and approved by the Air Quality Division?	No
Has the Air Quality Division received a Q/D analysis to submit to the respective FLMs to determine the need for an AQRV analysis?	No

REQUIRED ATTACHMENTS

Facility Map

Modeling Analysis (if applicable)

Detailed Project Description

Land Use Planning Document

Sign (wet ink) and print this page and submit it with your application.

I, Jason Rauen

Printed Name (Title)

an Official Representative of the Company, state that I have knowledge of the facts herein set forth and that the same are true and correct to the best of my knowledge and belief. I further certify that the operational information provided and emission rates listed on this application reflect the anticipated emissions due to the operation of this facility. The facility will operate in compliance with all applicable Wyoming Air Quality Standards and Regulations.

Signature: (wet ink)

Mary's Draw 412-1527H IMPACT FORMS

Company: EOG Resources, Inc. Facility: Mary's Draw 412-1527H, Mary's Draw 411-15H
EU Type: Tank EUID: T1 (6538)

Emission Unit Type:	Tank	Date of Application:	12/22/2014
AQD Emission Unit ID:		EU ID used by Company:	T1 (6538)
Emission Unit Description Used by Company:	Oil Storage Tank 6538 =BE4522-400 bbl		

Emission Unit Installation or Modification Schedule- *Select reason(s) for this emissions unit being included in this application (must be completed regardless of date of installation or modification) and the date associated with the EU Installation of Modification Schedule:*

Reason: Construction (greenfield/new facility)

If Reason = ***Construction (greenfield/new facility)****, enter date contruction began:*	Date:	9/20/2014
If Reason = ***Synthetic Minor****, enter date emissions unit became new synthetic minor:*	Date:	
If Reason = ***Modification****, enter modification date or date modification began:*	Date:	
If Reason = ***Temporary Permit****, enter beginning date for temporary permit:*	Date:	
If Reason = ***Reconstruction****, enter beginning date for reconstruction:*	Date:	

If the Reason is: **Reconstruction** *or* ***Temporary Permit*** *or* **Other** *please explain below:*

Oil and Gas Production Site ***ONLY***

if Reason = **Construction (greenfield/new facility)** will production commence after permit is issued?		NO
if previous question's answer is No" (production not waiting until after permit), then provide first date of production:	Date:	9/22/2014

List in the area below any previous NSR permit numbers for air contaminant sources included in this application, if applicable, and describe the requested modification. Attach an additional sheet if necessary:

N/A

SCC Codes

Enter SCC for each process. Enter at least one SCC Code. Click to see SCC Code List

Enter SCC Code		*SCC Short Name*	See Level 4 Name
SCC Code 1 (Required Field):	2310011020	On-Shore Oil Production /Storage Tanks: Crude Oil	Storage Tanks: Crude Oil
SCC Code 2 (as needed):			
SCC Code 3 (as needed):			

General Emission Unit Dates

Initial Construction Commencement Date:	9/20/2014
Initial Operation Commencement Date:	9/22/2014
Most Recent Construction/ Modification Commencement Date:	
Most Recent Operation Commencement Date:	

Potential Operating Schedule:

Provide the operating schedule for this emission unit.

Hours/day:	24
Hours/year:	8760

Company: EOG Resources, Inc. Facility: Mary's Draw 412-1527H, Mary's Draw 411-15H
EU Type: Tank EUID: T1 (6538)

Criteria Pollutants

The following tables request information that is needed to determine the applicable requirements and the compliance status of this emission unit with those requirements.

Criteria Pollutants						
		Efficiency Stds.				
Pollutant	Pre-Controlled Potential Emissions (tons/yr)	Potential to Emit (PTE)*	Units*	Potential to Emit (lbs/hr)*	Potential to Emit (tons/yr)*	Basis for Determinatio n*
Particulate emissions (PE/PM) (formerly particulate matter)						
PM =10 microns in diameter (PE/PM10)						
PM =2.5 microns in diameter (PE/PM2.5)						
Sulfur dioxide (SO2)						
Nitrogen Oxides (Nox)						
Carbon monoxide (CO)						
Volatile organic compounds (VOC)	1.96			0.01	0.04	ProMax
Lead (Pb)						
Tota Hazardous Air Pollutants (HAPs)	0.02			0.00	0.00	ProMax
Fluoride (F)						
Hydrogen Sulfide (H2S)						
Mercury (Hg)						
Total Reduced Sulfur (TRS)						
Sulfuric Acid Mist (SAM)						

*Provide your calculations as an attachment and explain how all process variables and emissions factors were selected.

Hazardous Air Pollutants (HAPs) and Toxic Air Contaminants

Hazardous Air Pollutants (HAPs) and Toxic Air Contaminants						
		Efficiency Stds.				
Pollutant	Pre-Controlled Potential Emissions (tons/yr)	Potential to Emit (PTE)*	Units*	Potential to Emit (lbs/hr)*	Potential to Emit (tons/yr)*	Basis for Determinatio n*
Benzene	1.20E-05			5.49E-08	2.41E-07	ProMax
Toluene	0.01			4.47E-05	1.96E-04	ProMax
Ethylbenzene	0.00			2.19E-06	9.57E-06	ProMax
Xylenes	0.00			5.74E-06	2.51E-05	ProMax
n-Hexane	0.00			1.94E-05	8.51E-05	ProMax
2,2,4-Trimethylpentane	0.00			1.18E-05	5.15E-05	ProMax

*Provide your calculations as an attachment and explain how all process variables and emissions factors were selected.

Company: EOG Resources, Inc. Facility: Mary's Draw 412-1527H, Mary's Draw 411-15H
EU Type: Tank EUID: T1 (6538)

Greenhouse Gases (GHGs)

Greenhouse Gases (GHGs)						
		Efficiency Stds.				
Pollutant	Pre-Controlled Potential Emissions (tons/yr)	Potential to Emit (PTE)*	Units*	Potential to Emit (lbs/hr)*	Potential to Emit (tons/yr)*	Basis for Determination*
Carbon Dioxide	0.07			0.00	0.00	ProMax
Methane	0.10			0.00	0.00	ProMax

*Provide your calculations as an attachment and explain how all process variables and emissions factors were selected.

Process Flow Diagram:

Attach a Process Flow Diagram to this application for this emission unit.

Have you attached a process diagram? Yes

Best Available Control Technology (BACT):

Is this Emissions Unit subject to BACT? No

Was a BACT Analysis completed for this emission unit? No

Have you attached a BACT analysis? No

Pollutant(s):

Proposed BACT: Presumptive BACT

Lowest Achievable Emission Rate (LAER):

Is Emissions Unit subject to LAER? No

Was LAER Analysis completed for emission unit? No

Pollutant(s):

Proposed LAER:

Federal and State Rule Applicability:

New Source Performance Standard are listed under 40 CFR 60- Standards of Performance for New Stationary Sources.

New Source Performance Standards (NSPS): Not Affected

If applicable, list NSPS Subpart(s):

National Emissions Standards for Hazardous Air Pollutants (NESHAP Part 61) are listed under 40 CFR 61. (These include asbestos, benzene, beryllium, mercury, and vinyl chloride).

National Emission Standards for Hazardous Air Pollutants (NESHAP Part 61): Not Affected

If applicable, list Part 61 NESHAP Subpart(s):

National Emission Standards for Hazardous Air Pollutants (NESHAP Part 63) standards are listed under 40 CFR 63

National Emission Standards for Hazardous Air Pollutants (NESHAP Part 63): Not Affected

If applicable, list Part 63 NESHAP Subpart(s):

These rules are found under WAQSR Chapter 6, Section 4.

Prevention of Significant Deterioration (PSD): Not Affected

These rules are found under WAQSR Chapter 6, Section 13.

Non-Attainment New Source Review: Not Affected

Company: EOG Resources, Inc. Facility: Mary's Draw 412-1527H, Mary's Draw 411-15H
EU Type: Tank EUID: T1 (6538)

Emissions Unit Specific Information

Material Type:	Liquid		
Description of Material Stored:	Crude Oil		
Capacity:	400	Units:	barrels
Maximum Throughput:	1038	Units:	barrels/day
Maximum Hourly Throughput:	43.25	Units:	barrels/hr

Is Tank Heated?: No

Information Specific to Storage Tanks or Silos that Contain Liquids

Enter information below, if Material Type = Liquid

Operating Pressure (psig): atmospheric

Vapor Pressure of Material Stored (psig):

Control Equipment:

Does this emission unit employ emissions control equipment? Yes

Yes- fill out the applicable information below.

No- Go to Release Point Section.

Flare

Is this the only Control Equipment for this emissions unit? Yes

If > 1 control for this emissions unit, then this control equipment is:

Are other emission units vented to this control equipment? Yes

If other emission units are vented to this control equipment, List them below:

Five oil tanks, two produced water tanks, one emergency tank, and one vapor recovery tower

List all release point IDs associated with this control equipment below:

Flare

Manufacturer: Steffes

Model Name and Number: 5462146

Date Installed: 9/20/2014

Company Control Equipment ID:

Company Control Equipment Description: EOG #BE4776 12 ft. flare with 3 in/4 in diameter with pilot flame

Ignition Device: Yes

Flame Presence Sensor: Yes

Flame Presence Type: Thermocouple

Inlet Gas Temp (F): 143

Inlet Gas Flow Rate (acfm): 3674.43

Outlet Gas Temp (F): 1400

Outlet Gas Flow Rate (acfm):

Pollutants Controlled

Pollutants Controlled				
Pollutant	In Control? (yes/no)	Design Control Efficiency (%):	Capture Efficiency (%):	Operating Control Efficiency (%):
VOC - Volatile Organic Compounds	Yes	98.00%	100.00%	98.00%
HAPS - Total Combined Hazardous Air Pollutants	Yes	98.00%	100.00%	98.00%

Company: EOG Resources, Inc. Facility: Mary's Draw 412-1527H, Mary's Draw 411-15H
EU Type: Tank EUID: T1 (6538)

Horizontal or Vertical Release Point Information:

Vertical Or Horizontal Release Point 1	
Company Release Point ID:	Flare FL 1
Company Release Point Description:	Flare Stack
Release Point Type:	Vertical
For longitude and latitude, use NAD 83/WGS84 datum	
Release Point Latitude (5 digits to right of decimal pt.):	43.43606
Release Point Longitude (5 digits to right of decimal pt.):	-105.48730
Base Elevation (ft):	4780
Stack Height (ft):	12
Stack Diameter (ft):	0.25 and 0.33
Exit Gas Velocity (ft/s):	65
Exit Gas Temp (F):	1400
Exit Gas Flow Rate (acfm):	

Company: EOG Resources, Inc. Facility: Mary's Draw 412-1527H, Mary's Draw 411-15H
EU Type: Tank EUID: T2 (6539)

Emission Unit Type	Tank	Date of Application:	12/22/2014
AQD Emission Unit ID:		EU ID used by Company:	T2 (6539)
Emission Unit Description Used by Company:	Oil Storage Tank 6539 =BE 4521-400 bbl		

Emission Unit Installation or Modification Schedule- *Select reason(s) for this emissions unit being included in this application (must be completed regardless of date of installation or modification) and the date associated with the EU Installation of Modification Schedule:*

Reason: Construction (greenfield/new facility)

*If Reason = **Construction (greenfield/new facility)**, enter date contruction began:*	Date: 9/20/2014
*If Reason = **Synthetic Minor**, enter date emissions unit became new synthetic minor:*	Date:
*If Reason = **Modification**, enter modification date or date modification began:*	Date:
*If Reason = **Temporary Permit**, enter beginning date for temporary permit:*	Date:
*If Reason = **Reconstruction**, enter beginning date for reconstruction:*	Date:

If the Reason is: **Reconstruction** *or* ***Temporary Permit*** *or* **Other** *please explain below:*

*Oil and Gas Production Site **ONLY***

if Reason = **Construction (greenfield/new facility)** will production commence after permit is issued?	NO
if previous question's answer is No" (production not waiting until after permit), then provic first date of production:	Date: 9/22/2014

List in the area below any previous NSR permit numbers for air contaminant sources included in this application, if applicable, and describe the requested modification. Attach an additional sheet if necessary:

N/A

SCC Codes

Enter SCC for each process. Enter at least one SCC Code. Click to see SCC Code List

Enter SCC Code		*SCC Short Name*	Scc Level 4 Name
SCC Code 1 (Required Field):	2310011020	On-Shore Oil Production /Storage Tanks: Crude Oil	Storage Tanks: Crude Oil
SCC Code 2 (as needed):			
SCC Code 3 (as needed):			

General Emission Unit Dates

Initial Construction Commencement Date:	9/20/2014
Initial Operation Commencement Date:	9/24/2014
Most Recent Construction/ Modification Commencement Date:	
Most Recent Operation Commencement Date:	

Potential Operating Schedule:

Provide the operating schedule for this emission unit.

Hours/day:	24
Hours/year:	8760

Company: EOG Resources, Inc. Facility: Mary's Draw 412-1527H, Mary's Draw 411-15H
EU Type: Tank EUID: T2 (6539)

Criteria Pollutants

The following tables request information that is needed to determine the applicable requirements and the compliance status of this emission unit with those requirements.

Criteria Pollutants						
		Efficiency Stds.				
Pollutant	Pre-Controlled Potential Emissions (tons/yr)	Potential to Emit (PTE)*	Units*	Potential to Emit (lbs/hr)*	Potential to Emit (tons/yr)*	Basis for Determination*
Particulate emissions (PE/PM) (formerly particulate matter)						
PM =10 microns in diameter (PE/PM10)						
PM =2.5 microns in diameter (PE/PM2.5)						
Sulfur dioxide (SO2)						
Nitrogen Oxides (Nox)						
Carbon monoxide (CO)						
Volatile organic compounds (VOC)	1.96			0.01	0.04	ProMax
Lead (Pb)						
Tota Hazardous Air Pollutants (HAPs)	0.02			0.00	0.00	ProMax
Fluoride (F)						
Hydrogen Sulfide (H2S)						
Mercury (Hg)						
Total Reduced Sulfur (TRS)						
Sulfuric Acid Mist (SAM)						

*Provide your calculations as an attachment and explain how all process variables and emissions factors were selected.

Hazardous Air Pollutants (HAPs) and Toxic Air Contaminants

Hazardous Air Pollutants (HAPs) and Toxic Air Contaminants						
		Efficiency Stds.				
Pollutant	Pre-Controlled Potential Emissions (tons/yr)	Potential to Emit (PTE)*	Units*	Potential to Emit (lbs/hr)*	Potential to Emit (tons/yr)*	Basis for Determination*
Benzene	1.20E-05			5.49E-08	2.41E-07	ProMax
Toluene	0.01			4.47E-05	1.96E-04	ProMax
Ethylbenzene	0.00			2.19E-06	9.57E-06	ProMax
Xylenes	0.00			5.74E-06	2.51E-05	ProMax
n-Hexane	0.00			1.94E-05	8.51E-05	ProMax
2,2,4-Trimethylpentane	0.00			1.18E-05	5.15E-05	ProMax

*Provide your calculations as an attachment and explain how all process variables and emissions factors were selected.

Company: EOG Resources, Inc. Facility: Mary's Draw 412-1527H, Mary's Draw 411-15H
EU Type: Tank EUID: T2 (6539)

Greenhouse Gases (GHGs)

Greenhouse Gases (GHGs)						
		Efficiency Stds.				
Pollutant	Pre-Controlled Potential Emissions (tons/yr)	Potential to Emit (PTE)*	Units*	Potential to Emit (lbs/hr)*	Potential to Emit (tons/yr)*	Basis for Determination*
Carbon Dioxide	0.07			0.00	0.00	ProMax
Methane	0.10			0.00	0.00	ProMax

*Provide your calculations as an attachment and explain how all process variables and emissions factors were selected.

Process Flow Diagram:

Attach a Process Flow Diagram to this application for this emission unit.

Have you attached a process diagram? Yes

Best Available Control Technology (BACT):

Is this Emissions Unit subject to BACT? No

Was a BACT Analysis completed for this emission unit? No

Have you attached a BACT analysis? No

Pollutant(s):

Proposed BACT: Presumptive BACT

Lowest Achievable Emission Rate (LAER):

Is Emissions Unit subject to LAER? No

Was LAER Analysis completed for emission unit? No

Pollutant(s):

Proposed LAER:

Federal and State Rule Applicability:

New Source Performance Standard are listed under 40 CFR 60- Standards of Performance for New Stationary Sources.

New Source Performance Standards (NSPS): Not Affected

If applicable, list NSPS Subpart(s):

National Emissions Standards for Hazardous Air Pollutants (NESHAP Part 61) are listed under 40 CFR 61. (These include asbestos, benzene, beryllium, mercury, and vinyl chloride).

National Emission Standards for Hazardous Air Pollutants (NESHAP Part 61): Not Affected

If applicable, list Part 61 NESHAP Subpart(s):

National Emission Standards for Hazardous Air Pollutants (NESHAP Part 63) standards are listed under 40 CFR 63

National Emission Standards for Hazardous Air Pollutants (NESHAP Part 63): Not Affected

If applicable, list Part 63 NESHAP Subpart(s):

These rules are found under WAQSR Chapter 6, Section 4.

Prevention of Significant Deterioration (PSD): Not Affected

These rules are found under WAQSR Chapter 6, Section 13.

Non-Attainment New Source Review: Not Affected

Company: EOG Resources, Inc. Facility: Mary's Draw 412-1527H, Mary's Draw 411-15H
EU Type: Tank EUID: T2 (6539)

Emissions Unit Specific Information

Material Type: Liquid
Description of Material Stored: Crude Oil
Capacity: 400 Units: barrels
Maximum Throughput: 1038 Units: barrels/day
Maximum Hourly Throughput: 43.25 Units: barrels/hr

Is Tank Heated?: No

Information Specific to Storage Tanks or Silos that Contain Liquids

Enter information below, if Material Type = Liquid

Operating Pressure (psig): atmospheric
Vapor Pressure of Material Stored (psig):

Control Equipment:

Does this emission unit employ emissions control equipment? Yes

Yes- fill out the applicable information below.

No- Go to Release Point Section.

Flare

Is this the only Control Equipment for this emissions unit? Yes

If > 1 control for this emissions unit, then this control equipment is:

Are other emission units vented to this control equipment? Yes

If other emission units are vented to this control equipment, List them below:

Five oil tanks, two produced water tanks, one emergency tank, and one vapor recovery tower

List all release point IDs associated with this control equipment below

Flare

Manufacturer: Steffes
Model Name and Number: 5462146
Date Installed: 9/20/2014
Company Control Equipment ID:
Company Control Equipment Description: EOG #BE4776 12 ft. flare with 3 in/4 in diameter with pilot flame

Ignition Device: Yes

Flame Presence Sensor: Yes
Flame Presence Type: Thermocouple
Inlet Gas Temp (F): 143
Inlet Gas Flow Rate (acfm): 3674.43
Outlet Gas Temp (F): 1400
Outlet Gas Flow Rate (acfm):

Pollutants Controlled

Pollutants Controlled				
Pollutant	In Control? (yes/no)	Design Control Efficiency (%):	Capture Efficiency (%):	Operating Control Efficiency (%):
VOC - Volatile Organic Compounds	Yes	98.00%	100.00%	98.00%
HAPS - Total Combined Hazardous Air Pollutants	Yes	98.00%	100.00%	98.00%

Company: EOG Resources, Inc. Facility: Mary's Draw 412-1527H, Mary's Draw 411-15H
EU Type: Tank EUID: T2 (6539)

Horizontal or Vertical Release Point Information:

Vertical Or Horizontal Release Point 1	
Company Release Point ID:	Flare FL 1
Company Release Point Description:	Flare Stack
Release Point Type:	Vertical
For longitude and latitude, use NAD 83/WGS84 datum	
Release Point Latitude (5 digits to right of decimal pt.):	43.43606
Release Point Longitude (5 digits to right of decimal pt.):	-105.48730
Base Elevation (ft):	4780
Stack Height (ft):	12
Stack Diameter (ft):	0.25 and 0.33
Exit Gas Velocity (ft/s):	65
Exit Gas Temp (F):	1400
Exit Gas Flow Rate (acfm):	

Company: EOG Resources, Inc. Facility: Mary's Draw 412-1527H, Mary's Draw 411-15H
EU Type: Tank EUID: T3 (6540)

Emission Unit Type:	Tank	Date of Application:	12/22/2014
AQD Emission Unit ID:		EU ID used by Company:	T3 (6540)
Emission Unit Description Used by Company:	Oil Storage Tank 6540 =BE4520-400 bbl		

Emission Unit Installation or Modification Schedule-*Select reason(s) for this emissions unit being included in this application (must be completed regardless of date of installation or modification) and the date associated with the EU Installation of Modification Schedule:*

Reason: Construction (greenfield/new facility)

*If Reason = **Construction (greenfield/new facility)**, enter date construction began:*	Date:	9/20/2014
*If Reason = **Synthetic Minor**, enter date emissions unit became new synthetic minor:*	Date:	
*If Reason = **Modification**, enter modification date or date modification began:*	Date:	
*If Reason = **Temporary Permit**, enter beginning date for temporary permit:*	Date:	
*If Reason = **Reconstruction**, enter beginning date for reconstruction:*	Date:	

If the Reason is: **Reconstruction** *or* ***Temporary Permit*** *or* **Other** *please explain below:*

*Oil and Gas Production Site **ONLY***

if Reason = **Construction (greenfield/new facility)** will production commence after permit is issued?		NO
if previous question's answer is No" (production not waiting until after permit), then provide first date of production:	Date:	9/22/2014

List in the area below any previous NSR permit numbers for air contaminant sources included in this application, if applicable, and describe the requested modification. Attach an additional sheet if necessary:

N/A

SCC Codes

Enter SCC for each process. Enter at least one SCC Code. Click to see SCC Code List

Enter SCC Code		*SCC Short Name*	Scc Level 4 Name
SCC Code 1 (Required Field):	2310011020	On-Shore Oil Production /Storage Tanks: Crude Oil	Storage Tanks: Crude Oil
SCC Code 2 (as needed):			
SCC Code 3 (as needed):			

General Emission Unit Dates

Initial Construction Commencement Date:	9/20/2014
Initial Operation Commencement Date:	9/22/2014
Most Recent Construction/ Modification Commencement Date:	
Most Recent Operation Commencement Date:	

Potential Operating Schedule:

Provide the operating schedule for this emission unit.

Hours/day:	24
Hours/year:	8760

Company: EOG Resources, Inc. Facility: Mary's Draw 412-1527H, Mary's Draw 411-15H
EU Type: Tank EUID: T3 (6540)

Criteria Pollutants

The following tables request information that is needed to determine the applicable requirements and the compliance status of this emission unit with those requirements.

Criteria Pollutants						
		Efficiency Stds.				
Pollutant	Pre-Controlled Potential Emissions (tons/yr)	Potential to Emit (PTE)*	Units*	Potential to Emit (lbs/hr)*	Potential to Emit (tons/yr)*	Basis for Determination*
Particulate emissions (PE/PM) (formerly particulate matter)						
PM =10 microns in diameter (PE/PM10)						
PM =2.5 microns in diameter (PE/PM2.5)						
Sulfur dioxide (SO2)						
Nitrogen Oxides (Nox)						
Carbon monoxide (CO)						
Volatile organic compounds (VOC)	1.96			0.01	0.04	ProMax
Lead (Pb)						
Tota Hazardous Air Pollutants (HAPs)	0.02			0.00	0.00	ProMax
Fluoride (F)						
Hydrogen Sulfide (H2S)						
Mercury (Hg)						
Total Reduced Sulfur (TRS)						
Sulfuric Acid Mist (SAM)						

*Provide your calculations as an attachment and explain how all process variables and emissions factors were selected.

Hazardous Air Pollutants (HAPs) and Toxic Air Contaminants

Hazardous Air Pollutants (HAPs) and Toxic Air Contaminants						
		Efficiency Stds.				
Pollutant	Pre-Controlled Potential Emissions (tons/yr)	Potential to Emit (PTE)*	Units*	Potential to Emit (lbs/hr)*	Potential to Emit (tons/yr)*	Basis for Determination*
Benzene	1.20E-05			5.49E-08	2.41E-07	ProMax
Toluene	0.01			4.47E-05	1.96E-04	ProMax
Ethylbenzene	0.00			2.19E-06	9.57E-06	ProMax
Xylenes	0.00			5.74E-06	2.51E-05	ProMax
n-Hexane	0.00			1.94E-05	8.51E-05	ProMax
2,2,4-Trimethylpentane	0.00			1.18E-05	5.15E-05	ProMax

*Provide your calculations as an attachment and explain how all process variables and emissions factors were selected.

Company: EOG Resources, Inc. Facility: Mary's Draw 412-1527H, Mary's Draw 411-15H
EU Type: Tank EUID: T3 (6540)

Greenhouse Gases (GHGs)

Greenhouse Gases (GHGs)						
		Efficiency Stds.				
Pollutant	Pre-Controlled Potential Emissions (tons/yr)	Potential to Emit (PTE)*	Units*	Potential to Emit (lbs/hr)*	Potential to Emit (tons/yr)*	Basis for Determination*
Carbon Dioxide	0.07			0.00	0.00	ProMax
Methane	0.10			0.00	0.00	ProMax
*Provide your calculations as an attachment and explain how all process variables and emissions factors were selected.						

Process Flow Diagram:

Attach a Process Flow Diagram to this application for this emission unit.

Have you attached a process diagram? Yes

Best Available Control Technology (BACT):

Is this Emissions Unit subject to BACT? No

Was a BACT Analysis completed for this emission unit? No

Have you attached a BACT analysis? No

Pollutant(s):

Proposed BACT: Presumptive BACT

Lowest Achievable Emission Rate (LAER):

Is Emissions Unit subject to LAER? No

Was LAER Analysis completed for emission unit? No

Pollutant(s):

Proposed LAER:

Federal and State Rule Applicability:

New Source Performance Standard are listed under 40 CFR 60- Standards of Performance for New Stationary Sources.

New Source Performance Standards (NSPS): Not Affected

If applicable, list NSPS Subpart(s):

National Emissions Standards for Hazardous Air Pollutants (NESHAP Part 61) are listed under 40 CFR 61. (These include asbestos, benzene, beryllium, mercury, and vinyl chloride).

National Emission Standards for Hazardous Air Pollutants (NESHAP Part 61): Not Affected

If applicable, list Part 61 NESHAP Subpart(s):

National Emission Standards for Hazardous Air Pollutants (NESHAP Part 63) standards are listed under 40 CFR 63

National Emission Standards for Hazardous Air Pollutants (NESHAP Part 63): Not Affected

If applicable, list Part 63 NESHAP Subpart(s):

These rules are found under WAQSR Chapter 6, Section 4.

Prevention of Significant Deterioration (PSD): Not Affected

These rules are found under WAQSR Chapter 6, Section 13.

Non-Attainment New Source Review: Not Affected

Company: EOG Resources, Inc. Facility: Mary's Draw 412-1527H, Mary's Draw 411-15H
EU Type: Tank EUID: T3 (6540)

Emissions Unit Specific Information

Material Type: Liquid
Description of Material Stored: Crude Oil
Capacity: 400 Units: barrels
Maximum Throughput: 1038 Units: barrels/day
Maximum Hourly Throughput: 43.25 Units: barrels/hr

Is Tank Heated?: No

Information Specific to Storage Tanks or Silos that Contain Liquids

Enter information below, if Material Type = Liquid

Operating Pressure (psig): atmospheric
Vapor Pressure of Material Stored (psig):

Control Equipment:

Does this emission unit employ emissions control equipment? Yes

Yes- fill out the applicable information below.

No- Go to Release Point Section.

Flare

Is this the only Control Equipment for this emissions unit? Yes

If > 1 control for this emissions unit, then this control equipment is:

Are other emission units vented to this control equipment? Yes

If other emission units are vented to this control equipment, List them below:

Five oil tanks, two produced water tanks, one emergency tank, and one vapor recovery tower

List all release point IDs associated with this control equipment below

Flare

Manufacturer: Steffes
Model Name and Number: 5462146
Date Installed: 9/20/2014
Company Control Equipment ID:
Company Control Equipment Description: EOG #BE4776 12 ft. flare with 3 in/4 in diameter with pilot flame

Ignition Device: Yes

Flame Presence Sensor: Yes
Flame Presence Type: Thermocouple
Inlet Gas Temp (F): 143
Inlet Gas Flow Rate (acfm): 3674.43
Outlet Gas Temp (F): 1400
Outlet Gas Flow Rate (acfm):

Pollutants Controlled

Pollutants Controlled				
Pollutant	In Control? (yes/no)	Design Control Efficiency (%):	Capture Efficiency (%):	Operating Control Efficiency (%):
VOC - Volatile Organic Compounds	Yes	98.00%	100.00%	98.00%
HAPS - Total Combined Hazardous Air Pollutants	Yes	98.00%	100.00%	98.00%

Company: EOG Resources, Inc. Facility: Mary's Draw 412-1527H, Mary's Draw 411-15H
EU Type: Tank BUID: T3 (6540)

Horizontal or Vertical Release Point Information:

Vertical Or Horizontal Release Point 1	
Company Release Point ID:	Flare FL 1
Company Release Point Description	Flare Stack
Release Point Type	Vertical
For longitude and latitude, use NAD 83/WGS84 datum	
Release Point Latitude (5 digits to right of decimal pt.):	43.43606
Release Point Longitude (5 digits to right of decimal pt.):	-105.48730
Base Elevation (ft):	4780
Stack Height (ft):	12
Stack Diameter (ft):	0.25 and 0.33
Exit Gas Velocity (ft/s):	65
Exit Gas Temp (F):	1400
Exit Gas Flow Rate (acfm):	

Company: EOG Resources, Inc. Facility: Mary's Draw 412-1527H, Mary's Draw 411-15H
EU Type: Tank EUID: T4 (6541)

Emission Unit Type:	Tank	Date of Application:	12/22/2014
AQD Emission Unit ID:		EU ID used by Company:	T4 (6541)
Emission Unit Description Used by Company:	Oil Storage Tank 6541 =BE 4519-400 bbl		

Emission Unit Installation or Modification Schedule- *Select reason(s) for this emissions unit being included in this application (must be completed regardless of date of installation or modification) and the date associated with the EU Installation of Modification Schedule:*

Reason: Construction (greenfield/new facility)

*If Reason = **Construction (greenfield/new facility)**, enter date construction began:*	Date:	9/20/2014
*If Reason = **Synthetic Minor**, enter date emissions unit became new synthetic minor:*	Date:	
*If Reason = **Modification**, enter modification date or date modification began:*	Date:	
*If Reason = **Temporary Permit**, enter beginning date for temporary permit:*	Date:	
*If Reason = **Reconstruction**, enter beginning date for reconstruction:*	Date:	

If the Reason is: **Reconstruction** *or* ***Temporary Permit*** *or* **Other** *please explain below:*

Oil and Gas Production Site ***ONLY***

if Reason = **Construction (greenfield/new facility)** will production commence after permit is issued?		NO
if previous question's answer is No" (production not waiting until after permit), then provide first date of production:	Date:	9/22/2014

List in the area below any previous NSR permit numbers for air contaminant sources included in this application, if applicable, and describe the requested modification. Attach an additional sheet if necessary:

N/A

SCC Codes

Enter SCC for each process. Enter at least one SCC Code. Click to see SCC Code List

Enter SCC Code		*SCC Short Name*	Sce Level 4 Name
SCC Code 1 (Required Field):	2310011020	On-Shore Oil Production /Storage Tanks: Crude Oil	Storage Tanks: Crude Oil
SCC Code 2 (as needed):			
SCC Code 3 (as needed):			

General Emission Unit Dates

Initial Construction Commencement Date:	9/20/2014
Initial Operation Commencement Date:	9/22/2014
Most Recent Construction/ Modification Commencement Date:	
Most Recent Operation Commencement Date:	

Potential Operating Schedule:

Provide the operating schedule for this emission unit.

Hours/day:	24
Hours/year:	8760

Company: EOG Resources, Inc. Facility: Mary's Draw 412-1527H, Mary's Draw 411-15H
EU Type: Tank EUID: T4 (6541)

Criteria Pollutants

The following tables request information that is needed to determine the applicable requirements and the compliance status of this emission unit with those requirements.

Criteria Pollutants						
		Efficiency Stds.				
Pollutant	Pre-Controlled Potential Emissions (tons/yr)	Potential to Emit (PTE)*	Units*	Potential to Emit (lbs/hr)*	Potential to Emit (tons/yr)*	Basis for Determinatio n*
Particulate emissions (PE/PM) (formerly particulate matter)						
PM =10 microns in diameter (PE/PM10)						
PM =2.5 microns in diameter (PE/PM2.5)						
Sulfur dioxide (SO2)						
Nitrogen Oxides (Nox)						
Carbon monoxide (CO)						
Volatile organic compounds (VOC)	1.96			0.01	0.04	ProMax
Lead (Pb)						
Tota Hazardous Air Pollutants (HAPs)	0.02			0.00	0.00	ProMax
Fluoride (F)						
Hydrogen Sulfide (H2S)						
Mercury (Hg)						
Total Reduced Sulfur (TRS)						
Sulfuric Acid Mist (SAM)						

*Provide your calculations as an attachment and explain how all process variables and emissions factors were selected.

Hazardous Air Pollutants (HAPs) and Toxic Air Contaminants

Hazardous Air Pollutants (HAPs) and Toxic Air Contaminants						
		Efficiency Stds.				
Pollutant	Pre-Controlled Potential Emissions (tons/yr)	Potential to Emit (PTE)*	Units*	Potential to Emit (lbs/hr)*	Potential to Emit (tons/yr)*	Basis for Determinatio n*
Benzene	1.20E-05			5.49E-08	2.41E-07	ProMax
Toluene	0.01			4.47E-05	1.96E-04	ProMax
Ethylbenzene	0.00			2.19E-06	9.57E-06	ProMax
Xylenes	0.00			5.74E-06	2.51E-05	ProMax
n-Hexane	0.00			1.94E-05	8.51E-05	ProMax
2,2,4-Trimethylpentane	0.00			1.18E-05	5.15E-05	ProMax

*Provide your calculations as an attachment and explain how all process variables and emissions factors were selected.

Greenhouse Gases (GHGs)

Greenhouse Gases (GHGs)						
		Efficiency Stds.				
Pollutant	Pre-Controlled Potential Emissions (tons/yr)	Potential to Emit (PTE)*	Units*	Potential to Emit (lbs/hr)*	Potential to Emit (tons/yr)*	Basis for Determination*
Carbon Dioxide	0.07			0.00	0.00	ProMax
Methane	0.10			0.00	0.00	ProMax

*Provide your calculations as an attachment and explain how all process variables and emissions factors were selected.

Process Flow Diagram:

Attach a Process Flow Diagram to this application for this emission unit.

Have you attached a process diagram? Yes

Best Available Control Technology (BACT):

Is this Emissions Unit subject to BACT? No

Was a BACT Analysis completed for this emission unit? No

Have you attached a BACT analysis? No

Pollutant(s):

Proposed BACT: Presumptive BACT

Lowest Achievable Emission Rate (LAER):

Is Emissions Unit subject to LAER? No

Was LAER Analysis completed for emission unit? No

Pollutant(s):

Proposed LAER:

Federal and State Rule Applicability:

New Source Performance Standard are listed under 40 CFR 60- Standards of Performance for New Stationary Sources.

New Source Performance Standards (NSPS): Not Affected

If applicable, list NSPS Subpart(s):

National Emissions Standards for Hazardous Air Pollutants (NESHAP Part 61) are listed under 40 CFR 61. (These include asbestos, benzene, beryllium, mercury, and vinyl chloride).

National Emission Standards for Hazardous Air Pollutants (NESHAP Part 61): Not Affected

If applicable, list Part 61 NESHAP Subpart(s):

National Emission Standards for Hazardous Air Pollutants (NESHAP Part 63) standards are listed under 40 CFR 63

National Emission Standards for Hazardous Air Pollutants (NESHAP Part 63): Not Affected

If applicable, list Part 63 NESHAP Subpart(s):

These rules are found under WAQSR Chapter 6, Section 4.

Prevention of Significant Deterioration (PSD): Not Affected

These rules are found under WAQSR Chapter 6, Section 13.

Non-Attainment New Source Review: Not Affected

Company: EOG Resources, Inc. Facility: Mary's Draw 412-1527H, Mary's Draw 411-15H
EU Type; Tank BUID; T4 (6541)

Emissions Unit Specific Information

Material Type: Liquid
Description of Material Stored: Produced Water
Capacity: 400 Units: barrels
Maximum Throughput: 1038 Units: barrels/day
Maximum Hourly Throughput: 43.25 Units: barrels/hr

Is Tank Heated?: No

Information Specific to Storage Tanks or Silos that Contain Liquids

Enter information below, if Material Type = Liquid

Operating Pressure (psig): atmospheric
Vapor Pressure of Material Stored (psig):

Control Equipment:

Does this emission unit employ emissions control equipment? Yes

Yes- fill out the applicable information below.

No- Go to Release Point Section.

Flare

Is this the only Control Equipment for this emissions unit? Yes

If > 1 control for this emissions unit, then this control equipment is:

Are other emission units vented to this control equipment? Yes

If other emission units are vented to this control equipment, List them below:

Five oil tanks, two produced water tanks, one emergency tank, and one vapor recovery tower

List all release point IDs associated with this control equipment below:

Flare

Manufacturer: Steffes
Model Name and Number: 5462146
Date Installed: 9/20/2014
Company Control Equipment ID:
Company Control Equipment Description: EOG #BE4776 12 ft. flare with 3 in/4 in diameter with pilot flame

Ignition Device: Yes

Flame Presence Sensor: Yes
Flame Presence Type: Thermocouple
Inlet Gas Temp (F): 143
Inlet Gas Flow Rate (acfm): 3674.43
Outlet Gas Temp (F): 1400
Outlet Gas Flow Rate (acfm):

Pollutants Controlled

Pollutants Controlled				
Pollutant	In Control? (yes/no)	Design Control Efficiency (%):	Capture Efficiency (%):	Operating Control Efficiency (%):
VOC - Volatile Organic Compounds	Yes	98.00%	100.00%	98.00%
HAPS - Total Combined Hazardous Air Pollutants	Yes	98.00%	100.00%	98.00%

Company: EOG Resources, Inc. Facility: Mary's Draw 412-1527H, Mary's Draw 411-15H
EU Type: Tank EUID: T4 (6541)

Horizontal or Vertical Release Point Information:

Vertical Or Horizontal Release Point 1	
Company Release Point ID:	Flare FL 1
Company Release Point Description:	Flare Stack
Release Point Type:	Vertical
For longitude and latitude, use NAD 83/WGS84 datum	
Release Point Latitude (5 digits to right of decimal pt.):	43.43606
Release Point Longitude (5 digits to right of decimal pt.):	-105.48730
Base Elevation (ft):	4780
Stack Height (ft):	12
Stack Diameter (ft):	0.25 and 0.33
Exit Gas Velocity (ft/s):	65
Exit Gas Temp (F):	1400
Exit Gas Flow Rate (acfm):	

Company: EOG Resources, Inc. Facility: Mary's Draw 412-1527H, Mary's Draw 411-15H
EU Type: Tank EUID: T5 (6542)

Emission Unit Type:	Tank	Date of Application:	12/22/2014
AQD Emission Unit ID:		EU ID used by Company:	T5 (6542)
Emission Unit Description Used by Company:	Oil Storage Tank 6542 =BE 4518-400 bbl		

Emission Unit Installation or Modification Schedule- *Select reason(s) for this emissions unit being included in this application (must be completed regardless of date of installation or modification) and the date associated with the EU Installation of Modification Schedule:*

Reason: Construction (greenfield/new facility)

*If Reason = **Construction (greenfield/new facility)**, enter date contruction began:*	Date:	9/20/2014
*If Reason = **Synthetic Minor**, enter date emissions unit became new synthetic minor:*	Date:	
*If Reason = **Modification**, enter modification date or date modification began:*	Date:	
*If Reason = **Temporary Permit**, enter beginning date for temporary permit:*	Date:	
*If Reason = **Reconstruction**, enter beginning date for reconstruction:*	Date:	

If the Reason is: **Reconstruction** *or* ***Temporary Permit*** *or* **Other** *please explain below:*

*Oil and Gas Production Site **ONLY***

if Reason = **Construction (greenfield/new facility)** will production commence after permit is issued?		NO
if previous question's answer is No" (production not waiting until after permit), then provide first date of production:	Date:	9/22/2014

List in the area below any previous NSR permit numbers for air contaminant sources included in this application, if applicable, and describe the requested modification. Attach an additional sheet if necessary:

N/A

SCC Codes

Enter SCC for each process. Enter at least one SCC Code. Click to see SCC Code List

Enter SCC Code		*SCC Short Name*	Sec Level 4 Name
SCC Code 1 (Required Field):	2310011020	On-Shore Oil Production /Storage Tanks: Crude Oil	Storage Tanks: Crude Oil
SCC Code 2 (as needed):			
SCC Code 3 (as needed):			

General Emission Unit Dates

Initial Construction Commencement Date:	9/20/2014
Initial Operation Commencement Date:	9/22/2014
Most Recent Construction/ Modification Commencement Date:	
Most Recent Operation Commencement Date:	

Potential Operating Schedule:

Provide the operating schedule for this emission unit.

Hours/day:	24
Hours/year:	8760

Company: EOG Resources, Inc. Facility: Mary's Draw 412-1527H, Mary's Draw 411-15H
EU Type: Tank EUID: T5 (6542)

Criteria Pollutants

The following tables request information that is needed to determine the applicable requirements and the compliance status of this emission unit with those requirements.

Criteria Pollutants						
		Efficiency Stds.				
Pollutant	Pre-Controlled Potential Emissions (tons/yr)	Potential to Emit (PTE)*	Units*	Potential to Emit (lbs/hr)*	Potential to Emit (tons/yr)*	Basis for Determination *
Particulate emissions (PE/PM) (formerly particulate matter)						
PM =10 microns in diameter (PE/PM10)						
PM =2.5 microns in diameter (PE/PM2.5)						
Sulfur dioxide (SO2)						
Nitrogen Oxides (Nox)						
Carbon monoxide (CO)						
Volatile organic compounds (VOC)	1.96			0.01	0.04	ProMax
Lead (Pb)						
Tota Hazardous Air Pollutants (HAPs)	0.02			0.00	0.00	ProMax
Fluoride (F)						
Hydrogen Sulfide (H2S)						
Mercury (Hg)						
Total Reduced Sulfur (TRS)						
Sulfuric Acid Mist (SAM)						

*Provide your calculations as an attachment and explain how all process variables and emissions factors were selected.

Hazardous Air Pollutants (HAPs) and Toxic Air Contaminants

Hazardous Air Pollutants (HAPs) and Toxic Air Contaminants						
		Efficiency Stds.				
Pollutant	Pre-Controlled Potential Emissions (tons/yr)	Potential to Emit (PTE)*	Units*	Potential to Emit (lbs/hr)*	Potential to Emit (tons/yr)*	Basis for Determination *
Benzene	1.20E-05			5.49E-08	2.41E-07	ProMax
Toluene	0.01			4.47E-05	1.96E-04	ProMax
Ethylbenzene	0.00			2.19E-06	9.57E-06	ProMax
Xylenes	0.00			5.74E-06	2.51E-05	ProMax
n-Hexane	0.00			1.94E-05	8.51E-05	ProMax
2,2,4-Trimethylpentane	0.00			1.18E-05	5.15E-05	ProMax

*Provide your calculations as an attachment and explain how all process variables and emissions factors were selected.

Company: BOG Resources, Inc. Facility: Mary's Draw 412-1527H, Mary's Draw 411-15H
EU Type: Tank EUID: T5 (6542)

Greenhouse Gases (GHGs)

Greenhouse Gases (GHGs)						
		Efficiency Stds.				
Pollutant	Pre-Controlled Potential Emissions (tons/yr)	Potential to Emit (PTE)*	Units*	Potential to Emit (lbs/hr)*	Potential to Emit (tons/yr)*	Basis for Determination *
Carbon Dioxide	0.07			0.00	0.00	ProMax
Methane	0.10			0.00	0.00	ProMax
*Provide your calculations as an attachment and explain how all process variables and emissions factors were selected.						

Process Flow Diagram:

Attach a Process Flow Diagram to this application for this emission unit.

Have you attached a process diagram? Yes

Best Available Control Technology (BACT):

Is this Emissions Unit subject to BACT? No

Was a BACT Analysis completed for this emission unit? No

Have you attached a BACT analysis? No

Pollutant(s):

Proposed BACT: Presumptive BACT

Lowest Achievable Emission Rate (LAER):

Is Emissions Unit subject to LAER? No

Was LAER Analysis completed for emission unit? No

Pollutant(s):

Proposed LAER:

Federal and State Rule Applicability:

New Source Performance Standard are listed under 40 CFR 60- Standards of Performance for New Stationary Sources.

New Source Performance Standards (NSPS): Not Affected

If applicable, list NSPS Subpart(s):

National Emissions Standards for Hazardous Air Pollutants (NESHAP Part 61) are listed under 40 CFR 61. (These include asbestos, benzene, beryllium, mercury, and vinyl chloride).

National Emission Standards for Hazardous Air Pollutants (NESHAP Part 61): Not Affected

If applicable, list Part 61 NESHAP Subpart(s):

National Emission Standards for Hazardous Air Pollutants (NESHAP Part 63) standards are listed under 40 CFR 63

National Emission Standards for Hazardous Air Pollutants (NESHAP Part 63): Not Affected

If applicable, list Part 63 NESHAP Subpart(s):

These rules are found under WAQSR Chapter 6, Section 4.

Prevention of Significant Deterioration (PSD): Not Affected

These rules are found under WAQSR Chapter 6, Section 13.

Non-Attainment New Source Review: Not Affected

Company: EOG Resources, Inc. Facility: Mary's Draw 412-1527H, Mary's Draw 411-15H
EU Type: Tank EUID: T5 (6542)

Emissions Unit Specific Information

Material Type: Liquid
Description of Material Stored: Crude Oil
Capacity: 400 Units: barrels
Maximum Throughput: 1038 Units: barrels/day
Maximum Hourly Throughput: 43.25 Units: barrels/hr

Is Tank Heated?: No

Information Specific to Storage Tanks or Silos that Contain Liquids

Enter information below, if Material Type = Liquid

Operating Pressure (psig): atmospheric
Vapor Pressure of Material Stored (psig):

Control Equipment:

Does this emission unit employ emissions control equipment? Yes

Yes- fill out the applicable information below.

No- Go to Release Point Section.

Flare

Is this the only Control Equipment for this emissions unit? Yes

If > 1 control for this emissions unit, then this control equipment is:

Are other emission units vented to this control equipment? Yes

If other emission units are vented to this control equipment, List them below:

Five oil tanks, two produced water tanks, one emergency tank, and one vapor recovery tower

List all release point IDs associated with this control equipment below:

Flare

Manufacturer: Steffes
Model Name and Number: 5462146
Date Installed: 9/20/2014
Company Control Equipment ID:
Company Control Equipment Description: EOG #BE4776 12 ft. flare with 3 in/4 in diameter with pilot flame

Ignition Device: Yes

Flame Presence Sensor: Yes
Flame Presence Type: Thermocouple
Inlet Gas Temp (F): 143
Inlet Gas Flow Rate (acfm): 3674.43
Outlet Gas Temp (F): 1400
Outlet Gas Flow Rate (acfm):

Pollutants Controlled

Pollutants Controlled				
Pollutant	In Control? (yes/no)	Design Control Efficiency (%):	Capture Efficiency (%):	Operating Control Efficiency (%):
VOC - Volatile Organic Compounds	Yes	98.00%	100.00%	98.00%
HAPS - Total Combined Hazardous Air Pollutants	Yes	98.00%	100.00%	98.00%

Company: EOG Resources, Inc. Facility: Mary's Draw 412-1527H, Mary's Draw 411-15H
EU Type: Tank EUID: T5 (6542)

Horizontal or Vertical Release Point Information:

Vertical Or Horizontal Release Point 1	
Company Release Point ID:	Flare FL 1
Company Release Point Description:	Flare Stack
Release Point Type:	Vertical
For longitude and latitude, use NAD 83/WGS84 datum	
Release Point Latitude (5 digits to right of decimal pt.):	43.43606
Release Point Longitude (5 digits to right of decimal pt.):	-105.48730
Base Elevation (ft):	4780
Stack Height (ft):	12
Stack Diameter (ft):	0.25 and 0.33
Exit Gas Velocity (ft/s):	65
Exit Gas Temp (F):	1400
Exit Gas Flow Rate (acfm):	

Company: EOG Resources, Inc. Facility: Mary's Draw 412-1527H, Mary's Draw 411-15H
EU Type: Tank EUID: T6 (W0590)

Emission Unit Type:	Tank	Date of Application:	12/22/2014
AQD Emission Unit ID:		BU ID used by Company:	T6 (W0590)
Emission Unit Description Used by Company:	Produced Water Tank W0590-#AB0344-400 bbl		

Emission Unit Installation or Modification Schedule- *Select reason(s) for this emissions unit being included in this application (must be completed regardless of date of installation or modification) and the date associated with the EU Installation of Modification Schedule:*

Reason: Construction (greenfield/new facility)

*If Reason = **Construction (greenfield/new facility)**, enter date contruction began:*	Date: 9/20/2014
*If Reason = **Synthetic Minor**, enter date emissions unit became new synthetic minor:*	Date:
*If Reason = **Modification**, enter modification date or date modification began:*	Date:
*If Reason = **Temporary Permit**, enter beginning date for temporary permit:*	Date:
*If Reason = **Reconstruction**, enter beginning date for reconstruction:*	Date:

If the Reason is: **Reconstruction** *or* ***Temporary Permit*** *or* **Other** *please explain below:*

*Oil and Gas Production Site **ONLY***

if Reason = **Construction (greenfield/new facility)** will production commence after permit is issued?	NO
if previous question's answer is No" (production not waiting until after permit), then provide first date of production:	Date: 9/22/2014

List in the area below any previous NSR permit numbers for air contaminant sources included in this application, if applicable, and describe the requested modification. Attach an additional sheet if necessary:

N/A

SCC Codes

Enter SCC for each process. Enter at least one SCC Code. Click to see SCC Code List

Enter SCC Code		*SCC Short Name*	Scc Level 4 Name
SCC Code 1 (Required Field):	2310000550	Oil & Gas Expl & Prod /All Processes /Produced Water	Produced Water
SCC Code 2 (as needed):			
SCC Code 3 (as needed):			

General Emission Unit Dates

Initial Construction Commencement Date:	9/20/2014
Initial Operation Commencement Date:	9/22/2014
Most Recent Construction/ Modification Commencement Date:	
Most Recent Operation Commencement Date:	

Potential Operating Schedule:

Provide the operating schedule for this emission unit.

Hours/day:	24
Hours/year:	8760

Company: BOG Resources, Inc. Facility: Mary's Draw 412-1527H, Mary's Draw 411-15H
EU Type: Tank EUID: T6 (W0590)

Criteria Pollutants

The following tables request information that is needed to determine the applicable requirements and the compliance status of this emission unit with those requirements.

Criteria Pollutants						
		Efficiency Stds.				
Pollutant	Pre-Controlled Potential Emissions (tons/yr)	Potential to Emit (PTE)*	Units*	Potential to Emit (lbs/hr)*	Potential to Emit (tons/yr)*	Basis for Determination *
Particulate emissions (PE/PM) (formerly particulate matter)						
PM #10 microns in diameter (PE/PM10)						
PM #2.5 microns in diameter (PE/PM2.5)						
Sulfur dioxide (SO2)						
Nitrogen Oxides (Nox)						
Carbon monoxide (CO)						
Volatile organic compounds (VOC)	0.73			0.00	0.01	ProMax
Lead (Pb)						
Tota Hazardous Air Pollutants (HAPs)	0.03			0.00	0.00	ProMax
Fluoride (F)						
Hydrogen Sulfide (H2S)						
Mercury (Hg)						
Total Reduced Sulfur (TRS)						
Sulfuric Acid Mist (SAM)						

*Provide your calculations as an attachment and explain how all process variables and emissions factors were selected.

Hazardous Air Pollutants (HAPs) and Toxic Air Contaminants

Hazardous Air Pollutants (HAPs) and Toxic Air Contaminants						
		Efficiency Stds.				
Pollutant	Pre-Controlled Potential Emissions (tons/yr)	Potential to Emit (PTE)*	Units*	Potential to Emit (lbs/hr)*	Potential to Emit (tons/yr)*	Basis for Determination *
Benzene	3.86E-06			1.76E-08	7.72E-08	ProMax
Toluene	1.86E-02			8.51E-05	3.73E-04	ProMax
Ethylbenzene	1.17E-03			5.36E-06	2.35E-05	ProMax
Xylenes	2.80E-03			1.28E-05	5.61E-05	ProMax
n-Hexane	1.13E-02			5.17E-05	2.26E-04	ProMax
2,2,4-Trimethylpentane	1.53E-04			6.99E-07	3.06E-06	ProMax

*Provide your calculations as an attachment and explain how all process variables and emissions factors were selected.

Company: EOG Resources, Inc. Facility: Mary's Draw 412-1527H, Mary's Draw 411-15H
EU Type: Tank EUID: T6 (W0590)

Greenhouse Gases (GHGs)

Greenhouse Gases (GHGs)						
		Efficiency Stds.				
Pollutant	Pre-Controlled Potential Emissions (tons/yr)	Potential to Emit (PTE)*	Units*	Potential to Emit (lbs/hr)*	Potential to Emit (tons/yr)*	Basis for Determination *
Carbon Dioxide	0.36			0.00	0.01	ProMax
Methane	1.02			0.00	0.02	ProMax
*Provide your calculations as an attachment and explain how all process variables and emissions factors were selected.						

Process Flow Diagram:

Attach a Process Flow Diagram to this application for this emission unit.

Have you attached a process diagram? Yes

Best Available Control Technology (BACT):

Is this Emissions Unit subject to BACT? No

Was a BACT Analysis completed for this emission unit? No

Have you attached a BACT analysis? No

Pollutant(s):

Proposed BACT: Presumptive BACT

Lowest Achievable Emission Rate (LAER):

Is Emissions Unit subject to LAER? No

Was LAER Analysis completed for emission unit? No

Pollutant(s):

Proposed LAER:

Federal and State Rule Applicability:

New Source Performance Standard are listed under 40 CFR 60- Standards of Performance for New Stationary Sources.

New Source Performance Standards (NSPS): Not Affected

If applicable, list NSPS Subpart(s):

National Emissions Standards for Hazardous Air Pollutants (NESHAP Part 61) are listed under 40 CFR 61. (These include asbestos, benzene, beryllium, mercury, and vinyl chloride).

National Emission Standards for Hazardous Air Pollutants (NESHAP Part 61): Not Affected

If applicable, list Part 61 NESHAP Subpart(s):

National Emission Standards for Hazardous Air Pollutants (NESHAP Part 63) standards are listed under 40 CFR 63

National Emission Standards for Hazardous Air Pollutants (NESHAP Part 63): Not Affected

If applicable, list Part 63 NESHAP Subpart(s):

These rules are found under WAQSR Chapter 6, Section 4.

Prevention of Significant Deterioration (PSD): Not Affected

These rules are found under WAQSR Chapter 6, Section 13.

Non-Attainment New Source Review: Not Affected

Company: EOG Resources, Inc. Facility: Mary's Draw 412-1527H, Mary's Draw 411-15H
EU Type: Tank EUID: T6 (W0590)

Emissions Unit Specific Information

Material Type: Liquid
Description of Material Stored: Produced Water
Capacity: 400 Units: barrels
Maximum Throughput: 816.7 Units: barrels/day
Maximum Hourly Throughput: 34.0 Units: barrels/hr

Is Tank Heated?: No

Information Specific to Storage Tanks or Silos that Contain Liquids

Enter information below, if Material Type = Liquid

Operating Pressure (psig): atmospheric
Vapor Pressure of Material Stored (psig):

Control Equipment:

Does this emission unit employ emissions control equipment? Yes

Yes- fill out the applicable information below.

No- Go to Release Point Section.

Flare

Is this the only Control Equipment for this emissions unit? Yes

If > 1 control for this emissions unit, then this control equipment is:

Are other emission units vented to this control equipment? Yes

If other emission units are vented to this control equipment, List them below:

Five oil tanks, two produced water tanks, one emergency tank, and one vapor recovery tower

List all release point IDs associated with this control equipment below:

Flare

Manufacturer: Steffes
Model Name and Number: 5462146
Date Installed: 9/20/2014
Company Control Equipment ID:
Company Control Equipment Description: EOG #BE4776 12 ft. flare with 3 in/4 in diameter with pilot flame

Ignition Device: Yes

Flame Presence Sensor: Yes
Flame Presence Type: Thermocouple
Inlet Gas Temp (F): 143
Inlet Gas Flow Rate (acfm): 3674.43
Outlet Gas Temp (F): 1400
Outlet Gas Flow Rate (acfm):

Pollutants Controlled

Pollutants Controlled				
Pollutant	In Control? (yes/no)	Design Control Efficiency (%):	Capture Efficiency (%):	Operating Control Efficiency (%):
VOC - Volatile Organic Compounds	Yes	98.00%	100.00%	98.00%
HAPS - Total Combined Hazardous Air Pollutants	Yes	98.00%	100.00%	98.00%

Company: EOG Resources, Inc. Facility: Mary's Draw 412-1527H, Mary's Draw 411-15H
EU Type: Tank EUID: T6 (W0590)

Horizontal or Vertical Release Point Information:

Vertical Or Horizontal Release Point 1	
Company Release Point ID:	Flare FL 1
Company Release Point Description:	Flare Stack
Release Point Type:	Vertical
For longitude and latitude, use NAD 83/WGS84 datum	
Release Point Latitude (5 digits to right of decimal pt.):	43.43606
Release Point Longitude (5 digits to right of decimal pt.):	-105.48730
Base Elevation (ft):	4780
Stack Height (ft):	12
Stack Diameter (ft):	0.25 and 0.33
Exit Gas Velocity (ft/s):	65
Exit Gas Temp (F):	1400
Exit Gas Flow Rate (acfm):	

Company: EOG Resources, Inc. Facility: Mary's Draw 412-1527H, Mary's Draw 411-15H
EU Type: Tank EUID: T7 (W0591)

Emission Unit Type:	Tank	Date of Application:	12/22/2014
AQD Emission Unit ID:		EU ID used by Company:	T7 (W0591)
Emission Unit Description Used by Company:	Produced Water Tank W0591 #AB0035-400 bbl		

Emission Unit Installation or Modification Schedule-*Select reason(s) for this emissions unit being included in this application (must be completed regardless of date of installation or modification) and the date associated with the EU Installation of Modification Schedule:*

Reason: Construction (greenfield/new facility)

*If Reason = **Construction (greenfield/new facility)**, enter date contruction began:*	Date:	9/20/2014
*If Reason = **Synthetic Minor**, enter date emissions unit became new synthetic minor:*	Date:	
*If Reason = **Modification**, enter modification date or date modification began:*	Date:	
*If Reason = **Temporary Permit**, enter beginning date for temporary permit:*	Date:	
*If Reason = **Reconstruction**, enter beginning date for reconstruction:*	Date:	

If the Reason is: **Reconstruction** *or* ***Temporary Permit*** *or* **Other** *please explain below:*

*Oil and Gas Production Site **ONLY***

if Reason = **Construction (greenfield/new facility)** will production commence after permit is issued?		NO
if previous question's answer is No" (production not waiting until after permit), then provide first date of production:	Date:	9/22/2014

List in the area below any previous NSR permit numbers for air contaminant sources included in this application, if applicable, and describe the requested modification. Attach an additional sheet if necessary:

N/A

SCC Codes

Enter SCC for each process. Enter at least one SCC Code. Click to see SCC Code List

Enter SCC Code		*SCC Short Name*	Scc Level 4 Name
SCC Code 1 (Required Field):	2310000550	Oil & Gas Expl & Prod /All Processes /Produced Water	Produced Water
SCC Code 2 (as needed):			
SCC Code 3 (as needed):			

General Emission Unit Dates

Initial Construction Commencement Date:	9/20/2014
Initial Operation Commencement Date:	9/22/2014
Most Recent Construction/ Modification Commencement Date:	
Most Recent Operation Commencement Date:	

Potential Operating Schedule:

Provide the operating schedule for this emission unit.

Hours/day:	24
Hours/year:	8760

Company: EOG Resources, Inc. Facility: Mary's Draw 412-1527H, Mary's Draw 411-15H
EU Type: Tank EUID: T7 (W0591)

Criteria Pollutants

The following tables request information that is needed to determine the applicable requirements and the compliance status of this emission unit with those requirements.

Criteria Pollutants						
		Efficiency Stds.				
Pollutant	Pre-Controlled Potential Emissions (tons/yr)	Potential to Emit (PTE)*	Units*	Potential to Emit (lbs/hr)*	Potential to Emit (tons/yr)*	Basis for Determination *
Particulate emissions (PE/PM) (formerly particulate matter)						
PM #10 microns in diameter (PE/PM10)						
PM #2.5 microns in diameter (PE/PM2.5)						
Sulfur dioxide (SO2)						
Nitrogen Oxides (Nox)						
Carbon monoxide (CO)						
Volatile organic compounds (VOC)	0.73			0.00	0.01	ProMax
Lead (Pb)						
Tota Hazardous Air Pollutants (HAPs)	0.03			0.00	0.00	ProMax
Fluoride (F)						
Hydrogen Sulfide (H2S)						
Mercury (Hg)						
Total Reduced Sulfur (TRS)						
Sulfuric Acid Mist (SAM)						

*Provide your calculations as an attachment and explain how all process variables and emissions factors were selected.

Hazardous Air Pollutants (HAPs) and Toxic Air Contaminants

Hazardous Air Pollutants (HAPs) and Toxic Air Contaminants						
		Efficiency Stds.				
Pollutant	Pre-Controlled Potential Emissions (tons/yr)	Potential to Emit (PTE)*	Units*	Potential to Emit (lbs/hr)*	Potential to Emit (tons/yr)*	Basis for Determination * *
Benzene	3.86E-06			1.76E-08	7.72E-08	ProMax
Toluene	0.02			8.51E-05	3.73E-04	ProMax
Ethylbenzene	0.00			5.36E-06	2.35E-05	ProMax
Xylenes	0.00			1.28E-05	5.61E-05	ProMax
n-Hexane	0.01			5.17E-05	2.26E-04	ProMax
2,2,4-Trimethylpentane	0.00			6.99E-07	3.06E-06	ProMax

*Provide your calculations as an attachment and explain how all process variables and emissions factors were selected.

Company: EOG Resources, Inc. Facility: Mary's Draw 412-1527H, Mary's Draw 411-15H
EU Type: Tank EUID: T7 (W0591)

Greenhouse Gases (GHGs)

Greenhouse Gases (GHGs)						
		Efficiency Stds.				
Pollutant	Pre-Controlled Potential Emissions (tons/yr)	Potential to Emit (PTE)*	Units*	Potential to Emit (lbs/hr)*	Potential to Emit (tons/yr)*	Basis for Determination *
Carbon Dioxide	0.36			0.00	0.01	ProMax
Methane	1.02			0.00	0.02	ProMax

*Provide your calculations as an attachment and explain how all process variables and emissions factors were selected.

Process Flow Diagram:

Attach a Process Flow Diagram to this application for this emission unit.

Have you attached a process diagram? Yes

Best Available Control Technology (BACT):

Is this Emissions Unit subject to BACT? No

Was a BACT Analysis completed for this emission unit? No

Have you attached a BACT analysis? No

Pollutant(s):

Proposed BACT: Presumptive BACT

Lowest Achievable Emission Rate (LAER):

Is Emissions Unit subject to LAER? No

Was LAER Analysis completed for emission unit? No

Pollutant(s):

Proposed LAER:

Federal and State Rule Applicability:

New Source Performance Standard are listed under 40 CFR 60- Standards of Performance for New Stationary Sources.

New Source Performance Standards (NSPS): Not Affected

If applicable, list NSPS Subpart(s):

National Emissions Standards for Hazardous Air Pollutants (NESHAP Part 61) are listed under 40 CFR 61. (These include asbestos, benzene, beryllium, mercury, and vinyl chloride).

National Emission Standards for Hazardous Air Pollutants (NESHAP Part 61): Not Affected

If applicable, list Part 61 NESHAP Subpart(s):

National Emission Standards for Hazardous Air Pollutants (NESHAP Part 63) standards are listed under 40 CFR 63

National Emission Standards for Hazardous Air Pollutants (NESHAP Part 63): Not Affected

If applicable, list Part 63 NESHAP Subpart(s):

These rules are found under WAQSR Chapter 6, Section 4.

Prevention of Significant Deterioration (PSD): Not Affected

These rules are found under WAQSR Chapter 6, Section 13.

Non-Attainment New Source Review: Not Affected

Company: EOG Resources, Inc. Facility: Mary's Draw 412-1527H, Mary's Draw 411-15H
EU Type: Tank EUID: T7 (W0591)

Emissions Unit Specific Information

Material Type: Liquid
Description of Material Stored: Produced Water
Capacity: 400 Units: barrels
Maximum Throughput: 816.7 Units: barrels/day
Maximum Hourly Throughput: 34.0 Units: barrels/hr

Is Tank Heated?: No

Information Specific to Storage Tanks or Silos that Contain Liquids

Enter information below, if Material Type = Liquid

Operating Pressure (psig): atmospheric
Vapor Pressure of Material Stored (psig):

Control Equipment:

Does this emission unit employ emissions control equipment? Yes

Yes- fill out the applicable information below.

No- Go to Release Point Section.

Flare

Is this the only Control Equipment for this emissions unit? Yes

If> 1 control for this emissions unit, then this control equipment is:

Are other emission units vented to this control equipment? Yes

If other emission units are vented to this control equipment, List them below:

Five oil tanks, two produced water tanks, one emergency tank, and one vapor recovery tower

List all release point IDs associated with this control equipment below:

Flare

Manufacturer: Steffes
Model Name and Number: 5462146
Date Installed: 9/20/2014
Company Control Equipment ID:
Company Control Equipment Description: EOG #BE4776 12 ft. flare with 3 in/4 in diameter with pilot flame

Ignition Device: Yes

Flame Presence Sensor: Yes
Flame Presence Type: Thermocouple
Inlet Gas Temp (F): 143
Inlet Gas Flow Rate (acfm): 3674.43
Outlet Gas Temp (F): 1400
Outlet Gas Flow Rate (acfm):

Pollutants Controlled

Pollutants Controlled				
Pollutant	In Control? (yes/no)	Design Control Efficiency (%):	Capture Efficiency (%):	Operating Control Efficiency (%):
VOC - Volatile Organic Compounds	Yes	98.00%	100.00%	98.00%
HAPS - Total Combined Hazardous Air Pollutants	Yes	98.00%	100.00%	98.00%

Company: EOG Resources, Inc. Facility: Mary's Draw 412-1527H, Mary's Draw 411-15H
EU Type: Tank BUID: T7 (W0591)

Horizontal or Vertical Release Point Information:

Vertical Or Horizontal Release Point 1	
Company Release Point ID:	Flare FL 1
Company Release Point Description:	Flare Stack
Release Point Type:	Vertical
For longitude and latitude, use NAD 83/WGS84 datum	
Release Point Latitude (5 digits to right of decimal pt.):	43.43606
Release Point Longitude (5 digits to right of decimal pt.):	-105.48730
Base Elevation (ft):	4780
Stack Height (ft):	12
Stack Diameter (ft):	0.25 and 0.33
Exit Gas Velocity (ft/s):	65
Exit Gas Temp (F):	1400
Exit Gas Flow Rate (acfm):	

Company: BOG Resources, Inc. Facility: Mary's Draw 412-1527H, Mary's Draw 411-15H
EU Type: Flare EUID: FL2

Emission Unit Type: Flare
Date of Application: 12/22/2014
AQD Emission Unit ID:
EU ID used by Company: FL2
Emission Unit Description Used by Company:
Flare BOG# BE 4776

Emission Unit Installation or Modification Schedule-*Select reason(s) for this emissions unit being included in this application (must be completed regardless of date of installation or modification) and the date associated with the EU Installation of Modification Schedule:*

Reason: Construction (greenfield/new facility)

If Reason = ***Construction (greenfield/new facility)****, enter date construction began:*	Date: 9/20/2014
If Reason = ***Synthetic Minor****, enter date emissions unit became new synthetic minor:*	Date:
If Reason = ***Modification****, enter modification date or date modification began:*	Date:
If Reason = ***Temporary Permit****, enter beginning date for temporary permit:*	Date:
If Reason = ***Reconstruction****, enter beginning date for reconstruction:*	Date:

If the Reason is: **Reconstruction** *or* ***Temporary Permit*** *or* **Other** *please explain below:*

Oil and Gas Production Site ***ONLY***

if Reason = **Construction (greenfield/new facility)** will production commence after permit is issued?	NO
if previous question's answer is No* (production not waiting until after permit), then provide first date of production:	Date: 9/22/2014

List in the area below any previous NSR permit numbers for air contaminant sources included in this application, if applicable, and describe the requested modification. Attach an additional sheet if necessary:

N/A

SCC Codes

Enter SCC for each process. Enter at least one SCC Code. Click to see SCC Code List

Enter SCC Code		*SCC Short Name*	**See Level 4 Name**
SCC Code 1 (Required Field):	31000160	Crude Oil Production /Flares	Flares
SCC Code 2 (as needed):			
SCC Code 3 (as needed):			

General Emission Unit Dates

Initial Construction Commencement Date: 9/20/2014
Initial Operation Commencement Date: 9/22/2014
Most Recent Construction/ Modification Commencement Date:
Most Recent Operation Commencement Date:

Potential Operating Schedule:

Provide the operating schedule for this emission unit.

Hours/day: 24
Hours/year: 8760

Company: EOG Resources, Inc. Facility: Mary's Draw 412-1527H, Mary's Draw 411-15H
EU Type: Flare EUID: FL2

Criteria Pollutants

The following tables request information that is needed to determine the applicable requirements and the compliance status of this emission unit with those requirements.

Criteria Pollutants						
		Efficiency Stds.				
Pollutant	Pre-Controlled Potential Emissions (tons/yr)	Potential to Emit (PTE)*	Units*	Potential to Emit (lbs/hr)*	Potential to Emit (tons/yr)*	Basis for Determinatio n*
Particulate emissions (PE/PM) (formerly particulate matter)						
PM #10 microns in diameter (PE/PM10)						
PM #2.5 microns in diameter (PE/PM2.5)						
Sulfur dioxide (SO2)						
Nitrogen Oxides (Nox)	7.63			1.74	7.63	AP-42
Carbon monoxide (CO)	1.91			0.44	1.91	AP-42
Volatile organic compounds (VOC)	Note 1 (see below)			Note 1 (see below)	Note 1 (see below)	
Lead (Pb)						
Toin Hazardous Air Pollutants (HAPs)	Note 1 (see below)			Note 1 (see below)	Note 1 (see below)	
Fluoride (F)						
Hydrogen Sulfide (H2S)						
Mercury (Hg)						
Total Reduced Sulfur (TRS)						
Sulfuric Acid Mist (SAM)						

*Provide your calculations as an attachment and explain how all process variables and emissions factors were selected.

Note 1: The VOC and HAP emissions from the flare are accounted for in the crude oil and produced water tanks, VRT, and Truck Loading Operations

Hazardous Air Pollutants (HAPs) and Toxic Air Contaminants

Hazardous Air Pollutants (HAPs) and Toxic Air Contaminants						
		Efficiency Stds.				
Pollutant	Pre-Controlled Potential Emissions (tons/yr)	Potential to Emit (PTE)*	Units*	Potential to Emit (lbs/hr)*	Potential to Emit (tons/yr)*	Basis for Determinatio n*
Benzene				0.00	0.00	Mass Balance
Toluene				0.01	0.02	Mass Balance
Ethylbenzene				0.02	0.08	Mass Balance
Xylenes				0.00	0.00	Mass Balance
n-Hexane				0.06	0.26	Mass Balance
2,2,4-Trimethylpentane				0.02	0.08	Mass Balance

*Provide your calculations as an attachment and explain how all process variables and emissions factors were selected.

Greenhouse Gases (GHGs)

Greenhouse Gases (GHGs)						
		Efficiency Stds.				
Pollutant	Pre-Controlled Potential Emissions (tons/yr)	Potential to Emit (PTE)*	Units*	Potential to Emit (lbs/hr)*	Potential to Emit (tons/yr)*	Basis for Determinatio n*
Carbon Dioxide	13989.62			3193.98	13989.62	40 CFR 98.233(v) Eqn W-36
Methane	0.00			0.00	0.00	40 CFR 98.233(v) Eqn W-36

*Provide your calculations as an attachment and explain how all process variables and emissions factors were selected.

Company: EOG Resources, Inc. Facility: Mary's Draw 412-1527H, Mary's Draw 411-15H
EU Type: Flare BUID: FL2

Process Flow Diagram:

Attach a Process Flow Diagram to this application for this emission unit.

Have you attached a process diagram? Yes

Best Available Control Technology (BACT):

Is this Emissions Unit subject to BACT? No

Was a BACT Analysis completed for this emission unit? No

Have you attached a BACT analysis? No

Pollutant(s):

Proposed BACT:

Lowest Achievable Emission Rate (LAER):

Is Emissions Unit subject to LAER? No

Was LAER Analysis completed for emission unit? No

Pollutant(s):

Proposed LAER:

Federal and State Rule Applicability:

New Source Performance Standard are listed under 40 CFR 60- Standards of Performance for New Stationary Sources.

New Source Performance Standards (NSPS): Not Affected

If applicable, list NSPS Subpart(s):

National Emissions Standards for Hazardous Air Pollutants (NESHAP Part 61) are listed under 40 CFR 61. (These include asbestos, benzene, beryllium, mercury, and vinyl chloride).

National Emission Standards for Hazardous Air Pollutants (NESHAP Part 61): Not Affected

If applicable, list Part 61 NESHAP Subpart(s):

National Emission Standards for Hazardous Air Pollutants (NESHAP Part 63) standards are listed under 40 CFR 63

National Emission Standards for Hazardous Air Pollutants (NESHAP Part 63): Not Affected

If applicable, list Part 63 NESHAP Subpart(s):

These rules are found under WAQSR Chapter 6, Section 4.

Prevention of Significant Deterioration (PSD): Not Affected

These rules are found under WAQSR Chapter 6, Section 13.

Non-Attainment New Source Review: Not Affected

Emissions Unit Specific Information

Maximum Design Capacity (MMscf/hr):

Minimum Design Capacity (MMscf/hr):

Pilot Gas Volume (scf/min): 0.14

Emergency Flare Only: No

Ignition Device Type: Pilot

Smokeless Design: Yes

Btu Content (Btu/scf): 2437.34

Assist Gas Utilized? No

Waste Gas Volume: 2777 Units: scf/hr

Installation Date: 9/20/2014

Continuously Monitored? No

Company: EOG Resources, Inc. Facility: Mary's Draw 412-1527H, Mary's Draw 411-15H
EU Type: Flare EUID: FL2

Control Equipment:

Does this emission unit employ emissions control equipment? No

Yes- fill out the applicable information below.

No- Go to Release Point Section.

Horizontal or Vertical Release Point Information:

Vertical Or Horizontal Release Point 1	
Company Release Point ID:	Flare EOG #BE4776
Company Release Point Description:	Stack
Release Point Type:	Vertical
For longitude and latitude, use NAD 83/WGS84 datum	
Release Point Latitude (5 digits to right of decimal pt.):	43.43606
Release Point Longitude (5 digits to right of decimal pt.):	-105.48730
Base Elevation (ft):	4780.00000
Stack Height (ft):	12.00000
Stack Diameter (ft):	0.25 and 0.33
Exit Gas Velocity (ft/s):	65.00000
Exit Gas Temp (F):	1400.00000
Exit Gas Flow Rate (acfm):	

Company: EOG Resources, Inc. Facility: Mary's Draw 412-1527H, Mary's Draw 411-15H
EU Type: Heater EUID: LH2

Emission Unit Type:	Heater	Date of Application:	12/22/2014
AQD Emission Unit ID:		EU ID used by Company:	LH2
Emission Unit Description Used by Company:	Trace Line Heater BE 4774		

Emission Unit Installation or Modification Schedule- *Select reason(s) for this emissions unit being included in this application (must be completed regardless of date of installation or modification) and the date associated with the EU Installation of Modification Schedule:*

Reason: Construction (greenfield/new facility)

If Reason = ***Construction (greenfield/new facility)****, enter date contruction began:*	Date: 9/20/2014
If Reason = ***Synthetic Minor****, enter date emissions unit became new synthetic minor:*	Date:
If Reason = ***Modification****, enter modification date or date modification began:*	Date:
If Reason = ***Temporary Permit****, enter beginning date for temporary permit:*	Date:
If Reason = ***Reconstruction****, enter beginning date for reconstruction:*	Date:

If the Reason is: **Reconstruction** *or* ***Temporary Permit*** *or* **Other** *please explain below:*

Oil and Gas Production Site ***ONLY***

if Reason = **Construction (greenfield/new facility)** will production commence after permit is issued?	NO
if previous question's answer is No" (production not waiting until after permit), then provide first date of production:	Date: 9/22/2014

List in the area below any previous NSR permit numbers for air contaminant sources included in this application, if applicable, and describe the requested modification. Attach an additional sheet if necessary:

N/A

SCC Codes

Enter SCC for each process. Enter at least one SCC Code. Click to see SCC Code List

Enter SCC Code		*SCC Short Name*	Scc Level 4 Name
SCC Code 1 (Required Field):	2310010100	Oil & Gas Expl & Prod /Crude Petroleum /Oil Well Heaters	Oil Well Heaters
SCC Code 2 (as needed):			
SCC Code 3 (as needed):			

General Emission Unit Dates

Initial Construction Commencement Date:	9/20/2014
Initial Operation Commencement Date:	9/22/2014
Most Recent Construction/ Modification Commencement Date:	
Most Recent Operation Commencement Date:	

Potential Operating Schedule:

Provide the operating schedule for this emission unit.

Hours/day:	24
Hours/year:	8760

Company: EOG Resources, Inc. Facility: Mary's Draw 412-1527H, Mary's Draw 411-15H
EU Type: Heater EUID: LH2

Criteria Pollutants

The following tables request information that is needed to determine the applicable requirements and the compliance status of this emission unit with those requirements.

Criteria Pollutants						
		Efficiency Stds.				
Pollutant	**Pre-Controlled Potential Emissions (tons/yr)**	**Potential to Emit (PTE)***	**Units***	**Potential to Emit (lbs/hr)***	**Potential to Emit (tons/yr)***	**Basis for Determinatio n***
Particulate emissions (PE/PM) (formerly particulate matter)						
PM #10 microns in diameter (PE/PM10)						
PM #2.5 microns in diameter (PE/PM2.5)						
Sulfur dioxide (SO2)						
Nitrogen Oxides (Nox)	0.16			0.04	0.16	AP-42
Carbon monoxide (CO)	0.14			0.03	0.14	AP-42
Volatile organic compounds (VOC)	0.01			0.00	0.01	AP-42
Lead (Pb)						
Tota Hazardous Air Pollutants (HAPs)	0.00			0.00	0.00	AP-42
Fluoride (F)						
Hydrogen Sulfide (H2S)						
Mercury (Hg)						
Total Reduced Sulfur (TRS)						
Sulfuric Acid Mist (SAM)						

*Provide your calculations as an attachment and explain how all process variables and emissions factors were selected.

Company: BOG Resources, Inc. Facility: Mary's Draw 412-1527H, Mary's Draw 411-15H
EU Type: Heater EUID: LH2

Hazardous Air Pollutants (HAPs) and Toxic Air Contaminants

Hazardous Air Pollutants (HAPs) and Toxic Air Contaminants						
		Efficiency Stds.				
Pollutant	Pre-Controlled Potential Emissions (tons/yr)	Potential to Emit (PTE)*	Units*	Potential to Emit (lbs/hr)*	Potential to Emit (tons/yr)*	Basis for Determination*
Benzene	3.38E-06				3.38E-06	AP-42
Toluene	5.48E-06				5.48E-06	AP-42
Ethylbenzene	0.00				0.00	AP-42
Xylenes	0.00				0.00	AP-42
n-Hexane	2.90E-03				2.90E-03	AP-42
2,2,4-Trimethylpentane	0.00				0.00	AP-42

*Provide your calculations as an attachment and explain how all process variables and emissions factors were selected.

Greenhouse Gases (GHGs)

Greenhouse Gases (GHGs)						
		Efficiency Stds.				
Pollutant	Pre-Controlled Potential Emissions (tons/yr)	Potential to Emit (PTE)*	Units*	Potential to Emit (lbs/hr)*	Potential to Emit (tons/yr)*	Basis for Determination*
Carbon Dioxide	384.27			87.73	384.27	40 CFR 98.37 Table C-1
Methane	0.00			0.00	0.00	40 CFR 98.37 Table C-1

*Provide your calculations as an attachment and explain how all process variables and emissions factors were selected.

Company: EOG Resources, Inc. Facility: Mary's Draw 412-1527H, Mary's Draw 411-15H
EU Type: Heater EUID: LH2

Process Flow Diagram:

Attach a Process Flow Diagram to this application for this emission unit.

Have you attached a process diagram? Yes

Best Available Control Technology (BACT):

Is this Emissions Unit subject to BACT? No

Was a BACT Analysis completed for this emission unit? No

Have you attached a BACT analysis? No

Pollutant(s):

Proposed BACT:

Lowest Achievable Emission Rate (LAER):

Is Emissions Unit subject to LAER? No

Was LAER Analysis completed for emission unit? No

Pollutant(s):

Proposed LAER:

Federal and State Rule Applicability:

New Source Performance Standard are listed under 40 CFR 60- Standards of Performance for New Stationary Sources.

New Source Performance Standards (NSPS): Not Affected

If applicable, list NSPS Subpart(s):

National Emissions Standards for Hazardous Air Pollutants (NESHAP Part 61) are listed under 40 CFR 61. (These include asbestos, benzene, beryllium, mercury, and vinyl chloride).

National Emission Standards for Hazardous Air Pollutants (NESHAP Part 61): Not Affected

If applicable, list Part 61 NESHAP Subpart(s):

National Emission Standards for Hazardous Air Pollutants (NESHAP Part 63) standards are listed under 40 CFR 63

National Emission Standards for Hazardous Air Pollutants (NESHAP Part 63): Not Affected

If applicable, list Part 63 NESHAP Subpart(s):

These rules are found under WAQSR Chapter 6, Section 4.

Prevention of Significant Deterioration (PSD): Not Affected

These rules are found under WAQSR Chapter 6, Section 13.

Non-Attainment New Source Review: Not Affected

Company: EOG Resources, Inc. Facility: Mary's Draw 412-1527H, Mary's Draw 411-15H
EU Type: Heater EUID: LH2

Emissions Unit Specific Information

Firing Type: Direct
Heat Input Rating: 0.375 Units: MMBtu/hr

Primary Fuel Type: Field Gas
Secondary Fuel Type:

Heat Content of Fuel: 1354.4 Units: BTU/scf

Fuel Sulfur Content: 0 Units: ppm

Control Equipment:

Does this emission unit employ emissions control equipment? No

Yes- fill out the applicable information below.

No- Go to Release Point Section.

Fugitive Release Point Information:

Fugitive Release Point 1

Company Release Point ID: LH2

Company Release Point Description: Trace Line Heater BE 4774

Release Point Type: **Fugitive**

For longitude and latitude, use NAD 83/WGS84 datum

Release Point Latitude (5 digits to right of decimal pt.): 43.43606
Release Point Longitude (5 digits to right of decimal pt.): -105.48730
Release Height (ft): N/A

Company: EOG Resources, Inc. Facility: Mary's Draw 412-1527H, Mary's Draw 411-15H
EU Type: Treater EUID: HT2

Emission Unit Type:	Treater	Date of Application:	12/22/2014
AQD Emission Unit ID:		EU ID used by Company:	HT2
Emission Unit Description Used by Company:	Heater Treater BE 4616		

Emission Unit Installation or Modification Schedule-*Select reason(s) for this emissions unit being included in this application (must be completed regardless of date of installation or modification) and the date associated with the EU Installation of Modification Schedule:*

Reason: Construction (greenfield/new facility)

*If Reason = **Construction (greenfield/new facility)**, enter date contruction began:*	Date: 9/20/2014
*If Reason = **Synthetic Minor**, enter date emissions unit became new synthetic minor:*	Date:
*If Reason = **Modification**, enter modification date or date modification began:*	Date:
*If Reason = **Temporary Permit**, enter beginning date for temporary permit:*	Date:
*If Reason = **Reconstruction**, enter beginning date for reconstruction:*	Date:

If the Reason is: **Reconstruction** *or* ***Temporary Permit*** *or* **Other** *please explain below:*

*Oil and Gas Production Site **ONLY***

if Reason = **Construction (greenfield/new facility)** will production commence after permit is issued?	No
if previous question's answer is No" (production not waiting until after permit), then provide first date of production:	Date: 9/22/2014

List in the area below any previous NSR permit numbers for air contaminant sources included in this application, if applicable, and describe the requested modification. Attach an additional sheet if necessary:

N/A

SCC Codes

Enter SCC for each process. Enter at least one SCC Code. Click to see SCC Code List

Enter SCC Code		*SCC Short Name*	Sce Level 4 Name
SCC Code 1 (Required Field):	2310011100	On-Shore Oil Production /Heater Treater	Heater Treater
SCC Code 2 (as needed):			
SCC Code 3 (as needed):			

General Emission Unit Dates

Initial Construction Commencement Date:	9/20/2014
Initial Operation Commencement Date:	9/22/2014
Most Recent Construction/ Modification Commencement Date:	
Most Recent Operation Commencement Date:	

Potential Operating Schedule:

Provide the operating schedule for this emission unit.

Hours/day:	24
Hours/year:	8760

Company: BOG Resources, Inc. Facility: Mary's Draw 412-1527H, Mary's Draw 411-15H
EU Type: Treater EUID: HT2

Criteria Pollutants

The following tables request information that is needed to determine the applicable requirements and the compliance status of this emission unit with those requirements.

Criteria Pollutants						
		Efficiency Stds.				
Pollutant	Pre-Controlled Potential Emissions (tons/yr)	Potential to Emit (PTE)*	Units*	Potential to Emit (lbs/hr)*	Potential to Emit (tons/yr)*	Basis for Determination*
Particulate emissions (PE/PM) (formerly particulate matter)						
PM =10 microns in diameter (PE/PM10)						
PM =2.5 microns in diameter (PE/PM2.5)						
Sulfur dioxide (SO2)						
Nitrogen Oxides (Nox)	0.32			0.07	0.32	AP-42/ ProMax
Carbon monoxide (CO)	0.27			0.06	0.27	AP-42/ ProMax
Volatile organic compounds (VOC)	1302.29			5.95	26.06	AP-42/ ProMax
Lead (Pb)						
Tota Hazardous Air Pollutants (HAPs)	126.46			0.58	2.53	AP-42/ ProMax
Fluoride (F)						
Hydrogen Sulfide (H2S)						
Mercury (Hg)						
Total Reduced Sulfur (TRS)						
Sulfuric Acid Mist (SAM)						

*Provide your calculations as an attachment and explain how all process variables and emissions factors were selected.

Hazardous Air Pollutants (HAPs) and Toxic Air Contaminants

Hazardous Air Pollutants (HAPs) and Toxic Air Contaminants						
		Efficiency Stds.				
Pollutant	Pre-Controlled Potential Emissions (tons/yr)	Potential to Emit (PTE)*	Units*	Potential to Emit (lbs/hr)*	Potential to Emit (tons/yr)*	Basis for Determination*
Benzene	15.17			0.06	0.30	AP-42/ ProMax
Toluene	0.19			0.00	0.02	AP-42/ ProMax
Ethylbenzene	0.63			0.01	0.07	AP-42/ ProMax
Xylenes	2.30			0.05	0.24	AP-42/ ProMax
n-Hexane	17.76			0.36	1.83	AP-42/ ProMax
2,2,4-Trimethylpentane	0.71			0.01	0.07	AP-42/ ProMax

*Provide your calculations as an attachment and explain how all process variables and emissions factors were selected.

Company: EOG Resources, Inc. Facility: Mary's Draw 412-1527H, Mary's Draw 411-15H
EU Type: Treater EUID: HT2

Greenhouse Gases (GHGs)

Greenhouse Gases (GHGs)						
		Efficiency Stds.				
Pollutant	Pre-Controlled Potential Emissions (tons/yr)	Potential to Emit (PTE)*	Units*	Potential to Emit (lbs/hr)*	Potential to Emit (tons/yr)*	Basis for Determination*
Carbon Dioxide	192.14			43.87	192.14	40 CFR 98.37 Table C-1
Methane	0.01			0.00	0.01	40 CFR 98.37 Table C-1
*Provide your calculations as an attachment and explain how all process variables and emissions factors were selected.						

Process Flow Diagram:

Attach a Process Flow Diagram to this application for this emission unit.

Have you attached a process diagram? Yes

Best Available Control Technology (BACT):

Is this Emissions Unit subject to BACT? No

Was a BACT Analysis completed for this emission unit? No

Have you attached a BACT analysis? No

Pollutant(s):

Proposed BACT:

Lowest Achievable Emission Rate (LAER):

Is Emissions Unit subject to LAER? No

Was LAER Analysis completed for emission unit? No

Pollutant(s):

Proposed LAER:

Federal and State Rule Applicability:

New Source Performance Standard are listed under 40 CFR 60- Standards of Performance for New Stationary Sources.

New Source Performance Standards (NSPS): Not Affected

If applicable, list NSPS Subpart(s):

National Emissions Standards for Hazardous Air Pollutants (NESHAP Part 61) are listed under 40 CFR 61. (These include asbestos, benzene, beryllium, mercury, and vinyl chloride).

National Emission Standards for Hazardous Air Pollutants (NESHAP Part 61): Not Affected

If applicable, list Part 61 NESHAP Subpart(s):

National Emission Standards for Hazardous Air Pollutants (NESHAP Part 63) standards are listed under 40 CFR 63

National Emission Standards for Hazardous Air Pollutants (NESHAP Part 63): Not Affected

If applicable, list Part 63 NESHAP Subpart(s):

These rules are found under WAQSR Chapter 6, Section 4.

Prevention of Significant Deterioration (PSD): Not Affected

These rules are found under WAQSR Chapter 6, Section 13.

Non-Attainment New Source Review: Not Affected

Company: EOG Resources, Inc. Facility: Mary's Draw 412-1527H, Mary's Draw 411-15H
EU Type: Treater EUID: HT2

Emissions Unit Specific Information

Type of Vessel: Heater-Treater

Is Vessel Heated? Yes

Operating Temperature (F): 143

Operating Pressure (psig): 80

Control Equipment:

Does this emission unit employ emissions control equipment? Yes

Yes- fill out the applicable information below.

No- Go to Release Point Section.

Flare

Is this the only Control Equipment for this emissions unit? Yes

If > 1 control for this emissions unit, then this control equipment is:

Are other emission units vented to this control equipment? Yes

If other emission units are vented to this control equipment, List them below:

Five oil tanks, two produced water tanks, one emergency tank, and one vapor recovery tower

List all release point IDs associated with this control equipment below:

Flare

Manufacturer: Steffes

Model Name and Number: 5462146

Date Installed: 9/20/2014

Company Control Equipment ID:

Company Control Equipment Description: EOG #BE4776 12 ft. flare with 3 in/4 in diameter with pilot flame

Ignition Device: Yes

Flame Presence Sensor: Yes

Flame Presence Type: Thermocouple

Inlet Gas Temp (F): 143

Inlet Gas Flow Rate (acfm): 2244

Outlet Gas Temp (F): 1400

Outlet Gas Flow Rate (acfm):

Pollutants Controlled

Pollutants Controlled				
Pollutant	In Control? (yes/no)	Design Control Efficiency (%):	Capture Efficiency (%):	Operating Control Efficiency (%):
VOC - Volatile Organic Compounds	Yes	98.00%	100.00%	98.00%
HAPS - Total Combined Hazardous Air Pollutants	Yes	98.00%	100.00%	98.00%

Company: EOG Resources, Inc. Facility: Mary's Draw 412-1527H, Mary's Draw 411-15H
EU Type: Treater EUID: HT2

Horizontal or Vertical Release Point Information:

Vertical Or Horizontal Release Point 1	
Company Release Point ID:	Flare FL 1
Company Release Point Description:	Flare Stack
Release Point Type:	Vertical
For longitude and latitude, use NAD 83/WGS84 datum	
Release Point Latitude (5 digits to right of decimal pt.):	43.43606
Release Point Longitude (5 digits to right of decimal pt.):	-105.48730
Base Elevation (ft):	4780
Stack Height (ft):	12
Stack Diameter (ft):	0.25 and 0.33
Exit Gas Velocity (ft/s):	65
Exit Gas Temp (F):	1400
Exit Gas Flow Rate (acfm):	

Company: EOG Resources, Inc. Facility: Mary's Draw 412-1527H, Mary's Draw 411-15H
EU Type: Vapor Recovery Tower EUID: VRT2

Emission Unit Type: Vapor Recovery Tower — Date of Application: 12/22/2014
AQD Emission Unit ID: — EU ID used by Company: VRT2
Emission Unit Description Used by Company: Vapor Recovery Tower BE 4772

Emission Unit Installation or Modification Schedule- *Select reason(s) for this emissions unit being included in this application (must be completed regardless of date of installation or modification) and the date associated with the EU Installation of Modification Schedule:*

Reason: Construction (greenfield/new facility)

*If Reason = **Construction (greenfield/new facility)**, enter date contruction began:*	Date: 9/20/2014
*If Reason = **Synthetic Minor**, enter date emissions unit became new synthetic minor:*	Date:
*If Reason = **Modification**, enter modification date or date modification began:*	Date:
*If Reason = **Temporary Permit**, enter beginning date for temporary permit:*	Date:
*If Reason = **Reconstruction**, enter beginning date for reconstruction:*	Date:

If the Reason is: **Reconstruction** *or* ***Temporary Permit*** *or* **Other** *please explain below:*

*Oil and Gas Production Site **ONLY***

if Reason = **Construction (greenfield/new facility)** will production commence after permit is issued?	No
if previous question's answer is No" (production not waiting until after permit), then provide first date of production:	Date: 9/22/2014

List in the area below any previous NSR permit numbers for air contaminant sources included in this application, if applicable, and describe the requested modification. Attach an additional sheet if necessary:

SCC Codes

Enter SCC for each process. Enter at least one SCC Code. Click to see SCC Code List

Enter SCC Code		*SCC Short Name*	Scc Level 4 Name
SCC Code 1 (Required Field):	3100017	Crude Oil Production /Oil/Gas/Water/Separation	Oil/Gas/Water/Separation
SCC Code 2 (as needed):			
SCC Code 3 (as needed):			

General Emission Unit Dates

Initial Construction Commencement Date: 9/20/2014
Initial Operation Commencement Date: 9/22/2014
Most Recent Construction/ Modification Commencement Date:
Most Recent Operation Commencement Date:

Potential Operating Schedule:

Provide the operating schedule for this emission unit.

Hours/day: 24
Hours/year: 8760

Company: EOG Resources, Inc. Facility: Mary's Draw 412-1527H, Mary's Draw 411-15H
EU Type: Vapor Recovery Tower EUID: VRT2

Criteria Pollutants

The following tables request information that is needed to determine the applicable requirements and the compliance status of this emission unit with those requirements.

Criteria Pollutants						
		Efficiency Stds.				
Pollutant	Pre-Controlled Potential Emissions (tons/yr)	Potential to Emit (PTE)*	Units*	Potential to Emit (lbs/hr)*	Potential to Emit (tons/yr)*	Basis for Determination*
Particulate emissions (PE/PM) (formerly particulate matter)						
PM #10 microns in diameter (PE/PM10)						
PM #2.5 microns in diameter (PE/PM2.5)						
Sulfur dioxide (SO2)						
Nitrogen Oxides (Nox)						
Carbon monoxide (CO)						
Volatile organic compounds (VOC)	1293.16			5.90	25.86	ProMax
Lead (Pb)						
Tota Hazardous Air Pollutants (HAPs)	38.44			0.77	0.77	ProMax
Fluoride (F)						
Hydrogen Sulfide (H2S)						
Mercury (Hg)						
Total Reduced Sulfur (TRS)						
Sulfuric Acid Mist (SAM)						

*Provide your calculations as an attachment and explain how all process variables and emissions factors were selected.

Hazardous Air Pollutants (HAPs) and Toxic Air Contaminants

Hazardous Air Pollutants (HAPs) and Toxic Air Contaminants						
		Efficiency Stds.				
Pollutant	Pre-Controlled Potential Emissions (tons/yr)	Potential to Emit (PTE)*	Units*	Potential to Emit (lbs/hr)*	Potential to Emit (tons/yr)*	Basis for Determination*
Benzene	0.05			0.00	0.00	ProMax
Toluene	0.04			0.00	0.00	ProMax
Ethylbenzene	1.07			0.00	0.02	ProMax
Xylenes	3.52			0.02	0.07	ProMax
n-Hexane	12.72			0.06	0.25	ProMax
2,2,4-Trimethylpentane	4.04			0.02	0.08	ProMax

*Provide your calculations as an attachment and explain how all process variables and emissions factors were selected.

Greenhouse Gases (GHGs)

Greenhouse Gases (GHGs)						
		Efficiency Stds.				
Pollutant	Pre-Controlled Potential Emissions (tons/yr)	Potential to Emit (PTE)*	Units*	Potential to Emit (lbs/hr)*	Potential to Emit (tons/yr)*	Basis for Determination*
Carbon Dioxide	26.39			0.12	0.53	ProMax
Methane	89.97			0.41	1.80	ProMax

*Provide your calculations as an attachment and explain how all process variables and emissions factors were selected.

Process Flow Diagram:

Attach a Process Flow Diagram to this application for this emission unit.

Have you attached a process diagram? Yes

Best Available Control Technology (BACT):

Is this Emissions Unit subject to BACT? No

Was a BACT Analysis completed for this emission unit? No

Have you attached a BACT analysis? No

Pollutant(s):

Proposed BACT: 100% Capture Efficiency and 98% Destruction Efficiency by Flare

Lowest Achievable Emission Rate (LAER):

Is Emissions Unit subject to LAER? No

Was LAER Analysis completed for emission unit? No

Pollutant(s):

Proposed LAER:

Company: EOG Resources, Inc. Facility: Mary's Draw 412-1527H, Mary's Draw 411-15H
EU Type: Vapor Recovery Tower EUID: VRT2

Federal and State Rule Applicability:

New Source Performance Standard are listed under 40 CFR 60- Standards of Performance for New Stationary Sources.

New Source Performance Standards (NSPS): Not Affected

If applicable, list NSPS Subpart(s):

National Emissions Standards for Hazardous Air Pollutants (NESHAP Part 61) are listed under 40 CFR 61. (These include asbestos, benzene, beryllium, mercury, and vinyl chloride).

National Emission Standards for Hazardous Air Pollutants (NESHAP Part 61): Not Affected

If applicable, list Part 61 NESHAP Subpart(s):

National Emission Standards for Hazardous Air Pollutants (NESHAP Part 63) standards are listed under 40 CFR 63

National Emission Standards for Hazardous Air Pollutants (NESHAP Part 63): Not Affected

If applicable, list Part 63 NESHAP Subpart(s):

These rules are found under WAQSR Chapter 6, Section 4.

Prevention of Significant Deterioration (PSD): Not Affected

These rules are found under WAQSR Chapter 6, Section 13.

Non-Attainment New Source Review: Not Affected

Emissions Unit Specific Information

Flow Rate or Throughput: 19.06 Units: scfm

VOC Concentration (%): 84.58

HAPs Concentration (%): 2.51

Control Equipment:

Does this emission unit employ emissions control equipment? Yes

Yes- fill out the applicable information below.

No- Go to Release Point Section.

Flare

Is this the only Control Equipment for this emissions unit? Yes

If > 1 control for this emissions unit, then this control equipment is

Are other emission units vented to this control equipment? Yes

If other emission units are vented to this control equipment, List them below:

Five oil tanks, two produced water tanks, one emergency tank, and one vapor recovery tower

List all release point IDs associated with this control equipment below:

Flare

Manufacturer: Steffes

Model Name and Number: 5462146

Date Installed: 9/20/2014

Company Control Equipment ID:

Company Control Equipment Description: EOG #BE4776 12 ft. flare with 3 in/4 in diameter with pilot flame

Ignition Device: Yes

Flame Presence Sensor: Yes

Flame Presence Type: Thermocouple

Inlet Gas Temp (F): 143

Inlet Gas Flow Rate (acfm): 3674.43

Outlet Gas Temp (F): 1400

Outlet Gas Flow Rate (acfm):

Company: EOG Resources, Inc. Facility: Mary's Draw 412-1527H, Mary's Draw 411-15H
EU Type: Vapor Recovery Tower EUID: VRT2

Pollutants Controlled

Pollutants Controlled				
Pollutant	**In Control? (yes/no)**	**Design Control Efficiency (%):**	**Capture Efficiency (%):**	**Operating Control Efficiency (%):**
VOC - Volatile Organic Compounds	Yes	98.00%	100.00%	98.00%
HAPS - Total Combined Hazardous Air Pollutants	Yes	98.00%	100.00%	98.00%

Horizontal or Vertical Release Point Information:

Vertical Or Horizontal Release Point 1	
Company Release Point ID:	Flare FL 1
Company Release Point Description:	Flare Stack
Release Point Type:	Vertical
For longitude and latitude, use NAD 83/WGS84 datum	
Release Point Latitude (5 digits to right of decimal pt.):	43.43606
Release Point Longitude (5 digits to right of decimal pt.):	-105.48730
Base Elevation (ft):	4780
Stack Height (ft):	12
Stack Diameter (ft):	0.25 and 0.33
Exit Gas Velocity (ft/s):	65
Exit Gas Temp (F):	1400
Exit Gas Flow Rate (acfm):	

Company: EOG Resources, Inc. Facility: Mary's Draw 412-1527H, Mary's Draw 411-15H
EU Type: Fugitives EUID: FUG2

Emission Unit Type:	Fugitives	Date of Application:	12/22/2014
AQD Emission Unit ID:		EU ID used by Company:	FUG2
Emission Unit Description Used by Company:	All Fugitives (Valves, Flanges, Connections, Seals, Drains)		

Emission Unit Installation or Modification Schedule- *Select reason(s) for this emissions unit being included in this application (must be completed regardless of date of installation or modification) and the date associated with the EU Installation of Modification Schedule:*

Reason: Construction (greenfield/new facility)

If Reason = ***Construction (greenfield/new facility)****, enter date contruction began:*	Date: 9/20/2014
If Reason = ***Synthetic Minor****, enter date emissions unit became new synthetic minor:*	Date:
If Reason = ***Modification****, enter modification date or date modification began:*	Date:
If Reason = ***Temporary Permit****, enter beginning date for temporary permit:*	Date:
If Reason = ***Reconstruction****, enter beginning date for reconstruction:*	Date:

If the Reason is: **Reconstruction** *or* ***Temporary Permit*** *or* **Other** *please explain below:*

Oil and Gas Production Site ***ONLY***

if Reason = **Construction (greenfield/new facility)** will production commence after permit is issued?	No
if previous question's answer is No" (production not waiting until after permit), then provide first date of production:	Date: 9/22/2014

List in the area below any previous NSR permit numbers for air contaminant sources included in this application, if applicable, and describe the requested modification. Attach an additional sheet if necessary:

N/A

SCC Codes

Enter SCC for each process. Enter at least one SCC Code. Click to see SCC Code List

Enter SCC Code		*SCC Short Name*	Sec Level 4 Name
SCC Code 1 (Required Field):	2310011500	On-Shore Oil Production /Fugitives: All Processes	Fugitives: All Processes
SCC Code 2 (as needed):			
SCC Code 3 (as needed):			

General Emission Unit Dates

Initial Construction Commencement Date:	9/20/2014
Initial Operation Commencement Date:	9/22/2014
Most Recent Construction/ Modification Commencement Date:	
Most Recent Operation Commencement Date:	

Potential Operating Schedule:

Provide the operating schedule for this emission unit.

Hours/day:	24
Hours/year:	8760

Company: EOG Resources, Inc. Facility: Mary's Draw 412-1527H, Mary's Draw 411-15H
EU Type: Fugitives EUID: FUG2

Criteria Pollutants

The following tables request information that is needed to determine the applicable requirements and the compliance status of this emission unit with those requirements.

Criteria Pollutants						
		Efficiency Stds.				
Pollutant	**Pre-Controlled Potential Emissions (tons/yr)**	**Potential to Emit (PTE)***	**Units***	**Potential to Emit (lbs/hr)***	**Potential to Emit (tons/yr)***	**Basis for Determination***
Particulate emissions (PE/PM) (formerly particulate matter)						
PM #10 microns in diameter (PE/PM10)						
PM #2.5 microns in diameter (PE/PM2.5)						
Sulfur dioxide (SO2)						
Nitrogen Oxides (Nox)						
Carbon monoxide (CO)						
Volatile organic compounds (VOC)	4.90			1.12	4.90	Note 1 (see below)
Lead (Pb)						
Tota Hazardous Air Pollutants (HAPs)	0.24			0.05	0.24	Note 1 (see below)
Fluoride (F)						
Hydrogen Sulfide (H2S)						
Mercury (Hg)						
Total Reduced Sulfur (TRS)						
Sulfuric Acid Mist (SAM)						

*Provide your calculations as an attachment and explain how all process variables and emissions factors were selected.

Note 1: EPA Protocol for Equipment Leak Emission Estimates, November 1995, Table 2-4, Pages 2-15.

Company: EOG Resources, Inc. Facility: Mary's Draw 412-1527H, Mary's Draw 411-15H
EU Type: Fugitives EUID: FUG2

Hazardous Air Pollutants (HAPs) and Toxic Air Contaminants

Hazardous Air Pollutants (HAPs) and Toxic Air Contaminants						
		Efficiency Stds.				
Pollutant	Pre-Controlled Potential Emissions (tons/yr)	Potential to Emit (PTE)*	Units*	Potential to Emit (lbs/hr)*	Potential to Emit (tons/yr)*	Basis for Determination*
Benzene	0.00			0.00	0.00	Note 1 (see below)
Toluene	0.02			0.00	0.02	Note 1 (see below)
Ethylbenzene	0.02			0.00	0.02	Note 1 (see below)
Xylenes	0.02			0.01	0.02	Note 1 (see below)
n-Hexane	0.10			0.02	0.10	Note 1 (see below)
2,2,4-Trimethylpentane	0.07			0.02	0.07	Note 1 (see below)

*Provide your calculations as an attachment and explain how all process variables and emissions factors were selected.

Note 1: EPA Protocol for Equipment Leak Emission Estimates, November 1995, Table 2-4, Pages 2-15.

Greenhouse Gases (GHGs)

Greenhouse Gases (GHGs)						
		Efficiency Stds.				
Pollutant	Pre-Controlled Potential Emissions (tons/yr)	Potential to Emit (PTE)*	Units*	Potential to Emit (lbs/hr)*	Potential to Emit (tons/yr)*	Basis for Determination*

*Provide your calculations as an attachment and explain how all process variables and emissions factors were selected.

Company: EOG Resources, Inc. Facility: Mary's Draw 412-1527H, Mary's Draw 411-15H
EU Type: Fugitives EUID: FUG2

Process Flow Diagram:

Attach a Process Flow Diagram to this application for this emission unit.

Have you attached a process diagram? Yes

Best Available Control Technology (BACT):

Is this Emissions Unit subject to BACT? No

Was a BACT Analysis completed for this emission unit? No

Have you attached a BACT analysis? No

Pollutant(s):

Proposed BACT:

Lowest Achievable Emission Rate (LAER):

Is Emissions Unit subject to LAER? No

Was LAER Analysis completed for emission unit? No

Pollutant(s):

Proposed LAER:

Federal and State Rule Applicability:

New Source Performance Standard are listed under 40 CFR 60- Standards of Performance for New Stationary Sources.

New Source Performance Standards (NSPS): Not Affected

If applicable, list NSPS Subpart(s):

National Emissions Standards for Hazardous Air Pollutants (NESHAP Part 61) are listed under 40 CFR 61. (These include asbestos, benzene, beryllium, mercury, and vinyl chloride).

National Emission Standards for Hazardous Air Pollutants (NESHAP Part 61): Not Affected

If applicable, list Part 61 NESHAP Subpart(s):

National Emission Standards for Hazardous Air Pollutants (NESHAP Part 63) standards are listed under 40 CFR 63

National Emission Standards for Hazardous Air Pollutants (NESHAP Part 63): Not Affected

If applicable, list Part 63 NESHAP Subpart(s):

These rules are found under WAQSR Chapter 6, Section 4.

Prevention of Significant Deterioration (PSD): Not Affected

These rules are found under WAQSR Chapter 6, Section 13.

Non-Attainment New Source Review: Not Affected

Company: EOG Resources, Inc. Facility: Mary's Draw 412-1527H, Mary's Draw 411-15H
EU Type: Fugitives EUID: FUG2

Emissions Unit Specific Information

Type of Fugitive Emission: Fugitive Leaks at O&G

Control Equipment:

Does this emission unit employ emissions control equipment? No

Yes- fill out the applicable information below.

No- Go to Release Point Section.

Fugitive Release Point Information:

Fugitive Release Point 1

Company Release Point ID: FUG2

Company Release Point Description: All Fugitives (Valves, Flanges, Connections, Seals, Drains)

Release Point Type: **Fugitive**

For longitude and latitude, use NAD 83/WGS84 datum

Release Point Latitude (5 digits to right of decimal pt.): 43.43606

Release Point Longitude (5 digits to right of decimal pt.): -105.48730

Release Height (ft): N/A

Company: EOG Resources, Inc. Facility: Mary's Draw 412-1527H, Mary's Draw 411-15H
EU Type: Loading/Unloading EUID: TLO2

Emission Unit Type: Loading/Unloading — Date of Application: 12/22/2014
AQD Emission Unit ID: — BU ID used by Company: TLO2
Emission Unit Description Used by Company: Truck Oil Loading from Storage Tanks

Emission Unit Installation or Modification Schedule- *Select reason(s) for this emissions unit being included in this application (must be completed regardless of date of installation or modification) and the date associated with the EU Installation of Modification Schedule:*

Reason: Construction (greenfield/new facility)

*If Reason = **Construction (greenfield/new facility)**, enter date contruction began:*	Date: 9/20/2014
*If Reason = **Synthetic Minor**, enter date emissions unit became new synthetic minor:*	Date:
*If Reason = **Modification**, enter modification date or date modification began:*	Date:
*If Reason = **Temporary Permit**, enter beginning date for temporary permit:*	Date:
*If Reason = **Reconstruction**, enter beginning date for reconstruction:*	Date:

If the Reason is: **Reconstruction** *or* ***Temporary Permit*** *or* **Other** *please explain below:*

*Oil and Gas Production Site **ONLY***

if Reason = **Construction (greenfield/new facility)** will production commence after permit is issued? No

if previous question's answer is No" (production not waiting until after permit), then provide first date of production: Date: 9/22/2014

List in the area below any previous NSR permit numbers for air contaminant sources included in this application, if applicable, and describe the requested modification. Attach an additional sheet if necessary:

N/A

SCC Codes

Enter SCC for each process. Enter at least one SCC Code. Click to see SCC Code List

Enter SCC Code		*SCC Short Name*	Scc Level 4 Name
SCC Code 1 (Required Field):	2310010800	Oil & Gas Expl & Prod /Crude Petroleum /Oil Well Truck Loading	Oil Well Truck Loading
SCC Code 2 (as needed):			
SCC Code 3 (as needed):			

General Emission Unit Dates

Initial Construction Commencement Date: 9/20/2014
Initial Operation Commencement Date: 9/22/2014
Most Recent Construction/ Modification Commencement Date:
Most Recent Operation Commencement Date:

Potential Operating Schedule:

Provide the operating schedule for this emission unit.

Hours/day: 24
Hours/year: 8760

Criteria Pollutants

The following tables request information that is needed to determine the applicable requirements and the compliance status of this emission unit with those requirements.

Criteria Pollutants						
		Efficiency Stds.				
Pollutant	Pre-Controlled Potential Emissions (tons/yr)	Potential to Emit (PTE)*	Units*	Potential to Emit (lbs/hr)*	Potential to Emit (tons/yr)*	Basis for Determination*
Particulate emissions (PE/PM) (formerly particulate matter)						
PM #10 microns in diameter (PE/PM10)						
PM #2.5 microns in diameter (PE/PM2.5)						
Sulfur dioxide (SO2)						
Nitrogen Oxides (Nox)						
Carbon monoxide (CO)						
Volatile organic compounds (VOC)	0.00			0.00	0.00	AP-42
Lead (Pb)						
Tota Hazardous Air Pollutants (HAPs)	0.00E+00			0.00	0.00	AP-42
Fluoride (F)						
Hydrogen Sulfide (H2S)						
Mercury (Hg)						
Total Reduced Sulfur (TRS)						
Sulfuric Acid Mist (SAM)						

*Provide your calculations as an attachment and explain how all process variables and emissions factors were selected.

Hazardous Air Pollutants (HAPs) and Toxic Air Contaminants

Hazardous Air Pollutants (HAPs) and Toxic Air Contaminants						
		Efficiency Stds.				
Pollutant	Pre-Controlled Potential Emissions (tons/yr)	Potential to Emit (PTE)*	Units*	Potential to Emit (lbs/hr)*	Potential to Emit (tons/yr)*	Basis for Determination*
Benzene	0.00E+00			0.00E+00	0.00E+00	AP-42
Toluene	0.00E+00			0.00E+00	0.00E+00	AP-42
Ethylbenzene	0.00E+00			0.00E+00	0.00E+00	AP-42
Xylenes	0.00			0.00E+00	0.00E+00	AP-42
n-Hexane	0.23			0.00E+00	0.00E+00	AP-42
2,2,4-Trimethylpentane	0.06			0.00E+00	0.00E+00	AP-42

*Provide your calculations as an attachment and explain how all process variables and emissions factors were selected.

Greenhouse Gases (GHGs)

Greenhouse Gases (GHGs)						
		Efficiency Stds.				
Pollutant	Pre-Controlled Potential Emissions (tons/yr)	Potential to Emit (PTE)*	Units*	Potential to Emit (lbs/hr)*	Potential to Emit (tons/yr)*	Basis for Determination*

*Provide your calculations as an attachment and explain how all process variables and emissions factors were selected.

Process Flow Diagram:

Attach a Process Flow Diagram to this application for this emission unit.

Have you attached a process diagram? Yes

Best Available Control Technology (BACT):

Is this Emissions Unit subject to BACT? No

Was a BACT Analysis completed for this emission unit? No

Have you attached a BACT analysis? No

Pollutant(s):

Proposed BACT:

Lowest Achievable Emission Rate (LAER):

Is Emissions Unit subject to LAER? No

Was LAER Analysis completed for emission unit? No

Pollutant(s):

Proposed LAER:

Federal and State Rule Applicability:

New Source Performance Standard are listed under 40 CFR 60- Standards of Performance for New Stationary Sources.

New Source Performance Standards (NSPS): Not Affected

If applicable, list NSPS Subpart(s):

National Emissions Standards for Hazardous Air Pollutants (NESHAP Part 61) are listed under 40 CFR 61. (These include asbestos, benzene, beryllium, mercury, and vinyl chloride).

National Emission Standards for Hazardous Air Pollutants (NESHAP Part 61): Not Affected

If applicable, list Part 61 NESHAP Subpart(s):

National Emission Standards for Hazardous Air Pollutants (NESHAP Part 63) standards are listed under 40 CFR 63

National Emission Standards for Hazardous Air Pollutants (NESHAP Part 63): Not Affected

If applicable, list Part 63 NESHAP Subpart(s):

These rules are found under WAQSR Chapter 6, Section 4.

Prevention of Significant Deterioration (PSD): Not Affected

These rules are found under WAQSR Chapter 6, Section 13.

Non-Attainment New Source Review: Not Affected

Company: EOG Resources, Inc. Facility: Mary's Draw 412-1527H, Mary's Draw 411-15H
EU Type: Loading/Unloading EUID: TLO2

Emissions Unit Specific Information

Type of Material: Liquid

Material Description: Crude Oil

Maximum Annual Throughput: 378870 Units: barrels/yr

Maximum Hourly Throughput: 200 Units: barrels/hr

Detailed Description of Loading/Unloading/Dump Source: Oil and produced water truck loading is controlled with vapor return lines to the storage tanks with a 70% capture efficiency and routed to the flare.

Control Equipment:

Does this emission unit employ emissions control equipment? No

Yes- fill out the applicable information below.

No- Go to Release Point Section.

Flare

Is this the only Control Equipment for this emissions unit? Yes

If > 1 control for this emissions unit, then this control equipment is

Are other emission units vented to this control equipment? Yes

If other emission units are vented to this control equipment, List them below:

Five oil tanks, two produced water tanks, one emergency tank, and one vapor recovery tower

List all release point IDs associated with this control equipment below:

Flare

Manufacturer: Steffes

Model Name and Number: 5462146

Date Installed: 9/20/2014

Company Control Equipment ID:

Company Control Equipment Description: EOG #BE4776 12 ft. flare with 3 in/4 in diameter with pilot flame

Ignition Device: Yes

Flame Presence Sensor: Yes

Flame Presence Type: Thermocouple

Inlet Gas Temp (F): 143

Inlet Gas Flow Rate (acfm): 3674.43

Outlet Gas Temp (F): 1400

Outlet Gas Flow Rate (acfm):

Pollutants Controlled

Pollutants Controlled				
Pollutant	In Control? (yes/no)	Design Control Efficiency (%):	Capture Efficiency (%):	Operating Control Efficiency (%):
VOC - Volatile Organic Compounds	Yes	98.00%	100.00%	98.00%
HAPS - Total Combined Hazardous Air Pollutants	Yes	98.00%	100.00%	98.00%

Company: EOG Resources, Inc. Facility: Mary's Draw 412-1527H, Mary's Draw 411-15H
EU Type: Loading/Unloading EUID: TLO2

Horizontal or Vertical Release Point Information:

Vertical Or Horizontal Release Point 1	
Company Release Point ID:	Flare FL 1
Company Release Point Description:	Flare Stack
Release Point Type:	Vertical
For longitude and latitude, use NAD 83/WGS84 datum	
Release Point Latitude (5 digits to right of decimal pt.):	43.43606
Release Point Longitude (5 digits to right of decimal pt.):	-105.48730
Base Elevation (ft):	4780
Stack Height (ft):	12
Stack Diameter (ft):	0.25 and 0.33
Exit Gas Velocity (ft/s):	65
Exit Gas Temp (F):	1400
Exit Gas Flow Rate (acfm):	

Company: EOG Resources, Inc. Facility: Mary's Draw 412-1527H, Mary's Draw 411-15H
EU Type: Planned MSS Emissions EUID: BD2

Emission Unit Type:	Planned MSS Emissions	Date of Application:	12/22/2014
AQD Emission Unit ID:		EU ID used by Company:	BD2
Emission Unit Description Used by Company:	Blowdowns		

Emission Unit Installation or Modification Schedule- *Select reason(s) for this emissions unit being included in this application (must be completed regardless of date of installation or modification) and the date associated with the EU Installation of Modification Schedule:*

Reason: Construction (greenfield/new facility)

If Reason = ***Construction (greenfield/new facility)****, enter date contruction began:*	Date:	9/20/2014
If Reason = ***Synthetic Minor****, enter date emissions unit became new synthetic minor:*	Date:	
If Reason = ***Modification****, enter modification date or date modification began:*	Date:	
If Reason = ***Temporary Permit****, enter beginning date for temporary permit:*	Date:	
If Reason = ***Reconstruction****, enter beginning date for reconstruction:*	Date:	

If the Reason is: **Reconstruction** *or* ***Temporary Permit*** *or* **Other** *please explain below:*

Oil and Gas Production Site ***ONLY***

if Reason = **Construction (greenfield/new facility)** will production commence after permit is issued?		No
if previous question's answer is No" (production not waiting until after permit), then provide first date of production:	Date:	9/22/2014

List in the area below any previous NSR permit numbers for air contaminant sources included in this application, if applicable, and describe the requested modification. Attach an additional sheet if necessary:

N/A

SCC Codes

Enter SCC for each process. Enter at least one SCC Code. Click to see SCC Code List

Enter SCC Code		*SCC Short Name*	Scc Level 4 Name
SCC Code 1 (Required Field):	2310021603	On-Shore Gas Production / Gas Well Venting - Blowdowns	Gas Well Venting - Blowdowns
SCC Code 2 (as needed):			
SCC Code 3 (as needed):			

General Emission Unit Dates

Initial Construction Commencement Date:	9/20/2014
Initial Operation Commencement Date:	9/22/2014
Most Recent Construction/ Modification Commencement Date:	
Most Recent Operation Commencement Date:	

Potential Operating Schedule:

Provide the operating schedule for this emission unit.

Hours/day:	0.5
Hours/year:	1.5

Company: EOG Resources, Inc. Facility: Mary's Draw 412-1527H, Mary's Draw 411-15H
EU Type: Planned MSS Emissions EUID: BD2

Criteria Pollutants

The following tables request information that is needed to determine the applicable requirements and the compliance status of this emission unit with those requirements.

Criteria Pollutants						
		Efficiency Stds.				
Pollutant	**Pre-Controlled Potential Emissions (tons/yr)**	**Potential to Emit (PTE)***	**Units***	**Potential to Emit (lbs/hr)***	**Potential to Emit (tons/yr)***	**Basis for Determination***
Particulate emissions (PE/PM) (formerly particulate matter)						
PM #10 microns in diameter (PE/PM10)						
PM #2.5 microns in diameter (PE/PM2.5)						
Sulfur dioxide (SO2)						
Nitrogen Oxides (Nox)						
Carbon monoxide (CO)						
Volatile organic compounds (VOC)	2.14E-02			28.48829	2.14E-02	
Lead (Pb)						
Tota Hazardous Air Pollutants (HAPs)	1.26E-03			30.17116	2.26E-02	
Fluoride (F)						
Hydrogen Sulfide (H2S)						
Mercury (Hg)						
Total Reduced Sulfur (TRS)						
Sulfuric Acid Mist (SAM)						

*Provide your calculations as an attachment and explain how all process variables and emissions factors were selected.

Company: EOG Resources, Inc. Facility: Mary's Draw 412-1527H, Mary's Draw 411-15H
EU Type: Planned MSS Emissions EUID: BD2

Hazardous Air Pollutants (HAPs) and Toxic Air Contaminants

Hazardous Air Pollutants (HAPs) and Toxic Air Contaminants						
		Efficiency Stds.				
Pollutant	Pre-Controlled Potential Emissions (tons/yr)	Potential to Emit (PTE)*	Units*	Potential to Emit (lbs/hr)*	Potential to Emit (tons/yr)*	Basis for Determination*
Benzene	2.7E-05			3.6E-02	2.7E-05	
Toluene	4.0E-05			5.4E-02	4.0E-05	
Ethylbenzene	7.1E-06			9.5E-03	7.1E-06	
Xylenes	2.2E-05			3.0E-02	2.2E-05	
n-Hexane	1.1E-03			1.5E+00	1.1E-03	
2,2,4-Trimethylpentane	6.6E-05			8.8E-02	6.6E-05	

*Provide your calculations as an attachment and explain how all process variables and emissions factors were selected.

Greenhouse Gases (GHGs)

Greenhouse Gases (GHGs)						
		Efficiency Stds.				
Pollutant	Pre-Controlled Potential Emissions (tons/yr)	Potential to Emit (PTE)*	Units*	Potential to Emit (lbs/hr)*	Potential to Emit (tons/yr)*	Basis for Determination*

*Provide your calculations as an attachment and explain how all process variables and emissions factors were selected.

Company: EOG Resources, Inc. Facility: Mary's Draw 412-1527H, Mary's Draw 411-15H
EU Type: Planned MSS Emissions EUID: BD2

Process Flow Diagram:

Attach a Process Flow Diagram to this application for this emission unit.

Have you attached a process diagram? Yes

Best Available Control Technology (BACT):

Is this Emissions Unit subject to BACT? No

Was a BACT Analysis completed for this emission unit? No

Have you attached a BACT analysis? No

Pollutant(s):

Proposed BACT:

Lowest Achievable Emission Rate (LAER):

Is Emissions Unit subject to LAER? No

Was LAER Analysis completed for emission unit? No

Pollutant(s):

Proposed LAER:

Federal and State Rule Applicability:

New Source Performance Standard are listed under 40 CFR 60- Standards of Performance for New Stationary Sources.

New Source Performance Standards (NSPS): Not Affected

If applicable, list NSPS Subpart(s):

National Emissions Standards for Hazardous Air Pollutants (NESHAP Part 61) are listed under 40 CFR 61. (These include asbestos, benzene, beryllium, mercury, and vinyl chloride).

National Emission Standards for Hazardous Air Pollutants (NESHAP Part 61): Not Affected

If applicable, list Part 61 NESHAP Subpart(s):

National Emission Standards for Hazardous Air Pollutants (NESHAP Part 63) standards are listed under 40 CFR 63

National Emission Standards for Hazardous Air Pollutants (NESHAP Part 63): Not Affected

If applicable, list Part 63 NESHAP Subpart(s):

These rules are found under WAQSR Chapter 6, Section 4.

Prevention of Significant Deterioration (PSD): Not Affected

These rules are found under WAQSR Chapter 6, Section 13.

Non-Attainment New Source Review: Not Affected

Company: EOG Resources, Inc. Facility: Mary's Draw 412-1527H, Mary's Draw 411-15H
EU Type: Planned MSS Emissions EUID: BD2

Emissions Unit Specific Information

Type of Event: Blow-down

Control Equipment:

Does this emission unit employ emissions control equipment? No

Yes- fill out the applicable information below.

No- Go to Release Point Section.

Fugitive Release Point Information:

Fugitive Release Point 1

Company Release Point ID: BD2

Company Release Point Description: Blowdowns

Release Point Type: **Fugitive**

For longitude and latitude, use NAD 83/WGS84 datum

Release Point Latitude (5 digits to right of decimal pt.): 43.43606

Release Point Longitude (5 digits to right of decimal pt.): -105.48730

Release Height (ft): N/A

Mary's Draw 411-15H IMPACT FORMS

Company: EOG Resources, Inc. Facility: Mary's Draw 412-1527H, Mary's Draw 411-15H
EU Type: Tank EUID: T1 (6532)

Emission Unit Type	Tank	Date of Application:	12/22/2014
AQD Emission Unit ID:		BU ID used by Company:	T1 (6532)
Emission Unit Description Used by Company:		Oil Tank 6532 =AB0101-400 bbl	

Emission Unit Installation or Modification Schedule-*Select reason(s) for this emissions unit being included in this application (must be completed regardless of date of installation or modification) and the date associated with the EU Installation of Modification Schedule:*

Reason: Construction (greenfield/new facility)

*If Reason = **Construction (greenfield/new facility)**, enter date construction began:*	Date:	9/20/2014
*If Reason = **Synthetic Minor**, enter date emissions unit became new synthetic minor:*	Date:	
*If Reason = **Modification**, enter modification date or date modification began:*	Date:	
*If Reason = **Temporary Permit**, enter beginning date for temporary permit:*	Date:	
*If Reason = **Reconstruction**, enter beginning date for reconstruction:*	Date:	

If the Reason is: **Reconstruction** *or* ***Temporary Permit*** *or* **Other** *please explain below:*

*Oil and Gas Production Site **ONLY***

if Reason = **Construction (greenfield/new facility)** will production commence after permit is issued?		NO
if previous question's answer is No" (production not waiting until after permit), then provide first date of production:	Date:	9/24/2014

List in the area below any previous NSR permit numbers for air contaminant sources included in this application, if applicable, and describe the requested modification. Attach an additional sheet if necessary:

N/A

SCC Codes

Enter SCC for each process. Enter at least one SCC Code. Click to see SCC Code List

Enter SCC Code		*SCC Short Name*	Scc Level 4 Name
SCC Code 1 (Required Field):	2310011020	On-Shore Oil Production /Storage Tanks: Crude Oil	Storage Tanks: Crude Oil
SCC Code 2 (as needed):			
SCC Code 3 (as needed):			

General Emission Unit Dates

Initial Construction Commencement Date:	9/20/2014
Initial Operation Commencement Date:	9/24/2014
Most Recent Construction/ Modification Commencement Date:	
Most Recent Operation Commencement Date:	

Potential Operating Schedule:

Provide the operating schedule for this emission unit.

Hours/day:	24
Hours/year:	8760

Company: EOG Resources, Inc. Facility: Mary's Draw 412-1527H, Mary's Draw 411-15H
EU Type: Tank EUID: T1 (6532)

Criteria Pollutants

The following tables request information that is needed to determine the applicable requirements and the compliance status of this emission unit with those requirements.

Criteria Pollutants						
		Efficiency Stds.				
Pollutant	Pre-Controlled Potential Emissions (tons/yr)	Potential to Emit (PTE)*	Units*	Potential to Emit (lbs/hr)*	Potential to Emit (tons/yr)*	Basis for Determinatio n*
Particulate emissions (PE/PM) (formerly particulate matter)						
PM =10 microns in diameter (PE/PM10)						
PM =2.5 microns in diameter (PE/PM2.5)						
Sulfur dioxide (SO2)						
Nitrogen Oxides (Nox)						
Carbon monoxide (CO)						
Volatile organic compounds (VOC)	1.34			0.01	0.03	ProMax
Lead (Pb)						
Tota Hazardous Air Pollutants (HAPs)	0.01			0.00	0.00	ProMax
Fluoride (F)						
Hydrogen Sulfide (H2S)						
Mercury (Hg)						
Total Reduced Sulfur (TRS)						
Sulfuric Acid Mist (SAM)						

*Provide your calculations as an attachment and explain how all process variables and emissions factors were selected.

Hazardous Air Pollutants (HAPs) and Toxic Air Contaminants

Hazardous Air Pollutants (HAPs) and Toxic Air Contaminants						
		Efficiency Stds.				
Pollutant	Pre-Controlled Potential Emissions (tons/yr)	Potential to Emit (PTE)*	Units*	Potential to Emit (lbs/hr)*	Potential to Emit (tons/yr)*	Basis for Determinatio n*
Benzene	9.19E-06			4.20E-08	1.84E-07	ProMax
Toluene	0.01			2.98E-05	1.31E-04	ProMax
Ethylbenzene	0.00			1.51E-06	6.61E-06	ProMax
Xylenes	0.00			3.99E-06	1.75E-05	ProMax
n-Hexane	0.00			1.43E-05	6.25E-05	ProMax
2,2,4-Trimethylpentane	0.00			8.24E-06	3.61E-05	ProMax

*Provide your calculations as an attachment and explain how all process variables and emissions factors were selected.

Company: EOG Resources, Inc. Facility: Mary's Draw 412-1527H, Mary's Draw 411-15H
EU Type: Tank BUID: T1 (6532)

Greenhouse Gases (GHGs)

Greenhouse Gases (GHGs)						
		Efficiency Stds.				
Pollutant	Pre-Controlled Potential Emissions (tons/yr)	Potential to Emit (PTE)*	Units*	Potential to Emit (lbs/hr)*	Potential to Emit (tons/yr)*	Basis for Determinatio n*
Carbon Dioxide	0.03			0.00	0.00	ProMax
Methane	0.07			0.00	0.00	ProMax

*Provide your calculations as an attachment and explain how all process variables and emissions factors were selected.

Process Flow Diagram:

Attach a Process Flow Diagram to this application for this emission unit.

Have you attached a process diagram? Yes

Best Available Control Technology (BACT):

Is this Emissions Unit subject to BACT? No

Was a BACT Analysis completed for this emission unit? No

Have you attached a BACT analysis? No

Pollutant(s):

Proposed BACT: Presumptive BACT

Lowest Achievable Emission Rate (LAER):

Is Emissions Unit subjcet to LAER? No

Was LAER Analysis completed for emission unit? No

Pollutant(s):

Proposed LAER:

Federal and State Rule Applicability:

New Source Performance Standard are listed under 40 CFR 60- Standards of Performance for New Stationary Sources.

New Source Performance Standards (NSPS): Not Affected

If applicable, list NSPS Subpart(s):

National Emissions Standards for Hazardous Air Pollutants (NESHAP Part 61) are listed under 40 CFR 61. (These include asbestos, benzene, beryllium, mercury, and vinyl chloride).

National Emission Standards for Hazardous Air Pollutants (NESHAP Part 61): Not Affected

If applicable, list Part 61 NESHAP Subpart(s):

National Emission Standards for Hazardous Air Pollutants (NESHAP Part 63) standards are listed under 40 CFR 63

National Emission Standards for Hazardous Air Pollutants (NESHAP Part 63): Not Affected

If applicable, list Part 63 NESHAP Subpart(s):

These rules are found under WAQSR Chapter 6, Section 4.

Prevention of Significant Deterioration (PSD): Not Affected

These rules are found under WAQSR Chapter 6, Section 13.

Non-Attainment New Source Review: Not Affected

Company: EOG Resources, Inc. Facility: Mary's Draw 412-1527H, Mary's Draw 411-15H
EU Type: Tank EUID: T1 (6532)

Emissions Unit Specific Information

Material Type:	Liquid		
Description of Material Stored:	Crude Oil		
Capacity:	400	Units:	barrels
Maximum Throughput:	376.9	Units:	barrels/day
Maximum Hourly Throughput:	15.7	Units:	barrels/hr

Is Tank Heated? No

Information Specific to Storage Tanks or Silos that Contain Liquids

Enter information below, if Material Type = Liquid

Operating Pressure (psig): atmospheric

Vapor Pressure of Material Stored (psig):

Control Equipment:

Does this emission unit employ emissions control equipment? Yes

Yes- fill out the applicable information below.

No- Go to Release Point Section.

Flare

Is this the only Control Equipment for this emissions unit? Yes

If > 1 control for this emissions unit, then this control equipment is:

Are other emission units vented to this control equipment? Yes

If other emission units are vented to this control equipment, List them below:

Five oil tanks, two produced water tanks, one emergency tank, and one vapor recovery tower

List all release point IDs associated with this control equipment below

Flare FL1

Manufacturer: Steffes

Model Name and Number: 5462146

Date Installed: 9/20/2014

Company Control Equipment ID:

Company Control Equipment Description: EOG =BE4766 15 ft. flare with 3 in/4 in diameter with pilot flame

Ignition Device: Yes

Flame Presence Sensor: Yes

Flame Presence Type: Thermocouple

Inlet Gas Temp (F): 143

Inlet Gas Flow Rate (acfm): 3271.02

Outlet Gas Temp (F): 1400

Outlet Gas Flow Rate (acfm):

Pollutants Controlled

Pollutants Controlled				
Pollutant	In Control? (yes/no)	Design Control Efficiency (%):	Capture Efficiency (%):	Operating Control Efficiency (%):
VOC - Volatile Organic Compounds	Yes	98.00%	100.00%	98.00%
HAPS - Total Combined Hazardous Air Pollutants	Yes	98.00%	100.00%	98.00%

Company: EOG Resources, Inc. Facility: Mary's Draw 412-1527H, Mary's Draw 411-15H
EU Type: Tank EUID: T1 (6532)

Horizontal or Vertical Release Point Information:

Vertical Or Horizontal Release Point 1	
Company Release Point ID:	Flare FL 1
Company Release Point Description	Flare Stack
Release Point Type:	Vertical
For longitude and latitude, use NAD 83/WGS84 datum	
Release Point Latitude (5 digits to right of decimal pt.):	43.43606
Release Point Longitude (5 digits to right of decimal pt.):	-105.48730
Base Elevation (ft):	4780
Stack Height (ft):	15
Stack Diameter (ft):	0.25 and 0.33
Exit Gas Velocity (ft/s):	65
Exit Gas Temp (F):	1400
Exit Gas Flow Rate (acfm):	

Company: BOG Resources, Inc. Facility: Mary's Draw 412-1527H, Mary's Draw 411-15H
EU Type: Tank EUID: T2 (6533)

Emission Unit Type:	Tank	Date of Application:	12/22/2014
AQD Emission Unit ID:		EU ID used by Company:	T2 (6533)
Emission Unit Description Used by Company:	Oil Tank 6533 =AB0053-400 bbl		

Emission Unit Installation or Modification Schedule-*Select reason(s) for this emissions unit being included in this application (must be completed regardless of date of installation or modification) and the date associated with the EU installation of Modification Schedule:*

Reason: Construction (greenfield/new facility)

*If Reason = **Construction (greenfield/new facility)**, enter date contruction began:*	Date: 9/20/2014
*If Reason = **Synthetic Minor**, enter date emissions unit became new synthetic minor:*	Date:
*If Reason = **Modification**, enter modification date or date modification began:*	Date:
*If Reason = **Temporary Permit**, enter beginning date for temporary permit:*	Date:
*If Reason = **Reconstruction**, enter beginning date for reconstruction:*	Date:

If the Reason is: **Reconstruction** *or* ***Temporary Permit*** *or* **Other** *please explain below:*

*Oil and Gas Production Site **ONLY***

if Reason = **Construction (greenfield/new facility)** will production commence after permit is issued?	NO
if previous question's answer is No" (production not waiting until after permit), then provide first date of production:	Date: 9/24/2014

List in the area below any previous NSR permit numbers for air contaminant sources included in this application, if applicable, and describe the requested modification. Attach an additional sheet if necessary:

N/A

SCC Codes

Enter SCC for each process. Enter at least one SCC Code. Click to see SCC Code List

Enter SCC Code		*SCC Short Name*	Sec Level 4 Name
SCC Code 1 (Required Field):	2310011020	On-Shore Oil Production /Storage Tanks: Crude Oil	Storage Tanks: Crude Oil
SCC Code 2 (as needed):			
SCC Code 3 (as needed):			

General Emission Unit Dates

Initial Construction Commencement Date:	9/20/2014
Initial Operation Commencement Date:	9/24/2014
Most Recent Construction/ Modification Commencement Date:	
Most Recent Operation Commencement Date:	

Potential Operating Schedule:

Provide the operating schedule for this emission unit.

Hours/day:	24
Hours/year:	8760

Company: EOG Resources, Inc. Facility: Mary's Draw 412-1527H, Mary's Draw 411-15H
EU Type: Tank EUID: T2 (6533)

Criteria Pollutants

The following tables request information that is needed to determine the applicable requirements and the compliance status of this emission unit with those requirements.

Criteria Pollutants						
		Efficiency Stds.				
Pollutant	**Pre-Controlled Potential Emissions (tons/yr)**	**Potential to Emit (PTE)***	**Units***	**Potential to Emit (lbs/hr)***	**Potential to Emit (tons/yr)***	**Basis for Determination ***
Particulate emissions (PE/PM) (formerly particulate matter)						
PM =10 microns in diameter (PE/PM10)						
PM =2.5 microns in diameter (PE/PM2.5)						
Sulfur dioxide (SO2)						
Nitrogen Oxides (Nox)						
Carbon monoxide (CO)						
Volatile organic compounds (VOC)	1.34			0.01	0.03	ProMax
Lead (Pb)						
Tota Hazardous Air Pollutants (HAPs)	0.01			0.00	0.00	ProMax
Fluoride (F)						
Hydrogen Sulfide (H2S)						
Mercury (Hg)						
Total Reduced Sulfur (TRS)						
Sulfuric Acid Mist (SAM)						

*Provide your calculations as an attachment and explain how all process variables and emissions factors were selected.

Hazardous Air Pollutants (HAPs) and Toxic Air Contaminants

Hazardous Air Pollutants (HAPs) and Toxic Air Contaminants						
		Efficiency Stds.				
Pollutant	**Pre-Controlled Potential Emissions (tons/yr)**	**Potential to Emit (PTE)***	**Units***	**Potential to Emit (lbs/hr)***	**Potential to Emit (tons/yr)***	**Basis for Determination ***
Benzene	9.19E-06			4.20E-08	1.84E-07	ProMax
Toluene	0.01			2.98E-05	1.31E-04	ProMax
Ethylbenzene	0.00			1.51E-06	6.61E-06	ProMax
Xylenes	0.00			3.99E-06	1.75E-05	ProMax
n-Hexane	0.00			1.43E-05	6.25E-05	ProMax
2,2,4-Trimethylpentane	0.00			8.24E-06	3.61E-05	ProMax

*Provide your calculations as an attachment and explain how all process variables and emissions factors were selected.

Company: EOG Resources, Inc. Facility: Mary's Draw 412-1527H, Mary's Draw 411-15H
EU Type: Tank EUID: T2 (6533)

Greenhouse Gases (GHGs)

Greenhouse Gases (GHGs)						
		Efficiency Stds.				
Pollutant	Pre-Controlled Potential Emissions (tons/yr)	Potential to Emit (PTE)*	Units*	Potential to Emit (lbs/hr)*	Potential to Emit (tons/yr)*	Basis for Determination *
Carbon Dioxide	0.03			0.00	0.00	ProMax
Methane	0.07			0.00	0.00	ProMax
*Provide your calculations as an attachment and explain how all process variables and emissions factors were selected.						

Process Flow Diagram:

Attach a Process Flow Diagram to this application for this emission unit.

Have you attached a process diagram? Yes

Best Available Control Technology (BACT):

Is this Emissions Unit subject to BACT? No

Was a BACT Analysis completed for this emission unit? No

Have you attached a BACT analysis? No

Pollutant(s):

Proposed BACT: Presumptive BACT

Lowest Achievable Emission Rate (LAER):

Is Emissions Unit subject to LAER? No

Was LAER Analysis completed for emission unit? No

Pollutant(s):

Proposed LAER:

Federal and State Rule Applicability:

New Source Performance Standard are listed under 40 CFR 60- Standards of Performance for New Stationary Sources.

New Source Performance Standards (NSPS): Not Affected

If applicable, list NSPS Subpart(s):

National Emissions Standards for Hazardous Air Pollutants (NESHAP Part 61) are listed under 40 CFR 61. (These include asbestos, benzene, beryllium, mercury, and vinyl chloride).

National Emission Standards for Hazardous Air Pollutants (NESHAP Part 61): Not Affected

If applicable, list Part 61 NESHAP Subpart(s):

National Emission Standards for Hazardous Air Pollutants (NESHAP Part 63) standards are listed under 40 CFR 63

National Emission Standards for Hazardous Air Pollutants (NESHAP Part 63): Not Affected

If applicable, list Part 63 NESHAP Subpart(s):

These rules are found under WAQSR Chapter 6, Section 4.

Prevention of Significant Deterioration (PSD): Not Affected

These rules are found under WAQSR Chapter 6, Section 13.

Non-Attainment New Source Review: Not Affected

Company: EOG Resources, Inc. Facility: Mary's Draw 412-1527H, Mary's Draw 411-15H
EU Type: Tank EUID: T2 (6533)

Emissions Unit Specific Information

Material Type:	Liquid		
Description of Material Stored:	Crude Oil		
Capacity:	400	Units:	barrels
Maximum Throughput:	376.9	Units:	barrels/day
Maximum Hourly Throughput:	15.7	Units:	barrels/hr

Is Tank Heated?: No

Information Specific to Storage Tanks or Silos that Contain Liquids

Enter information below, if Material Type = Liquid

Operating Pressure (psig): atmospheric

Vapor Pressure of Material Stored (psig):

Control Equipment:

Does this emission unit employ emissions control equipment? Yes

Yes- fill out the applicable information below.

No- Go to Release Point Section.

Flare

Is this the only Control Equipment for this emissions unit? Yes

If > 1 control for this emissions unit, then this control equipment is:

Are other emission units vented to this control equipment? Yes

If other emission units are vented to this control equipment, List them below:

Five oil tanks, two produced water tanks, one emergency tank, and one vapor recovery tower

List all release point IDs associated with this control equipment below:

Flare FL1

Manufacturer: Steffes

Model Name and Number: 5462146

Date Installed: 9/20/2014

Company Control Equipment ID:

Company Control Equipment Description: EOG =BE4766 15 ft. flare with 3 in/4 in diameter with pilot flame

Ignition Device: Yes

Flame Presence Sensor: Yes

Flame Presence Type: Thermocouple

Inlet Gas Temp (F): 143

Inlet Gas Flow Rate (acfm): 3271.02

Outlet Gas Temp (F): 1400

Outlet Gas Flow Rate (acfm):

Pollutants Controlled

Pollutants Controlled				
Pollutant	In Control? (yes/no)	Design Control Efficiency (%):	Capture Efficiency (%):	Operating Control Efficiency (%):
Compounds	Yes	98.00%	100.00%	98.00%
Hazardous Air Pollutants	Yes	98.00%	100.00%	98.00%

Company: EOG Resources, Inc. Facility: Mary's Draw 412-1527H, Mary's Draw 411-15H
EU Type: Tank EUID: T2 (6533)

Horizontal or Vertical Release Point Information:

Vertical Or Horizontal Release Point 1	
Company Release Point ID:	Flare FL 1
Company Release Point Description:	Flare Stack
Release Point Type:	Vertical
For longitude and latitude, use NAD 83/WGS84 datum	
Release Point Latitude (5 digits to right of decimal pt.):	43.43606
Release Point Longitude (5 digits to right of decimal pt.):	-105.48730
Base Elevation (ft):	4780
Stack Height (ft):	15
Stack Diameter (ft):	0.25 and 0.33
Exit Gas Velocity (ft/s):	65
Exit Gas Temp (F):	1400
Exit Gas Flow Rate (acfm):	

Company: BOG Resources, Inc. Facility: Mary's Draw 412-1527H, Mary's Draw 411-15H
EU Type: Tank EUID: T3 (6534)

Emission Unit Type:	Tank	Date of Application:	12/22/2014
AQD Emission Unit ID:		EU ID used by Company:	T3 (6534)
Emission Unit Description Used by Company:	Oil Tank 6534 =AB0078-400 bbl		

Emission Unit Installation or Modification Schedule-*Select reason(s) for this emissions unit being included in this application (must be completed regardless of date of installation or modification) and the date associated with the EU Installation of Modification Schedule:*

Reason: Construction (greenfield/new facility)

*If Reason = **Construction (greenfield/new facility)**, enter date contruction began:*	Date: 9/20/2014
*If Reason = **Synthetic Minor**, enter date emissions unit became new synthetic minor:*	Date:
*If Reason = **Modification**, enter modification date or date modification began:*	Date:
*If Reason = **Temporary Permit**, enter beginning date for temporary permit:*	Date:
*If Reason = **Reconstruction**, enter beginning date for reconstruction:*	Date:

If the Reason is: **Reconstruction** *or* ***Temporary Permit*** *or* **Other** *please explain below:*

*Oil and Gas Production Site **ONLY***

if Reason = **Construction (greenfield/new facility)** will production commence after permit is issued?	NO
if previous question's answer is No" (production not waiting until after permit), then provide first date of production:	Date: 9/24/2014

List in the area below any previous NSR permit numbers for air contaminant sources included in this application, if applicable, and describe the requested modification. Attach an additional sheet if necessary:

N/A

SCC Codes

Enter SCC for each process. Enter at least one SCC Code. Click to see SCC Code List

Enter SCC Code		*SCC Short Name*	Scc Level 4 Name
SCC Code 1 (Required Field):	2310011020	On-Shore Oil Production /Storage Tanks: Crude Oil	Storage Tanks: Crude Oil
SCC Code 2 (as needed):			
SCC Code 3 (as needed):			

General Emission Unit Dates

Initial Construction Commencement Date:	9/20/2014
Initial Operation Commencement Date:	9/24/2014
Most Recent Construction/ Modification Commencement Date:	
Most Recent Operation Commencement Date:	

Potential Operating Schedule:

Provide the operating schedule for this emission unit.

Hours/day:	24
Hours/year:	8760

Company: EOG Resources, Inc. Facility: Mary's Draw 412-1527H, Mary's Draw 411-15H
EU Type: Tank EUID: T3 (6534)

Criteria Pollutants

The following tables request information that is needed to determine the applicable requirements and the compliance status of this emission unit with those requirements.

Criteria Pollutants						
		Efficiency Stds.				
Pollutant	Pre-Controlled Potential Emissions (tons/yr)	Potential to Emit (PTE)*	Units*	Potential to Emit (lbs/hr)*	Potential to Emit (tons/yr)*	Basis for Determination *
Particulate emissions (PE/PM) (formerly particulate matter)						
PM =10 microns in diameter (PE/PM10)						
PM =2.5 microns in diameter (PE/PM2.5)						
Sulfur dioxide (SO2)						
Nitrogen Oxides (Nox)						
Carbon monoxide (CO)						
Volatile organic compounds (VOC)	1.34			0.01	0.03	ProMax
Lead (Pb)						
Tota Hazardous Air Pollutants (HAPs)	0.01			0.00	0.00	ProMax
Fluoride (F)						
Hydrogen Sulfide (H2S)						
Mercury (Hg)						
Total Reduced Sulfur (TRS)						
Sulfuric Acid Mist (SAM)						

*Provide your calculations as an attachment and explain how all process variables and emissions factors were selected.

Hazardous Air Pollutants (HAPs) and Toxic Air Contaminants

Hazardous Air Pollutants (HAPs) and Toxic Air Contaminants						
		Efficiency Stds.				
Pollutant	Pre-Controlled Potential Emissions (tons/yr)	Potential to Emit (PTE)*	Units*	Potential to Emit (lbs/hr)*	Potential to Emit (tons/yr)*	Basis for Determination *
Benzene	9.19E-06			4.20E-08	1.84E-07	ProMax
Toluene	0.01			2.98E-05	1.31E-04	ProMax
Ethylbenzene	0.00			1.51E-06	6.61E-06	ProMax
Xylenes	0.00			3.99E-06	1.75E-05	ProMax
n-Hexane	0.00			1.43E-05	6.25E-05	ProMax
2,2,4-Trimethylpentane	0.00			8.24E-06	3.61E-05	ProMax

*Provide your calculations as an attachment and explain how all process variables and emissions factors were selected.

Company: BOG Resources, Inc. Facility: Mary's Draw 412-1527H, Mary's Draw 411-15H
EU Type: Tank EUID: T3 (6534)

Greenhouse Gases (GHGs)

Greenhouse Gases (GHGs)						
		Efficiency Stds.				
Pollutant	Pre-Controlled Potential Emissions (tons/yr)	Potential to Emit (PTE)*	Units*	Potential to Emit (lbs/hr)*	Potential to Emit (tons/yr)*	Basis for Determination *
Carbon Dioxide	0.03			0.00	0.00	ProMax
Methane	0.07			0.00	0.00	ProMax

*Provide your calculations as an attachment and explain how all process variables and emissions factors were selected.

Process Flow Diagram:

Attach a Process Flow Diagram to this application for this emission unit.

Have you attached a process diagram? Yes

Best Available Control Technology (BACT):

Is this Emissions Unit subject to BACT? No

Was a BACT Analysis completed for this emission unit? No

Have you attached a BACT analysis? No

Pollutant(s):

Proposed BACT: Presumptive BACT

Lowest Achievable Emission Rate (LAER):

Is Emissions Unit subject to LAER? No

Was LAER Analysis completed for emission unit? No

Pollutant(s):

Proposed LAER:

Federal and State Rule Applicability:

New Source Performance Standard are listed under 40 CFR 60- Standards of Performance for New Stationary Sources.

New Source Performance Standards (NSPS): Not Affected

If applicable, list NSPS Subpart(s):

National Emissions Standards for Hazardous Air Pollutants (NESHAP Part 61) are listed under 40 CFR 61. (These include asbestos, benzene, beryllium, mercury, and vinyl chloride).

National Emission Standards for Hazardous Air Pollutants (NESHAP Part 61): Not Affected

If applicable, list Part 61 NESHAP Subpart(s):

National Emission Standards for Hazardous Air Pollutants (NESHAP Part 63) standards are listed under 40 CFR 63

National Emission Standards for Hazardous Air Pollutants (NESHAP Part 63): Not Affected

If applicable, list Part 63 NESHAP Subpart(s):

These rules are found under WAQSR Chapter 6, Section 4.

Prevention of Significant Deterioration (PSD): Not Affected

These rules are found under WAQSR Chapter 6, Section 13.

Non-Attainment New Source Review: Not Affected

Company: EOG Resources, Inc. Facility: Mary's Draw 412-1527H, Mary's Draw 411-15H
EU Type: Tank EUID: T3 (6534)

Emissions Unit Specific Information

Material Type:	Liquid		
Description of Material Stored:	Crude Oil		
Capacity:	400	Units:	barrels
Maximum Throughput:	376.9	Units:	barrels/day
Maximum Hourly Throughput:	15.7	Units:	barrels/hr

Is Tank Heated?: No

Information Specific to Storage Tanks or Silos that Contain Liquids

Enter information below, if Material Type = Liquid

Operating Pressure (psig): atmospheric

Vapor Pressure of Material Stored (psig):

Control Equipment:

Does this emission unit employ emissions control equipment? Yes

Yes- fill out the applicable information below.

No- Go to Release Point Section.

Flare

Is this the only Control Equipment for this emissions unit? Yes

If > 1 control for this emissions unit, then this control equipment is:

Are other emission units vented to this control equipment? Yes

If other emission units are vented to this control equipment, List them below:

Five oil tanks, two produced water tanks, one emergency tank, and one vapor recovery tower

List all release point IDs associated with this control equipment below:

Flare FL1

Manufacturer: Steffes

Model Name and Number: 5462146

Date Installed: 9/20/2014

Company Control Equipment ID:

Company Control Equipment Description: EOG =BE4766 15 ft. flare with 3 in/4 in diameter with pilot flame

Ignition Device: Yes

Flame Presence Sensor: Yes

Flame Presence Type: Thermocouple

Inlet Gas Temp (F): 143

Inlet Gas Flow Rate (acfm): 3271.02

Outlet Gas Temp (F): 1400

Outlet Gas Flow Rate (acfm):

Pollutants Controlled

Pollutants Controlled				
Pollutant	In Control? (yes/no)	Design Control Efficiency (%):	Capture Efficiency (%):	Operating Control Efficiency (%):
Compounds	Yes	98.00%	100.00%	98.00%
Hazardous Air Pollutants	Yes	98.00%	100.00%	98.00%

Company: EOG Resources, Inc. Facility: Mary's Draw 412-1527H, Mary's Draw 411-15H
EU Type: Tank EUID: T3 (6534)

Horizontal or Vertical Release Point Information:

Vertical Or Horizontal Release Point 1	
Company Release Point ID:	Flare FL 1
Company Release Point Description:	Flare Stack
Release Point Type:	Vertical
For longitude and latitude, use NAD 83/WGS84 datum	
Release Point Latitude (5 digits to right of decimal pt.):	43.43606
Release Point Longitude (5 digits to right of decimal pt.):	-105.48730
Base Elevation (ft):	4780
Stack Height (ft):	15
Stack Diameter (ft):	0.25 and 0.33
Exit Gas Velocity (ft/s):	65
Exit Gas Temp (F):	1400
Exit Gas Flow Rate (acfm):	

Company: EOG Resources, Inc. Facility: Mary's Draw 412-1527H, Mary's Draw 411-15H
EU Type: Tank EUID: T4 (6535)

Emission Unit Type:	Tank	Date of Application:	12/22/2014
AQD Emission Unit ID:		EU ID used by Company:	T4 (6535)
Emission Unit Description Used by Company:	Oil Tank 6535=AB0076-400 bbl		

Emission Unit Installation or Modification Schedule-*Select reason(s) for this emissions unit being included in this application (must be completed regardless of date of installation or modification) and the date associated with the EU Installation of Modification Schedule:*

Reason: Construction (greenfield/new facility)

*If Reason = **Construction (greenfield/new facility)**, enter date contruction began:*	Date: 9/20/2014
*If Reason = **Synthetic Minor**, enter date emissions unit became new synthetic minor:*	Date:
*If Reason = **Modification**, enter modification date or date modification began:*	Date:
*If Reason = **Temporary Permit**, enter beginning date for temporary permit:*	Date:
*If Reason = **Reconstruction**, enter beginning date for reconstruction:*	Date:

If the Reason is: **Reconstruction** *or* ***Temporary Permit*** *or* **Other** *please explain below:*

*Oil and Gas Production Site **ONLY***

if Reason = **Construction (greenfield/new facility)** will production commence after permit is issued?	NO
if previous question's answer is No" (production not waiting until after permit), then provide first date of production:	Date: 9/24/2014

List in the area below any previous NSR permit numbers for air contaminant sources included in this application, if applicable, and describe the requested modification. Attach an additional sheet if necessary:

N/A

SCC Codes

Enter SCC for each process. Enter at least one SCC Code. Click to see SCC Code List

Enter SCC Code		*SCC Short Name*	Sce Level 4 Name
SCC Code 1 (Required Field):	2310011020	On-Shore Oil Production /Storage Tanks: Crude Oil	Storage Tanks: Crude Oil
SCC Code 2 (as needed):			
SCC Code 3 (as needed):			

General Emission Unit Dates

Initial Construction Commencement Date:	9/20/2014
Initial Operation Commencement Date:	9/24/2014
Most Recent Construction/ Modification Commencement Date:	
Most Recent Operation Commencement Date:	

Potential Operating Schedule:

Provide the operating schedule for this emission unit.

Hours/day:	24
Hours/year:	8760

Company: EOG Resources, Inc. Facility: Mary's Draw 412-1527H, Mary's Draw 411-15H
EU Type: Tank BUID: T4 (6535)

Criteria Pollutants

The following tables request information that is needed to determine the applicable requirements and the compliance status of this emission unit with those requirements.

Criteria Pollutants						
		Efficiency Stds.				
Pollutant	**Pre-Controlled Potential Emissions (tons/yr)**	**Potential to Emit (PTE)***	**Units***	**Potential to Emit (lbs/hr)***	**Potential to Emit (tons/yr)***	**Basis for Determination ***
Particulate emissions (PE/PM) (formerly particulate matter)						
PM =10 microns in diameter (PE/PM10)						
PM =2.5 microns in diameter (PE/PM2.5)						
Sulfur dioxide (SO2)						
Nitrogen Oxides (Nox)						
Carbon monoxide (CO)						
Volatile organic compounds (VOC)	1.34			0.01	0.03	ProMax
Lead (Pb)						
Tota Hazardous Air Pollutants (HAPs)	0.01			0.00	0.00	ProMax
Fluoride (F)						
Hydrogen Sulfide (H2S)						
Mercury (Hg)						
Total Reduced Sulfur (TRS)						
Sulfuric Acid Mist (SAM)						

*Provide your calculations as an attachment and explain how all process variables and emissions factors were selected.

Hazardous Air Pollutants (HAPs) and Toxic Air Contaminants

Hazardous Air Pollutants (HAPs) and Toxic Air Contaminants						
		Efficiency Stds.				
Pollutant	**Pre-Controlled Potential Emissions (tons/yr)**	**Potential to Emit (PTE)***	**Units***	**Potential to Emit (lbs/hr)***	**Potential to Emit (tons/yr)***	**Basis for Determination ***
Benzene	9.19E-06			4.20E-08	1.84E-07	ProMax
Toluene	0.01			2.98E-05	1.31E-04	ProMax
Ethylbenzene	0.00			1.51E-06	6.61E-06	ProMax
Xylenes	0.00			3.99E-06	1.75E-05	ProMax
n-Hexane	0.00			1.43E-05	6.25E-05	ProMax
2,2,4-Trimethylpentane	0.00			8.24E-06	3.61E-05	ProMax

*Provide your calculations as an attachment and explain how all process variables and emissions factors were selected.

Company: BOG Resources, Inc. Facility: Mary's Draw 412-1527H, Mary's Draw 411-15H
EU Type: Tank EUID: T4 (6535)

Greenhouse Gases (GHGs)

Greenhouse Gases (GHGs)						
		Efficiency Stds.				
Pollutant	Pre-Controlled Potential Emissions (tons/yr)	Potential to Emit (PTE)*	Units*	Potential to Emit (lbs/hr)*	Potential to Emit (tons/yr)*	Basis for Determination *
Carbon Dioxide	0.03			0.00	0.00	ProMax
Methane	0.07			0.00	0.00	ProMax

*Provide your calculations as an attachment and explain how all process variables and emissions factors were selected.

Process Flow Diagram:

Attach a Process Flow Diagram to this application for this emission unit.

Have you attached a process diagram? Yes

Best Available Control Technology (BACT):

Is this Emissions Unit subject to BACT? No

Was a BACT Analysis completed for this emission unit? No

Have you attached a BACT analysis? No

Pollutant(s):

Proposed BACT: Presumptive BACT

Lowest Achievable Emission Rate (LAER):

Is Emissions Unit subject to LAER? No

Was LAER Analysis completed for emission unit? No

Pollutant(s):

Proposed LAER:

Federal and State Rule Applicability:

New Source Performance Standard are listed under 40 CFR 60- Standards of Performance for New Stationary Sources.

New Source Performance Standards (NSPS): Not Affected

If applicable, list NSPS Subpart(s):

National Emissions Standards for Hazardous Air Pollutants (NESHAP Part 61) are listed under 40 CFR 61. (These include asbestos, benzene, beryllium, mercury, and vinyl chloride).

National Emission Standards for Hazardous Air Pollutants (NESHAP Part 61): Not Affected

If applicable, list Part 61 NESHAP Subpart(s):

National Emission Standards for Hazardous Air Pollutants (NESHAP Part 63) standards are listed under 40 CFR 63

National Emission Standards for Hazardous Air Pollutants (NESHAP Part 63): Not Affected

If applicable, list Part 63 NESHAP Subpart(s):

These rules are found under WAQSR Chapter 6, Section 4.

Prevention of Significant Deterioration (PSD): Not Affected

These rules are found under WAQSR Chapter 6, Section 13.

Non-Attainment New Source Review: Not Affected

Company: BOG Resources, Inc. Facility: Mary's Draw 412-1527H, Mary's Draw 411-15H
EU Type: Tank EUID: T4 (6535)

Emissions Unit Specific Information

Material Type:	Liquid		
Description of Material Stored:	Crude Oil		
Capacity:	400	Units:	barrels
Maximum Throughput:	376.9	Units:	barrels/day
Maximum Hourly Throughput:	15.7	Units:	barrels/hr

Is Tank Heated?: No

Information Specific to Storage Tanks or Silos that Contain Liquids

Enter information below, if Material Type = Liquid

Operating Pressure (psig): atmospheric

Vapor Pressure of Material Stored (psig):

Control Equipment:

Does this emission unit employ emissions control equipment? Yes

Yes- fill out the applicable information below.

No- Go to Release Point Section.

Flare

Is this the only Control Equipment for this emissions unit? Yes

If > 1 control for this emissions unit, then this control equipment is:

Are other emission units vented to this control equipment? Yes

If other emission units are vented to this control equipment, List them below:

Five oil tanks, two produced water tanks, one emergency tank, and one vapor recovery tower

List all release point IDs associated with this control equipment below:

Flare FL1

Manufacturer: Steffes

Model Name and Number: 5462146

Date Installed: 9/20/2014

Company Control Equipment ID:

Company Control Equipment Description: BOG =BE4766 15 ft. flare with 3 in/4 in diameter with pilot flame

Ignition Device: Yes

Flame Presence Sensor: Yes

Flame Presence Type: Thermocouple

Inlet Gas Temp (F): 143

Inlet Gas Flow Rate (acfm): 3271.02

Outlet Gas Temp (F): 1400

Outlet Gas Flow Rate (acfm):

Pollutants Controlled

Pollutants Controlled				
Pollutant	In Control? (yes/no)	Design Control Efficiency (%):	Capture Efficiency (%):	Operating Control Efficiency (%):
Compounds	Yes	98.00%	100.00%	98.00%
Hazardous Air Pollutants	Yes	98.00%	100.00%	98.00%

Company: EOG Resources, Inc. Facility: Mary's Draw 412-1527H, Mary's Draw 411-15H
EU Type: Tank EUID: T4 (6535)

Horizontal or Vertical Release Point Information:

Vertical Or Horizontal Release Point 1	
Company Release Point ID:	Flare FL 1
Company Release Point Description:	Flare Stack
Release Point Type:	Vertical
For longitude and latitude, use NAD 83/WGS84 datum	
Release Point Latitude (5 digits to right of decimal pt.):	43.43606
Release Point Longitude (5 digits to right of decimal pt.):	-105.48730
Base Elevation (ft):	4780
Stack Height (ft):	15
Stack Diameter (ft):	0.25 and 0.33
Exit Gas Velocity (ft/s):	65
Exit Gas Temp (F):	1400
Exit Gas Flow Rate (acfm):	

Company: EOG Resources, Inc. Facility: Mary's Draw 412-1527H, Mary's Draw 411-15H
EU Type: Tank EUID: T5(6536)

Emission Unit Type:	Tank	Date of Application:	12/22/2014
AQD Emission Unit ID:		EU ID used by Company:	T5(6536)
Emission Unit Description Used by Company:	Oil Tank 6536=AB0233-400 bbl		

Emission Unit Installation or Modification Schedule-*Select reason(s) for this emissions unit being included in this application (must be completed regardless of date of installation or modification) and the date associated with the EU Installation of Modification Schedule:*

Reason: Construction (greenfield/new facility)

If Reason = ***Construction (greenfield/new facility)****, enter date contruction began:*	Date:	9/20/2014
If Reason = ***Synthetic Minor****, enter date emissions unit became new synthetic minor:*	Date:	
If Reason = ***Modification****, enter modification date or date modification began:*	Date:	
If Reason = ***Temporary Permit****, enter beginning date for temporary permit:*	Date:	
If Reason = ***Reconstruction****, enter beginning date for reconstruction:*	Date:	

If the Reason is: **Reconstruction** *or* ***Temporary Permit*** *or* **Other** *please explain below:*

Oil and Gas Production Site ***ONLY***

if Reason = **Construction (greenfield/new facility)** will production commence after permit is issued?		NO
if previous question's answer is No" (production not waiting until after permit), then provide first date of production:	Date:	9/24/2014

List in the area below any previous NSR permit numbers for air contaminant sources included in this application, if applicable, and describe the requested modification. Attach an additional sheet if necessary:

N/A

SCC Codes

Enter SCC for each process. Enter at least one SCC Code. Click to see SCC Code List

Enter SCC Code		*SCC Short Name*	Scc Level 4 Name
SCC Code 1 (Required Field):	2310011020	On-Shore Oil Production /Storage Tanks: Crude Oil	Storage Tanks: Crude Oil
SCC Code 2 (as needed):			
SCC Code 3 (as needed):			

General Emission Unit Dates

Initial Construction Commencement Date:	9/20/2014
Initial Operation Commencement Date:	9/24/2014
Most Recent Construction/ Modification Commencement Date:	
Most Recent Operation Commencement Date:	

Potential Operating Schedule:

Provide the operating schedule for this emission unit.

Hours/day:	24
Hours/year:	8760

Company: EOG Resources, Inc. Facility: Mary's Draw 412-1527H, Mary's Draw 411-15H
EU Type: Tank EUID: T5(6536)

Criteria Pollutants

The following tables request information that is needed to determine the applicable requirements and the compliance status of this emission unit with those requirements.

Criteria Pollutants						
		Efficiency Stds.				
Pollutant	Pre-Controlled Potential Emissions (tons/yr)	Potential to Emit (PTE)*	Units*	Potential to Emit (lbs/hr)*	Potential to Emit (tons/yr)*	Basis for Determination *
Particulate emissions (PE/PM) (formerly particulate matter)						
PM =10 microns in diameter (PE/PM10)						
PM =2.5 microns in diameter (PE/PM2.5)						
Sulfur dioxide (SO2)						
Nitrogen Oxides (Nox)						
Carbon monoxide (CO)						
Volatile organic compounds (VOC)	1.34			0.01	0.03	ProMax
Lead (Pb)						
Tota Hazardous Air Pollutants (HAPs)	0.01			0.00	0.00	ProMax
Fluoride (F)						
Hydrogen Sulfide (H2S)						
Mercury (Hg)						
Total Reduced Sulfur (TRS)						
Sulfuric Acid Mist (SAM)						

*Provide your calculations as an attachment and explain how all process variables and emissions factors were selected.

Hazardous Air Pollutants (HAPs) and Toxic Air Contaminants

Hazardous Air Pollutants (HAPs) and Toxic Air Contaminants						
		Efficiency Stds.				
Pollutant	Pre-Controlled Potential Emissions (tons/yr)	Potential to Emit (PTE)*	Units*	Potential to Emit (lbs/hr)*	Potential to Emit (tons/yr)*	Basis for Determination *
Benzene	9.19E-06			4.20E-08	1.84E-07	ProMax
Toluene	0.01			2.98E-05	1.31E-04	ProMax
Ethylbenzene	0.00			1.51E-06	6.61E-06	ProMax
Xylenes	0.00			3.99E-06	1.75E-05	ProMax
n-Hexane	0.00			1.43E-05	6.25E-05	ProMax
2,2,4-Trimethylpentane	0.00			8.24E-06	3.61E-05	ProMax

*Provide your calculations as an attachment and explain how all process variables and emissions factors were selected.

Company: BOG Resources, Inc. Facility: Mary's Draw 412-1527H, Mary's Draw 411-15H
EU Type: Tank EUID: T5(6536)

Greenhouse Gases (GHGs)

Greenhouse Gases (GHGs)						
		Efficiency Stds.				
Pollutant	Pre-Controlled Potential Emissions (tons/yr)	Potential to Emit (PTE)*	Units*	Potential to Emit (lbs/hr)*	Potential to Emit (tons/yr)*	Basis for Determination *
Carbon Dioxide	0.03			0.00	0.00	ProMax
Methane	0.07			0.00	0.00	ProMax

*Provide your calculations as an attachment and explain how all process variables and emissions factors were selected.

Process Flow Diagram:

Attach a Process Flow Diagram to this application for this emission unit.

Have you attached a process diagram? Yes

Best Available Control Technology (BACT):

Is this Emissions Unit subject to BACT? No

Was a BACT Analysis completed for this emission unit? No

Have you attached a BACT analysis? No

Pollutant(s):

Proposed BACT: Presumptive BACT

Lowest Achievable Emission Rate (LAER):

Is Emissions Unit subject to LAER? No

Was LAER Analysis completed for emission unit? No

Pollutant(s):

Proposed LAER:

Federal and State Rule Applicability:

New Source Performance Standard are listed under 40 CFR 60- Standards of Performance for New Stationary Sources.

New Source Performance Standards (NSPS): Not Affected

If applicable, list NSPS Subpart(s):

National Emissions Standards for Hazardous Air Pollutants (NESHAP Part 61) are listed under 40 CFR 61. (These include asbestos, benzene, beryllium, mercury, and vinyl chloride).

National Emission Standards for Hazardous Air Pollutants (NESHAP Part 61): Not Affected

If applicable, list Part 61 NESHAP Subpart(s):

National Emission Standards for Hazardous Air Pollutants (NESHAP Part 63) standards are listed under 40 CFR 63

National Emission Standards for Hazardous Air Pollutants (NESHAP Part 63): Not Affected

If applicable, list Part 63 NESHAP Subpart(s):

These rules are found under WAQSR Chapter 6, Section 4.

Prevention of Significant Deterioration (PSD): Not Affected

These rules are found under WAQSR Chapter 6, Section 13.

Non-Attainment New Source Review: Not Affected

Company: EOG Resources, Inc. Facility: Mary's Draw 412-1527H, Mary's Draw 411-15H
EU Type: Tank EUID: T5(6536)

Emissions Unit Specific Information

Material Type:	Liquid		
Description of Material Stored:	Crude Oil		
Capacity:	400	Units:	barrels
Maximum Throughput:	376.9	Units:	barrels/day
Maximum Hourly Throughput:	15.7	Units:	barrels/hr

Is Tank Heated?: No

Information Specific to Storage Tanks or Silos that Contain Liquids

Enter information below, if Material Type = Liquid

Operating Pressure (psig): atmospheric

Vapor Pressure of Material Stored (psig):

Control Equipment:

Does this emission unit employ emissions control equipment? Yes

Yes- fill out the applicable information below.

No- Go to Release Point Section.

Flare

Is this the only Control Equipment for this emissions unit? Yes

If > 1 control for this emissions unit, then this control equipment is:

Are other emission units vented to this control equipment? Yes

If other emission units are vented to this control equipment, List them below:

Five oil tanks, two produced water tanks, one emergency tank, and one vapor recovery tower

List all release point IDs associated with this control equipment below:

Flare FL1

Manufacturer: Steffes

Model Name and Number: 5462146

Date Installed: 9/20/2014

Company Control Equipment ID:

Company Control Equipment Description: EOG =BE4766 15 ft. flare with 3 in/4 in diameter with pilot flame

Ignition Device: Yes

Flame Presence Sensor: Yes

Flame Presence Type: Thermocouple

Inlet Gas Temp (F): 143

Inlet Gas Flow Rate (acfm): 3271.02

Outlet Gas Temp (F): 1400

Outlet Gas Flow Rate (acfm):

Pollutants Controlled

Pollutants Controlled				
Pollutant	In Control? (yes/no)	Design Control Efficiency (%):	Capture Efficiency (%):	Operating Control Efficiency (%):
Compounds	Yes	98.00%	100.00%	98.00%
Hazardous Air Pollutants	Yes	98.00%	100.00%	98.00%

Company: EOG Resources, Inc. Facility: Mary's Draw 412-1527H, Mary's Draw 411-15H
EU Type: Tank EUID: T5(6536)

Horizontal or Vertical Release Point Information:

Vertical Or Horizontal Release Point 1	
Company Release Point ID:	Flare FL 1
Company Release Point Description:	Flare Stack
Release Point Type:	Vertical
For longitude and latitude, use NAD 83/WGS84 datum	
Release Point Latitude (5 digits to right of decimal pt.):	43.43606
Release Point Longitude (5 digits to right of decimal pt.):	-105.48730
Base Elevation (ft):	4780
Stack Height (ft):	15
Stack Diameter (ft):	0.25 and 0.33
Exit Gas Velocity (ft/s):	65
Exit Gas Temp (F):	1400
Exit Gas Flow Rate (acfm):	

Company: EOG Resources, Inc. Facility: Mary's Draw 412-1527H, Mary's Draw 411-15H
EU Type: Tank EUID: T6 (W0588)

Emission Unit Type:	Tank	Date of Application:	12/22/2014
AQD Emission Unit ID:		EU ID used by Company:	T6 (W0588)
Emission Unit Description Used by Company:	Produced Water Tank W0588 =BE4760-400 bbl		

Emission Unit Installation or Modification Schedule-*Select reason(s) for this emissions unit being included in this application (must be completed regardless of date of installation or modification) and the date associated with the EU Installation of Modification Schedule:*

Reason: Construction (greenfield/new facility)

*If Reason = **Construction (greenfield/new facility)**, enter date contruction began:*	Date: 9/20/2014
*If Reason = **Synthetic Minor**, enter date emissions unit became new synthetic minor:*	Date:
*If Reason = **Modification**, enter modification date or date modification began:*	Date:
*If Reason = **Temporary Permit**, enter beginning date for temporary permit:*	Date:
*If Reason = **Reconstruction**, enter beginning date for reconstruction:*	Date:

If the Reason is: **Reconstruction** *or* ***Temporary Permit*** *or* **Other** *please explain below:*

*Oil and Gas Production Site **ONLY***

if Reason = **Construction (greenfield/new facility)** will production commence after permit is issued?	NO
if previous question's answer is No" (production not waiting until after permit), then provide first date of production:	Date: 9/24/2014

List in the area below any previous NSR permit numbers for air contaminant sources included in this application, if applicable, and describe the requested modification. Attach an additional sheet if necessary:

N/A

SCC Codes

Enter SCC for each process. Enter at least one SCC Code. Click to see SCC Code List

Enter SCC Code		*SCC Short Name*	See Level 4 Name
SCC Code 1 (Required Field):	2310000550	Oil & Gas Expl & Prod /All Processes /Produced Water	Produced Water
SCC Code 2 (as needed):			
SCC Code 3 (as needed):			

General Emission Unit Dates

Initial Construction Commencement Date:	9/20/2014
Initial Operation Commencement Date:	9/24/2014
Most Recent Construction/ Modification Commencement Date:	
Most Recent Operation Commencement Date:	

Potential Operating Schedule:

Provide the operating schedule for this emission unit.

Hours/day:	24
Hours/year:	8760

Company: EOG Resources, Inc. Facility: Mary's Draw 412-1527H, Mary's Draw 411-15H
EU Type: Tank BUID: T6 (W0588)

Criteria Pollutants

The following tables request information that is needed to determine the applicable requirements and the compliance status of this emission unit with those requirements.

Criteria Pollutants						
		Efficiency Stds.				
Pollutant	Pre-Controlled Potential Emissions (tons/yr)	Potential to Emit (PTE)*	Units*	Potential to Emit (lbs/hr)*	Potential to Emit (tons/yr)*	Basis for Determination *
Particulate emissions (PE/PM) (formerly particulate matter)						
PM =10 microns in diameter (PE/PM10)						
PM =2.5 microns in diameter (PE/PM2.5)						
Sulfur dioxide (SO2)						
Nitrogen Oxides (Nox)						
Carbon monoxide (CO)						
Volatile organic compounds (VOC)	0.22			0.00	0.00	ProMax
Lead (Pb)						
Tota Hazardous Air Pollutants (HAPs)	0.01			0.00	0.00	ProMax
Fluoride (F)						
Hydrogen Sulfide (H2S)						
Mercury (Hg)						
Total Reduced Sulfur (TRS)						
Sulfuric Acid Mist (SAM)						
*Provide your calculations as an attachment and explain how all process variables and emissions factors were selected.						

Hazardous Air Pollutants (HAPs) and Toxic Air Contaminants

Hazardous Air Pollutants (HAPs) and Toxic Air Contaminants						
		Efficiency Stds.				
Pollutant	Pre-Controlled Potential Emissions (tons/yr)	Potential to Emit (PTE)*	Units*	Potential to Emit (lbs/hr)*	Potential to Emit (tons/yr)*	Basis for Determination *
Benzene	1.32E-06			6.02E-09	2.64E-08	ProMax
Toluene	5.46E-03			2.5E-05	1.09E-04	ProMax
Ethylbenzene	3.57E-04			1.63E-06	7.14E-06	ProMax
Xylenes	8.58E-04			3.92E-06	1.72E-05	ProMax
n-Hexane	3.65E-03			1.67E-05	7.31E-05	ProMax
2,2,4-Trimethylpentane	4.80E-05			2.19E-07	9.6E-07	ProMax
*Provide your calculations as an attachment and explain how all process variables and emissions factors were selected.						

Greenhouse Gases (GHGs)

Company: EOG Resources, Inc. Facility: Mary's Draw 412-1527H, Mary's Draw 411-15H
EU Type: Tank BUID: T6 (W0588)

Greenhouse Gases (GHGs)						
		Efficiency Stds.				
Pollutant	Pre-Controlled Potential Emissions (tons/yr)	Potential to Emit (PTE)*	Units*	Potential to Emit (lbs/hr)*	Potential to Emit (tons/yr)*	Basis for Determination *
Carbon Dioxide	0.08			0.00	0.00	ProMax
Methane	0.32			0.00	0.01	ProMax
*Provide your calculations as an attachment and explain how all process variables and emissions factors were selected.						

Process Flow Diagram:

Attach a Process Flow Diagram to this application for this emission unit.

Have you attached a process diagram? Yes

Best Available Control Technology (BACT):

Is this Emissions Unit subject to BACT? No

Was a BACT Analysis completed for this emission unit? No

Have you attached a BACT analysis? No

Pollutant(s):

Proposed BACT: Presumptive BACT

Lowest Achievable Emission Rate (LAER):

Is Emissions Unit subject to LAER? No

Was LAER Analysis completed for emission unit? No

Pollutant(s):

Proposed LAER:

Federal and State Rule Applicability:

New Source Performance Standard are listed under 40 CFR 60- Standards of Performance for New Stationary Sources.

New Source Performance Standards (NSPS): Not Affected

If applicable, list NSPS Subpart(s):

National Emissions Standards for Hazardous Air Pollutants (NESHAP Part 61) are listed under 40 CFR 61. (These include asbestos, benzene, beryllium, mercury, and vinyl chloride).

National Emission Standards for Hazardous Air Pollutants (NESHAP Part 61): Not Affected

If applicable, list Part 61 NESHAP Subpart(s):

National Emission Standards for Hazardous Air Pollutants (NESHAP Part 63) standards are listed under 40 CFR 63

National Emission Standards for Hazardous Air Pollutants (NESHAP Part 63): Not Affected

If applicable, list Part 63 NESHAP Subpart(s):

These rules are found under WAQSR Chapter 6, Section 4.

Prevention of Significant Deterioration (PSD): Not Affected

These rules are found under WAQSR Chapter 6, Section 13.

Non-Attainment New Source Review: Not Affected

Company: EOG Resources, Inc. Facility: Mary's Draw 412-1527H, Mary's Draw 411-15H
EU Type: Tank EUID: T6 (W0588)

Emissions Unit Specific Information

Material Type: Liquid
Description of Material Stored: Produced Water
Capacity: 400 Units: barrels
Maximum Throughput: 253.7 Units: barrels/day
Maximum Hourly Throughput: 10.6 Units: barrels/hr

Is Tank Heated?: No

Information Specific to Storage Tanks or Silos that Contain Liquids

Enter information below, if Material Type = Liquid

Operating Pressure (psig): atmospheric
Vapor Pressure of Material Stored (psig):

Control Equipment:

Does this emission unit employ emissions control equipment? Yes

Yes- fill out the applicable information below.

No- Go to Release Point Section.

Flare

Is this the only Control Equipment for this emissions unit? Yes

If > 1 control for this emissions unit, then this control equipment is:

Are other emission units vented to this control equipment? Yes

If other emission units are vented to this control equipment, List them below:

Five oil tanks, two produced water tanks, one emergency tank, and one vapor recovery tower

List all release point IDs associated with this control equipment below:

Flare FL1

Manufacturer: Steffes
Model Name and Number: 5462146
Date Installed: 9/20/2014
Company Control Equipment ID:
Company Control Equipment Description: BOG =BE4766 15 ft. flare with 3 in/4 in diameter with pilot flame

Ignition Device: Yes

Flame Presence Sensor: Yes
Flame Presence Type: Thermocouple
Inlet Gas Temp (F): 143
Inlet Gas Flow Rate (acfm): 3271.02
Outlet Gas Temp (F): 1400
Outlet Gas Flow Rate (acfm):

Pollutants Controlled

Pollutants Controlled				
Pollutant	In Control? (yes/no)	Design Control Efficiency (%):	Capture Efficiency (%):	Operating Control Efficiency (%):
VOC - Volatile Organic Compounds	Yes	98.00%	100.00%	98.00%
HAPS - Total Combined Hazardous Air Pollutants	Yes	98.00%	100.00%	98.00%

Company: EOG Resources, Inc. Facility: Mary's Draw 412-1527H, Mary's Draw 411-15H
BU Type: Tank BUID: T6 (W0588)

Horizontal or Vertical Release Point Information:

Vertical Or Horizontal Release Point 1	
Company Release Point ID:	Flare FL 1
Company Release Point Description:	Flare Stack
Release Point Type:	Vertical
For longitude and latitude, use NAD 83/WGS84 datum	
Release Point Latitude (5 digits to right of decimal pt.):	43.43606
Release Point Longitude (5 digits to right of decimal pt.):	-105.48730
Base Elevation (ft):	4780
Stack Height (ft):	15
Stack Diameter (ft):	0.25 and 0.33
Exit Gas Velocity (ft/s):	65
Exit Gas Temp (F):	1400
Exit Gas Flow Rate (acfm):	

Company: EOG Resources, Inc. Facility: Mary's Draw 412-1527H, Mary's Draw 411-15H
BU Type: Tank BUID: T7 (W0589)

Emission Unit Type:	Tank	Date of Application:	12/22/2014
AQD Emission Unit ID:		EU ID used by Company:	T7 (W0589)
Emission Unit Description Used by Company:	Produced Water Tank W0589 =AB0082-400 bbl		

Emission Unit Installation or Modification Schedule-*Select reason(s) for this emissions unit being included in this application (must be completed regardless of date of installation or modification) and the date associated with the EU Installation of Modification Schedule:*

Reason: Construction (greenfield/new facility)

*If Reason = **Construction (greenfield/new facility)**, enter date contruction began:*	Date:	9/20/2014
*If Reason = **Synthetic Minor**, enter date emissions unit became new synthetic minor:*	Date:	
*If Reason = **Modification**, enter modification date or date modification began:*	Date:	
*If Reason = **Temporary Permit**, enter beginning date for temporary permit:*	Date:	
*If Reason = **Reconstruction**, enter beginning date for reconstruction:*	Date:	

If the Reason is: **Reconstruction** *or* ***Temporary Permit*** *or* **Other** *please explain below:*

*Oil and Gas Production Site **ONLY***

if Reason = **Construction (greenfield/new facility)** will production commence after permit is issued?		NO
if previous question's answer is No" (production not waiting until after permit), then provide first date of production:	Date:	9/24/2014

List in the area below any previous NSR permit numbers for air contaminant sources included in this application, if applicable, and describe the requested modification. Attach an additional sheet if necessary:

N/A

SCC Codes

Enter SCC for each process. Enter at least one SCC Code. Click to see SCC Code List

Enter SCC Code		*SCC Short Name*	Scc Level 4 Name
SCC Code 1 (Required Field):	2310000550	Oil & Gas Expl & Prod /All Processes /Produced Water	Produced Water
SCC Code 2 (as needed):			
SCC Code 3 (as needed):			

General Emission Unit Dates

Initial Construction Commencement Date:	9/20/2014
Initial Operation Commencement Date:	9/24/2014
Most Recent Construction/ Modification Commencement Date:	
Most Recent Operation Commencement Date:	

Potential Operating Schedule:

Provide the operating schedule for this emission unit.

Hours/day:	24
Hours/year:	8760

Company: EOG Resources, Inc. Facility: Mary's Draw 412-1527H, Mary's Draw 411-15H
EU Type: Tank EUID: T7 (W0589)

Criteria Pollutants

The following tables request information that is needed to determine the applicable requirements and the compliance status of this emission unit with those requirements.

Criteria Pollutants						
		Efficiency Stds.				
Pollutant	Pre-Controlled Potential Emissions (tons/yr)	Potential to Emit (PTE)*	Units*	Potential to Emit (lbs/hr)*	Potential to Emit (tons/yr)*	Basis for Determination *
Particulate emissions (PE/PM) (formerly particulate matter)						
PM =10 microns in diameter (PE/PM10)						
PM =2.5 microns in diameter (PE/PM2.5)						
Sulfur dioxide (SO2)						
Nitrogen Oxides (Nox)						
Carbon monoxide (CO)						
Volatile organic compounds (VOC)	0.22			0.00	0.00	ProMax
Lead (Pb)						
Tota Hazardous Air Pollutants (HAPs)	0.01			0.00	0.00	ProMax
Fluoride (F)						
Hydrogen Sulfide (H2S)						
Mercury (Hg)						
Total Reduced Sulfur (TRS)						
Sulfuric Acid Mist (SAM)						

*Provide your calculations as an attachment and explain how all process variables and emissions factors were selected.

Hazardous Air Pollutants (HAPs) and Toxic Air Contaminants

Hazardous Air Pollutants (HAPs) and Toxic Air Contaminants						
		Efficiency Stds.				
Pollutant	Pre-Controlled Potential Emissions (tons/yr)	Potential to Emit (PTE)*	Units*	Potential to Emit (lbs/hr)*	Potential to Emit (tons/yr)*	Basis for Determination *
Benzene	1.32E-06			6.02E-09	2.64E-08	ProMax
Toluene	0.01			2.5E-05	1.09E-04	ProMax
Ethylbenzene	0.00			1.63E-06	7.14E-06	ProMax
Xylenes	0.00			3.92E-06	1.72E-05	ProMax
n-Hexane	0.00			1.67E-05	7.31E-05	ProMax
2,2,4-Trimethylpentane	0.00			2.19E-07	9.6E-07	ProMax

*Provide your calculations as an attachment and explain how all process variables and emissions factors were selected.

Company: EOG Resources, Inc. Facility: Mary's Draw 412-1527H, Mary's Draw 411-15H
EU Type: Tank EUID: T7 (W0589)

Greenhouse Gases (GHGs)

Greenhouse Gases (GHGs)						
		Efficiency Stds.				
Pollutant	Pre-Controlled Potential Emissions (tons/yr)	Potential to Emit (PTE)*	Units*	Potential to Emit (lbs/hr)*	Potential to Emit (tons/yr)*	Basis for Determination *
Carbon Dioxide	0.08			0.00	0.00	ProMax
Methane	0.32			0.00	0.01	ProMax
*Provide your calculations as an attachment and explain how all process variables and emissions factors were selected.						

Process Flow Diagram:

Attach a Process Flow Diagram to this application for this emission unit.

Have you attached a process diagram? Yes

Best Available Control Technology (BACT):

Is this Emissions Unit subject to BACT? No

Was a BACT Analysis completed for this emission unit? No

Have you attached a BACT analysis? No

Pollutant(s):

Proposed BACT: Presumptive BACT

Lowest Achievable Emission Rate (LAER):

Is Emissions Unit subject to LAER? No

Was LAER Analysis completed for emission unit? No

Pollutant(s):

Proposed LAER:

Federal and State Rule Applicability:

New Source Performance Standard are listed under 40 CFR 60- Standards of Performance for New Stationary Sources.

New Source Performance Standards (NSPS): Not Affected

If applicable, list NSPS Subpart(s):

National Emissions Standards for Hazardous Air Pollutants (NESHAP Part 61) are listed under 40 CFR 61. (These include asbestos, benzene, beryllium, mercury, and vinyl chloride).

National Emission Standards for Hazardous Air Pollutants (NESHAP Part 61): Not Affected

If applicable, list Part 61 NESHAP Subpart(s):

National Emission Standards for Hazardous Air Pollutants (NESHAP Part 63) standards are listed under 40 CFR 63

National Emission Standards for Hazardous Air Pollutants (NESHAP Part 63): Not Affected

If applicable, list Part 63 NESHAP Subpart(s):

These rules are found under WAQSR Chapter 6, Section 4.

Prevention of Significant Deterioration (PSD): Not Affected

These rules are found under WAQSR Chapter 6, Section 13.

Non-Attainment New Source Review: Not Affected

Company: EOG Resources, Inc. Facility: Mary's Draw 412-1527H, Mary's Draw 411-15H
EU Type: Tank EUID: T7 (W0589)

Emissions Unit Specific Information

Material Type: Liquid
Description of Material Stored: Produced Water
Capacity: 400 Units: barrels
Maximum Throughput: 253.7 Units: barrels/day
Maximum Hourly Throughput: 10.6 Units: barrels/hr

Is Tank Heated?: No

Information Specific to Storage Tanks or Silos that Contain Liquids

Enter information below, if Material Type = Liquid

Operating Pressure (psig): atmospheric
Vapor Pressure of Material Stored (psig):

Control Equipment:

Does this emission unit employ emissions control equipment? Yes

Yes- fill out the applicable information below.

No- Go to Release Point Section.

Flare

Is this the only Control Equipment for this emissions unit? Yes

If > 1 control for this emissions unit, then this control equipment is:

Are other emission units vented to this control equipment? Yes

If other emission units are vented to this control equipment, List them below:

Five oil tanks, two produced water tanks, one emergency tank, and one vapor recovery tower

List all release point IDs associated with this control equipment below:

Flare FL1

Manufacturer: Steffes
Model Name and Number: 5462146
Date Installed: 9/20/2014
Company Control Equipment ID:
Company Control Equipment Description: EOG =BE4766 15 ft. flare with 3 in/4 in diameter with pilot flame

Ignition Device: Yes

Flame Presence Sensor: Yes
Flame Presence Type: Thermocouple
Inlet Gas Temp (F): 143
Inlet Gas Flow Rate (acfm): 3271.02
Outlet Gas Temp (F): 1400
Outlet Gas Flow Rate (acfm):

Pollutants Controlled

Pollutants Controlled				
Pollutant	In Control? (yes/no)	Design Control Efficiency (%):	Capture Efficiency (%):	Operating Control Efficiency (%):
VOC - Volatile Organic Compounds	Yes	98.00%	100.00%	98.00%
HAPS - Total Combined Hazardous Air Pollutants	Yes	98.00%	100.00%	98.00%

Company: EOG Resources, Inc. Facility: Mary's Draw 412-1527H, Mary's Draw 411-15H
EU Type: Tank EUID: T7 (W0589)

Horizontal or Vertical Release Point Information:

Vertical Or Horizontal Release Point 1	
Company Release Point ID:	Flare FL 1
Company Release Point Description:	Flare Stack
Release Point Type:	Vertical
For longitude and latitude, use NAD 83/WGS84 datum	
Release Point Latitude (5 digits to right of decimal pt.):	43.43606
Release Point Longitude (5 digits to right of decimal pt.):	-105.48730
Base Elevation (ft):	4780
Stack Height (ft):	15
Stack Diameter (ft):	0.25 and 0.33
Exit Gas Velocity (ft/s):	65
Exit Gas Temp (F):	1400
Exit Gas Flow Rate (acfm):	

Company: EOG Resources, Inc. Facility: Mary's Draw 412-1527H, Mary's Draw 411-15H
EU Type: Flare EUID: FL1

Emission Unit Type:	Flare	Date of Application:	12/22/2014
AQD Emission Unit ID:		EU ID used by Company:	FL1
Emission Unit Description Used by Company:		Flare EOG# BE 4766	

Emission Unit Installation or Modification Schedule- *Select reason(s) for this emissions unit being included in this application (must be completed regardless of date of installation or modification) and the date associated with the EU Installation of Modification Schedule:*

Reason: Construction (greenfield/new facility)

*If Reason = **Construction (greenfield/new facility)**, enter date contruction began:*	Date: 9/20/2014
*If Reason = **Synthetic Minor**, enter date emissions unit became new synthetic minor:*	Date:
*If Reason = **Modification**, enter modification date or date modification began:*	Date:
*If Reason = **Temporary Permit**, enter beginning date for temporary permit:*	Date:
*If Reason = **Reconstruction**, enter beginning date for reconstruction:*	Date:

If the Reason is: **Reconstruction** *or* ***Temporary Permit*** *or* **Other** *please explain below:*

Oil and Gas Production Site ONLY

if Reason = **Construction (greenfield/new facility)** will production commence after permit is issued?	NO
if previous question's answer is No" (production not waiting until after permit), then provide first date of production:	Date: 9/24/2014

List in the area below any previous NSR permit numbers for air contaminant sources included in this application, if applicable, and describe the requested modification. Attach an additional sheet if necessary:

N/A

SCC Codes

Enter SCC for each process. Enter at least one SCC Code. Click to see SCC Code List

Enter SCC Code		*SCC Short Name*	See Level 4 Name
SCC Code 1 (Required Field):	31000160	Crude Oil Production /Flares	Flares
SCC Code 2 (as needed):			
SCC Code 3 (as needed):			

General Emission Unit Dates

Initial Construction Commencement Date:	9/20/2014
Initial Operation Commencement Date:	9/24/2014
Most Recent Construction/ Modification Commencement Date:	
Most Recent Operation Commencement Date:	

Potential Operating Schedule:

Provide the operating schedule for this emission unit.

Hours/day:	24
Hours/year:	8760

Company: EOG Resources, Inc. Facility: Mary's Draw 412-1527H, Mary's Draw 411-15H
EU Type: Flare EUID: FL1

Criteria Pollutants

The following tables request information that is needed to determine the applicable requirements and the compliance status of this emission unit with those requirements.

Criteria Pollutants						
		Efficiency Stds.				
Pollutant	**Pre-Controlled Potential Emissions (tons/yr)**	**Potential to Emit (PTE)***	**Units***	**Potential to Emit (lbs/hr)***	**Potential to Emit (tons/yr)***	**Basis for Determination***
Particulate emissions (PE/PM) (formerly particulate matter)						
PM =10 microns in diameter (PE/PM10)						
PM =2.5 microns in diameter (PE/PM2.5)						
Sulfur dioxide (SO2)						
Nitrogen Oxides (Nox)	7.46			1.70	7.46	AP-42
Carbon monoxide (CO)	1.87			0.43	1.87	AP-42
Volatile organic compounds (VOC)	Note 1 (see below)			Note 1 (see below)	Note 1 (see below)	
Lead (Pb)						
Tota Hazardous Air Pollutants (HAPs)	Note 1 (see below)			Note 1 (see below)	Note 1 (see below)	
Fluoride (F)						
Hydrogen Sulfide (H2S)						
Mercury (Hg)						
Total Reduced Sulfur (TRS)						
Sulfuric Acid Mist (SAM)						

*Provide your calculations as an attachment and explain how all process variables and emissions factors were selected.

Note 1: The VOC and HAP emissions from the flare are accounted for in the crude oil and produced water tanks, VRT, and Truck Loading Operations

Hazardous Air Pollutants (HAPs) and Toxic Air Contaminants

Hazardous Air Pollutants (HAPs) and Toxic Air Contaminants						
		Efficiency Stds.				
Pollutant	**Pre-Controlled Potential Emissions (tons/yr)**	**Potential to Emit (PTE)***	**Units***	**Potential to Emit (lbs/hr)***	**Potential to Emit (tons/yr)***	**Basis for Determination***
Benzene				0.00	0.00	Mass Balance
Toluene				0.00	0.01	Mass Balance
Ethylbenzene				0.01	0.03	Mass Balance
Xylenes				0.00	0.00	Mass Balance
n-Hexane				0.02	0.10	Mass Balance
2,2,4-Trimethylpentane				0.01	0.03	Mass Balance

*Provide your calculations as an attachment and explain how all process variables and emissions factors were selected.

Company: EOG Resources, Inc. Facility: Mary's Draw 412-1527H, Mary's Draw 411-15H
EU Type: Flare EUID: FL1

Greenhouse Gases (GHGs)

Greenhouse Gases (GHGs)						
		Efficiency Stds.				
Pollutant	Pre-Controlled Potential Emissions (tons/yr)	Potential to Emit (PTE)*	Units*	Potential to Emit (lbs/hr)*	Potential to Emit (tons/yr)*	Basis for Determination*
Carbon Dioxide	9578.44			2186.86	9578.44	40 CFR 98.233(v) Eqn W-36
Methane	0.00			0.00	0.00	40 CFR 98.233(v) Eqn W-36

*Provide your calculations as an attachment and explain how all process variables and emissions factors were selected.

Process Flow Diagram:

Attach a Process Flow Diagram to this application for this emission unit.

Have you attached a process diagram? Yes

Best Available Control Technology (BACT):

Is this Emissions Unit subject to BACT? No

Was a BACT Analysis completed for this emission unit? No

Have you attached a BACT analysis? No

Pollutant(s):

Proposed BACT:

Lowest Achievable Emission Rate (LAER):

Is Emissions Unit subject to LAER? No

Was LAER Analysis completed for emission unit? No

Pollutant(s):

Proposed LAER:

Federal and State Rule Applicability:

New Source Performance Standard are listed under 40 CFR 60- Standards of Performance for New Stationary Sources.

New Source Performance Standards (NSPS): Not Affected

If applicable, list NSPS Subpart(s):

National Emissions Standards for Hazardous Air Pollutants (NESHAP Part 61) are listed under 40 CFR 61. (These include asbestos, benzene, beryllium, mercury, and vinyl chloride).

National Emission Standards for Hazardous Air Pollutants (NESHAP Part 61): Not Affected

If applicable, list Part 61 NESHAP Subpart(s):

National Emission Standards for Hazardous Air Pollutants (NESHAP Part 63) standards are listed under 40 CFR 63

National Emission Standards for Hazardous Air Pollutants (NESHAP Part 63): Not Affected

If applicable, list Part 63 NESHAP Subpart(s):

These rules are found under WAQSR Chapter 6, Section 4.

Prevention of Significant Deterioration (PSD): Not Affected

These rules are found under WAQSR Chapter 6, Section 13.

Non-Attainment New Source Review: Not Affected

Company: EOG Resources, Inc. Facility: Mary's Draw 412-1527H, Mary's Draw 411-15H
EU Type: Flare BUID: FL1

Emissions Unit Specific Information

Maximum Design Capacity (MMscf/hr):
Minimum Design Capacity (MMscf/hr):
Pilot Gas Volume (scf/min): 0.14

Emergency Flare Only: No

Ignition Device Type: Pilot

Smokeless Design: Yes
Btu Content (Btu/scf): 2632.56

Assist Gas Utilized? No

Waste Gas Volume: 986 Units: scf/hr
Installation Date: 9/20/2014

Continuously Monitored? No

Control Equipment:

Does this emission unit employ emissions control equipment? No

Yes- fill out the applicable information below.

No- Go to Release Point Section.

Horizontal or Vertical Release Point Information:

Vertical Or Horizontal Release Point 1	
Company Release Point ID:	Flare FL 1
Company Release Point Description	Flare Stack
Release Point Type:	Vertical
For longitude and latitude, use NAD 83/WGS84 datum	
Release Point Latitude (5 digits to right of decimal pt.):	43.43606
Release Point Longitude (5 digits to right of decimal pt.):	-105.48730
Base Elevation (ft):	4780
Stack Height (ft):	15
Stack Diameter (ft):	0.25 and 0.33
Exit Gas Velocity (ft/s):	65
Exit Gas Temp (F):	1400
Exit Gas Flow Rate (acfm):	

Company: EOG Resources, Inc. Facility: Mary's Draw 412-1527H, Mary's Draw 411-15H
EU Type: Heater EUID: LH1

Emission Unit Type:	Heater	Date of Application:	12/22/2014
AQD Emission Unit ID:		EU ID used by Company:	LH1
Emission Unit Description Used by Company:	Trace Line Heater BE 4774		

Emission Unit Installation or Modification Schedule- *Select reason(s) for this emissions unit being included in this application (must be completed regardless of date of installation or modification) and the date associated with the EU Installation of Modification Schedule:*

Reason: Construction (greenfield/new facility)

If Reason = ***Construction (greenfield/new facility)****, enter date contruction began:*	Date: 9/20/2014
If Reason = ***Synthetic Minor****, enter date emissions unit became new synthetic minor:*	Date:
If Reason = ***Modification****, enter modification date or date modification began:*	Date:
If Reason = ***Temporary Permit****, enter beginning date for temporary permit:*	Date:
If Reason = ***Reconstruction****, enter beginning date for reconstruction:*	Date:

If the Reason is: **Reconstruction** *or* ***Temporary Permit*** *or* **Other** *please explain below:*

Oil and Gas Production Site ***ONLY***

if Reason = **Construction (greenfield/new facility)** will production commence after permit is issued?	NO
if previous question's answer is No" (production not waiting until after permit), then provide first date of production:	Date: 9/24/2014

List in the area below any previous NSR permit numbers for air contaminant sources included in this application, if applicable, and describe the requested modification. Attach an additional sheet if necessary:

N/A

SCC Codes

Enter SCC for each process. Enter at least one SCC Code. Click to see SCC Code List

Enter SCC Code		*SCC Short Name*	**See Level 4 Name**
SCC Code 1 (Required Field):	2310010100	Oil & Gas Expl & Prod /Crude Petroleum /Oil Well Heaters	Oil Well Heaters
SCC Code 2 (as needed):			
SCC Code 3 (as needed):			

General Emission Unit Dates

Initial Construction Commencement Date:	9/20/2014
Initial Operation Commencement Date:	9/24/2014
Most Recent Construction/ Modification Commencement Date:	
Most Recent Operation Commencement Date:	

Potential Operating Schedule:

Provide the operating schedule for this emission unit.

Hours/day:	24
Hours/year:	8760

Company: EOG Resources, Inc. Facility: Mary's Draw 412-1527H, Mary's Draw 411-15H
EU Type: Heater EUID: LH1

Criteria Pollutants

The following tables request information that is needed to determine the applicable requirements and the compliance status of this emission unit with those requirements.

Criteria Pollutants						
		Efficiency Stds.				
Pollutant	**Pre-Controlled Potential Emissions (tons/yr)**	**Potential to Emit (PTE)***	**Units***	**Potential to Emit (lbs/hr)***	**Potential to Emit (tons/yr)***	**Basis for Determinatio n***
Particulate emissions (PE/PM) (formerly particulate matter)						
PM =10 microns in diameter (PE/PM10)						
PM =2.5 microns in diameter (PE/PM2.5)						
Sulfur dioxide (SO2)						
Nitrogen Oxides (Nox)	0.16			0.04	0.16	AP-42
Carbon monoxide (CO)	0.14			0.03	0.14	AP-42
Volatile organic compounds (VOC)	0.01			0.00	0.01	AP-42
Lead (Pb)						
Tota Hazardous Air Pollutants (HAPs)	0.00			0.00	0.00	AP-42
Fluoride (F)						
Hydrogen Sulfide (H2S)						
Mercury (Hg)						
Total Reduced Sulfur (TRS)						
Sulfuric Acid Mist (SAM)						

*Provide your calculations as an attachment and explain how all process variables and emissions factors were selected.

Company: EOG Resources, Inc. Facility: Mary's Draw 412-1527H, Mary's Draw 411-15H
EU Type: Heater EUID: LH1

Hazardous Air Pollutants (HAPs) and Toxic Air Contaminants

Hazardous Air Pollutants (HAPs) and Toxic Air Contaminants						
		Efficiency Stds.				
Pollutant	Pre-Controlled Potential Emissions (tons/yr)	Potential to Emit (PTE)*	Units*	Potential to Emit (lbs/hr)*	Potential to Emit (tons/yr)*	Basis for Determination*
Benzene	3.38E-06				3.38E-06	AP-42
Toluene	5.48E-06				5.48E-06	AP-42
Ethylbenzene	0.00				0.00	AP-42
Xylenes	0.00				0.00	AP-42
n-Hexane	2.90E-03				2.90E-03	AP-42
2,2,4-Trimethylpentane	0.00				0.00	AP-42

*Provide your calculations as an attachment and explain how all process variables and emissions factors were selected.

Greenhouse Gases (GHGs)

Greenhouse Gases (GHGs)						
		Efficiency Stds.				
Pollutant	Pre-Controlled Potential Emissions (tons/yr)	Potential to Emit (PTE)*	Units*	Potential to Emit (lbs/hr)*	Potential to Emit (tons/yr)*	Basis for Determination*
Carbon Dioxide	384.27			87.73	384.27	40 CFR 98.37 Table C-1
Methane	0.00			0.00	0.00	40 CFR 98.37 Table C-1

*Provide your calculations as an attachment and explain how all process variables and emissions factors were selected.

Company: EOG Resources, Inc. Facility: Mary's Draw 412-1527H, Mary's Draw 411-15H
EU Type: Heater EUID: LH1

Process Flow Diagram:

Attach a Process Flow Diagram to this application for this emission unit.

Have you attached a process diagram? Yes

Best Available Control Technology (BACT):

Is this Emissions Unit subject to BACT? No

Was a BACT Analysis completed for this emission unit? No

Have you attached a BACT analysis? No

Pollutant(s):

Proposed BACT:

Lowest Achievable Emission Rate (LAER):

Is Emissions Unit subject to LAER? No

Was LAER Analysis completed for emission unit? No

Pollutant(s):

Proposed LAER:

Federal and State Rule Applicability:

New Source Performance Standard are listed under 40 CFR 60- Standards of Performance for New Stationary Sources.

New Source Performance Standards (NSPS): Not Affected

If applicable, list NSPS Subpart(s):

National Emissions Standards for Hazardous Air Pollutants (NESHAP Part 61) are listed under 40 CFR 61. (These include asbestos, benzene, beryllium, mercury, and vinyl chloride).

National Emission Standards for Hazardous Air Pollutants (NESHAP Part 61): Not Affected

If applicable, list Part 61 NESHAP Subpart(s):

National Emission Standards for Hazardous Air Pollutants (NESHAP Part 63) standards are listed under 40 CFR 63

National Emission Standards for Hazardous Air Pollutants (NESHAP Part 63): Not Affected

If applicable, list Part 63 NESHAP Subpart(s):

These rules are found under WAQSR Chapter 6, Section 4.

Prevention of Significant Deterioration (PSD): Not Affected

These rules are found under WAQSR Chapter 6, Section 13.

Non-Attainment New Source Review: Not Affected

Company: EOG Resources, Inc. Facility: Mary's Draw 412-1527H, Mary's Draw 411-15H
EU Type: Heater EUID: LH1

Emissions Unit Specific Information

Firing Type: Direct
Heat Input Rating: 0.375 Units: MMBtu/hr

Primary Fuel Type: Field Gas
Secondary Fuel Type:

Heat Content of Fuel: 1487.8 Units: BTU/scf

Fuel Sulfur Content: 0 Units: ppm

Control Equipment:

Does this emission unit employ emissions control equipment? No

Yes- fill out the applicable information below.

No- Go to Release Point Section.

Fugitive Release Point Information:

Fugitive Release Point 1

Company Release Point ID: LH1

Company Release Point Description: Trace Line Heater BE 4774

Release Point Type: **Fugitive**

For longitude and latitude, use NAD 83/WGS84 datum

Release Point Latitude (5 digits to right of decimal pt.): 43.43606
Release Point Longitude (5 digits to right of decimal pt.): -105.48730
Release Height (ft): N/A

Company: EOG Resources, Inc. Facility: Mary's Draw 412-1527H, Mary's Draw 411-15H
EU Type: Treater EUID: HT1

Emission Unit Type:	Treater	Date of Application:	12/22/2014
AQD Emission Unit ID:		EU ID used by Company:	HT1
Emission Unit Description Used by Company:		EOG Treater BE 4600	

Emission Unit Installation or Modification Schedule- *Select reason(s) for this emissions unit being included in this application (must be completed regardless of date of installation or modification) and the date associated with the EU Installation of Modification Schedule:*

Reason: Construction (greenfield/new facility)

*If Reason = **Construction (greenfield/new facility)**, enter date contruction began:*	Date: 9/20/2014
*If Reason = **Synthetic Minor**, enter date emissions unit became new synthetic minor:*	Date:
*If Reason = **Modification**, enter modification date or date modification began:*	Date:
*If Reason = **Temporary Permit**, enter beginning date for temporary permit:*	Date:
*If Reason = **Reconstruction**, enter beginning date for reconstruction:*	Date:

If the Reason is: **Reconstruction** *or* ***Temporary Permit*** *or* **Other** *please explain below:*

*Oil and Gas Production Site **ONLY***

if Reason = **Construction (greenfield/new facility)** will production commence after permit is issued?	No
if previous question's answer is No" (production not waiting until after permit), then provide first date of production:	Date: 9/24/2014

List in the area below any previous NSR permit numbers for air contaminant sources included in this application, if applicable, and describe the requested modification. Attach an additional sheet if necessary:

N/A

SCC Codes

Enter SCC for each process. Enter at least one SCC Code. Click to see SCC Code List

Enter SCC Code		*SCC Short Name*	**Sce Level 4 Name**
SCC Code 1 (Required Field):	2310011100	On-Shore Oil Production /Heater Treater	Heater Treater
SCC Code 2 (as needed):			
SCC Code 3 (as needed):			

General Emission Unit Dates

Initial Construction Commencement Date:	9/20/2014
Initial Operation Commencement Date:	9/24/2014
Most Recent Construction/ Modification Commencement Date:	
Most Recent Operation Commencement Date:	

Potential Operating Schedule:

Provide the operating schedule for this emission unit.

Hours/day:	24
Hours/year:	8760

Company: BOG Resources, Inc. Facility: Mary's Draw 412-1527H, Mary's Draw 411-15H
EU Type: Treater EUID: HT1

Criteria Pollutants

The following tables request information that is needed to determine the applicable requirements and the compliance status of this emission unit with those requirements.

Criteria Pollutants						
		Efficiency Stds.				
Pollutant	Pre-Controlled Potential Emissions (tons/yr)	Potential to Emit (PTE)*	Units*	Potential to Emit (lbs/hr)*	Potential to Emit (tons/yr)*	Basis for Determination*
Particulate emissions (PE/PM) (formerly particulate matter)						
PM =10 microns in diameter (PE/PM10)						
PM =2.5 microns in diameter (PE/PM2.5)						
Sulfur dioxide (SO2)						
Nitrogen Oxides (Nox)	0.32			0.07	0.32	AP-42/ ProMax
Carbon monoxide (CO)	0.27			0.06	0.27	AP-42/ ProMax
Volatile organic compounds (VOC)	1142.06			5.22	22.86	AP-42/ ProMax
Lead (Pb)						
Tota Hazardous Air Pollutants (HAPs)	111.07			0.51	2.23	AP-42/ ProMax
Fluoride (F)						
Hydrogen Sulfide (H2S)						
Mercury (Hg)						
Total Reduced Sulfur (TRS)						
Sulfuric Acid Mist (SAM)						

*Provide your calculations as an attachment and explain how all process variables and emissions factors were selected.

Hazardous Air Pollutants (HAPs) and Toxic Air Contaminants

Hazardous Air Pollutants (HAPs) and Toxic Air Contaminants						
		Efficiency Stds.				
Pollutant	Pre-Controlled Potential Emissions (tons/yr)	Potential to Emit (PTE)*	Units*	Potential to Emit (lbs/hr)*	Potential to Emit (tons/yr)*	Basis for Determination*
Benzene	13.04			0.06	0.26	AP-42/ ProMax
Toluene	0.20			0.00	0.02	AP-42/ ProMax
Ethylbenzene	0.67			0.01	0.06	AP-42/ ProMax
Xylenes	2.56			0.05	0.22	AP-42/ ProMax
n-Hexane	18.20			0.36	1.59	AP-42/ ProMax
2,2,4-Trimethylpentane	0.75			0.02	0.07	AP-42/ ProMax

*Provide your calculations as an attachment and explain how all process variables and emissions factors were selected.

Company: BOG Resources, Inc. Facility: Mary's Draw 412-1527H, Mary's Draw 411-15H
EU Type: Treater EUID: HT1

Greenhouse Gases (GHGs)

Greenhouse Gases (GHGs)						
		Efficiency Stds.				
Pollutant	Pre-Controlled Potential Emissions (tons/yr)	Potential to Emit (PTE)*	Units*	Potential to Emit (lbs/hr)*	Potential to Emit (tons/yr)*	Basis for Determination*
Carbon Dioxide	192.14			43.87	192.14	40 CFR 98.37 Table C-1
Methane	0.01			0.00	0.01	40 CFR 98.37 Table C-1
*Provide your calculations as an attachment and explain how all process variables and emissions factors were selected.						

Process Flow Diagram:

Attach a Process Flow Diagram to this application for this emission unit.

Have you attached a process diagram? Yes

Best Available Control Technology (BACT):

Is this Emissions Unit subject to BACT? No

Was a BACT Analysis completed for this emission unit? No

Have you attached a BACT analysis? No

Pollutant(s):

Proposed BACT:

Lowest Achievable Emission Rate (LAER):

Is Emissions Unit subject to LAER? No

Was LAER Analysis completed for emission unit? No

Pollutant(s):

Proposed LAER:

Federal and State Rule Applicability:

New Source Performance Standard are listed under 40 CFR 60- Standards of Performance for New Stationary Sources.

New Source Performance Standards (NSPS): Not Affected

If applicable, list NSPS Subpart(s):

National Emissions Standards for Hazardous Air Pollutants (NESHAP Part 61) are listed under 40 CFR 61. (These include asbestos, benzene, beryllium, mercury, and vinyl chloride).

National Emission Standards for Hazardous Air Pollutants (NESHAP Part 61): Not Affected

If applicable, list Part 61 NESHAP Subpart(s):

National Emission Standards for Hazardous Air Pollutants (NESHAP Part 63) standards are listed under 40 CFR 63

National Emission Standards for Hazardous Air Pollutants (NESHAP Part 63): Not Affected

If applicable, list Part 63 NESHAP Subpart(s):

These rules are found under WAQSR Chapter 6, Section 4.

Prevention of Significant Deterioration (PSD): Not Affected

These rules are found under WAQSR Chapter 6, Section 13.

Non-Attainment New Source Review: Not Affected

Company: EOG Resources, Inc. Facility: Mary's Draw 412-1527H, Mary's Draw 411-15H
EU Type: Treater EUID: HT1

Emissions Unit Specific Information

Type of Vessel: Heater-Treater

Is Vessel Heated? Yes

Operating Temperature (F): 143.00

Operating Pressure (psig): 80

Control Equipment:

Does this emission unit employ emissions control equipment? Yes

Yes- fill out the applicable information below.

No- Go to Release Point Section.

Flare

Is this the only Control Equipment for this emissions unit? Yes

If > 1 control for this emissions unit, then this control equipment is

Are other emission units vented to this control equipment? Yes

If other emission units are vented to this control equipment, List them below:

Five oil tanks, two produced water tanks, one emergency tank, and one vapor recovery tower

List all release point IDs associated with this control equipment below:

Flare FL1

Manufacturer: Steffes

Model Name and Number: 5462146

Date Installed: 9/20/2014

Company Control Equipment ID:

Company Control Equipment Description: EOG =BE4766 15 ft. flare with 3 in/4 in diameter with pilot flame

Ignition Device: Yes

Flame Presence Sensor: Yes

Flame Presence Type: Thermocouple

Inlet Gas Temp (F): 143

Inlet Gas Flow Rate (acfm): 3271.02

Outlet Gas Temp (F): 1400

Outlet Gas Flow Rate (acfm):

Pollutants Controlled

Pollutants Controlled				
Pollutant	In Control? (yes/no)	Design Control Efficiency (%):	Capture Efficiency (%):	Operating Control Efficiency (%):
Compounds	Yes	98.00%	100.00%	98.00%
Hazardous Air Pollutants	Yes	98.00%	100.00%	98.00%

Company: EOG Resources, Inc. Facility: Mary's Draw 412-1527H, Mary's Draw 411-15H
EU Type: Treater EUID: HT1

Fugitive Release Point Information:

Vertical Or Horizontal Release Point 1	
Company Release Point ID:	Flare FL 1
Company Release Point Description:	Flare Stack
Release Point Type:	Vertical
For longitude and latitude, use NAD 83/WGS84 datum	
Release Point Latitude (5 digits to right of decimal pt.):	43.43606
Release Point Longitude (5 digits to right of decimal pt.):	-105.48730
Base Elevation (ft):	4780
Stack Height (ft):	15
Stack Diameter (ft):	0.25 and 0.33
Exit Gas Velocity (ft/s):	65
Exit Gas Temp (F):	1400
Exit Gas Flow Rate (acfm):	

Company: EOG Resources, Inc. Facility: Mary's Draw 412-1527H, Mary's Draw 411-15H
EU Type: Vapor Recovery Tower EUID: VRT1

Emission Unit Type: Vapor Recovery Tower — Date of Application: 12/22/2014
AQD Emission Unit ID: — EU ID used by Company: VRT1
Emission Unit Description Used by Company: Vapor Recovery Tower BE 4666

Emission Unit Installation or Modification Schedule- *Select reason(s) for this emissions unit being included in this application (must be completed regardless of date of installation or modification) and the date associated with the EU Installation of Modification Schedule:*

Reason: Construction (greenfield/new facility)

If Reason = ***Construction (greenfield/new facility)****, enter date contruction began:*	Date: 9/20/2014
If Reason = ***Synthetic Minor****, enter date emissions unit became new synthetic minor:*	Date:
If Reason = ***Modification****, enter modification date or date modification began:*	Date:
If Reason = ***Temporary Permit****, enter beginning date for temporary permit:*	Date:
If Reason = ***Reconstruction****, enter beginning date for reconstruction:*	Date:

If the Reason is: **Reconstruction** *or* ***Temporary Permit*** *or* **Other** *please explain below:*

Oil and Gas Production Site ONLY

if Reason = **Construction (greenfield/new facility)** will production commence after permit is issued? No

if previous question's answer is No" (production not waiting until after permit), then provide first date of production: Date: 9/24/2014

List in the area below any previous NSR permit numbers for air contaminant sources included in this application, if applicable, and describe the requested modification. Attach an additional sheet if necessary:

SCC Codes

Enter SCC for each process. Enter at least one SCC Code. Click to see SCC Code List

Enter SCC Code		*SCC Short Name*	Sec Level 4 Name
SCC Code 1 (Required Field):	31000107	Crude Oil Production /Oil/Gas/Water/Separation	Oil/Gas/Water/Separation
SCC Code 2 (as needed):			
SCC Code 3 (as needed):			

General Emission Unit Dates

Initial Construction Commencement Date: 9/20/2014
Initial Operation Commencement Date: 9/24/2014
Most Recent Construction/ Modification Commencement Date:
Most Recent Operation Commencement Date:

Potential Operating Schedule:

Provide the operating schedule for this emission unit.

Hours/day: 24
Hours/year: 8760

Company: EOG Resources, Inc. Facility: Mary's Draw 412-1527H, Mary's Draw 411-15H
EU Type: Vapor Recovery Tower EUID: VRT1

Criteria Pollutants

The following tables request information that is needed to determine the applicable requirements and the compliance status of this emission unit with those requirements.

Criteria Pollutants						
		Efficiency Stds.				
Pollutant	Pre-Controlled Potential Emissions (tons/yr)	Potential to Emit (PTE)*	Units*	Potential to Emit (lbs/hr)*	Potential to Emit (tons/yr)*	Basis for Determination*
Particulate emissions (PE/PM) (formerly particulate matter)						
PM =10 microns in diameter (PE/PM10)						
PM =2.5 microns in diameter (PE/PM2.5)						
Sulfur dioxide (SO2)						
Nitrogen Oxides (Nox)						
Carbon monoxide (CO)						
Volatile organic compounds (VOC)	450.97			2.06	9.02	ProMax
Lead (Pb)						
Tota Hazardous Air Pollutants (HAPs)	13.69			0.27	0.27	ProMax
Fluoride (F)						
Hydrogen Sulfide (H2S)						
Mercury (Hg)						
Total Reduced Sulfur (TRS)						
Sulfuric Acid Mist (SAM)						

*Provide your calculations as an attachment and explain how all process variables and emissions factors were selected.

Hazardous Air Pollutants (HAPs) and Toxic Air Contaminants

Hazardous Air Pollutants (HAPs) and Toxic Air Contaminants						
		Efficiency Stds.				
Pollutant	Pre-Controlled Potential Emissions (tons/yr)	Potential to Emit (PTE)*	Units*	Potential to Emit (lbs/hr)*	Potential to Emit (tons/yr)*	Basis for Determination*
Benzene	0.02			0.00	0.00	ProMax
Toluene	0.01			0.00	0.00	ProMax
Ethylbenzene	0.38			0.00	0.01	ProMax
Xylenes	1.25			0.01	0.03	ProMax
n-Hexane	4.78			0.02	0.10	ProMax
2,2,4-Trimethylpentane	1.45			0.01	0.03	ProMax

*Provide your calculations as an attachment and explain how all process variables and emissions factors were selected.

Company: BOG Resources, Inc. Facility: Mary's Draw 412-1527H, Mary's Draw 411-15H
EU Type: Vapor Recovery Tower EUID: VRT1

Greenhouse Gases (GHGs)

Greenhouse Gases (GHGs)						
		Efficiency Stds.				
Pollutant	Pre-Controlled Potential Emissions (tons/yr)	Potential to Emit (PTE)*	Units*	Potential to Emit (lbs/hr)*	Potential to Emit (tons/yr)*	Basis for Determination*
Carbon Dioxide	6.65			0.03	0.13	ProMax
Methane	33.01			0.15	0.66	ProMax

*Provide your calculations as an attachment and explain how all process variables and emissions factors were selected.

Process Flow Diagram:

Attach a Process Flow Diagram to this application for this emission unit.

Have you attached a process diagram? Yes

Best Available Control Technology (BACT):

Is this Emissions Unit subject to BACT? No

Was a BACT Analysis completed for this emission unit? No

Have you attached a BACT analysis? No

Pollutant(s):

Proposed BACT: 100% Capture Efficiency and 98% Destruction Efficiency by Flare

Lowest Achievable Emission Rate (LAER):

Is Emissions Unit subject to LAER? No

Was LAER Analysis completed for emission unit? No

Pollutant(s):

Proposed LAER:

Federal and State Rule Applicability:

New Source Performance Standard are listed under 40 CFR 60- Standards of Performance for New Stationary Sources.

New Source Performance Standards (NSPS): Not Affected

If applicable, list NSPS Subpart(s):

National Emissions Standards for Hazardous Air Pollutants (NESHAP Part 61) are listed under 40 CFR 61. (These include asbestos, benzene, beryllium, mercury, and vinyl chloride).

National Emission Standards for Hazardous Air Pollutants (NESHAP Part 61): Not Affected

If applicable, list Part 61 NESHAP Subpart(s):

National Emission Standards for Hazardous Air Pollutants (NESHAP Part 63) standards are listed under 40 CFR 63

National Emission Standards for Hazardous Air Pollutants (NESHAP Part 63): Not Affected

If applicable, list Part 63 NESHAP Subpart(s):

These rules are found under WAQSR Chapter 6, Section 4.

Prevention of Significant Deterioration (PSD): Not Affected

These rules are found under WAQSR Chapter 6, Section 13.

Non-Attainment New Source Review: Not Affected

Company: EOG Resources, Inc. Facility: Mary's Draw 412-1527H, Mary's Draw 411-15H
EU Type: Vapor Recovery Tower EUID: VRT1

Emissions Unit Specific Information

Flow Rate or Throughput: 16.20 Units: scfm
VOC Concentration (%): 84.30
HAPs Concentration (%): 2.56

Control Equipment:

Does this emission unit employ emissions control equipment? Yes

Yes- fill out the applicable information below.

No- Go to Release Point Section.

Flare

Is this the only Control Equipment for this emissions unit? Yes

If > 1 control for this emissions unit, then this control equipment is

Are other emission units vented to this control equipment? Yes

If other emission units are vented to this control equipment, List them below:

Five oil tanks, two produced water tanks, one emergency tank, and one vapor recovery tower

List all release point IDs associated with this control equipment below:

Flare FL1

Manufacturer: Steffes
Model Name and Number: 5462146
Date Installed: 9/20/2014
Company Control Equipment ID:
Company Control Equipment Description: EOG =BE4766 15 ft. flare with 3 in/4 in diameter with pilot flame

Ignition Device: Yes

Flame Presence Sensor: Yes
Flame Presence Type: Thermocouple
Inlet Gas Temp (F): 143
Inlet Gas Flow Rate (acfm): 3271.02
Outlet Gas Temp (F): 1400
Outlet Gas Flow Rate (acfm):

Pollutants Controlled

Pollutants Controlled				
Pollutant	In Control? (yes/no)	Design Control Efficiency (%):	Capture Efficiency (%):	Operating Control Efficiency (%):
Compounds	Yes	98.00%	100.00%	98.00%
Hazardous Air Pollutants	Yes	98.00%	100.00%	98.00%

Company: EOG Resources, Inc. Facility: Mary's Draw 412-1527H, Mary's Draw 411-15H
EU Type: Vapor Recovery Tower EUID: VRT1

Horizontal or Vertical Release Point Information:

Vertical Or Horizontal Release Point 1	
Company Release Point ID:	Flare FL 1
Company Release Point Description:	Flare Stack
Release Point Type:	Vertical
For longitude and latitude, use NAD 83/WGS84 datum	
Release Point Latitude (5 digits to right of decimal pt.):	43.43606
Release Point Longitude (5 digits to right of decimal pt.):	-105.48730
Base Elevation (ft):	4780
Stack Height (ft):	15
Stack Diameter (ft):	0.25 and 0.33
Exit Gas Velocity (ft/s):	65
Exit Gas Temp (F):	1400
Exit Gas Flow Rate (acfm):	

Company: EOG Resources, Inc. Facility: Mary's Draw 412-1527H, Mary's Draw 411-15H
EU Type: Fugitives EUID: FUG

Emission Unit Type:	Fugitives	Date of Application:	12/22/2014
AQD Emission Unit ID:		EU ID used by Company:	FUG
Emission Unit Description Used by Company:	All Fugitives (Valves, Flanges, Connections, Seals, Drains)		

Emission Unit Installation or Modification Schedule- *Select reason(s) for this emissions unit being included in this application (must be completed regardless of date of installation or modification) and the date associated with the EU Installation of Modification Schedule:*

Reason: Construction (greenfield/new facility)

If Reason = ***Construction (greenfield/new facility)****, enter date contruction began:*	Date:	9/20/2014
If Reason = ***Synthetic Minor****, enter date emissions unit became new synthetic minor:*	Date:	
If Reason = ***Modification****, enter modification date or date modification began:*	Date:	
If Reason = ***Temporary Permit****, enter beginning date for temporary permit:*	Date:	
If Reason = ***Reconstruction****, enter beginning date for reconstruction:*	Date:	

If the Reason is: **Reconstruction** *or* ***Temporary Permit*** *or* **Other** *please explain below:*

Oil and Gas Production Site ***ONLY***

if Reason = **Construction (greenfield/new facility)** will production commence after permit is issued?		No
if previous question's answer is No" (production not waiting until after permit), then provide first date of production:	Date:	9/24/2014

List in the area below any previous NSR permit numbers for air contaminant sources included in this application, if applicable, and describe the requested modification. Attach an additional sheet if necessary:

N/A

SCC Codes

Enter SCC for each process. Enter at least one SCC Code. Click to see SCC Code List

Enter SCC Code		*SCC Short Name*	Scc Level 4 Name
SCC Code 1 (Required Field):	31000101	Crude Oil Production /Complete Well: Fugitive Emissions	Complete Well: Fugitive Emissions
SCC Code 2 (as needed):			
SCC Code 3 (as needed):			

General Emission Unit Dates

Initial Construction Commencement Date:	9/20/2014
Initial Operation Commencement Date:	9/24/2014
Most Recent Construction/ Modification Commencement Date:	
Most Recent Operation Commencement Date:	

Potential Operating Schedule:

Provide the operating schedule for this emission unit.

Hours/day:	24
Hours/year:	8760

Company: EOG Resources, Inc. Facility: Mary's Draw 412-1527H, Mary's Draw 411-15H
EU Type: Fugitives EUID: FUG

Criteria Pollutants

The following tables request information that is needed to determine the applicable requirements and the compliance status of this emission unit with those requirements.

Criteria Pollutants						
		Efficiency Stds.				
Pollutant	**Pre-Controlled Potential Emissions (tons/yr)**	**Potential to Emit (PTE)***	**Units***	**Potential to Emit (lbs/hr)***	**Potential to Emit (tons/yr)***	**Basis for Determination***
Particulate emissions (PE/PM) (formerly particulate matter)						
PM =10 microns in diameter (PE/PM10)						
PM =2.5 microns in diameter (PE/PM2.5)						
Sulfur dioxide (SO2)						
Nitrogen Oxides (Nox)						
Carbon monoxide (CO)						
Volatile organic compounds (VOC)	4.90			1.12	4.90	Note 1 (see below)
Lead (Pb)						
Tota Hazardous Air Pollutants (HAPs)	0.24			0.05	0.24	Note 1 (see below)
Fluoride (F)						
Hydrogen Sulfide (H2S)						
Mercury (Hg)						
Total Reduced Sulfur (TRS)						
Sulfuric Acid Mist (SAM)						

*Provide your calculations as an attachment and explain how all process variables and emissions factors were selected.

Note 1: EPA Protocol for Equipment Leak Emission Estimates, November 1995, Table 2-4, Pages 2-15.

Company: EOG Resources, Inc. Facility: Mary's Draw 412-1527H, Mary's Draw 411-15H
EU Type: Fugitives EUID: FUG

Hazardous Air Pollutants (HAPs) and Toxic Air Contaminants

Hazardous Air Pollutants (HAPs) and Toxic Air Contaminants						
		Efficiency Stds.				
Pollutant	Pre-Controlled Potential Emissions (tons/yr)	Potential to Emit (PTE)*	Units*	Potential to Emit (lbs/hr)*	Potential to Emit (tons/yr)*	Basis for Determination*
Benzene	0.00			0.00	0.00	Note 1 (see below)
Toluene	0.02			0.00	0.02	Note 1 (see below)
Ethylbenzene	0.02			0.00	0.02	Note 1 (see below)
Xylenes	0.02			0.01	0.02	Note 1 (see below)
n-Hexane	0.10			0.02	0.10	Note 1 (see below)
2,2,4-Trimethylpentane	0.07			0.02	0.07	Note 1 (see below)
*Provide your calculations as an attachment and explain how all process variables and emissions factors were selected.						

Note 1: EPA Protocol for Equipment Leak Emission Estimates, November 1995, Table 2-4, Pages 2-15.

Greenhouse Gases (GHGs)

Greenhouse Gases (GHGs)						
		Efficiency Stds.				
Pollutant	Pre-Controlled Potential Emissions (tons/yr)	Potential to Emit (PTE)*	Units*	Potential to Emit (lbs/hr)*	Potential to Emit (tons/yr)*	Basis for Determination*
*Provide your calculations as an attachment and explain how all process variables and emissions factors were selected.						

Company: EOG Resources, Inc. Facility: Mary's Draw 412-1527H, Mary's Draw 411-15H
EU Type: Fugitives EUID: FUG

Process Flow Diagram:

Attach a Process Flow Diagram to this application for this emission unit.

Have you attached a process diagram? Yes

Best Available Control Technology (BACT):

Is this Emissions Unit subject to BACT? No

Was a BACT Analysis completed for this emission unit? No

Have you attached a BACT analysis? No

Pollutant(s):

Proposed BACT:

Lowest Achievable Emission Rate (LAER):

Is Emissions Unit subject to LAER? No

Was LAER Analysis completed for emission unit? No

Pollutant(s):

Proposed LAER:

Federal and State Rule Applicability:

New Source Performance Standard are listed under 40 CFR 60- Standards of Performance for New Stationary Sources.

New Source Performance Standards (NSPS): Not Affected

If applicable, list NSPS Subpart(s):

National Emissions Standards for Hazardous Air Pollutants (NESHAP Part 61) are listed under 40 CFR 61. (These include asbestos, benzene, beryllium, mercury, and vinyl chloride).

National Emission Standards for Hazardous Air Pollutants (NESHAP Part 61): Not Affected

If applicable, list Part 61 NESHAP Subpart(s):

National Emission Standards for Hazardous Air Pollutants (NESHAP Part 63) standards are listed under 40 CFR 63

National Emission Standards for Hazardous Air Pollutants (NESHAP Part 63): Not Affected

If applicable, list Part 63 NESHAP Subpart(s):

These rules are found under WAQSR Chapter 6, Section 4.

Prevention of Significant Deterioration (PSD): Not Affected

These rules are found under WAQSR Chapter 6, Section 13.

Non-Attainment New Source Review: Not Affected

Company: EOG Resources, Inc. Facility: Mary's Draw 412-1527H, Mary's Draw 411-15H
EU Type: Fugitives EUID: FUG

Emissions Unit Specific Information

Type of Fugitive Emission: Fugitive Leaks at O&G

Control Equipment:

Does this emission unit employ emissions control equipment? No

Yes- fill out the applicable information below.

No- Go to Release Point Section.

Fugitive Release Point Information:

Fugitive Release Point 1

Company Release Point ID: FUG

Company Release Point Description: All Fugitives (Valves, Flanges, Connections, Seals, Drains)

Release Point Type: **Fugitive**

For longitude and latitude, use NAD 83/WGS84 datum

Release Point Latitude (5 digits to right of decimal pt.): 43.43606

Release Point Longitude (5 digits to right of decimal pt.): -105.48730

Release Height (ft): N/A

Company: EOG Resources, Inc. Facility: Mary's Draw 412-1527H, Mary's Draw 411-15H
EU Type: Loading/Unloading EUID: TLO1

Emission Unit Type: Loading/Unloading — Date of Application: 12/22/2014
AQD Emission Unit ID: — EU ID used by Company: TLO1
Emission Unit Description Used by Company: Oil Loading from Storage Tanks

Emission Unit Installation or Modification Schedule- *Select reason(s) for this emissions unit being included in this application (must be completed regardless of date of installation or modification) and the date associated with the EU Installation of Modification Schedule:*

Reason: Construction (greenfield/new facility)

If Reason = ***Construction (greenfield/new facility)****, enter date construction began:* Date: 9/20/2014
If Reason = ***Synthetic Minor****, enter date emissions unit became new synthetic minor:* Date:
If Reason = ***Modification****, enter modification date or date modification began:* Date:
If Reason = ***Temporary Permit****, enter beginning date for temporary permit:* Date:
If Reason = ***Reconstruction****, enter beginning date for reconstruction:* Date:

If the Reason is: **Reconstruction** *or* ***Temporary Permit*** *or* **Other** *please explain below:*

Oil and Gas Production Site ***ONLY***

if Reason = **Construction (greenfield/new facility)** will production commence after permit is issued? No

if previous question's answer is No" (production not waiting until after permit), then provide first date of production: Date: 9/24/2014

List in the area below any previous NSR permit numbers for air contaminant sources included in this application, if applicable, and describe the requested modification. Attach an additional sheet if necessary:

N/A

SCC Codes

Enter SCC for each process. Enter at least one SCC Code. Click to see SCC Code List

Enter SCC Code		*SCC Short Name*	**See Level 4 Name**
SCC Code 1 (Required Field):	2310010800	Oil & Gas Expl & Prod /Crude Petroleum /Oil Well Truck Loading	Oil Well Truck Loading
SCC Code 2 (as needed):			
SCC Code 3 (as needed):			

General Emission Unit Dates

Initial Construction Commencement Date: 9/20/2014
Initial Operation Commencement Date: 9/24/2014
Most Recent Construction/ Modification Commencement Date:
Most Recent Operation Commencement Date:

Potential Operating Schedule:

Provide the operating schedule for this emission unit.

Hours/day: 24
Hours/year: 8760

Company: EOG Resources, Inc. Facility: Mary's Draw 412-1527H, Mary's Draw 411-15H
BU Type: Loading/Unloading EUID: TLO1

Criteria Pollutants

The following tables request information that is needed to determine the applicable requirements and the compliance status of this emission unit with those requirements.

Criteria Pollutants						
		Efficiency Stds.				
Pollutant	Pre-Controlled Potential Emissions (tons/yr)	Potential to Emit (PTE)*	Units*	Potential to Emit (lbs/hr)*	Potential to Emit (tons/yr)*	Basis for Determination*
Particulate emissions (PE/PM) (formerly particulate matter)						
PM =10 microns in diameter (PE/PM10)						
PM =2.5 microns in diameter (PE/PM2.5)						
Sulfur dioxide (SO2)						
Nitrogen Oxides (Nox)						
Carbon monoxide (CO)						
Volatile organic compounds (VOC)	15.08			16.78	4.53	AP-42
Lead (Pb)						
Tota Hazardous Air Pollutants (HAPs)	4.55E-02			0.04	0.01	AP-42
Fluoride (F)						
Hydrogen Sulfide (H2S)						
Mercury (Hg)						
Total Reduced Sulfur (TRS)						
Sulfuric Acid Mist (SAM)						

*Provide your calculations as an attachment and explain how all process variables and emissions factors were selected.

Hazardous Air Pollutants (HAPs) and Toxic Air Contaminants

Hazardous Air Pollutants (HAPs) and Toxic Air Contaminants						
		Efficiency Stds.				
Pollutant	Pre-Controlled Potential Emissions (tons/yr)	Potential to Emit (PTE)*	Units*	Potential to Emit (lbs/hr)*	Potential to Emit ((tons/yr)*	Basis for Determination*
Benzene	9.05E-04			7.89E-04	2.72E-04	AP-42
Toluene	5.13E-04			4.47E-04	1.54E-04	AP-42
Ethylbenzene	1.36E-04			1.18E-04	4.07E-05	AP-42
Xylenes	0.00			1.32E-04	4.53E-05	AP-42
n-Hexane	0.23			3.06E-02	1.05E-02	AP-42
2,2,4-Trimethylpentane	0.06			7.57E-03	2.60E-03	AP-42

*Provide your calculations as an attachment and explain how all process variables and emissions factors were selected.

Greenhouse Gases (GHGs)

Greenhouse Gases (GHGs)						
		Efficiency Stds.				
Pollutant	Pre-Controlled Potential Emissions (tons/yr)	Potential to Emit (PTE)*	Units*	Potential to Emit (lbs/hr)*	Potential to Emit (tons/yr)*	Basis for Determination*

*Provide your calculations as an attachment and explain how all process variables and emissions factors were selected.

Process Flow Diagram:

Attach a Process Flow Diagram to this application for this emission unit.

Have you attached a process diagram? Yes

Best Available Control Technology (BACT):

Is this Emissions Unit subject to BACT? No

Was a BACT Analysis completed for this emission unit? No

Have you attached a BACT analysis? No

Pollutant(s):

Proposed BACT:

Lowest Achievable Emission Rate (LAER):

Is Emissions Unit subject to LAER? No

Was LAER Analysis completed for emission unit? No

Pollutant(s):

Proposed LAER:

Federal and State Rule Applicability:

New Source Performance Standard are listed under 40 CFR 60- Standards of Performance for New Stationary Sources.

New Source Performance Standards (NSPS): Not Affected

If applicable, list NSPS Subpart(s):

National Emissions Standards for Hazardous Air Pollutants (NESHAP Part 61) are listed under 40 CFR 61. (These include asbestos, benzene, beryllium, mercury, and vinyl chloride).

National Emission Standards for Hazardous Air Pollutants (NESHAP Part 61): Not Affected

If applicable, list Part 61 NESHAP Subpart(s):

National Emission Standards for Hazardous Air Pollutants (NESHAP Part 63) standards are listed under 40 CFR 63

National Emission Standards for Hazardous Air Pollutants (NESHAP Part 63): Not Affected

If applicable, list Part 63 NESHAP Subpart(s):

These rules are found under WAQSR Chapter 6, Section 4.

Prevention of Significant Deterioration (PSD): Not Affected

These rules are found under WAQSR Chapter 6, Section 13.

Non-Attainment New Source Review: Not Affected

Company: EOG Resources, Inc. Facility: Mary's Draw 412-1527H, Mary's Draw 411-15H
EU Type: Loading/Unloading EUID: TLO1

Emissions Unit Specific Information

Type of Material: Liquid

Material Description: Crude Oil

Maximum Annual Throughput: 137568.5 Units: barrels/yr

Maximum Hourly Throughput: 200 Units: barrels/hr

Detailed Description of Loading/Unloading/Dump Source: Oil and produced water truck loading is controlled with vapor return lines to the storage tanks with a 70% capture efficiency and routed to the flare.

Control Equipment:

Does this emission unit employ emissions control equipment? No

Yes- fill out the applicable information below.

No- Go to Release Point Section.

Flare

Is this the only Control Equipment for this emissions unit? Yes

If > 1 control for this emissions unit, then this control equipment is

Are other emission units vented to this control equipment? Yes

If other emission units are vented to this control equipment, List them below:

Five oil tanks, two produced water tanks, one emergency tank, and one vapor recovery tower

List all release point IDs associated with this control equipment below:

Flare FL1

Manufacturer: Steffes

Model Name and Number: 5462146

Date Installed: 9/20/2014

Company Control Equipment ID:

Company Control Equipment Description: EOG =BE4766 15 ft. flare with 3 in/4 in diameter with pilot flame

Ignition Device: Yes

Flame Presence Sensor: Yes

Flame Presence Type: Thermocouple

Inlet Gas Temp (F): 143

Inlet Gas Flow Rate (acfm): 3271.02

Outlet Gas Temp (F): 1400

Outlet Gas Flow Rate (acfm):

Pollutants Controlled

Pollutants Controlled				
Pollutant	In Control? (yes/no)	Design Control Efficiency (%):	Capture Efficiency (%):	Operating Control Efficiency (%):
Compounds	Yes	98.00%	100.00%	98.00%
Hazardous Air Pollutants	Yes	98.00%	100.00%	98.00%

Company: EOG Resources, Inc. Facility: Mary's Draw 412-1527H, Mary's Draw 411-15H
EU Type: Loading/Unloading EUID: TLO1

Horizontal or Vertical Release Point Information:

Vertical Or Horizontal Release Point 1	
Company Release Point ID:	Flare FL 1
Company Release Point Description:	Flare Stack
Release Point Type:	Vertical
For longitude and latitude, use NAD 83/WGS84 datum	
Release Point Latitude (5 digits to right of decimal pt.):	43.43606
Release Point Longitude (5 digits to right of decimal pt.):	-105.48730
Base Elevation (ft):	4780
Stack Height (ft):	15
Stack Diameter (ft):	0.25 and 0.33
Exit Gas Velocity (ft/s):	65
Exit Gas Temp (F):	1400
Exit Gas Flow Rate (acfm):	

Company: EOG Resources, Inc. Facility: Mary's Draw 412-1527H, Mary's Draw 411-15H
EU Type: Planned MSS Emissions EUID: BD

Emission Unit Type:	Planned MSS Emissions	Date of Application:	12/22/2014
AQD Emission Unit ID:		EU ID used by Company:	BD
Emission Unit Description Used by Company:	Blowdowns		

Emission Unit Installation or Modification Schedule- *Select reason(s) for this emissions unit being included in this application (must be completed regardless of date of installation or modification) and the date associated with the EU Installation of Modification Schedule:*

Reason:

If Reason = ***Construction (greenfield/new facility)****, enter date contruction began:*	Date:	9/20/2014
If Reason = ***Synthetic Minor****, enter date emissions unit became new synthetic minor:*	Date:	
If Reason = ***Modification****, enter modification date or date modification began:*	Date:	
If Reason = ***Temporary Permit****, enter beginning date for temporary permit:*	Date:	
If Reason = ***Reconstruction****, enter beginning date for reconstruction:*	Date:	

If the Reason is: **Reconstruction** *or* ***Temporary Permit*** *or* **Other** *please explain below:*

Oil and Gas Production Site ***ONLY***

if Reason = **Construction (greenfield/new facility)** will production commence after permit is issued?

if previous question's answer is No" (production not waiting until after permit), then provide first date of production: Date: 9/24/2014

List in the area below any previous NSR permit numbers for air contaminant sources included in this application, if applicable, and describe the requested modification. Attach an additional sheet if necessary:

SCC Codes

Enter SCC for each process. Enter at least one SCC Code. Click to see SCC Code List

Enter SCC Code		*SCC Short Name*	Sce Level 4 Name
SCC Code 1 (Required Field):	2310021603	#REF!	#REF!
SCC Code 2 (as needed):			
SCC Code 3 (as needed):			

General Emission Unit Dates

Initial Construction Commencement Date:	9/20/2014
Initial Operation Commencement Date:	9/24/2014
Most Recent Construction/ Modification Commencement Date:	
Most Recent Operation Commencement Date:	

Potential Operating Schedule:

Provide the operating schedule for this emission unit.

Hours/day:	0.5
Hours/year:	1.5

Company: EOG Resources, Inc. Facility: Mary's Draw 412-1527H, Mary's Draw 411-15H
EU Type: Planned MSS Emissions EUID: BD

Criteria Pollutants

The following tables request information that is needed to determine the applicable requirements and the compliance status of this emission unit with those requirements.

Criteria Pollutants						
		Efficiency Stds.				
Pollutant	**Pre-Controlled Potential Emissions (tons/yr)**	**Potential to Emit (PTE)***	**Units***	**Potential to Emit (lbs/hr)***	**Potential to Emit (tons/yr)***	**Basis for Determination***
Particulate emissions (PE/PM) (formerly particulate matter)						
PM =10 microns in diameter (PE/PM10)						
PM =2.5 microns in diameter (PE/PM2.5)						
Sulfur dioxide (SO2)						
Nitrogen Oxides (Nox)						
Carbon monoxide (CO)						
Volatile organic compounds (VOC)	2.14E-02			28.48829	2.14E-02	
Lead (Pb)						
Tota Hazardous Air Pollutants (HAPs)	1.26E-03			30.17116	2.26E-02	
Fluoride (F)						
Hydrogen Sulfide (H2S)						
Mercury (Hg)						
Total Reduced Sulfur (TRS)						
Sulfuric Acid Mist (SAM)						

*Provide your calculations as an attachment and explain how all process variables and emissions factors were selected.

Company: EOG Resources, Inc. Facility: Mary's Draw 412-1527H, Mary's Draw 411-15H
EU Type: Planned MSS Emissions EUID: BD

Hazardous Air Pollutants (HAPs) and Toxic Air Contaminants

Hazardous Air Pollutants (HAPs) and Toxic Air Contaminants						
		Efficiency Stds.				
Pollutant	Pre-Controlled Potential Emissions (tons/yr)	Potential to Emit (PTE)*	Units*	Potential to Emit (lbs/hr)*	Potential to Emit (tons/yr)*	Basis for Determination*
Benzene	2.7E-05			3.6E-02	2.7E-05	
Toluene	4.0E-05			5.4E-02	4.0E-05	
Ethylbenzene	7.1E-06			9.5E-03	7.1E-06	
Xylenes	2.2E-05			3.0E-02	2.2E-05	
n-Hexane	1.1E-03			1.5E+00	1.1E-03	
2,2,4-Trimethylpentane	6.6E-05			8.8E-02	6.6E-05	

*Provide your calculations as an attachment and explain how all process variables and emissions factors were selected.

Greenhouse Gases (GHGs)

Greenhouse Gases (GHGs)						
		Efficiency Stds.				
Pollutant	Pre-Controlled Potential Emissions (tons/yr)	Potential to Emit (PTE)*	Units*	Potential to Emit (lbs/hr)*	Potential to Emit (tons/yr)*	Basis for Determination*

*Provide your calculations as an attachment and explain how all process variables and emissions factors were selected.

Company: EOG Resources, Inc. Facility: Mary's Draw 412-1527H, Mary's Draw 411-15H
EU Type: Planned MSS Emissions EUID: BD

Process Flow Diagram:

Attach a Process Flow Diagram to this application for this emission unit.

Have you attached a process diagram? Yes

Best Available Control Technology (BACT):

Is this Emissions Unit subject to BACT? No

Was a BACT Analysis completed for this emission unit? No

Have you attached a BACT analysis? No

Pollutant(s):

Proposed BACT:

Lowest Achievable Emission Rate (LAER):

Is Emissions Unit subject to LAER? No

Was LAER Analysis completed for emission unit? No

Pollutant(s):

Proposed LAER:

Federal and State Rule Applicability:

New Source Performance Standard are listed under 40 CFR 60- Standards of Performance for New Stationary Sources.

New Source Performance Standards (NSPS): Not Affected

If applicable, list NSPS Subpart(s):

National Emissions Standards for Hazardous Air Pollutants (NESHAP Part 61) are listed under 40 CFR 61. (These include asbestos, benzene, beryllium, mercury, and vinyl chloride).

National Emission Standards for Hazardous Air Pollutants (NESHAP Part 61): Not Affected

If applicable, list Part 61 NESHAP Subpart(s):

National Emission Standards for Hazardous Air Pollutants (NESHAP Part 63) standards are listed under 40 CFR 63

National Emission Standards for Hazardous Air Pollutants (NESHAP Part 63): Not Affected

If applicable, list Part 63 NESHAP Subpart(s):

These rules are found under WAQSR Chapter 6, Section 4.

Prevention of Significant Deterioration (PSD): Not Affected

These rules are found under WAQSR Chapter 6, Section 13.

Non-Attainment New Source Review: Not Affected

Company: EOG Resources, Inc. Facility: Mary's Draw 412-1527H, Mary's Draw 411-15H
EU Type: Planned MSS Emissions EUID: BD

Emissions Unit Specific Information

Type of Event: Blow-down

Control Equipment:

Does this emission unit employ emissions control equipment? No

Yes- fill out the applicable information below.

No- Go to Release Point Section.

Fugitive Release Point 1

Company Release Point ID: BD

Company Release Point Description: Blowdowns

Release Point Type: **Fugitive**

For longitude and latitude, use NAD 83/WGS84 datum

Release Point Latitude (5 digits to right of decimal pt.): 43.43606

Release Point Longitude (5 digits to right of decimal pt.): -105.48730

Release Height (ft): N/A

Attachment B

Flow Diagram/Plot Plan of Emissions Units

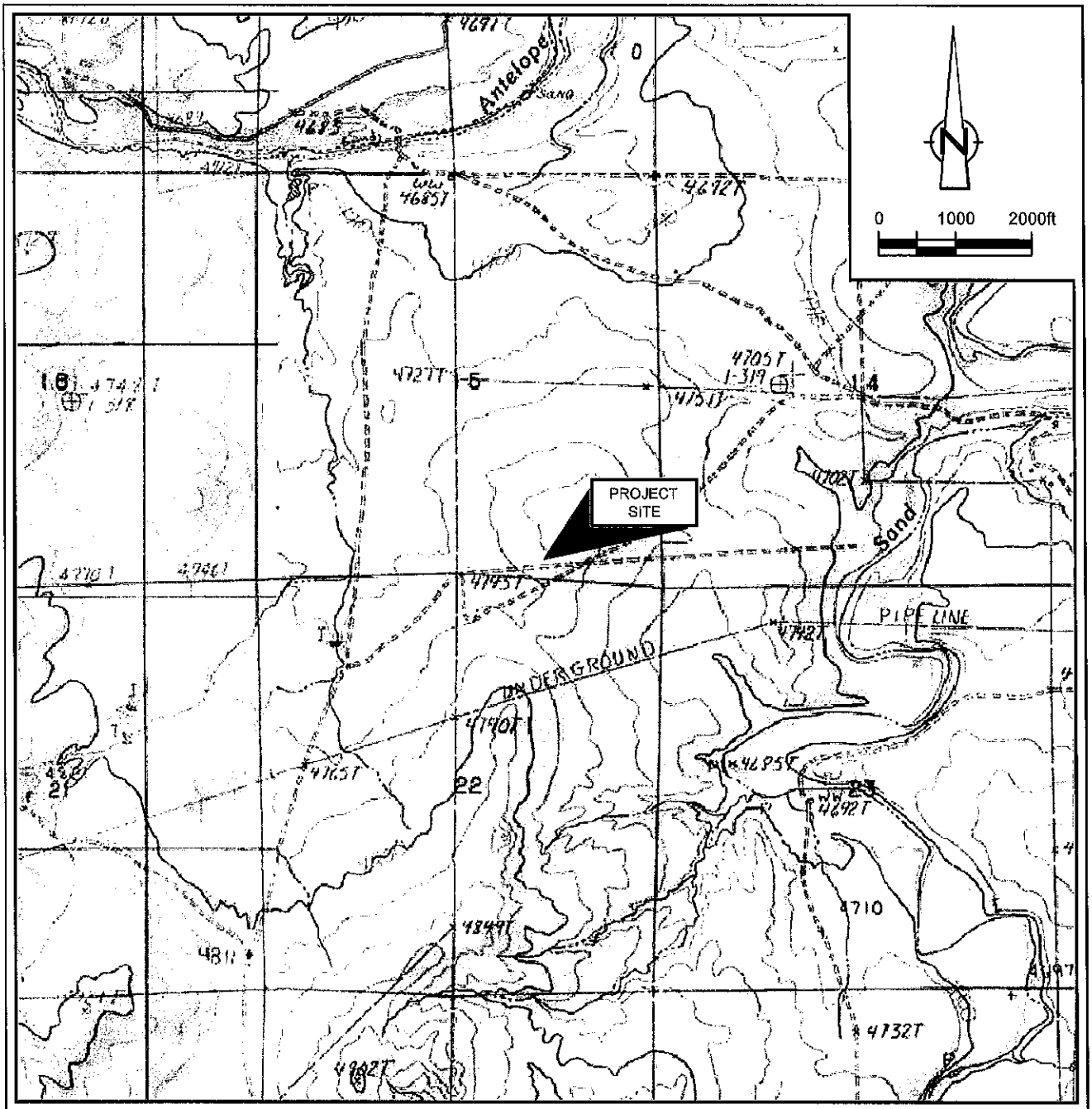

SOURCE: USGS 7.5 MINUTE QUAD
"BETTY RESERVOIR AND COAL DRAW NORTH, WYOMING"

LAT/LONG: 43.4361° NORTH, 105.4873° WEST
COORDINATE: NAD83 DATUM, U.S. FOOT
STATE PLANE ZONE - WYOMING EAST

figure 1

SITE LOCATION MAP
EOG RESOURCES
MARYS DRAW 411-15H
Converse County, Wyoming

086379-00(000)GN-DL001 DEC 16/2014

eog resources

Site Facility Diagram

Well Name: Marys Draw 411-15H
1/4 1/4: SW/SE Lot 15 Sec: 15 T: 40N R: 72W
Latitude: 43.436056 Longitude: -105.487300
County: Converse State: WY
Lease: WYW153116 Unit :
CA: WYW-180699 PA:
Type of well: Oil

EOG Resources, Inc. site facility diagrams & site security plans are available electronically at all EOG Resources, Inc. offices. Normal business hours are 7:00am to 4:30pm MST.

Revised: 12/10/2014

Valve	Production Phase	Sales Phase	Water Drain
PV	SO	SC	SC
SV	SC	SO	SC
EV	SO	SC	SC
LV	SC	SO	SC
RV	SC	SC	SC

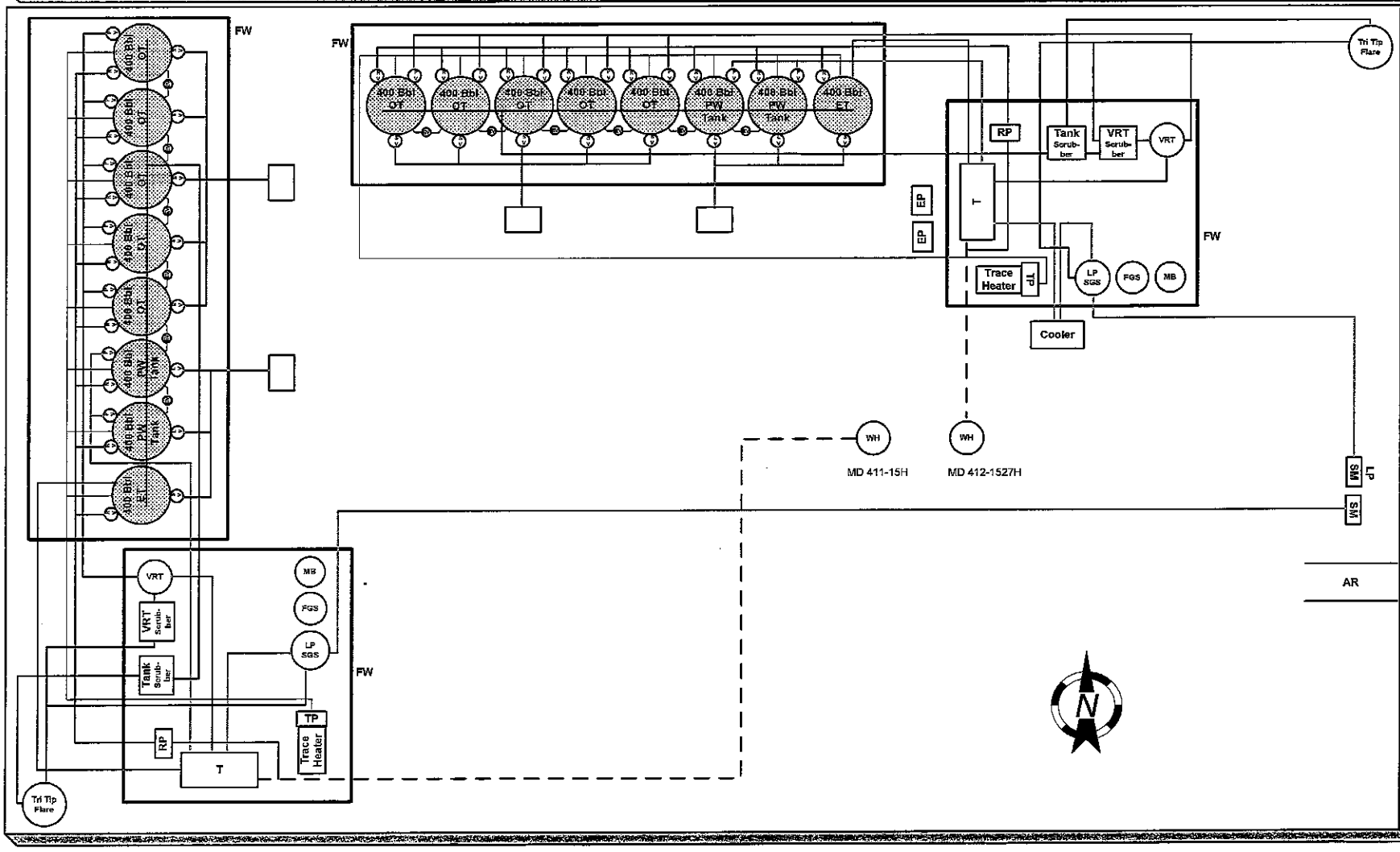

Abbreviations

AM= Allocation Meter
AR = Access Road
CHP = Chemical Pump
CHT = Chemical Tank
COM = Combuster
COMP = Compressor
COMT = Composite Treater
CONT = Containment Tub
CP = Charge Pump
CT = Condensate Tank
DH = Dehydrator
DL = Dump Line
EP = Electrical Panel
ET = Emergency Tank
EV = Equalizer Valve
FE = Fire Extinguisher
FGS = Fuel Gas Scrubber
FT = Fiberglass Tub
FW = Firewall (dimensions feet)
FWKO = Free Water Knockout
GB = Gas Buster
GEN = Generator
HP = High Pressure
LACT = LACT Unit
LH = Line Heater
LP = Low Pressure
LV = Load Valve
MAN = Manifold
MB = Methanol Bath
MBT = Methanol Bulk Tank
MP = Methanol Pump
OT = Oil Tank
PIGL = Pig Launcher
PIGR = Pig Receiver
PL = Production Line
POC = Pump Off Controller
PP = Power Pole
PRT = Product Tank
PT = Propane Tank
PU = Pumping Unit
PV = Production Valve
PW = Produced Water
RL = Recycle Line
RP = Recycle Pump
RV = Recycle Valve
SC = Sealed Closed
SGS = Sales Gas Scrubber
SL = Sales Line
SM = Sales Meter
SO = Sealed Open
SP = Separator
SUMP = Sump Pump
SV = Sales Valve
TM = Test Meter
TP = Trace Pump
TRFP = Transfer Pump
TT = Test Treater
VM = Vent Meter
VRT = Vapor Recovery Tower
UNP = Unload Pump
WDP = Water Disposal Pump
WD = Water Drain
WFP = Water Flood Pump
WH = Wellhead

Production Line
Recycle Line
Oil Line
Tank Vent
Produced Water Line
Gas Line
Oil & Water Line
Emergency Vent & Blowdown Line
Equalizer Lines
Heat Trace

Above Ground Line
Underground Line

eog resources

Site Facility Diagram

Well Name: Marys Draw 412-1527H
1/4 1/4: SW/SE Lot 15 Sec: 15 T: 40N R: 72W
Latitude: 43.436050 Longitude: -105.487211
County: Converse State: WY
Lease: WYW153117 Unit :
CA: WYW-183684 PA:
Type of well: Oil

EOG Resources, Inc. site facility diagrams & site security plans are available electronically at all EOG Resources, Inc. offices. Normal business hours are 7:00am to 4:30pm MST.

Revised: 12/10/2014

Valve	Production Phase	Sales Phase	Water Drain
PV	SO	SC	SC
SV	SC	SO	SC
EV	SO	SC	SC
LV	SC	SO	SC
RV	SC	SC	SC

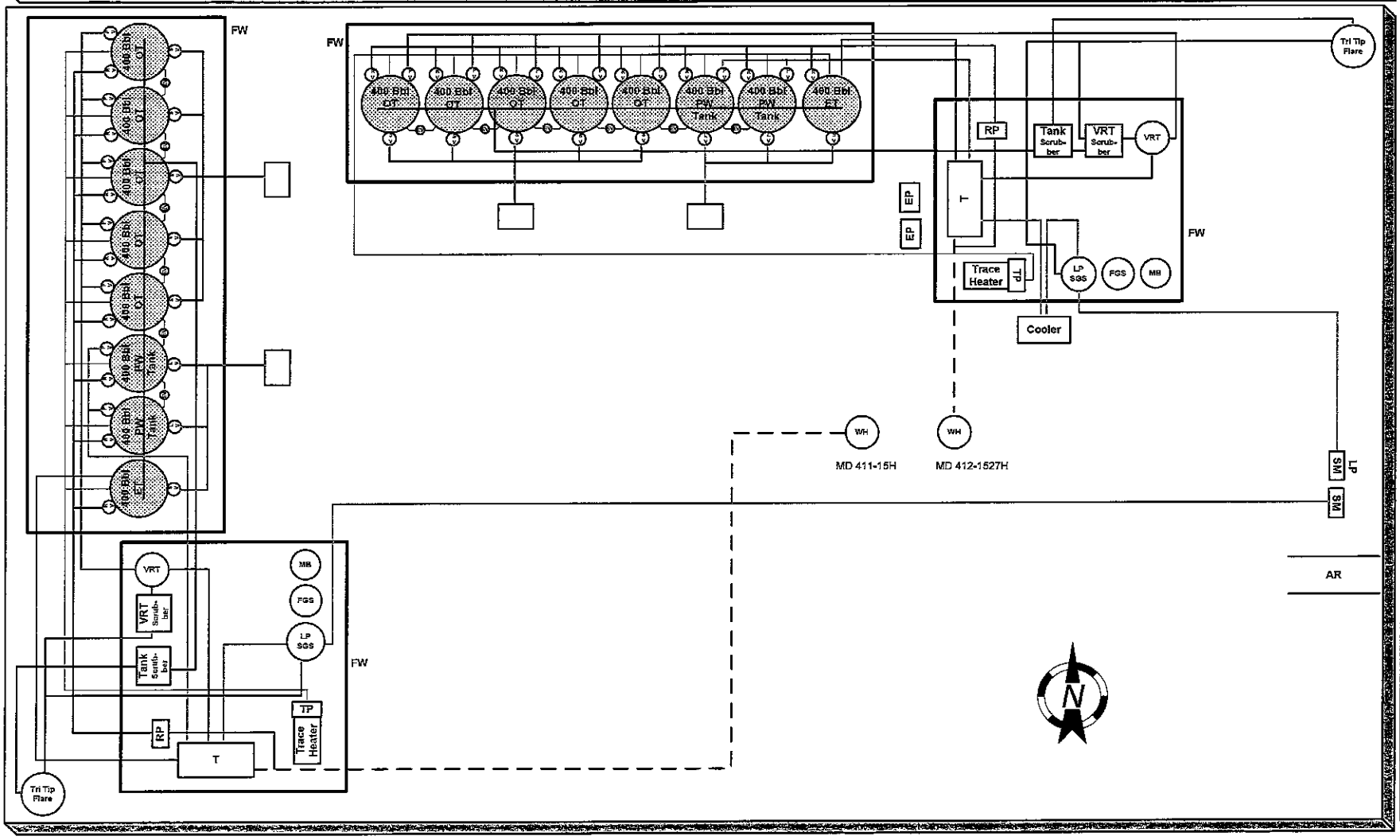

Abbreviations

AM= Allocation Meter
AR = Access Road
CHP = Chemical Pump
CHT = Chemical Tank
COM = Combuster
COMP = Compressor
COMT = Composite Treater
CONT = Containment Tub
CP = Charge Pump
CT = Condensate Tank
DH = Dehydrator
DL = Dump Line
EP = Electrical Panel
ET = Emergency Tank
EV = Equalizer Valve
FE = Fire Extinguisher
FGS = Fuel Gas Scrubber
FT = Fiberglass Tub
FW = Firewall (dimensions feet)
FWKO = Free Water Knockout
GB = Gas Buster
GEN = Generator
HP = High Pressure
LACT = LACT Unit
LH = Line Heater
LP = Low Pressure
LV = Load Valve
MAN = Manifold
MB = Methanol Bath
MBT = Methanol Bulk Tank
MP = Methanol Pump
OT = Oil Tank
PIGL = Pig Launcher
PIGR = Pig Receiver
PL = Production Line
POC = Pump Off Controller
PP = Power Pole
PRT = Product Tank
PT = Propane Tank
PU = Pumping Unit
PV = Production Valve
PW = Produced Water
RL = Recycle Line
RP = Recycle Pump
RV = Recycle Valve
SC = Sealed Closed
SGS = Sales Gas Scrubber
SL = Sales Line
SM = Sales Meter
SO = Sealed Open
SP = Separator
SUMP = Sump Pump
SV = Sales Valve
TM = Test Meter
TP = Trace Pump
TRFP = Transfer Pump
TT = Test Treater
VM = Vent Meter
VRT = Vapor Recovery Tower
UNP = Unload Pump
WDP = Water Disposal Pump
WD = Water Drain
WFP = Water Flood Pump
WH = Wellhead

Production Line
Recycle Line
Oil Line
Tank Vent
Produced Water Line
Gas Line
Oil & Water Line
Emergency Vent & Blowdown Line
Equalizer Lines
Heat Trace

Above Ground Line
Underground Line

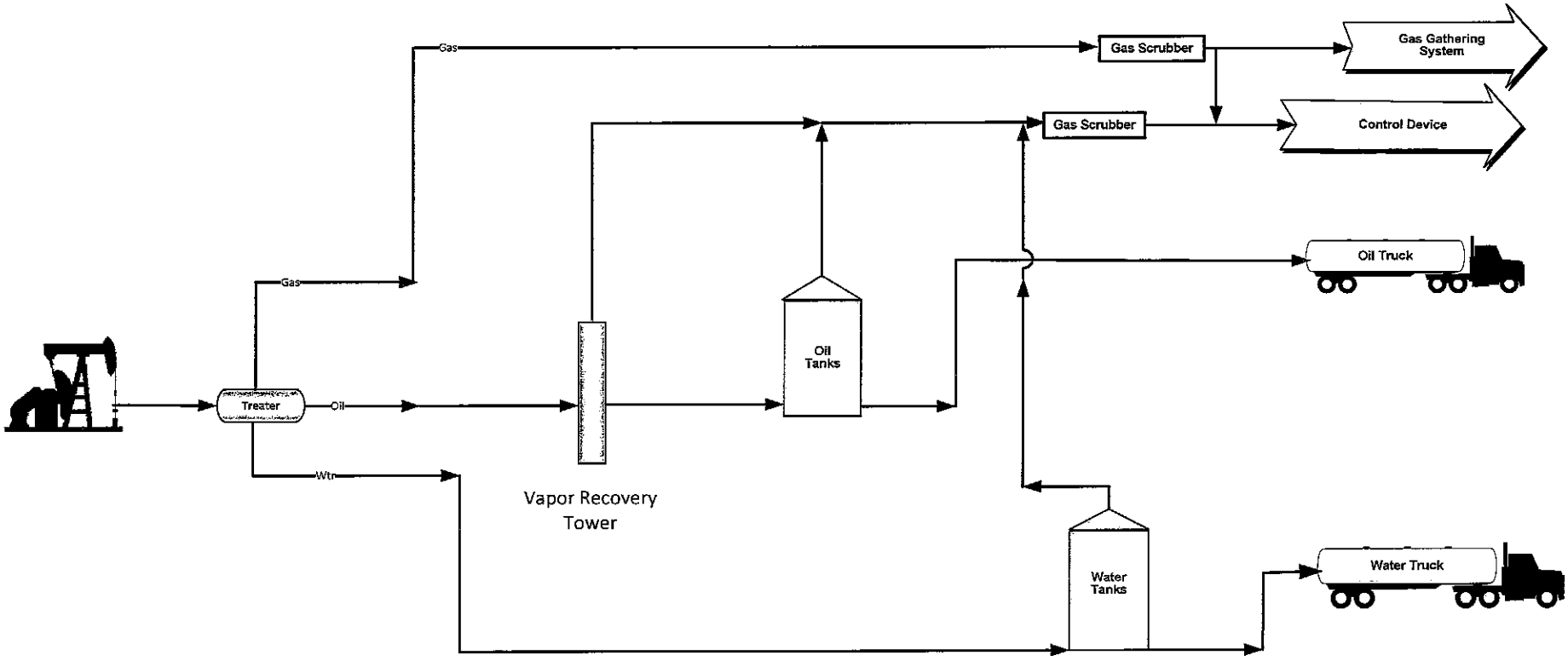

Figure 3
Process Flow Diagram
Mary's Draw 411-15H
Converse County, Wyoming

Note: Number of tanks will vary with production.

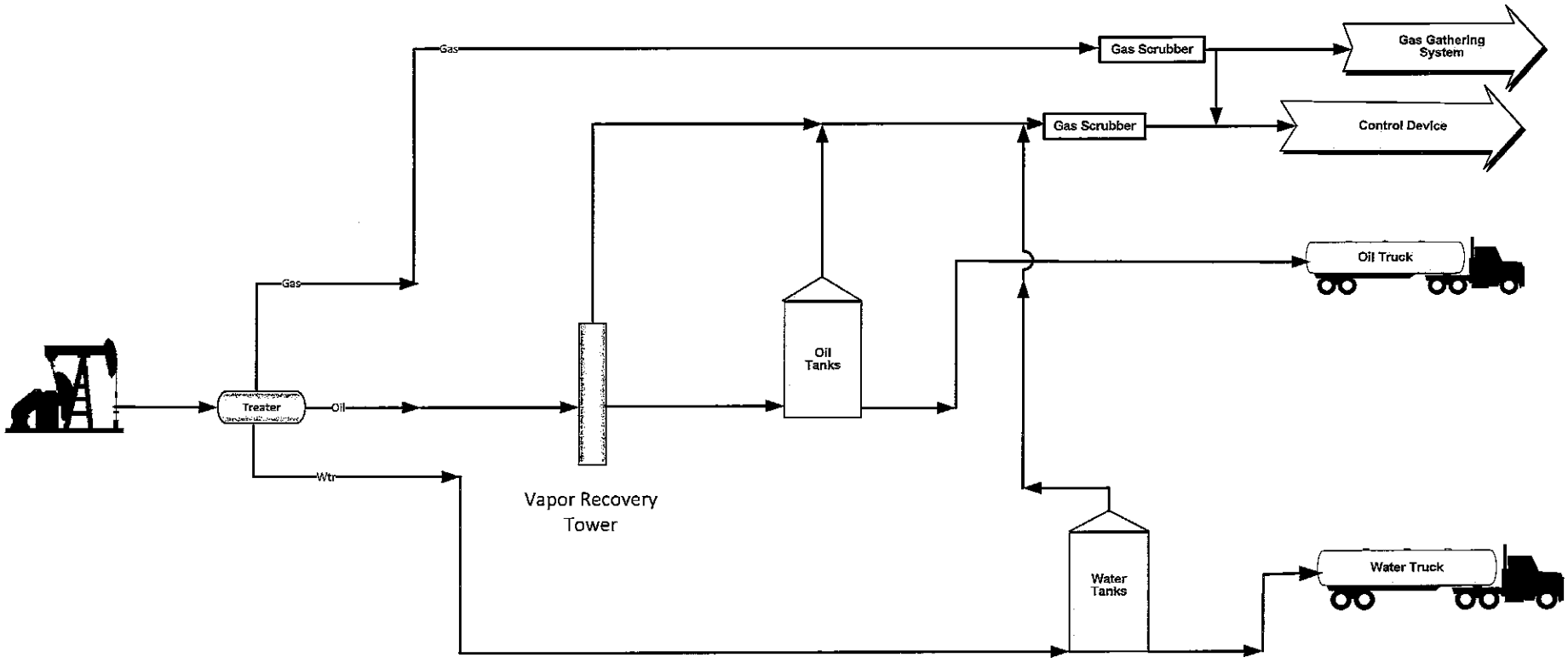

Figure 3
Process Flow Diagram
Mary's Draw 412-1527H
Converse County, Wyoming

Note: Number of tanks will vary with production.

Attachment C

Facility Process Description

Process Description
Mary's Draw 412-1527H, Mary's Draw 411-15H
Production Facility

Mary's Draw 412-1527H, Mary's Draw 411-15H is an oil and gas production facility located in Converse County, Wyoming that receives production from two wells. The wells produce both crude oil and natural gas.

The Mary's Draw 412-1527H well equipment consists of the following sources of emissions:

- Five (5) Crude Oil Storage Tanks (400 bbl capacity each);
- Two (2) Produced Water Storage Tanks (400 bbl capacity each);
- One (1) Emergency Storage Tank (400 bbl capacity);
- One (1) Treater (0.75 MMBtu/hr burner capacity);
- One (1) Trace Line Heater (0.375 MMBtu/hr burner capacity);
- One (1) Vapor Recovery Tower (VRT);
- One (1) Flare;
- Truck Loading Operation;
- Blowdowns; and
- Fugitive Components.

The Mary's Draw 411-15H well equipment consists of the following sources of emissions:

- Five (5) Crude Oil Storage Tanks (400 bbl capacity each);
- Two (2) Produced Water Storage Tanks (400 bbl capacity each);
- One (1) Emergency Storage Tank (400 bbl capacity);
- One (1) Treater (0.75 MMBtu/hr burner capacity);
- One (1) Trace Line Heater (0.375 MMBtu/hr burner capacity);
- One (1) Vapor Recovery Tower (VRT);
- One (1) Flare;
- Truck Loading Operation;
- Blowdowns; and
- Fugitive Components.

Gas and liquids rise to the surface through the well head. The gas/liquid mixture enters a treater to separate the natural gas, crude oil, and produced water. The natural gas stream is tied into a pipeline. In the event of pipeline shut-in, the gas from the heater treater can be

flared. Crude oil is sent to a vapor recovery tower (VRT) and water is sent to the produced water tanks. Oil from the VRT is sent to production oil tanks, and the flashed gas from the VRT and the tanks is sent to the flare. The crude oil is produced in five storage tanks and hauled away by truck. The water is produced in two storage tanks and also hauled away by truck as necessary. The tank vapors from the well's crude and produced water tanks are controlled and routed to a flare that has a destruction efficiency of 98%. The truck loading vapor emissions are controlled and routed to the flare with a capture efficiency of 70%.

Attachment D

Current Well Production Rates

MARYS DRAW 412-1527H

Date	Gas Prod (MSCFD)	Oil Prod (bpd)	Water Prod (bpd)
12/7/2014	388	1,049	530
12/6/2014	390	1,060	555
12/5/2014	382	1,075	536
12/4/2014	379	1,074	550
12/3/2014	393	1,093	604
12/2/2014	355	1,117	688
12/1/2014	405	1,114	583
11/30/2014	398	1,118	498
11/29/2014	393	1,122	606
11/28/2014	375	1,112	615
11/27/2014	339	1,096	766
11/26/2014	261	1,091	666
11/25/2014	235	1,070	594
11/24/2014	285	1,135	627
11/23/2014	277	1,138	634
11/22/2014	271	1,108	636
11/21/2014	335	1,133	665
11/20/2014	355	1,125	670
11/19/2014	304	1,121	680
11/18/2014	236	1,147	676
11/17/2014	269	1,137	556
11/16/2014	292	1,140	835
11/15/2014	321	1,132	733
11/14/2014	331	1,146	726
11/13/2014	298	1,136	722
11/12/2014	184	1,132	743
11/11/2014	216	1,117	742
11/10/2014	236	1,108	746
11/9/2014	330	1,115	592
11/8/2014	333	1,107	614
11/7/2014	271	1,127	627
11/6/2014	343	1,140	782
11/5/2014	261	933	605
11/4/2014	276	1,036	990
11/3/2014	314	1,050	701
11/2/2014	327	1,085	739
11/1/2014	325	1,081	745
10/31/2014	315	1,095	766
10/30/2014	361	1,095	761
10/29/2014	322	1,101	772
10/28/2014	343	1,107	772
10/27/2014	317	1,042	718
10/26/2014	327	1,051	748
10/25/2014	342	1,103	779

MARYS DRAW 412-1527H

Date	Gas Prod (MSCFD)	Oil Prod (bpd)	Water Prod (bpd)
10/24/2014	346	1,099	1,091
10/23/2014	331	1,072	1,197
10/22/2014	319	1,045	892
10/21/2014	326	1,053	745
10/20/2014	331	1,057	755
10/19/2014	333	1,059	766
10/18/2014	333	1,067	769
10/17/2014	330	1,023	785
10/16/2014	332	1,069	795
10/15/2014	328	1,053	822
10/14/2014	278	679	668
10/13/2014	329	1,092	822
10/12/2014	322	994	1,035
10/11/2014	323	1,167	1,170
10/10/2014	324	1,100	870
10/9/2014	326	940	900
10/8/2014	269	1,191	890
10/7/2014	311	1,013	875
10/6/2014	308	997	888
10/5/2014	302	996	982
10/4/2014	286	968	1,060
10/3/2014	288	948	1,030
10/2/2014	286	985	1,086
10/1/2014	288	847	1,040
9/30/2014	287	911	1,437
9/29/2014	268	963	1,205
9/28/2014	257	953	1,310
9/27/2014	249	686	1,355
9/26/2014	243	997	408
9/25/2014	228	751	1,353
9/24/2014	217	692	1,052
9/23/2014	129	628	1,805
9/22/2014	5	415	1,800
	Gas Prod (MSCFD)	Oil Prod (bpd)	Water Prod (bpd)
Average Daily Production	**304.44**	**1037.97**	**825.34**

MARYS DRAW 411-15H

Date	Gas Prod (MSCFD)	Oil Prod (bpd)	Water Prod (bpd)
12/7/2014	144	135	78
12/6/2014	233	225	124
12/5/2014	224	220	128
12/4/2014	242	244	141
12/3/2014	240	297	147
12/2/2014	250	228	145
12/1/2014	256	259	145
11/30/2014	255	240	153
11/29/2014	268	257	158
11/28/2014	268	259	153
11/27/2014	245	273	180
11/26/2014	121	286	150
11/25/2014	65	216	112
11/24/2014	144	270	183
11/23/2014	104	266	167
11/22/2014	183	282	188
11/21/2014	299	282	177
11/20/2014	316	293	184
11/19/2014	349	297	178
11/18/2014	97	289	178
11/17/2014	251	305	201
11/16/2014	225	306	170
11/15/2014	257	297	169
11/14/2014	254	290	143
11/13/2014	297	292	179
11/12/2014	341	338	238
11/11/2014	198	340	232
11/10/2014	229	336	209
11/9/2014	286	345	219
11/8/2014	256	357	242
11/7/2014	261	377	242
11/6/2014	326	395	231
11/5/2014	231	284	307
11/4/2014	285	362	215
11/3/2014	328	366	216
11/2/2014	320	372	217
11/1/2014	315	376	206
10/31/2014	264	412	236
10/30/2014	457	381	479
10/29/2014	331	421	249
10/28/2014	328	448	246
10/27/2014	258	363	190
10/26/2014	343	423	257

Date	Gas Prod (MSCFD)	Oil Prod (bpd)	Water Prod (bpd)
10/25/2014	337	440	251
10/24/2014	328	447	248
10/23/2014	319	446	258
10/22/2014	302	435	230
10/21/2014	276	417	215
10/20/2014	289	453	242
10/19/2014	294	484	256
10/18/2014	289	486	261
10/17/2014	281	497	268
10/16/2014	272	491	274
10/15/2014	261	510	264
10/14/2014	253	313	219
10/13/2014	245	635	369
10/12/2014	237	539	252
10/11/2014	216	332	277
10/10/2014	192	495	232
10/9/2014	171	572	300
10/8/2014	169	299	340
10/7/2014	198	531	283
10/6/2014	184	529	293
10/5/2014	176	544	298
10/4/2014	159	479	265
10/3/2014	172	526	448
10/2/2014	167	483	450
10/1/2014	165	479	240
9/30/2014	177	415	563
9/29/2014	184	423	448
9/28/2014	187	489	472
9/27/2014	178	443	600
9/26/2014	183	498	600
9/25/2014	100	612	450
9/24/2014	5	220	600
	Gas Prod (MSCFD)	**Oil Prod (bpd)**	**Water Prod (bpd)**
Average Daily Production	**238.80**	**376.88**	**255.04**

Attachment E

Gas/Oil Analyses

PRECISION ANALYSIS
GAS MEASUREMENT EMISSIONS TESTING LABORATORY
307.856.0866
www.precision-labs.com

EXTENDED HYDROCARBON LIQUID STUDY
CERTIFICATE OF ANALYSIS

Company:	**EOG Resources Podwer River Basin**	Sample Name:	**MARY'S DRAW 412-1527H**
Date Sampled:	10/29/2014	Sample Number:	14110303-10
Sample Location:	Wyoming	Date Tested:	11/07/2014
Sample Pressure:	68 PSI	Test Method:	GPA 2186M
Sample Temperature:	143 DEG F		
County:	Converse	Date Reported:	11/11/2014
Sample Source:	Treater	Note: Due to the nature of H2S, the values of	
Sampling Method:	GPA 2174	H2S reported may be lower than actual.	
Type Sample:	SPOT		

Components	Mole %	Weight %	Liq. Vol. %
Hydrogen Sulfide	0.0000	0.000	0.000
Oxygen	0.0000	0.000	0.000
Carbon Dioxide	0.0639	0.015	0.013
Nitrogen	0.0272	0.004	0.004
Methane	1.3600	0.113	0.280
Ethane	0.8697	0.135	0.282
Propane	3.5145	0.799	1.175
iso-Butane	1.3838	0.415	0.550
n-Butane	3.9292	1.178	1.503
iso-Pentane	2.5982	0.967	1.153
n-Pentane	2.9466	1.096	1.296
Hexanes	2.3867	1.061	1.191
Heptanes	5.4106	2.796	3.030
Octanes	4.8882	2.880	3.039
Nonanes	1.3170	0.871	0.899
Decanes+	64.2971	85.226	83.183
Benzene	0.0646	0.026	0.022
Toluene	1.0969	0.521	0.446
Ethylbenzene	0.1621	0.089	0.076
Xylenes	1.1345	0.621	0.535
n-Hexane	2.1661	0.963	1.081
2,2,4-Trimethylpentane	0.3832	0.226	0.242
Totals	100.000	100.000	100.000

EXTENDED ANALYSIS DATA

Components	Mole %	Weight %	Liq. Vol. %
Hydrogen Sulfide	0.0000	0.000	0.000
Carbon Dioxide	0.0639	0.015	0.014
Nitrogen	0.0272	0.004	0.004
Methane	1.3600	0.113	0.285
Ethane	0.8697	0.135	0.288
Propane	3.5145	0.800	1.199
iso-Butane	1.3838	0.415	0.561
n-Butane	3.9292	1.179	1.533
iso-Pentane	2.5982	0.968	1.176
n-Pentane	2.9466	1.097	1.322
Hexanes	2.3867	1.062	1.215
Heptanes	5.4106	2.798	3.090
Octanes	4.8882	2.882	3.100
Nonanes	1.3170	0.872	0.917
Decanes	4.9213	3.614	3.739
Benzene	0.0646	0.026	0.022
Toluene	1.0969	0.522	0.454
Ethylbenzene	0.1621	0.089	0.077
Xylenes	1.1345	0.622	0.546
n-Hexane	2.1661	0.963	1.103
2,2,4-Trimethylpentane	0.3832	0.226	0.246
Undecanes(C11)	3.7283	3.008	3.070
Dodecanes(C12)	4.3207	3.799	3.831
Tridecanes(C13)	5.1064	4.859	4.854
Tetradecanes(C14)	3.7485	3.838	3.801
Pentadecanes(C15)	4.3287	4.746	4.669
Hexadecanes(C16)	4.9877	5.829	5.654
Heptadecanes(C17)	3.2795	4.070	3.913
Octadecanes(C18)	3.0075	3.951	3.771
Nonadecanes(C19)	2.6188	3.630	3.408
Eicosanes (C20)	2.9858	4.354	4.196
Heneicosanes (C21)	2.8093	4.300	4.127
Docosanes (C22)	2.2468	3.602	3.519
Tricosanes (C23)	1.9506	3.268	3.117
Tetracosanes (C24)	1.7951	3.138	2.992
Pentacosanes (C25)	2.2232	4.047	3.840
Hexacosanes (C26)	1.6963	3.211	3.136
Heptacosanes (C27)	2.4958	4.905	4.779
Octacosanes (C28)	1.4923	3.041	2.864
Nonacosanes (C29)	1.3079	2.760	2.596
Triacosanes (C30)	1.0249	2.237	2.099
Hentriacontane Plus (C31+)	2.2217	5.009	4.875
Totals	100.000	100.000	100.000

ADDITIONAL BTEX DATA

Components	Mole %	Weight %	Liq. Vol. %
2-Methylpentane	1.707	0.758	0.852
3-Methylpentane	0.680	0.302	0.339
n-Hexane	2.166	0.963	1.081
2,2,4-Trimethylpentane	0.383	0.226	0.242
Benzene	0.065	0.026	0.022
Toluene	1.097	0.521	0.446
Ethylbenzene	0.162	0.089	0.076
m-Xylene	0.130	0.071	0.062
p-Xylene	0.811	0.444	0.382
o-Xylene	0.193	0.106	0.091

RELATIVE SPECIFIC GRAVITY OF DECANES+ (C10+) FRACTION, calculated	**0.76405**
AVERAGE MOLECULAR WEIGHT	**193.750**
AVERAGE MOLECULAR WEIGHT OF DECANES+ (C10+) FRACTION, calculated	**257.013**
TRUE VAPOR PRESSURE AT 100 F, PSIA, calculated	**86.013**
AVERAGE BOILING POINT, F, calculated	**529.189**
CUBIC FEET OF GAS / GALLON OF LIQUID, as Ideal Gas, calculated	**17.931**
BTU / GALLON OF LIQUID AT 14.73 PSIA, calculated	**124,398.80**
LBS / GALLON OF LIQUID, calculated	**6.217**

NOTATION: ALL CALCULATIONS PERFORMED USING PHYSICAL CONSTANTS FROM GPA 2145-09, THE TABLES OF PHYSICAL CONSTANTS FOR HYDROCARBONS AND OTHER COMPOUNDS OF INTEREST TO THE NATURAL GAS INDUSTRY.

FLASHED CRUDE OIL LIQUID STUDIES
CERTIFICATE OF ANALYSIS

Sample Name: **MARY'S DRAW 412-1527H**
Sample Number: 14110303-09

TEST PERFORMED	RESULTS	DATE TESTED
API GRAVITY AT 60/60 F, (ASTM D-7777), calculated from SG	39.5	11/10/2014
API GRAVITY AT 100/100 F, (ASTM D-7777), calculated from SG	40.2	11/10/2014
REID VAPOR PRESSURE (ASTM D6377), PSIG AT 100 F, measured	3.84	11/04/2014
BOTTOM SEDIMENT & WATER (ASTM D-4007), weight %, measured	<0.025	11/10/2014
CLOUD POINT (ASTM D-97), deg F, measured	35.6	11/10/2014
POUR POINT (ASTM D-97), deg F, measured	-31.0	11/10/2014
SULFUR CONTENT BY XRAY (ASTM D-4294), weight %, measured	0.0578	11/07/2014
PARAFFIN CONTENT (UOP-46), weight %, measured	46.986	11/07/2014
EOG GRINDOUT (EOG METHOD), volume %, measured	0.250	11/11/2014
KINEMATIC VISCOSITY AT 100 F (ASTM D-445),	38.000	11/11/2014
KINEMATIC VISCOSITY AT 120 F (ASTM D-445),	35.135	11/11/2014
ASPHALTENES (ASTM D-3279), weight %, CL	0.10	11/12/2014

PRECISION ANALYSIS
GAS MEASUREMENT EMISSIONS TESTING LABORATORY
307.856.0866
www.precision-labs.com

ASTM D86 Distillation
Certificate of Analysis

Date Tested:	**11/10/2014**	**Qualifiers:**
	% Recovery	DEG C @ 300mm Hg
	Intial Boiling Point	40
	5	68
	10	81
	20	99
	30	120
	40	201
	50	254
	60	280
	70	295
	78	300
	Final Boiling Point	N/A
	Volume % Recovery	78
	Volume % Residue	20
	Volume % Loss	2

Comments: Residue and loss observed
Temperatures are uncorrected for barometric pressure

Temperatures are uncorrected for barometric pressure

Attachment F

Detailed Emission Calculations and Supporting Documentation

TOTAL FACILITY EMISSIONS SUMMARY

Mary's Draw 412-1527H, Mary's Draw 411-15H

UNCONTROLLED EMISSIONS

SOURCE	VOC	HAP	NOx	CO	H_2S	SO_2	CO_2e[a]
	(TPY)						(MT/yr)
Oil Tanks and VRT	1,760.62	52.29	--	--	0.00	--	
Water Tanks	1.90	0.09	--	--	--	--	
Treater Burner	0.04	0.01	0.64	0.54	0.00	0.00	
Truck Loading	15.08	0.05	--	--	--	--	
Fugitive	9.81	0.47	--	--	--	--	
Line Heater	0.02	0.01	0.32	0.27	0.00	0.00	
Blowdowns	0.04	0.05	--	--	--	--	
Totals	**1,787.50**	**52.92**	**0.97**	**0.81**	**0.00**	**0.00**	**1,405.58**

CONTROLLED EMISSIONS

SOURCE	VOC	HAP	NOx	CO	H_2S	SO_2	CO_2e
	(TPY)						(MT/yr)
VRT (Flashing)	34.88	1.04	--	--	0.00	--	
Oil Tanks	0.33	0.00	--	--	0.00	--	
Water Tanks	0.04	0.00	--	--	0.00	--	
Engineered Flare[b]	44.66	4.75	15.09	3.77	0.00	0.00	
Treater Burner	0.04	0.01	0.64	0.54	0.00	0.00	
Truck Loading	4.53	0.01	--	--	--	--	
Fugitive	9.81	0.47	--	--	--	--	
Line Heater	0.02	0.01	0.32	0.27	0.00	0.00	
Blowdowns	0.04	0.05	0.00	0.00	0.00	0.00	
Totals	**94.34**	**11.55**	**15.73**	**4.31**	**0.00**	**0.00**	**23,750.29**

Notes:

[a]Uncombusted GHG

[b]VRT, Oil Tanks, Water Tanks, and Truck Loading emissions are controlled by flare.

Mary's Draw 412-1527H
Detailed Emission Calculations and Supporting Documentation

TABLE 1

FACILITY INFORMATION SUMMARY - Mary's Draw 412-1527H

FACILITY INFORMATION		
Facility ID	Mary's Draw 412-1527H	Name of the facility

PRODUCTION DATA		DESCRIPTION
Daily Average Oil Production Rate	1038	Average daily production in barrels of oil per day (BOPD), based on the first 365 days of production.
Produced Water Tank Throughput	816.7	Average daily production in barrels of water per day (BWPD), based on the first 365 days of production.
Daily Average Gas Production Rate	304.4	Average daily production of gas in Mscf per day, based on the first 365 days of production.

OIL/CONDENSATE TANKS		DESCRIPTION
Molecular Weight	44.26	Molecular weight of the tank vapors in pounds per pound-mole (lb/lb-mole). Obtained from promax.
VOC%	78.75	VOC weight fraction of the tank vapor gas (C3+). Obtained from Promax.
HAP%	0.74	HAP weight fraction of the tank vapor gas. Obtained from Promax.
H_2S weight %	0.00	H_2S weight percent of the tank vapor gas. Obtained from Promax.
Flare Efficiency	98%	Flare destruction efficiency to control tank vapor emissions

TREATER GAS DATA		DESCRIPTION
Heating Value	1,354.4	Btu/scf of wellstream gas.
Molecular Weight	27.38	Average molecular weight of the wellstream gas in lb/lb-mole.
Specific Gravity	0.95	If necessary to convert specific gravity to molecular weight, enter the specific gravity of the wellstream gas.
Calculated Molecular Weight	27.38	Calculated molecular weight based on the specific gravity entered above.
VOC%	45.46%	VOC weight fraction of the wellstream gas (C3+).
HAP%	3.75%	HAP weight fraction of the wellstream gas.
H_2S weight %	0.000%	H_2S weight percent of the wellstream gas
H_2S mole %	0.000%	H_2S mole percent of the wellstream gas

HEATER TREATER		DESCRIPTION
Firing Rate	750,000	Burner rating for the heater treater in Btu/hr.
Hours of Operation	8,760	The burner is assumed to operate 8,760 hours per year.

TRUCK LOADING		DESCRIPTION
Oil is hauled by truck		If sales oil pipeline is unavailable, oil will be hauled by truck
Submerged loading: dedicated normal service	0.6	Submerged loading: dedicated normal service
Molecular Weight	44.3	Molecular weight of tank vapors in lb/lb-mole (obtained from Promax)
Vapor Pressure	0.00	True vapor pressure of liquid loaded, pounds per square inch absolute (psia).
Temperature	46	Estimated average annual temperature of liquid loaded in °F
Load Rate (bbl/hr)	200	Maximum load rate of liquid loaded in barrels per hour.
Load Time (hrs)	1	The time it takes to loadout one load (hrs).

MISCELLANEOUS		DESCRIPTION
Pilot Fuel consumption	0.14	Fuel consumption in scf/min

TABLE 2

EMISSIONS SUMMARY - Mary's Draw 412-1527H

UNCONTROLLED EMISSIONS

SOURCE	VOC	HAP	NOx	CO	H_2S	SO_2	CO_2e[a]
	(TPY)						(MT/yr)
Oil Tanks and VRT	1,303	38.53	--	--	0.00	--	
Water Tanks	1.46	0.07	--	--	--	--	
Treater Burner	0.02	0.01	0.32	0.27	0.00	0.00	
Truck Loading	0.00	0.00	--	--	--	--	
Fugitive	4.90	0.24	--	--	--	--	
Line Heater	0.01	0.00	0.16	0.14	0.00	0.00	
Blowdowns	0.02	0.02					
Totals	**1,309.36**	**38.85**	**0.48**	**0.41**	**0.00**	**0.00**	**760.75**

CONTROLLED EMISSIONS

SOURCE	VOC	HAP	NOx	CO	H_2S	SO_2	CO_2e
	(TPY)						(MT/yr)
VRT (Flashing)	25.86	0.77	--	--	0.00	--	
Oil Tanks	0.20	0.00	--	--	0.00	--	
Water Tanks	0.03	0.00	--	--	0.00	--	
Engineered Flare[b]	26.05	2.53	7.63	1.91	0.00	0.00	
Treater Burner	0.02	0.01	0.32	0.27	0.00	0.00	
Truck Loading	0.00	0.00	--	--	--	--	
Fugitive	4.90	0.24	--	--	--	--	
Line Heater	0.01	0.00	0.16	0.14	0.00	0.00	
Blowdowns	0.02	0.02					
Totals	**57.08**	**6.32**	**7.95**	**2.18**	**0.00**	**0.00**	**13,917.42**

Notes:

[a]Uncombusted GHG

[b]VRT, Oil Tanks, Water Tanks, and Truck Loading emissions are controlled by flare.

TABLE 3

HAZARDOUS AIR POLLUTANT (HAP) EMISSIONS SUMMARY - Mary's Draw 412-1527H

UNCONTROLLED HAP EMISSION SUMMARY

SOURCE	POTENTIAL TO EMIT (TPY)					
	BENZENE	TOLUENE	ETHYLBENZENE	XYLENE	2,2,4 TMP	N-HEXANE
Oil Tanks and VRT	0.05	17.09	1.07	3.52	4.06	12.74
Water Tanks	0.00	0.04	0.00	0.01	0.00	0.02
Engineered Flare	0.05	17.74	1.10	3.61	4.23	13.03
Heater Treater	0.00	0.00	0.00	0.00	0.00	0.01
Truck Loading	0.00	0.00	0.00	0.00	0.00	0.00
Fugitive	0.00	0.02	0.02	0.02	0.07	0.10
Total	**0.10**	**34.88**	**2.19**	**7.16**	**8.36**	**25.90**

CONTROLLED HAP EMISSION SUMMARY

SOURCE	POTENTIAL TO EMIT (TPY)					
	BENZENE	TOLUENE	ETHYLBENZENE	XYLENE	2,2,4 TMP	N-HEXANE
Oil Tanks and VRT	0.00	0.34	0.02	0.07	0.08	0.25
Water Tanks	0.00	0.00	0.00	0.00	0.00	0.00
Engineered Flare	0.00	0.35	0.02	0.07	0.08	0.26
Heater Treater	0.00	0.00	0.00	0.00	0.00	0.01
Truck Loading	0.00	0.00	0.00	0.00	0.00	0.00
Fugitive	0.00	0.02	0.02	0.02	0.07	0.10
Total	**0.01**	**0.71**	**0.06**	**0.17**	**0.24**	**0.62**

Notes:

[a]No Gas Pipeline - gas produced from treater will be sent to engineered flare

[b]With Gas Pipeline - gas produced from treater will be sent to the gas pipeline

TABLE 5

WORKING, BREATHING & FLASHING EMISSIONS-WATER TANKS - Mary's Draw 412-1527H

Flashing Emissions

Flare Control Efficiency % 98

Component	Uncontrolled Emissions		Controlled Emissions	
	TPY	lb/hr	TPY	lb/hr
Water	0.095	0.022	0.002	0.000
Hydrogen Sulfide	0.000	0.000	0.000	0.000
Oxygen	0.000	0.000	0.000	0.000
Carbon Dioxide	0.672	0.153	0.013	0.003
Nitrogen	0.030	0.007	0.001	0.000
Methane	2.033	0.464	0.041	0.009
Ethane	0.583	0.133	0.012	0.003
Propane	0.669	0.153	0.013	0.003
iso-Butane	0.082	0.019	0.002	0.000
n-Butane	0.384	0.088	0.008	0.002
iso-Pentane	0.087	0.020	0.002	0.000
n-Pentane	0.096	0.022	0.002	0.000
Heptanes	0.035	0.008	0.001	0.000
Octanes	0.006	0.001	0.000	0.000
Nonanes	0.001	0.000	0.000	0.000
Decanes+	0.028	0.006	0.001	0.000
Benzene	0.000	0.000	0.000	0.000
Toluene	0.037	0.009	0.001	0.000
Ethylbenzene	0.002	0.001	0.000	0.000
Xylenes	0.006	0.001	0.000	0.000
n-Hexane	0.023	0.005	0.000	0.000
2,2,4-Trimethylpentane	0.000	0.000	0.000	0.000
Total	4.869	1.112	0.097	0.022

Flashing Emissions Summary

Component	Uncontrolled Emissions		Controlled Emissions	
	TPY	lb/yr	TPY	lb/yr
VOC	1.456	0.332	0.029	0.007
H2S	0.000	0.000	0.000	0.000
HAPs	0.068	0.016	0.001	0.000

Working & Breathing Emissions

Flare Control Efficiency % 98

Component	Uncontrolled Emissions		Controlled Emissions	
	TPY	lb/hr	TPY	lb/hr
Water	0.112	0.025	0.002	0.001
Hydrogen Sulfide	0.000	0.000	0.000	0.000
Oxygen	0.000	0.000	0.000	0.000
Carbon Dioxide	0.040	0.009	0.001	0.000
Nitrogen	0.000	0.000	0.000	0.000
Methane	0.006	0.001	0.000	0.000
Ethane	0.001	0.000	0.000	0.000
Propane	0.000	0.000	0.000	0.000
iso-Butane	0.000	0.000	0.000	0.000
n-Butane	0.000	0.000	0.000	0.000
iso-Pentane	0.000	0.000	0.000	0.000
n-Pentane	0.000	0.000	0.000	0.000
Heptanes	0.000	0.000	0.000	0.000
Octanes	0.000	0.000	0.000	0.000
Nonanes	0.000	0.000	0.000	0.000
Decanes+	0.000	0.000	0.000	0.000
Benzene	0.000	0.000	0.000	0.000
Toluene	0.000	0.000	0.000	0.000
Ethylbenzene	0.000	0.000	0.000	0.000
Xylenes	0.000	0.000	0.000	0.000
n-Hexane	0.000	0.000	0.000	0.000
2,2,4-Trimethylpentane	0.000	0.000	0.000	0.000
Total	0.159	0.036	0.003	0.001

Working & Breathing Emissions Summary

Component	Uncontrolled Emissions		Controlled Emissions	
	TPY	lb/hr	TPY	lb/hr
VOC	0.000	0.000	0.000	0.000
H2S	0.000	0.000	0.000	0.000
HAPs	0.000	0.000	0.000	0.000

Notes:
Water is flashed in the tanks and is captured by the flare.
Working, Breathing & Flashing emissions obtained fromPromax

TABLE 6
ENGINEERED FLARE EMISSIONS - Mary's Draw 412-1527H

Volume of Gas sent to Flare	220,465.5	scf/day
Lower Heating Value	1,354	Btu/scf
Average Molecular Weight	27.38	lb/lb-mole
Standard Molar Volume		
VOC Weight %	45.46%	
HAP Weight %	3.75%	
H_2S Weight %	0.00%	
H_2S Mole %	0.00%	
Flare Destruction Efficiency	98.00%	
Pipeline Downtime[2]	85%	

EMISSION RATE CALCULATION

Pollutant	Volume of Gas		Std Mol Vol	MW	Wt%	Usage	Flare Inlet (Uncontrolled) Emissions		Flare Outlet (Controlled) Emissions	
							Hourly	Annual	Hourly	Annual
	scf/day	*scf/hr*	*scf/lb-mol*	*lb/lb-mole*	*wt%*	*hrs/yr*	*lbs/hr*	*tpy*	*lbs/hr*	*tpy*
VOC	220,466	9,186	379	27.38	45.46%	8760	595.13	2606.68	11.90	52.13
HAP	220,466	9,186	379	27.38	3.75%	8760	37.68	165.05	0.75	3.30
H_2S	220,466	9,186	379	27.38	0.00%	8760	0.00	0.00	0.00	0.00
	Volume of Gas		Std Mol Vol	MW	E.F.[1]	Usage	Hourly	Annual	Hourly	Annual
	scf/day	*scf/hr*	*scf/lb-mol*	*lb/lb-mole*	*lb/ MMBtu*	*hr/yr*	*lbs/hr*	*tpy*	*lb/hr*	*tpy*
NO_x	220,466	9,186			0.14	8760	0.00	0.00	1.74	7.63
CO	220,466	9,186			0.035	8760	0.00	0.00	0.44	1.91
SO_2	220,466	9,186	379	64		8760	0.00	0.00	0.00	0.00

HAP SPECIATED EMISSIONS

		Emissions				
		Uncontrolled				Controlled
HAP	Weight	Treater Gas	F/W/B (Oil Tanks)	F/W/B (Water Tanks)	Total	Total
	%		*tpy*			*tpy*
Benzene	0.00	0.0008	0.0505	0.0000	0.0513	0.0010
Toluene	0.39	0.6492	17.0878	0.0373	17.7371	0.3547
Ethylbenzene	0.02	0.0318	1.0700	0.0023	1.1018	0.0220
Xylenes	0.05	0.0834	3.5247	0.0056	3.6081	0.0722
2,2,4-Trimethylpentane	0.10	0.1710	4.0565	0.0003	4.2275	0.0845
n-hexane	0.17	0.2826	12.7432	0.0226	13.0258	0.2605

Sample Calculations

Uncontrolled Emissions (VOC, HAP. and H_2S) = (volume of gas, scf/hr) * (weight, %) * (MW, lb/lbmol) * (conversion factor, scf/lbmol)
Controlled Emissions (VOC, HAP, and H_2S) = (emission rate, lbs/hr) * (1-destruction efficiency, %)
Emissions from NO_x and CO = (volume of gas, scf/hr) * (Lower heating value, Btu/scf) * (Emission factor, lb/MMBtu) * (Btu/MMBtu)

[1]NOx & CO emission factors are from AP-42 Table 13.5-1 ((Emission Factors for Flare Operations).)
HAP Speciation based on Extended Gas Analysis for Tank Vapor
[2]In the event of pipeline shut-in, the gas from the heater treater is flared.

TABLE 4

WORKING, BREATHING & FLASHING EMISSIONS-OIL TANKS - Mary's Draw 412-1527H

Flashing Emissions

Flare Control Efficiency % 98

Component	Uncontrolled Emissions		Controlled Emissions	
	TPY	lb/hr	TPY	lb/hr
Water	15.038	3.433	0.301	0.069
Hydrogen Sulfide	0.000	0.000	0.000	0.000
Oxygen	0.000	0.000	0.000	0.000
Carbon Dioxide	26.393	6.026	0.528	0.121
Nitrogen	0.796	0.182	0.016	0.004
Methane	89.967	20.540	1.799	0.411
Ethane	103.535	23.638	2.071	0.473
Propane	356.764	81.453	7.135	1.629
iso-Butane	116.217	26.534	2.324	0.531
n-Butane	282.371	64.468	5.647	1.289
Iso-Pentane	124.483	28.421	2.490	0.568
n-Pentane	117.924	26.923	2.358	0.538
Heptanes	101.956	23.278	2.039	0.466
Octanes	43.183	9.859	0.864	0.197
Nonanes	5.097	1.164	0.102	0.023
Decanes+	106.727	24.367	2.135	0.487
Benzene	0.050	0.012	0.001	0.000
Toluene	17.039	3.890	0.341	0.078
Ethylbenzene	1.068	0.244	0.021	0.005
Xylenes	3.518	0.803	0.070	0.016
n-Hexane	12.722	2.905	0.254	0.058
2,2,4-Trimethylpentane	4.044	0.923	0.081	0.018
Total	1528.890	349.062	30.578	6.981

Flashing Emissions Summary

Component	Uncontrolled Emissions		Controlled Emissions	
	TPY	lb/hr	TPY	lb/hr
VOC	1293.162	295.242	25.863	5.905
H2S	0.000	0.000	0.000	0.000
HAPs	38.441	8.776	0.769	0.176

Working & Breathing Emissions

Flare Control Efficiency % 98

Component	Uncontrolled Emissions		Controlled Emissions	
	TPY	lb/hr	TPY	lb/hr
Water	0.000	0.000	0.000	0.000
Hydrogen Sulfide	0.000	0.000	0.000	0.000
Oxygen	0.000	0.000	0.000	0.000
Carbon Dioxide	0.347	0.079	0.007	0.002
Nitrogen	0.001	0.000	0.000	0.000
Methane	0.504	0.115	0.010	0.002
Ethane	1.790	0.409	0.036	0.008
Propane	4.366	0.997	0.087	0.020
Iso-Butane	0.991	0.226	0.020	0.005
n-Butane	2.196	0.501	0.044	0.010
Iso-Pentane	0.756	0.173	0.015	0.003
n-Pentane	0.655	0.150	0.013	0.003
Heptanes	0.419	0.096	0.008	0.002
Octanes	0.128	0.029	0.003	0.001
Nonanes	0.011	0.003	0.000	0.000
Decanes+	0.177	0.040	0.004	0.001
Benzene	0.000	0.000	0.000	0.000
Toluene	0.049	0.011	0.001	0.000
Ethylbenzene	0.002	0.001	0.000	0.000
Xylenes	0.006	0.001	0.000	0.000
n-Hexane	0.021	0.005	0.000	0.000
2,2,4-Trimethylpentane	0.013	0.003	0.000	0.000
Total	12.432	2.838	0.249	0.057

Working & Breathing Emissions Summary

Component	Uncontrolled Emissions		Controlled Emissions	
	TPY	lb/hr	TPY	lb/hr
VOC	9.791	2.235	0.196	0.045
H2S	0.000	0.000	0.000	0.000
HAPs	0.092	0.021	0.002	0.000

Notes:

Oil is flashed in a Vapor Recovery Tower and is captured by the flare.

Working, Breathing & Flashing emissions obtained from Promax

TABLE 7

HEATER TREATER BURNER EMISSIONS - Mary's Draw 412-1527H

Burner Rating: 750,000 Btu/hr

Burner Fuel: Natural Gas

Pollutant	Burner Rating	E.F.	Conv.	Usage	Emissions	
	MMBtu/hr	*lb/MMBtu*	*lb/ton*	*hr/yr*	*lb/hr*	*tpy*
VOC	0.75	0.0054	2000	8760	0.0040	0.0177
HAP	0.75	1.77E-03	2000	8760	0.0013	0.0058
NO_X	0.75	0.0980	2000	8760	0.0735	0.3221
CO	0.75	0.0824	2000	8760	0.0618	0.2705

HAP SPECIATED EMISSIONS

HAP	Burner Rating	HAP Emission Factor	Conv.	Usage	Emissions	
	MMBtu/hr	*lb/MMBtu*	*lb/ton*	*hr/yr*	*lbs/hr*	*tpy*
Benzene	0.75	2.06E-06	2000	8760	1.54E-06	6.76E-06
Toluene	0.75	3.33E-06	2000	8760	2.50E-06	1.10E-05
Ethylbenzene	0.75	0.00	2000	8760	0.00	0.00
Xylenes	0.75	0.00	2000	8760	0.00	0.00
2,2,4-Trimethylpentane	0.75	0.00	2000	8760	0.00	0.00
n-hexane	0.75	1.76E-03	2000	8760	1.32E-03	5.80E-03

NOx, CO & VOC Emission Factors are based on AP-42 Table 1.4-1 and 1.4-2

Emission factors were calculated using AP-42 Emissions for Natural Gas Combustion (Tables 1.4-1 and 1.4-2).

Natural gas heat content 1,020 Btu/scf

Propane Heat Content 91.5×10^6 Btu/1000 gallons

Sample Calculations- Benzene from Treater Burner

Benzene Emissions 750000 (Btu/hr) x 8760 hrs/year x 0.00000206 lbs/MMBtu x 1/ 1000000 (MMBtu/Btu) (1/2000) (tons/lb) 6.76E-06

TABLE 8
LINE HEATER BURNER EMISSIONS - Mary's Draw 412-1527H

Burner Rating: 375,000 Btu/hr
Burner Fuel: Natural Gas

Pollutant	Burner Rating	E.F.	Conv.	Usage	Emissions	
	MMBtu/hr	*lb/MMBtu*	*lb/ton*	*hr/yr*	*lb/hr*	*tpy*
VOC	0.375	0.0054	2000	8760	0.0020	0.0089
HAP	0.375	1.77E-03	2000	8760	0.0007	0.0029
NO_X	0.375	0.0980	2000	8760	0.0368	0.1610
CO	0.375	0.0824	2000	8760	0.0309	0.1353

HAP SPECIATED EMISSIONS

HAP	Burner Rating	HAP Emission Factor	Conv.	Usage	Emissions	
	MMBtu/hr	*lb/MMBtu*	*lb/ton*	*hr/yr*	*lbs/hr*	*tpy*
Benzene	0.375	2.06E-06	2000	8760	7.72E-07	3.38E-06
Toluene	0.375	3.33E-06	2000	8760	1.25E-06	5.48E-06
Ethylbenzene	0.375	0.00	2000	8760	0.00	0.00
Xylenes	0.375	0.00	2000	8760	0.00	0.00
2,2,4-Trimethylpentane	0.375	0.00	2000	8760	0.00	0.00
n-hexane	0.375	1.76E-03	2000	8760	6.62E-04	2.90E-03

NOx, CO & VOC Emission Factors are based on AP-42 Table 1.4-1 and 1.4-2
Emission factors were calculated using AP-42 Emissions for Natural Gas Combustion (Tables 1.4-1 and 1.4-2).
Natural gas heat content 1,020 Btu/scf
Propane Heat Content 91.5×10^6 Btu/1000 gallons

Sample Calculations- Benzene from Treater Burner

Benzene Emissions 375000 (Btu/hr) x 8760 hrs/year x 0.00000206 lbs/MMBtu x 1/ 1000000 (MMBtu/Btu) (1/2000) (tons/lb) 3.38E-06

TABLE 9
TRUCK LOADING EMISSIONS - Mary's Draw 412-1527H

Formula: $L_L = 12.46 \frac{SPM}{T}$ — AP-42, Chap. 5-2, Eq. 1: Loading Loss (lb/10^3 gallon of liquid loaded)

Where:			
	S =	0.6	Submerged loading: dedicated normal service *Source AP-42, Table 5.2-1*
	P =	0.00	True vapor pressure of liquid loaded
	M =	45.50	Molecular weight of tank vapors (lb/lb-mol)
	T =	505.50	Temperature of bulk liquid loaded (°R = °F+460)
	L_L =	0.00	lb/10^3 gallons of Loading loss

Truck Loading Emissions

Pollutant	Truck load rate	Annual Production	Load Time	Conversion Factor	Uncontrolled Emission Rates		Controlled Emission Rates	
	bbl/hr	*bbl/yr*	*hrs*	*gal/bbl*	*lbs/hr*	*tpy*	*lbs/hr*	*tpy*
VOC (C3+)	200.0	378,870.0	1.00	42	0.00	0.00	0.00	0.00

HAP Speciated Emissions

HAP	HAP Weight %	Uncontrolled Emission Rates		Controlled Emission Rates	
	%	*lb/hr*	*tpy*	*lb/hr*	*tpy*
Benzene	0.01	0.00E+00	0.00E+00	0.00E+00	0.00E+00
Toluene	0.00	0.00E+00	0.00E+00	0.00E+00	0.00E+00
Ethylbenzene	0.00	0.00E+00	0.00E+00	0.00E+00	0.00E+00
Xylenes	0.00	0.00E+00	0.00E+00	0.00E+00	0.00E+00
2,2,4-Trimethylpentane	0.06	0.00E+00	0.00E+00	0.00E+00	0.00E+00
n-Hexane	0.23	0.00E+00	0.00E+00	0.00E+00	0.00E+00
Total HAPs	0.30	0.00	0.00	0.00	0.00

(EPA AP-42 Values) Table 1 below is required to supply the saturation factor variable in the above equation.

Cargo Carrier	Mode of Operation	S Factor
Tank Trucks and Rail Tank Cars	Submerged loading of a clean cargo tank	0.50
	Submerged loading: dedicated normal service	0.60
	Submerged loading: dedicated vapor balance service	1.00

(EPA AP-42 Values) Table 2 below may be used to provide the vapor pressure and molecular weight values for the above equation.

Petroleum Liquid	Vapor MW at 60F Mv(lb/lb-mole)	Condensed Vapor Density at 60F Wvc(lb/gal	Liquid Density at 60F W1(lb/gal)	True Vapor Pressure, Pva (psi) at various temperatures in F						
				40	50	60	70	80	90	100
Crude Oil RVP 5	50	4.5	7.1	1.8	2.3	2.8	3.4	4	4.8	5.7

Sample Calculations- Benzene from Truck Loading Emissions

Benzene Emissions: 0.01 (% Wt Benzene) x 0.00 (TPY VOC) = 0.00E+00 (TPY)

Note: Truck loading vapors are controlled with 70% capture efficiency and routed to the flare.

TABLE 10
FUGITIVE EMISSIONS - Mary's Draw 412-1527H

Fugitive Components	Stream Type	Number of Components (provided by EOG)	EPA Average Total Hydrocarbon Emission Factors [a] (lb/hr/source)	Fugitive VOC Emission Rates [a] (lbs/hour)	Fugitive VOC Emission Rates [a] (tons/year)	VOC EMISSIONS: Total Gas (tons/year)	VOC EMISSIONS: Total Heavy Oil (tons/year)	VOC EMISSIONS: Total Light Oil (tons/year)	VOC EMISSIONS: Total Water/ Light Oil (tons/year)
Connectors	Gas	395	4.58E-04	0.05	0.23	0.23			
	Heavy Oil	0	1.67E-05	0.00	0.00		0.00		
	Light Oil	277	4.58E-04	0.13	0.56			0.56	
	Water/Oil	51	2.42E-04	0.01	0.05				0.05
Valves	Gas	64	1.00E-02	0.19	0.82	0.82			
	Heavy Oil	0	1.83E-05	0.00	0.00		0.00		
	Light Oil	50	5.42E-03	0.27	1.19			1.19	
	Water/Oil	24	2.17E-04	0.01	0.02				0.02
Pumps	Gas	0	5.42E-03	0.00	0.00	0.00			
	Light Oil	1	2.88E-02	0.00	0.00	0.00	0.00	0.00	
	Water/Oil	0	5.42E-05	0.00	0.00				0.00
Flanges	Gas	9	8.75E-04	0.00	0.01	0.01			
	Heavy Oil	0	8.75E-07	0.00	0.00		0.00		
	Light Oil	8	2.42E-04	0.00	0.01			0.01	
	Water/Oil	4	6.25E-06	0.00	0.00				0.00
Open Ended Lines	Gas	7	4.58E-03	0.01	0.04	0.04			
	Heavy Oil	0	3.08E-04	0.00	0.00		0.00		
	Light Oil	3	3.08E-03	0.01	0.04			0.04	
	Water/Oil	5	5.42E-04	0.00	0.01				0.01
Others	Gas	32	1.96E-02	0.18	0.81	0.81			
	Heavy Oil	0	7.08E-05	0.00	0.00		0.00		
	Light Oil	4	1.67E-02	0.07	0.29			0.29	
	Water/Oil	6	3.08E-02	0.19	0.81				0.81
			Total Fugitive Emission Rates	**1.12**	**4.90**	**1.92**	**0.00**	**2.09**	**0.90**

Speciated HAP Weight Fraction

	Tank Vapor composition [b]				Heavy oil composition [b]				light oil and water/oil composition [b]			
Component	*mol%*	*MW of component*	*MW of W&S Stream*	*wt. fraction*	*mol%*	*MW of component*	*MW of Heavy Oil Stream*	*wt. fraction*	*mol%*	*MW of component*	*MW of LP Oil*	*wt. fraction*
	%	lb/lb-mol	lb/lb-mol		%	lb/lb-mol	lb/lb-mol		%	lb/lb-mol	lb/lb-mol	
Benzene	-	78.11	-	4.84E-06	-	78.11	-	1.05E-03	-	78.11	-	1.05E-03
Toluene	-	92.13	-	3.93E-03	-	92.13	-	3.14E-03	-	92.13	-	3.14E-03
Ethylbenzene	-	106.17	-	1.93E-04	-	106.17	-	6.25E-03	-	106.17	-	6.25E-03
Xylenes	-	106.17	-	5.05E-04	-	106.17	-	7.35E-03	-	106.17	-	7.35E-03
n-hexane	-	86.18	-	1.71E-03	-	86.18	-	3.26E-02	-	86.18	-	3.26E-02
2,2,4-trimethylpentane	-	114.24	-	1.04E-03	-	114.24	-	2.43E-02	-	114.24	-	2.43E-02

TABLE 10

Fugitive HAP Emissions

	Fugitive VOC Emission Rates (tons/yr)	Speciated Fugitive HAP (weight fraction) [b]						Speciated Fugitive Emissions						
		Benzene	Toluene	Ethyl-Benzene	Xylenes	n-hexane	2,2,4 TMP	Benzene (tons/yr)	Toluene (tons/yr)	Ethyl-Benzene (tons/yr)	Xylenes (tons/yr)	n-hexane (tons/yr)	2,2,4 TMP (tons/yr)	Total HAP (tons/yr)
Gas	1.92	4.84E-06	3.93E-03	1.93E-04	5.05E-04	1.71E-03	1.04E-03	0.0000	0.0075	0.0004	0.0010	0.0033	0.0020	
Heavy Oil	0.00	1.05E-03	3.14E-03	6.25E-03	7.35E-03	3.26E-02	2.43E-02	0.0000	0.0000	0.0000	0.0000	0.0000	0.0000	
Light Oil	2.09	1.05E-03	3.14E-03	6.25E-03	7.35E-03	3.26E-02	2.43E-02	0.0022	0.0065	0.0130	0.0153	0.0680	0.0506	
Water/Light Oil	0.90	1.05E-03	3.14E-03	6.25E-03	7.35E-03	3.26E-02	2.43E-02	0.0009	0.0028	0.0056	0.0066	0.0293	0.0218	
Total	**4.90**							**0.0031**	**0.017**	**0.0190**	**0.0229**	**0.1006**	**0.0744**	**0.2370**

Notes:

[a] EPA Protocol for Equipment Leak Emission Estimates, November 1995, Table 2-4, Pages 2-15.

[b] HAP weight fractionsfor Tank Vapors obtained from Promaxs. HAP weight for Heavy Oil and Light Oil obtained from Liquid Analysis

Sample Calculations- Fugitive VOC and HAP (Benene) Emissions from Gas

VOC Emissions (connectors) 395 (# of components) x 0.000458 lbs/hr/source x 29.38% NMVOC from Summary -Extended Gas Analysis = 0.05 lbs/hr

Benzene Emissions (Gas) 1.92 tons/year AggregateFugitive VOC Emissions from Gas x 0.0000048 Fugitive Emission Factor = 0.0000 tons/year

TABLE 11
GREENHOUSE GAS EMISSIONS - Mary's Draw 412-1527H

Flare CO_2 and CH_4 Emissions

Components	Mole fraction of treater gas constituents[a]	Volume of treater gas sent to flare *scf/year*	Mole fraction of tank vapor constituents[b]	Volume of flash gas *scf/year*	Volume of W/B sent to Flare *scf/year*	Component volume of gas sent to Flare *scf/year*	Component volume of gas for destruction *scf/year*	Number of carbon atoms	Flare Efficiency	Flared CO_2 Volume[c] *scf/year*	Unflared CO_2 and CH_4 Volume[c] *scf/year*	Volume GHGs Emitted *scf/year*
CO_2	0.006	79,418,184	0.028	27,009,518	224,419	759,562	1,264,243	1	0	--	1,264,243	241,277,210
Methane	0.479	79,418,184	0.041	27,009,518	224,419	1,103,772	39,170,222	1	0.98	38,386,817	783,404	783,404
Ethane	0.195	79,418,184	0.144	27,009,518	224,419	3,920,215	19,415,150	2	0.98	38,053,694	--	
Propane	0.152	79,418,184	0.351	27,009,518	224,419	9,563,550	21,627,959	3	0.98	63,586,201	--	
i-Butane	0.018	79,418,184	0.080	27,009,518	224,419	2,171,461	3,636,539	4	0.98	14,255,232	--	
n-Butane	0.056	79,418,184	0.177	27,009,518	224,419	4,811,114	9,289,260	4	0.98	36,413,900	--	
Pentane	0.027	79,418,184	0.114	27,009,518	224,419	3,092,580	5,202,562	5	0.98	25,492,555	--	
Hexane	0.010	79,418,184	0.002	27,009,518	224,419	46,623	853,901	6	0.98	5,020,939	--	
Benzene	0.001	79,418,184	0.000	27,009,518	224,419	132	51,292	6	0.98	301,594	--	
Heptanes	0.008	79,418,184	0.034	27,009,518	224,419	917,377	1,588,143	7	0.98	10,894,660	--	
Toluene	0.000	79,418,184	0.004	27,009,518	224,419	107,123	130,941	7	0.98	898,255	--	
Octane plus	0.001	79,418,184	0.026	27,009,518	224,419	718,921	827,413	8	0.98	6,486,921	--	
Ethyl benzene	0.000	79,418,184	0.000	27,009,518	224,419	5,243	7,633	8	0.98	59,839	--	
Xylenes	0.000	79,418,184	0.001	27,009,518	224,419	13,764	20,709	8	0.98	162,361	--	
Subtotal										**240,012,967**	--	

Flare CO_2 and CH_4 Emissions

Pollutant	Volume Emitted *scf/year*	Density of GHG[d] *lb/scf*	Operating Time *hrs/yr*	Conversion Factor *lb/ton*	Emissions[d] *lbs/hr*	Emissions[d] *(tons/yr)*	GWF	**CO_2e Emissions** *MT/yr*
CO_2	241,277,210	0.12	8760	2000	3193.98	13,989.62	1	12691.10
CH_4	783,404	0.09	8760	2000	8.32	36.44	21	694.25
Subtotal								13385.35

Flare N_2O Emissions

N_2O Source	Volume of gas combusted No Gas Pipeline[1] *scf/year*	HHV *Btu/scf*	Emission Factor *lbs/MMBtu*	Operating Time *hrs/yr*	Conversion Factor *lb/ton*	Emissions[e] *lbs/hr*	Emissions[e] *tons/yr*	GWF	**CO_2e Emissions** *MT/yr*
Flare	79,418,184	1,354.4	2.20E-04	8760	2000	2.71E-03	1.19E-02	310	3.33
Subtotal									3.33

TABLE 11
GREENHOUSE GAS EMISSIONS - Mary's Draw 412-1527H

Heater Treater, Line Heater, and Pilot Emissions

Emission Source	Firing Rate MMBtu/hr	Operating Time hrs/yr	Fuel Type	CO_2 Emissions Emission Factor[f] kg/MMBtu	GWF	Emissions MT/yr	CH_4 Emissions Emission Factor[f] kg/MMBtu	GWF	Emissions MT/yr	N_2O Emissions Emission Factor[f] kg/MMBtu	GWF	Emissions MT/yr	CO_{2e} Emissions (MT/yr)
Line Heater	0.375	8760	Natural Gas	53.06	1	174.30	0.001	25	0.003	0.0001	298	0.0008	174.48
Heater Treater	0.75	8760	Natural Gas	53.06	1	348.60	0.001	25	0.007	0.0001	298	0.0007	348.96
Pilot Gas[g]	0.01	8760	Natural Gas	53.06	1	5.29	0.001	25	0.000	0.0001	298	0.0000	5.29
Subtotal													**528.74**

GHG Emissions Summary

Emission Sources	CO_2e emissions
Flare (MT/yr)	13,388.68
Heater Treater, Line Heater, andPilot (MT/yr)	528.74
Total Emissions (MT/yr)	13,917.42

Notes
a Mole Fraction from laboratory reports for Treater Gas
b Mole fraction from promax for Oil tanks
c 40 CFR 98.233 (n)(4): Eqns: W-19, W-20 and W-21
d 40 CFR 98.233(v) Eqn W-36 - density at 60F and 14.7 psia
e 40 CFR 98.233(z)(6) Eqn W-40
f 40 CFR 98.37 Table C-1
g MMBtu/hr based on fuel consumption and heating value of treater gas

Sample Calculations
Methane Volume for Destruction

(79,418,184 (scf/year-Volume of Treater Gas sent to flare) x 0.48 (mole fraction of methane in treater gas)) + (0.04 (mole fraction of methane in tank vapor) x 27,009,518 scf/year- Volume of flash sent to flare)) + (0.04 (methane mole fraction in tank vapors) x 224,419 scf/year- volume of flash sent to flare)) — 39,170,222 scf/year

Methane Combusted Volume

39,170,222 (scf/year- methane volume for destruction) x 1 (# of carbon atoms in methane) x0.98 (default fraction of methane combsted) — 38,386,817 scf/year

Methane Uncombusted Volume

39,170,222 scf/year- total volume of gas for destruction x(1-0.98)default fraction of gas combusted — 783,404 scf/year
783,404 (scf/year- Uncombusted Volume) x 0.093034964(lbs/scf- methane density)/ 8760 hrs/year - operating time — 8.32 lbs/hr
8.32 (lbs/hr) x 8760 (hrs/year) x 21 (global warming potential for methane) x 0.9072 (MT/ton) x / 2000 (lb/ton) — 694.26 MT/year

TABLE 12
PLANNED MSS EMISSIONS - Mary's Draw 412-1527H

Number of events per year	3
Duration of each event (hrs)	0.5
Venting Volumetric Flow Rate (scf/hr)	1000

	Hourly Emissions (lb/hr)	*Annual Emissions (tpy)*
VOC	2.85E+01	2.14E-02
Benzene	3.59E-02	2.69E-05
Toluene	5.40E-02	4.05E-05
Ethylbenzene	9.50E-03	7.12E-06
Xylenes	2.99E-02	2.24E-05
2,2,4-Trimethylpentane	8.80E-02	6.60E-05
n-Hexane	1.47E+00	1.10E-03

Bryan Research & Engineering, Inc.

ProMax® 3.2

with

TSWEET® & PROSIM®

Copyright © BRE Group, Ltd. 2002-2012. All Rights Reserved.

Simulation Report

Project: 1 - Vertical Battery with 2-Phase.pmx

Licensed to Conestoga-Rovers & Associates, Inc. and Affiliates

Client Name: EOG Wyoming
Location: Converse County, Wyoming
Job: Mary's Draw 412-1527H

ProMax Filename: I:\Projects\EOG Wyoming\1 - Vertical Battery with 2-Phase.pmx
ProMax Version: 3.2.12198.0
Simulation Initiated: 12/19/2014 12:11:25 PM

Bryan Research & Engineering, Inc.
Chemical Engineering Consultants
P.O. Box 4747 Bryan, Texas 77805
Office: (979) 776-5220
FAX: (979) 776-4818
mailto:sales@bre.com
http://www.bre.com/

Report Navigator can be activated via the ProMax Navigator Toolbar.
An asterisk (*), throughout the report, denotes a user specified value.
A question mark (?) after a value, throughout the report, denotes an extrapolated or approximate value.

Properties	HT Gas to Sales	
Temperature(Total)	143	°F
Pressure(Total)	80*	psia

Properties	Gas from VRT	
Temperature(Total)	134.9	°F
Pressure(Total)	14.7	psia

Names	Units	Oil to Sales	Water to Disposal
Std Liquid Volumetric Flow	bbl/d	1037.8	816.69
True Vapor Pressure	psia	9.8929	17.242
Reid Vapor Pressure	psi	5.712	1.0467
API Gravity		64.417	10.012

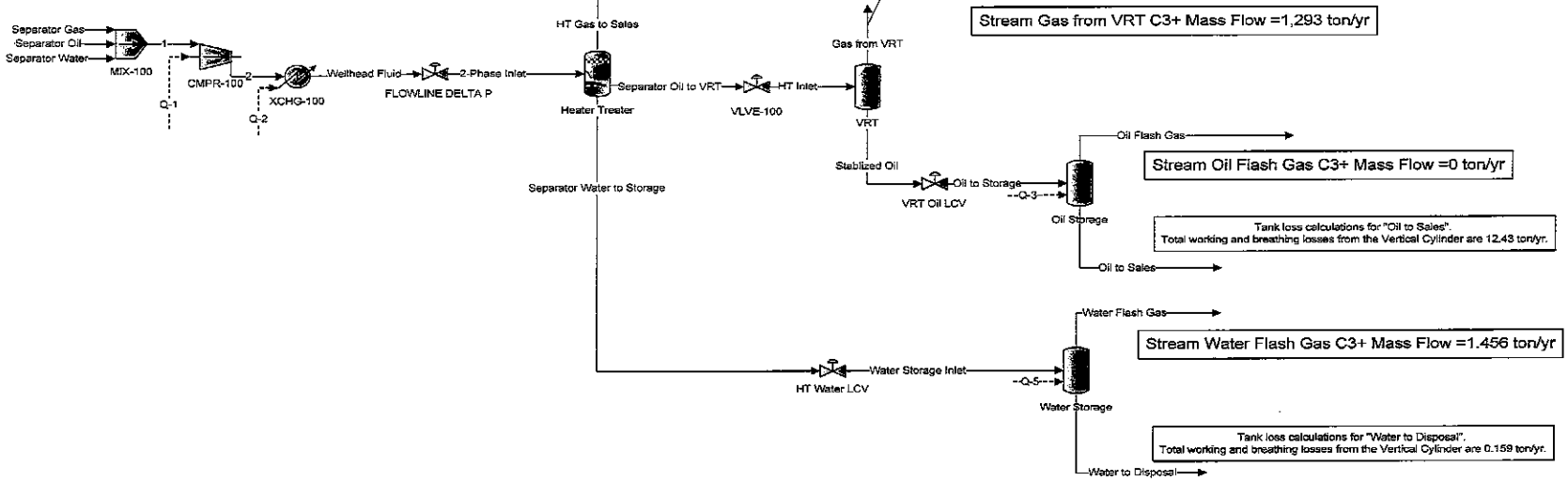

Process Streams		Gas from VRT	HT Gas to Sales	HT Inlet	Oil Flash Gas	Oil to Sales
Composition	Status:	Solved	Solved	Solved	Solved	Solved
Phase: Total	From Block:	VRT	Heater Treater	VLVE-100	Oil Storage	Oil Storage
	To Block:	--	--	VRT	--	--
Mole Fraction		%	%	%	%	%
Water		2.63063	3.96150	0.213315		0.0275965
H2S		0	0	0		0
Oxygen		0	0	0		0
CO2		1.88992	2.92558	0.152763		0.0192992
Nitrogen		0.0895534	0.866459	0.00650250		0.000121820
Methane		17.6734	60.8021	1.32845		0.0726932
Ethane		10.8511	9.75351	0.975154		0.216403
Propane		25.4972	10.5755	3.43190		1.73666
Isobutane		6.30136	1.96497	1.25606		0.868438
n-Butane		15.3103	4.37643	3.74247		2.85373
Isopentane		5.43736	1.35031	2.48497		2.25814
n-Pentane		5.15087	1.24882	2.87994		2.70547
Hexane		3.72852	0.862865	5.30214		5.42304
Heptane		1.35812	0.317795	4.84846		5.11661
Octane		0.140610	0.0338459	1.31626		1.40658
Nonane		2.62243	0.652008	64.5116		69.2665
Decane		0.00111777	0.000290229	0.0693122		0.0745514
Benzene		0.687436	0.157799	1.06033		1.08898
Toluene		0.0365151	0.00847402	0.161375		0.170968
Ethylbenzene		0.104441	0.0249516	1.13680		1.21611
m-Xylene		0.377641	0.0907955	4.73642		5.07130
2,2,4-Trimethylpentane		0.111558	0.0259605	0.385741		0.406806
Molar Flow		lbmol/h	lbmol/h	lbmol/h	lbmol/h	lbmol/h
Water		0.190581	1.11343	0.216603	0	0.0260226
H2S		0	0	0	0	0
Oxygen		0	0	0	0	0
CO2		0.136919	0.822270	0.155117	0	0.0181986
Nitrogen		0.00648786	0.243529	0.00660273	0	0.000114872
Methane		1.28038	17.0892	1.34893	0	0.0685474
Ethane		0.786125	2.74135	0.990186	0	0.204061
Propane		1.84719	2.97239	3.48481	0	1.63762
Isobutane		0.456514	0.552278	1.27542	0	0.818909
n-Butane		1.10918	1.23005	3.80016	0	2.69098
Isopentane		0.393919	0.379521	2.52328	0	2.12936
n-Pentane		0.373164	0.350998	2.92433	0	2.55117
Hexane		0.270120	0.242519	5.38387	0	5.11375
Heptane		0.0983915	0.0893203	4.92320	0	4.82480
Octane		0.0101868	0.00951282	1.33655	0	1.32636
Nonane		0.189987	0.183255	65.5061	0	65.3161
Decane		8.09792E-05	8.15724E-05	0.0703806	0	0.0702996
Benzene		0.0498025	0.0443515	1.07667	0	1.02687
Toluene		0.00264540	0.00238173	0.163863	0	0.161218
Ethylbenzene		0.00756641	0.00701297	1.15432	0	1.14676
m-Xylene		0.0273589	0.0255192	4.80943	0	4.78207
2,2,4-Trimethylpentane		0.00808203	0.00729652	0.391687	0	0.383605

Process Streams		Oil to Storage	Separator Gas	Separator Oil	Separator Oil to VRT	Separator Water
Composition	Status:	Solved	Solved	Solved	Solved	Solved
Phase: Total	From Block:	VRT Oil LCV	--	--	Heater Treater	--
	To Block:	Oil Storage	MIX-100	MIX-100	VLVE-100	MIX-100
Mole Fraction		%	%	%	%	%
Water		0.0275965	0*	0*	0.213315	100*
H2S		0	0*	0*	0	0*
Oxygen		0	0*	0*	0	0*
CO2		0.0192992	1.37357*	0.635345*	0.152763	0*
Nitrogen		0.000121820	0.867747*	0.0270444*	0.00650250	0*
Methane		0.0726932	66.6036*	1.35222*	1.32845	0*
Ethane		0.216403	11.1057*	0.864726*	0.975154	0*
Propane		1.73666	11.1934*	3.49440*	3.43190	0*
Isobutane		0.868438	1.61499*	1.37589*	1.25606	0*
n-Butane		2.85373	3.96801*	3.90673*	3.74247	0*
Isopentane		2.25814	0.969452*	2.58334*	2.48497	0*
n-Pentane		2.70547	1.03426*	2.92975*	2.87994	0*
Hexane		5.42304	0.385121*	5.37966*	5.30214	0*
Heptane		5.11661	0.0723039*	4.86024*	4.84846	0*
Octane		1.40658	0.00220012*	1.30947*	1.31626	0*
Nonane		69.2665	0.00360019*	63.9294*	64.5116	0*
Decane		0.0745514	0.0174009*	0.0642305*	0.0693122	0*
Benzene		1.08898	0.0222012*	1.09063*	1.06033	0*
Toluene		0.170968	0.00340018*	0.161173*	0.161375	0*
Ethylbenzene		1.21611	0.0107006*	1.12801*	1.13680	0*
m-Xylene		5.07130	0.723139*	4.52676*	4.73642	0*
2,2,4-Trimethylpentane		0.406806	0.0292016*	0.381008*	0.385741	0*
Molar Flow		lbmol/h	lbmol/h	lbmol/h	lbmol/h	lbmol/h
Water		0.0260226	0*	0*	0.216603	662.587*
H2S		0	0*	0*	0	0*
Oxygen		0	0*	0*	0	0*
CO2		0.0181986	0.352394*	0.652828*	0.155117	0*
Nitrogen		0.000114872	0.222623*	0.0277886*	0.00660273	0*
Methane		0.0685474	17.0873*	1.38943*	1.34893	0*
Ethane		0.204061	2.84920*	0.888520*	0.990186	0*
Propane		1.63762	2.87170*	3.59055*	3.48481	0*
Isobutane		0.818909	0.414330*	1.41375*	1.27542	0*
n-Butane		2.69098	1.01801*	4.01423*	3.80016	0*
Isopentane		2.12936	0.248716*	2.65442*	2.52328	0*
n-Pentane		2.55117	0.265341*	3.01036*	2.92433	0*
Hexane		5.11375	0.0988038*	5.52768*	5.38387	0*
Heptane		4.82480	0.0185498*	4.99398*	4.92320	0*
Octane		1.32636	0.000564447*	1.34550*	1.33655	0*
Nonane		65.3161	0.000923640*	65.6885*	65.5061	0*
Decane		0.0702996	0.00446426*	0.0659979*	0.0703806	0*
Benzene		1.02687	0.00569578*	1.12064*	1.07667	0*
Toluene		0.161218	0.000872327*	0.165608*	0.163863	0*
Ethylbenzene		1.14676	0.00274526*	1.15905*	1.15432	0*
m-Xylene		4.78207	0.185523*	4.65132*	4.80943	0*
2,2,4-Trimethylpentane		0.383605	0.00749175*	0.391492*	0.391687	0*

Process Streams		Separator Water to Storage	Stablized Oil	Water Flash Gas	Water Storage Inlet
Composition	Status:	Solved	Solved	Solved	Solved
Phase: Total	From Block:	Heater Treater	VRT	Water Storage	HT Water LCV
	To Block:	HT Water LCV	VRT Oil LCV	--	Water Storage
Mole Fraction		%	%	%	%
Water		99.9865	0.0275965	2.70535	99.9865
H2S		0	0	0	0
Oxygen		0	0	0	0
CO2		0.00420884	0.0192992	7.83663	0.00420884
Nitrogen		4.23003E-05	0.000121820	0.540340	4.23003E-05
Methane		0.00584522	0.0726932	65.0274	0.00584522
Ethane		0.000935498	0.216403	9.94368	0.000935498
Propane		0.000764722	1.73666	7.78196	0.000764722
Isobutane		5.64859E-05	0.868438	0.725056	5.64859E-05
n-Butane		0.000306026	2.85373	3.38712	0.000306026
Isopentane		5.18527E-05	2.25814	0.620838	5.18527E-05
n-Pentane		5.67567E-05	2.70547	0.683671	5.67567E-05
Hexane		1.50832E-05	5.42304	0.205952	1.50832E-05
Heptane		2.11825E-06	5.11661	0.0282964	2.11825E-06
Octane		3.34470E-07	1.40658	0.00465721	3.34470E-07
Nonane		8.46955E-06	69.2665	0.113459	8.46955E-06
Decane		1.99813E-09	0.0745514	2.78441E-05	1.99813E-09
Benzene		0.000802515	1.08898	0.244660	0.000802515
Toluene		3.55911E-05	0.170968	0.0130748	3.55911E-05
Ethylbenzene		6.93504E-05	1.21611	0.0270930	6.93504E-05
m-Xylene		0.000286539	5.07130	0.109402	0.000286539
2,2,4-Trimethylpentane		9.36691E-08	0.406806	0.00137541	9.36691E-08
Molar Flow		lbmol/h	lbmol/h	lbmol/h	lbmol/h
Water		661.257	0.0260226	0.00120388	661.257
H2S		0	0	0	0
Oxygen		0	0	0	0
CO2		0.0278350	0.0181986	0.00348730	0.0278350
Nitrogen		0.000279751	0.000114872	0.000240451	0.000279751
Methane		0.0386571	0.0685474	0.0289372	0.0386571
Ethane		0.00618688	0.204061	0.00442494	0.00618688
Propane		0.00505745	1.63762	0.00346298	0.00505745
Isobutane		0.000373567	0.818909	0.000322650	0.000373567
n-Butane		0.00202389	2.69098	0.00150727	0.00202389
Isopentane		0.000342925	2.12936	0.000276273	0.000342925
n-Pentane		0.000375358	2.55117	0.000304234	0.000375358
Hexane		9.97523E-05	5.11375	9.16488E-05	9.97523E-05
Heptane		1.40090E-05	4.82480	1.25919E-05	1.40090E-05
Octane		2.21200E-06	1.32636	2.07246E-06	2.21200E-06
Nonane		5.60130E-05	65.3161	5.04892E-05	5.60130E-05
Decane		1.32146E-08	0.0702996	1.23906E-08	1.32146E-08
Benzene		0.00530740	1.02687	0.000108874	0.00530740
Toluene		0.000235381	0.161218	5.81829E-06	0.000235381
Ethylbenzene		0.000458646	1.14676	1.20564E-05	0.000458646
m-Xylene		0.00189501	4.78207	4.86840E-05	0.00189501
2,2,4-Trimethylpentane		6.19477E-07	0.383605	6.12060E-07	6.19477E-07

Process Streams		Water to Disposal	Wellhead Fluid	1	2	2-Phase Inlet
Composition	Status:	Solved	Solved	Solved	Solved	Solved
Phase: Total	From Block:	Water Storage	XCHG-100	MIX-100	CMPR-100	FLOWLINE DELTA P
	To Block:	--	FLOWLINE DELTA P	CMPR-100	XCHG-100	Heater Treater
Mole Fraction		%	%	%	%	%
Water		99.9931	83.7664	83.7664	83.7664	83.7664
H2S		0	0	0	0	0
Oxygen		0	0	0	0	0
CO2		0.00368178	0.127083	0.127083	0.127083	0.127083
Nitrogen		5.94284E-06	0.0316578	0.0316578	0.0316578	0.0316578
Methane		0.00146982	2.33589	2.33589	2.33589	2.33589
Ethane		0.000266435	0.472535	0.472535	0.472535	0.472535
Propane		0.000241112	0.816979	0.816979	0.816979	0.816979
Isobutane		7.69952E-06	0.231111	0.231111	0.231111	0.231111
n-Butane		7.81223E-05	0.636191	0.636191	0.636191	0.636191
Isopentane		1.00790E-05	0.367024	0.367024	0.367024	0.367024
n-Pentane		1.07552E-05	0.414125	0.414125	0.414125	0.414125
Hexane		1.22538E-06	0.711319	0.711319	0.711319	0.711319
Heptane		2.14286E-07	0.633700	0.633700	0.633700	0.633700
Octane		2.11015E-08	0.170174	0.170174	0.170174	0.170174
Nonane		8.35293E-07	8.30467	8.30467	8.30467	8.30467
Decane		1.24589E-10	0.00890806	0.00890806	0.00890806	0.00890806
Benzene		0.000786105	0.142395	0.142395	0.142395	0.142395
Toluene		3.47137E-05	0.0210470	0.0210470	0.0210470	0.0210470
Ethylbenzene		6.75319E-05	0.146878	0.146878	0.146878	0.146878
m-Xylene		0.000279196	0.611490	0.611490	0.611490	0.611490
2,2,4-Trimethylpentane		1.12151E-09	0.0504409	0.0504409	0.0504409	0.0504409
Molar Flow		lbmol/h	lbmol/h	lbmol/h	lbmol/h	lbmol/h
Water		661.256	662.587	662.587	662.587	662.587
H2S		0	0	0	0	0
Oxygen		0	0	0	0	0
CO2		0.0243477	1.00522	1.00522	1.00522	1.00522
Nitrogen		3.93001E-05	0.250412	0.250412	0.250412	0.250412
Methane		0.00971994	18.4768	18.4768	18.4768	18.4768
Ethane		0.00176194	3.73772	3.73772	3.73772	3.73772
Propane		0.00159448	6.46225	6.46225	6.46225	6.46225
Isobutane		5.09170E-05	1.82807	1.82807	1.82807	1.82807
n-Butane		0.000516624	5.03223	5.03223	5.03223	5.03223
Isopentane		6.66523E-05	2.90314	2.90314	2.90314	2.90314
n-Pentane		7.11244E-05	3.27571	3.27571	3.27571	3.27571
Hexane		8.10345E-06	5.62649	5.62649	5.62649	5.62649
Heptane		1.41708E-06	5.01253	5.01253	5.01253	5.01253
Octane		1.39545E-07	1.34606	1.34606	1.34606	1.34606
Nonane		5.52381E-06	65.6894	65.6894	65.6894	65.6894
Decane		8.23912E-10	0.0704622	0.0704622	0.0704622	0.0704622
Benzene		0.00519853	1.12633	1.12633	1.12633	1.12633
Toluene		0.000229562	0.166480	0.166480	0.166480	0.166480
Ethylbenzene		0.000446589	1.16180	1.16180	1.16180	1.16180
m-Xylene		0.00184633	4.83685	4.83685	4.83685	4.83685
2,2,4-Trimethylpentane		7.41659E-09	0.398984	0.398984	0.398984	0.398984

Process Streams	Gas from VRT	HT Gas to Sales	HT Inlet	Oil Flash Gas	Oil to Sales
Mass Fraction	%	%	%	%	%
Water	0.983599	2.60692	0.0348328		0.00431938
H2S	0	0	0		0
Oxygen	0	0	0		0
CO2	1.72627	4.70311	0.0609382		0.00737927
Nitrogen	0.0520673	0.886628	0.00165110		2.96491E-05
Methane	5.88447	35.6301	0.193171		0.0101319
Ethane	6.77187	10.7129	0.265778		0.0565340
Propane	23.3348	17.0344	1.37169		0.665332
Isobutane	7.60140	4.17181	0.661727		0.438539
n-Butane	18.4690	9.29158	1.97163		1.44106
Isopentane	8.14206	3.55868	1.62509		1.41549
n-Pentane	7.71306	3.29123	1.88338		1.69589
Hexane	6.66864	2.71615	4.14152		4.06025
Heptane	2.82443	1.16319	4.40358		4.45437
Octane	0.333357	0.141224	1.36283		1.39594
Nonane	6.98065	3.05461	74.9961		77.1836
Decane	0.00330081	0.00150840	0.0893891		0.0921578
Benzene	1.11446	0.450246	0.750730		0.739031
Toluene	0.0698281	0.0285206	0.134773		0.136862
Ethylbenzene	0.230128	0.0967627	1.09394		1.12172
m-Xylene	0.832104	0.352106	4.55782		4.67765
2,2,4-Trimethylpentane	0.264480	0.108322	0.399389		0.403728
Mass Flow	lb/h	lb/h	lb/h	lb/h	lb/h
Water	3.43337	20.0587	3.90217	0	0.468805
H2S	0	0	0	0	0
Oxygen	0	0	0	0	0
CO2	6.02573	36.1877	6.82664	0	0.800909
Nitrogen	0.181747	6.82208	0.184965	0	0.00321796
Methane	20.5404	274.153	21.6401	0	1.09967
Ethane	23.6380	82.4297	29.7739	0	6.13592
Propane	81.4529	131.069	153.665	0	72.2118
Isobutane	26.5336	32.0996	74.1304	0	47.5968
n-Butane	64.4682	71.4932	220.874	0	156.405
Isopentane	28.4208	27.3820	182.051	0	153.631
n-Pentane	26.9234	25.3241	210.987	0	184.064
Hexane	23.2777	20.8992	463.957	0	440.679
Heptane	9.85902	8.95007	493.314	0	483.455
Octane	1.16362	1.08664	152.672	0	151.508
Nonane	24.3668	23.5034	8401.49	0	8377.12
Decane	0.0115219	0.0116063	10.0139	0	10.0023
Benzene	3.89017	3.46437	84.1010	0	80.2108
Toluene	0.243743	0.219449	15.0981	0	14.8543
Ethylbenzene	0.803288	0.744532	122.549	0	121.746
m-Xylene	2.90456	2.70925	510.593	0	507.689
2,2,4-Trimethylpentane	0.923198	0.833471	44.7418	0	43.8186

Process Streams	Oil to Storage	Separator Gas	Separator Oil	Separator Oil to VRT	Separator Water
Mass Fraction	%	%	%	%	%
Water	0.00431938	0*	0*	0.0348328	100*
H2S	0	0*	0*	0	0*
Oxygen	0	0*	0*	0	0*
CO2	0.00737927	2.34600*	0.254476*	0.0609382	0*
Nitrogen	2.96491E-05	0.943385*	0.00689499*	0.00165110	0*
Methane	0.0101319	41.4666*	0.197428*	0.193171	0*
Ethane	0.0565340	12.9597*	0.236640*	0.265778	0*
Propane	0.665332	19.1552*	1.40235*	1.37169	0*
Isobutane	0.438539	3.64285*	0.727804*	0.661727	0*
n-Butane	1.44106	8.95046*	2.06655*	1.97163	0*
Isopentane	1.41549	2.71447*	1.69629*	1.62509	0*
n-Pentane	1.69589	2.89592*	1.92375*	1.88338	0*
Hexane	4.06025	1.28798*	4.21917*	4.14152	0*
Heptane	4.45437	0.281169*	4.43225*	4.40358	0*
Octane	1.39594	0.00975328*	1.36132*	1.36283	0*
Nonane	77.1836	0.0179197*	74.6216*	74.9961	0*
Decane	0.0921578	0.0960841*	0.0831726*	0.0893891	0*
Benzene	0.739031	0.0673013*	0.775323*	0.750730	0*
Toluene	0.136862	0.0121583*	0.135152*	0.134773	0*
Ethylbenzene	1.12172	0.0440878*	1.08989*	1.09394	0*
m-Xylene	4.67765	2.97943*	4.37380*	4.55782	0*
2,2,4-Trimethylpentane	0.403728	0.129453*	0.396095*	0.399389	0*
Mass Flow	lb/h	lb/h	lb/h	lb/h	lb/h
Water	0.468805	0*	0*	3.90217	11936.7*
H2S	0	0*	0*	0	0*
Oxygen	0	0*	0*	0	0*
CO2	0.800909	15.5087*	28.7306*	6.82664	0*
Nitrogen	0.00321796	6.23642*	0.778453*	0.184965	0*
Methane	1.09967	274.123*	22.2899*	21.6401	0*
Ethane	6.13592	85.6727*	26.7169*	29.7739	0*
Propane	72.2118	126.629*	158.328*	153.665	0*
Isobutane	47.5968	24.0817*	82.1700*	74.1304	0*
n-Butane	156.405	59.1687*	233.316*	220.874	0*
Isopentane	153.631	17.9445*	191.514*	182.051	0*
n-Pentane	184.064	19.1440*	217.194*	210.987	0*
Hexane	440.679	8.51446*	476.350*	463.957	0*
Heptane	483.455	1.85872*	500.406*	493.314	0*
Octane	151.508	0.0644759*	153.694*	152.672	0*
Nonane	8377.12	0.118462*	8424.88*	8401.49	0*
Decane	10.0023	0.635182*	9.39030*	10.0139	0*
Benzene	80.2108	0.444908*	87.5350*	84.1010	0*
Toluene	14.8543	0.0803748*	15.2588*	15.0981	0*
Ethylbenzene	121.746	0.291451*	123.051*	122.549	0*
m-Xylene	507.689	19.6961*	493.808*	510.593	0*
2,2,4-Trimethylpentane	43.8186	0.855771*	44.7196*	44.7418	0*

Process Streams	Separator Water to Storage	Stablized Oil	Water Flash Gas	Water Storage Inlet
Mass Fraction	%	%	%	%
Water	99.9735	0.00431938	1.95117	99.9735
H2S	0	0	0	0
Oxygen	0	0	0	0
CO2	0.0102804	0.00737927	13.8072	0.0102804
Nitrogen	6.57676E-05	2.96491E-05	0.605987	6.57676E-05
Methane	0.00520445	0.0101319	41.7636	0.00520445
Ethane	0.00156122	0.0565340	11.9701	0.00156122
Propane	0.00187155	0.665332	13.7377	0.00187155
Isobutane	0.000182215	0.438539	1.68711	0.000182215
n-Butane	0.000987195	1.44106	7.88138	0.000987195
Isopentane	0.000207636	1.41549	1.79324	0.000207636
n-Pentane	0.000227273	1.69589	1.97472	0.000227273
Hexane	7.21406E-05	4.06025	0.710526	7.21406E-05
Heptane	1.17803E-05	4.45437	0.113511	1.17803E-05
Octane	2.12048E-06	1.39594	0.0212976	2.12048E-06
Nonane	6.02889E-05	77.1836	0.582564	6.02889E-05
Decane	1.57789E-08	0.0921578	0.000158604	1.57789E-08
Benzene	0.00347914	0.739031	0.765086	0.00347914
Toluene	0.000182006	0.136862	0.0482288	0.000182006
Ethylbenzene	0.000408632	1.12172	0.115151	0.000408632
m-Xylene	0.00168837	4.67765	0.464984	0.00168837
2,2,4-Trimethylpentane	5.93845E-07	0.403728	0.00628983	5.93845E-07
Mass Flow	lb/h	lb/h	lb/h	lb/h
Water	11912.7	0.468805	0.0216883	11912.7
H2S	0	0	0	0
Oxygen	0	0	0	0
CO2	1.22500	0.800909	0.153474	1.22500
Nitrogen	0.00783679	0.00321796	0.00673586	0.00783679
Methane	0.620156	1.09967	0.464224	0.620156
Ethane	0.186033	6.13592	0.133054	0.186033
Propane	0.223012	72.2118	0.152702	0.223012
Isobutane	0.0217126	47.5968	0.0187531	0.0217126
n-Butane	0.117633	156.405	0.0876057	0.117633
Isopentane	0.0247417	153.631	0.0199328	0.0247417
n-Pentane	0.0270816	184.064	0.0219501	0.0270816
Hexane	0.00859619	440.679	0.00789787	0.00859619
Heptane	0.00140373	483.455	0.00126173	0.00140373
Octane	0.000252674	151.508	0.000236734	0.000252674
Nonane	0.00718396	8377.12	0.00647550	0.00718396
Decane	1.88019E-06	10.0023	1.76296E-06	1.88019E-06
Benzene	0.414571	80.2108	0.00850433	0.414571
Toluene	0.0216876	14.8543	0.000536088	0.0216876
Ethylbenzene	0.0486921	121.746	0.00127997	0.0486921
m-Xylene	0.201184	507.689	0.00516854	0.201184
2,2,4-Trimethylpentane	7.07619E-05	43.8186	6.99147E-05	7.07619E-05

Process Streams	Water to Disposal	Wellhead Fluid	1	2	2-Phase Inlet
Mass Fraction	%	%	%	%	%
Water	99.9827	49.9696	49.9696	49.9696	49.9696
H2S	0	0	0	0	0
Oxygen	0	0	0	0	0
CO2	0.00899328	0.185196	0.185196	0.185196	0.185196
Nitrogen	9.24004E-06	0.0293658	0.0293658	0.0293658	0.0293658
Methane	0.00130873	1.24085	1.24085	1.24085	1.24085
Ethane	0.000444656	0.470488	0.470488	0.470488	0.470488
Propane	0.000590104	1.19289	1.19289	1.19289	1.19289
Isobutane	2.48382E-05	0.444793	0.444793	0.444793	0.444793
n-Butane	0.000252018	1.22440	1.22440	1.22440	1.22440
Isopentane	4.03607E-05	0.876838	0.876838	0.876838	0.876838
n-Pentane	4.30687E-05	0.989364	0.989364	0.989364	0.989364
Hexane	5.86094E-06	2.02975	2.02975	2.02975	2.02975
Heptane	1.19175E-06	2.10259	2.10259	2.10259	2.10259
Octane	1.33783E-07	0.643669	0.643669	0.643669	0.643669
Nonane	5.94603E-06	35.2689	35.2689	35.2689	35.2689
Decane	9.83884E-10	0.0419689	0.0419689	0.0419689	0.0419689
Benzene	0.00340809	0.368303	0.368303	0.368303	0.368303
Toluene	0.000177523	0.0642134	0.0642134	0.0642134	0.0642134
Ethylbenzene	0.000397928	0.516337	0.516337	0.516337	0.516337
m-Xylene	0.00164515	2.14964	2.14964	2.14964	2.14964
2,2,4-Trimethylpentane	7.11038E-09	0.190789	0.190789	0.190789	0.190789
Mass Flow	lb/h	lb/h	lb/h	lb/h	lb/h
Water	11912.7	11936.7	11936.7	11936.7	11936.7
H2S	0	0	0	0	0
Oxygen	0	0	0	0	0
CO2	1.07153	44.2393	44.2393	44.2393	44.2393
Nitrogen	0.00110093	7.01488	7.01488	7.01488	7.01488
Methane	0.155932	296.413	296.413	296.413	296.413
Ethane	0.0529798	112.390	112.390	112.390	112.390
Propane	0.0703095	284.957	284.957	284.957	284.957
Isobutane	0.00295941	106.252	106.252	106.252	106.252
n-Butane	0.0300273	292.484	292.484	292.484	292.484
Isopentane	0.00480888	209.458	209.458	209.458	209.458
n-Pentane	0.00513154	236.338	236.338	236.338	236.338
Hexane	0.000698318	484.865	484.865	484.865	484.865
Heptane	0.000141994	502.265	502.265	502.265	502.265
Octane	1.59400E-05	153.759	153.759	153.759	153.759
Nonane	0.000708456	8425.00	8425.00	8425.00	8425.00
Decane	1.17228E-07	10.0255	10.0255	10.0255	10.0255
Benzene	0.406066	87.9799	87.9799	87.9799	87.9799
Toluene	0.0211515	15.3392	15.3392	15.3392	15.3392
Ethylbenzene	0.0474122	123.342	123.342	123.342	123.342
m-Xylene	0.196015	513.504	513.504	513.504	513.504
2,2,4-Trimethylpentane	8.47186E-07	45.5754	45.5754	45.5754	45.5754

Process Streams		Gas from VRT	HT Gas to Sales	HT Inlet	Oil Flash Gas	Oil to Sales
Process Streams		Gas from VRT	HT Gas to Sales	HT Inlet	Oil Flash Gas	Oil to Sales
Properties	**Status:**	**Solved**	**Solved**	**Solved**	**Solved**	**Solved**
Phase: **Total**	**From Block:**	**VRT**	**Heater Treater**	**VLVE-100**	**Oil Storage**	**Oil Storage**
	To Block:	--	--	**VRT**	--	--
Property	**Units**					
Temperature	°F	134.882	143	107.375*	69.4*	69.4
Pressure	psia	14.7	80*	1.99851	14.7	14.7
Mole Fraction Vapor	%	100	100	20.3727		0
Mole Fraction Light Liquid	%	0	0	79.6273		100
Mole Fraction Heavy Liquid	%	0	0	0		0
Molecular Weight	lb/lbmol	48.1818	27.3762	110.325		115.099
Mass Density	lb/ft^3	0.112590	0.346440	0.177973		44.7765
Molar Flow	lbmol/h	7.24468	28.1062	101.542	0	94.2968
Mass Flow	lb/h	349.062	769.441	11202.6	0	10853.5
Vapor Volumetric Flow	ft^3/h	3100.30	2221.00	62945.4		242.393
Liquid Volumetric Flow	gpm	386.531	276.903	7847.74		30.2204
Std Vapor Volumetric Flow	MMSCFD	0.0659819	0.255981	0.924802	0	0.858820
Std Liquid Volumetric Flow	sgpm	1.29374	3.65455	31.5639	0	30.2702
Compressibility		0.985934	0.977443	0.203585		0.00665523
Specific Gravity		1.66359	0.945224			0.717928
API Gravity						64.4169
Enthalpy	Btu/h	-368935	-1.20312E+06	-9.54511E+06	0	-9.53811E+06
Mass Enthalpy	Btu/lb	-1056.93	-1563.63	-852.047		-878.805
Mass Cp	Btu/(lb*°F)	0.436659	0.476655	0.497220		0.489484
Ideal Gas CpCv Ratio		1.10488	1.18342	1.04672		1.04748
Dynamic Viscosity	cP	0.00915499	0.0114052			0.573897
Kinematic Viscosity	cSt	5.07620	2.05521			0.800135
Thermal Conductivity	Btu/(h*ft*°F)	0.0128115	0.0181940			0.0744137
Surface Tension	lbf/ft					0.00147837?
Net Ideal Gas Heating Value	Btu/ft^3	2437.34	1354.43	5565.66		5806.01
Net Liquid Heating Value	Btu/lb	19039.3	18654.8	18985.0		18983.3
Gross Ideal Gas Heating Value	Btu/ft^3	2645.63	1485.76	5991.90		6248.99
Gross Liquid Heating Value	Btu/lb	20679.9	20475.3	20451.1		20443.8

Process Streams		Oil to Storage	Separator Gas	Separator Oil	Separator Oil to VRT	Separator Water
Process Streams		**Oil to Storage**	**Separator Gas**	**Separator Oil**	**Separator Oil to VRT**	**Separator Water**
Properties	**Status:**	**Solved**	**Solved**	**Solved**	**Solved**	**Solved**
Phase: **Total**	**From Block:**	**VRT Oil LCV**	--	--	**Heater Treater**	--
	To Block:	**Oil Storage**	**MIX-100**	**MIX-100**	**VLVE-100**	**MIX-100**
Property	**Units**					
Temperature	°F	134.882	143*	143*	143	143*
Pressure	psia	14.7*	68*	68*	80	68*
Mole Fraction Vapor	%	0	100	0.807118	0	0
Mole Fraction Light Liquid	%	100	0	99.1929	100	100
Mole Fraction Heavy Liquid	%	0	0	0	0	0
Molecular Weight	lb/lbmol	115.099	25.7674	109.878	110.325	18.0153
Mass Density	lb/ft^3	42.8530	0.275674	32.8848	42.3075	61.3007
Molar Flow	lbmol/h	94.2968	25.6553	102.752	101.542	662.587
Mass Flow	lb/h	10853.5	661.069	11290.1	11202.6	11936.7
Vapor Volumetric Flow	ft^3/h	253.273	2398.01	343.323	264.789	194.723
Liquid Volumetric Flow	gpm	31.5769	298.972	42.8040	33.0126	24.2772
Std Vapor Volumetric Flow	MMSCFD	0.858820	0.233659*	0.935824	0.924802	6.03459
Std Liquid Volumetric Flow	sgpm	30.2702	3.34966	31.8322*	31.5639	23.8623*
Compressibility		0.00618807	0.982741	0.0351302	0.0322554	0.00308987
Specific Gravity		0.687087	0.889677		0.678342	0.982871
API Gravity		64.4169			65.4955	10.0053
Enthalpy	Btu/h	-9.17618E+06	-941806	-9.68263E+06	-9.54511E+06	-8.06514E+07
Mass Enthalpy	Btu/lb	-845.458	-1424.67	-857.618	-852.047	-6756.60
Mass Cp	Btu/(lb*°F)	0.529572	0.484996	0.536905	0.537434	0.984186
Ideal Gas CpCv Ratio		1.04294	1.19228	1.04452	1.04430	1.32242
Dynamic Viscosity	cP	0.380096	0.0113353		0.340635	0.462417
Kinematic Viscosity	cSt	0.553722	2.56694		0.502632	0.470921
Thermal Conductivity	Btu/(h*ft*°F)	0.0684844	0.0187563		0.0670865	0.375148
Surface Tension	lbf/ft	0.00123885?			0.00115850?	0.00449638
Net Ideal Gas Heating Value	Btu/ft^3	5806.01	1348.01	5534.99	5565.66	0
Net Liquid Heating Value	Btu/lb	18983.3	19763.2	18957.5	18985.0	-1059.76
Gross Ideal Gas Heating Value	Btu/ft^3	6248.99	1478.14	5959.07	5991.90	50.31
Gross Liquid Heating Value	Btu/lb	20443.8	21679.6	20422.1	20451.1	0

Process Streams		Separator Water to Storage	Stablized Oil	Water Flash Gas	Water Storage Inlet
Process Streams		**Separator Water to Storage**	**Stablized Oil**	**Water Flash Gas**	**Water Storage Inlet**
Properties	**Status:**	**Solved**	**Solved**	**Solved**	**Solved**
Phase: **Total**	**From Block:**	**Heater Treater**	**VRT**	**Water Storage**	**HT Water LCV**
	To Block:	**HT Water LCV**	**VRT Oil LCV**	**--**	**Water Storage**
Property	**Units**				
Temperature	°F	143	134.882	69.4*	143.138
Pressure	psia	80	14.7*	13.2	13.2*
Mole Fraction Vapor	%	0	0	100	0.0113067
Mole Fraction Light Liquid	%	100	100	0	99.9887
Mole Fraction Heavy Liquid	%	0	0	0	0
Molecular Weight	lb/lbmol	18.0176	115.099	24.9787	18.0176
Mass Density	lb/ft^3	61.2964	42.8530	0.0583233	51.6080
Molar Flow	lbmol/h	661.346	94.2968	0.0445000	661.346
Mass Flow	lb/h	11915.9	10853.5	1.11155	11915.9
Vapor Volumetric Flow	ft^3/h	194.398	253.273	19.0585	230.892
Liquid Volumetric Flow	gpm	24.2366	31.5769	2.37612	28.7865
Std Vapor Volumetric Flow	MMSCFD	6.02329	0.858820	0.000405290	6.02329
Std Liquid Volumetric Flow	sgpm	23.8257	30.2702	0.00545996	23.8257
Compressibility		0.00363588	0.00618807	0.995691	0.000712379
Specific Gravity		0.982802	0.687087	0.862446	
API Gravity		10.0137	64.4169		
Enthalpy	Btu/h	-8.04958E+07	-9.17618E+06	-2108.95	-8.04958E+07
Mass Enthalpy	Btu/lb	-6755.33	-845.458	-1897.30	-6755.33
Mass Cp	Btu/(lb*°F)	0.984192	0.529572	0.426031	0.984233
Ideal Gas CpCv Ratio		1.32239	1.04294	1.23049	1.32239
Dynamic Viscosity	cP	0.462192	0.380096	0.0106605	
Kinematic Viscosity	cSt	0.470724	0.553722	11.4108	
Thermal Conductivity	Btu/(h*ft*°F)	0.374898	0.0684844	0.0156735	
Surface Tension	lbf/ft	0.00449565	0.00123885?		
Net Ideal Gas Heating Value	Btu/ft^3	0.150270	5806.01	1138.89	0.150270
Net Liquid Heating Value	Btu/lb	-1056.34	18983.3	17205.1	-1056.34
Gross Ideal Gas Heating Value	Btu/ft^3	50.4658	6248.99	1252.75	50.4658
Gross Liquid Heating Value	Btu/lb	3.39867	20443.8	18934.9	3.39867

Process Streams		Water to Disposal	Wellhead Fluid	1	2	2-Phase Inlet
Process Streams		**Water to Disposal**	**Wellhead Fluid**	**1**	**2**	**2-Phase Inlet**
Properties	**Status:**	**Solved**	**Solved**	**Solved**	**Solved**	**Solved**
Phase: **Total**	**From Block:**	**Water Storage**	**XCHG-100**	**MIX-100**	**CMPR-100**	**FLOWLINE DELTA P**
	To Block:	--	**FLOWLINE DELTA P**	**CMPR-100**	**XCHG-100**	**Heater Treater**
Property	**Units**					
Temperature	°F	69.4	143*	140.663	141.785	143
Pressure	psia	13.2	80	68	80*	80
Mole Fraction Vapor	%	0	3.55328	3.72697	3.53390	3.55328
Mole Fraction Light Liquid	%	100	12.8372	12.6859	12.8508	12.8372
Mole Fraction Heavy Liquid	%	0	83.6095	83.5871	83.6153	83.6095
Molecular Weight	lb/lbmol	18.0172	30.1998	30.1998	30.1998	30.1998
Mass Density	lb/ft^3	62.2815	8.91278	7.48261	8.96821	8.91278
Molar Flow	lbmol/h	661.301	790.994	790.994	790.994	790.994
Mass Flow	lb/h	11914.8	23887.9	23887.9	23887.9	23887.9
Vapor Volumetric Flow	ft^3/h	191.305	2680.18	3192.45	2663.62	2680.18
Liquid Volumetric Flow	gpm	23.8510	334.153	398.020	332.087	334.153
Std Vapor Volumetric Flow	MMSCFD	6.02289	7.20408	7.20408	7.20408	7.20408
Std Liquid Volumetric Flow	sgpm	23.8203	59.0442	59.0442	59.0442	59.0442
Compressibility		0.000672549	0.0419119	0.0425995	0.0417371	0.0419119
Specific Gravity		0.998597				
API Gravity		10.0121				
Enthalpy	Btu/h	-8.13573E+07	-9.12440E+07	-9.12758E+07	-9.12677E+07	-9.12440E+07
Mass Enthalpy	Btu/lb	-6828.27	-3819.68	-3821.01	-3820.67	-3819.68
Mass Cp	Btu/(lb*°F)	0.983160	0.758330	0.756944	0.757936	0.758330
Ideal Gas CpCv Ratio		1.32586	1.17591	1.17626	1.17609	1.17591
Dynamic Viscosity	cP	1.00308				
Kinematic Viscosity	cSt	1.00544				
Thermal Conductivity	Btu/(h*ft*°F)	0.346710				
Surface Tension	lbf/ft	0.005046637				
Net Ideal Gas Heating Value	Btu/ft^3	0.0736427	762.728	762.728	762.728	762.728
Net Liquid Heating Value	Btu/lb	-1058.04	8977.26	8977.26	8977.26	8977.26
Gross Ideal Gas Heating Value	Btu/ft^3	50.3849	864.180	864.180	864.180	864.180
Gross Liquid Heating Value	Btu/lb	1.63251	10252.1	10252.1	10252.1	10252.1

Mary's Draw 411-15H
Detailed Emission Calculations and Supporting Documentation

TABLE 1

FACILITY INFORMATION SUMMARY - Mary's Draw 411-15H

FACILITY INFORMATION		
Facility ID	Mary's Draw 411-15H	Name of the facility

PRODUCTION DATA		DESCRIPTION
Daily Average Oil Production Rate	376.9	Average daily production in barrels of oil per day (BOPD), based on the first 365 days of production.
Produced Water Tank Throughput	253.7	Average daily production in barrels of water per day (BWPD), based on the first 365 days of production.
Daily Average Gas Production Rate	238.8	Average daily production of gas in Mscf per day, based on the first 365 days of production.

OIL/CONDENSATE TANKS		DESCRIPTION
Molecular Weight	43.80	Molecular weight of the tank vapors in pounds per pound-mole (lb/lb-mole). Obtained from promax.
VOC%	78.43	VOC weight fraction of the tank vapor gas (C3+). Obtained from Promax.
HAP%	0.74	HAP weight fraction of the tank vapor gas. Obtained from Promax.
H_2S weight %	0.00	H_2S weight percent of the tank vapor gas. Obtained from Promax.
Flare Efficiency	98%	Flare destruction efficiency to control tank vapor emissions

TREATER GAS DATA		DESCRIPTION
Heating Value	1,487.8	Btu/scf of wellstream gas.
Molecular Weight	26.99	Average molecular weight of the wellstream gas in lb/lb-mole.
Specific Gravity	0.93	If necessary to convert specific gravity to molecular weight, enter the specific gravity of the wellstream gas.
Calculated Molecular Weight	26.99	Calculated molecular weight based on the specific gravity entered above.
VOC%	45.19%	VOC weight fraction of the wellstream gas (C3+).
HAP%	3.74%	HAP weight fraction of the wellstream gas.
H_2S weight %	0.000%	H_2S weight percent of the wellstream gas
H_2S mole %	0.000%	H_2S mole percent of the wellstream gas

HEATER TREATER		DESCRIPTION
Firing Rate	750,000	Burner rating for the heater treater in Btu/hr.
Hours of Operation	8,760	The burner is assumed to operate 8,760 hours per year.

TRUCK LOADING		DESCRIPTION
Oil is hauled by truck		If sales oil pipeline is unavailable, oil will be hauled by truck
Submerged loading: dedicated normal service	0.6	Submerged loading: dedicated normal service
Molecular Weight	43.8	Molecular weight of tank vapors in lb/lb-mole (obtained from Promax)
Vapor Pressure	9.89	True vapor pressure of liquid loaded, pounds per square inch absolute (psia).
Temperature	46	Estimated average annual temperature of liquid loaded in °F
Load Rate (bbl/hr)	200	Maximum load rate of liquid loaded in barrels per hour.
Load Time (hrs)	1	The time it takes to loadout one load (hrs).

MISCELLANEOUS		DESCRIPTION
Pilot Fuel consumption	0.14	Fuel consumption in scf/min

TABLE 2

EMISSIONS SUMMARY - Mary's Draw 411-15H

UNCONTROLLED EMISSIONS

SOURCE	VOC	HAP	NOx	CO	H_2S	SO_2	CO_2e[a]
	(TPY)						(MT/yr)
Oil Tanks and VRT	458	13.76	--	--	0.00	--	
Water Tanks	0.44	0.02	--	--	--	--	
Treater Burner	0.02	0.01	0.32	0.27	0.00	0.00	
Truck Loading	15.08	0.05	--	--	--	--	
Fugitive	4.90	0.24	--	--	--	--	
Line Heater	0.01	0.00	0.16	0.14	0.00	0.00	
Blowdowns	0.02	0.02	--	--	--	--	
Totals	**478.14**	**14.07**	**0.48**	**0.41**	**0.00**	**0.00**	**644.83**

CONTROLLED EMISSIONS

SOURCE	VOC	HAP	NOx	CO	H_2S	SO_2	CO_2e
	(TPY)						(MT/yr)
VRT (Flashing)	9.02	0.27	--	--	0.00	--	
Oil Tanks	0.13	0.00	--	--	0.00	--	
Water Tanks	0.01	0.00	--	--	0.00	--	
Engineered Flare[b]	18.62	2.22	7.46	1.87	0.00	0.00	
Treater Burner	0.02	0.01	0.32	0.27	0.00	0.00	
Truck Loading	4.53	0.01	--	--	--	--	
Fugitive	4.90	0.24	--	--	--	--	
Line Heater	0.01	0.00	0.16	0.14	0.00	0.00	
Blowdowns	0.02	0.02					
Totals	**37.26**	**5.23**	**7.78**	**2.14**	**0.00**	**0.00**	**9,832.86**

Notes:

[a]Uncombusted GHG

[b]VRT, Oil Tanks, Water Tanks, and Truck Loading emissions are controlled by flare.

TABLE 3

HAZARDOUS AIR POLLUTANT (HAP) EMISSIONS SUMMARY - Mary's Draw 411-15H

UNCONTROLLED HAP EMISSION SUMMARY

SOURCE	POTENTIAL TO EMIT (TPY)					
	BENZENE	TOLUENE	ETHYLBENZENE	XYLENE	2,2,4 TMP	N-HEXANE
Oil Tanks and VRT	0.02	5.84	0.38	1.26	1.46	4.80
Water Tanks	0.00	0.01	0.00	0.00	0.00	0.01
Engineered Flare	0.02	6.32	0.40	1.32	1.59	5.02
Heater Treater	0.00	0.00	0.00	0.00	0.00	0.01
Truck Loading	0.00	0.00	0.00	0.00	0.01	0.04
Fugitive	0.00	0.02	0.02	0.02	0.07	0.10
Total	**0.04**	**12.19**	**0.80**	**2.61**	**3.13**	**9.97**

CONTROLLED HAP EMISSION SUMMARY

SOURCE	POTENTIAL TO EMIT (TPY)					
	BENZENE	TOLUENE	ETHYLBENZENE	XYLENE	2,2,4 TMP	N-HEXANE
Oil Tanks and VRT	0.00	0.12	0.01	0.03	0.03	0.10
Water Tanks	0.00	0.00	0.00	0.00	0.00	0.00
Engineered Flare	0.00	0.13	0.01	0.03	0.03	0.10
Heater Treater	0.00	0.00	0.00	0.00	0.00	0.01
Truck Loading	0.00	0.00	0.00	0.00	0.01	0.04
Fugitive	0.00	0.02	0.02	0.02	0.07	0.10
Total	**0.00**	**0.26**	**0.03**	**0.07**	**0.14**	**0.34**

Notes:

[a]No Gas Pipeline - gas produced from treater will be sent to engineered flare

[b]With Gas Pipeline - gas produced from treater will be sent to the gas pipeline

TABLE 4

WORKING, BREATHING & FLASHING EMISSIONS-OIL TANKS - Mary's Draw 411-15H

Flashing Emissions

Flare Control Efficiency % 98

Component	Uncontrolled Emissions		Controlled Emissions	
	TPY	lb/hr	TPY	lb/hr
Water	5.441	1.242	0.109	0.025
Hydrogen Sulfide	0.000	0.000	0.000	0.000
Oxygen	0.000	0.000	0.000	0.000
Carbon Dioxide	6.652	1.519	0.133	0.030
Nitrogen	0.277	0.063	0.006	0.001
Methane	33.010	7.536	0.660	0.151
Ethane	38.629	8.819	0.773	0.176
Propane	127.785	29.175	2.556	0.583
Iso-Butane	38.756	8.848	0.775	0.177
n-Butane	97.207	22.193	1.944	0.444
Iso-Pentane	42.237	9.643	0.845	0.193
n-Pentane	40.938	9.347	0.819	0.187
Heptanes	35.254	8.049	0.705	0.161
Octanes	15.161	3.461	0.303	0.069
Nonanes	1.809	0.413	0.036	0.008
Decanes+	38.126	8.704	0.763	0.174
Benzene	0.020	0.005	0.000	0.000
Toluene	5.811	1.327	0.116	0.027
Ethylbenzene	0.378	0.086	0.008	0.002
Xylenes	1.254	0.286	0.025	0.006
n-Hexane	4.781	1.091	0.096	0.022
2,2,4-Trimethylpentane	1.450	0.331	0.029	0.007
Total	534.975	122.141	10.700	2.443

Flashing Emissions Summary

Component	Uncontrolled Emissions		Controlled Emissions	
	TPY	lb/hr	TPY	lb/hr
VOC	450.967	102.960	9.019	2.059
H2S	0.000	0.000	0.000	0.000
HAPs	13.693	3.126	0.274	0.063

Working & Breathing Emissions

Flare Control Efficiency % 98

Component	Uncontrolled Emissions		Controlled Emissions	
	TPY	lb/hr	TPY	lb/hr
Water	0.000	0.000	0.000	0.000
Hydrogen Sulfide	0.000	0.000	0.000	0.000
Oxygen	0.000	0.000	0.000	0.000
Carbon Dioxide	0.171	0.039	0.003	0.001
Nitrogen	0.001	0.000	0.000	0.000
Methane	0.362	0.083	0.007	0.002
Ethane	1.308	0.299	0.026	0.006
Propane	3.061	0.699	0.061	0.014
iso-Butane	0.647	0.148	0.013	0.003
n-Butane	1.479	0.338	0.030	0.007
iso-Pentane	0.502	0.115	0.010	0.002
n-Pentane	0.445	0.102	0.009	0.002
Heptanes	0.283	0.065	0.006	0.001
Octanes	0.087	0.020	0.002	0.000
Nonanes	0.008	0.002	0.000	0.000
Decanes+	0.123	0.028	0.002	0.001
Benzene	0.000	0.000	0.000	0.000
Toluene	0.033	0.007	0.001	0.000
Ethylbenzene	0.002	0.000	0.000	0.000
Xylenes	0.004	0.001	0.000	0.000
n-Hexane	0.016	0.004	0.000	0.000
2,2,4-Trimethylpentane	0.009	0.002	0.000	0.000
Total	8.542	1.950	0.171	0.039

Working & Breathing Emissions Summary

Component	Uncontrolled Emissions		Controlled Emissions	
	TPY	lb/hr	TPY	lb/hr
VOC	6.699	1.530	0.134	0.031
H2S	0.000	0.000	0.000	0.000
HAPs	0.063	0.014	0.001	0.000

Notes:

Oil is flashed in a Vapor Recovery Tower and is captured by the flare.

Working, Breathing & Flashing emissions obtained from Promax

TABLE 5

WORKING, BREATHING & FLASHING EMISSIONS-WATER TANKS - Mary's Draw 411-15H

Flashing Emissions

Flare Control Efficiency % 98

Component	Uncontrolled Emissions		Controlled Emissions	
	TPY	lb/hr	TPY	lb/hr
Water	0.029	0.007	0.001	0.000
Hydrogen Sulfide	0.000	0.000	0.000	0.000
Oxygen	0.000	0.000	0.000	0.000
Carbon Dioxide	0.143	0.033	0.003	0.001
Nitrogen	0.009	0.002	0.000	0.000
Methane	0.639	0.146	0.013	0.003
Ethane	0.187	0.043	0.004	0.001
Propane	0.207	0.047	0.004	0.001
Iso-Butane	0.024	0.005	0.000	0.000
n-Butane	0.115	0.026	0.002	0.001
iso-Pentane	0.026	0.006	0.001	0.000
n-Pentane	0.029	0.007	0.001	0.000
Heptanes	0.010	0.002	0.000	0.000
Octanes	0.002	0.000	0.000	0.000
Nonanes	0.000	0.000	0.000	0.000
Decanes+	0.009	0.002	0.000	0.000
Benzene	0.000	0.000	0.000	0.000
Toluene	0.011	0.002	0.000	0.000
Ethylbenzene	0.001	0.000	0.000	0.000
Xylenes	0.002	0.000	0.000	0.000
n-Hexane	0.007	0.002	0.000	0.000
2,2,4-Trimethylpentane	0.000	0.000	0.000	0.000
Total	1.448	0.331	0.029	0.007

Flashing Emissions Summary

Component	Uncontrolled Emissions		Controlled Emissions	
	TPY	lb/yr	TPY	lb/yr
VOC	0.442	0.101	0.009	0.002
H2S	0.000	0.000	0.000	0.000
HAPs	0.021	0.005	0.000	0.000

Working & Breathing Emissions

Flare Control Efficiency % 98

Component	Uncontrolled Emissions		Controlled Emissions	
	TPY	lb/hr	TPY	lb/hr
Water	0.062	0.014	0.001	0.000
Hydrogen Sulfide	0.000	0.000	0.000	0.000
Oxygen	0.000	0.000	0.000	0.000
Carbon Dioxide	0.016	0.004	0.000	0.000
Nitrogen	0.000	0.000	0.000	0.000
Methane	0.004	0.001	0.000	0.000
Ethane	0.001	0.000	0.000	0.000
Propane	0.000	0.000	0.000	0.000
Iso-Butane	0.000	0.000	0.000	0.000
n-Butane	0.000	0.000	0.000	0.000
iso-Pentane	0.000	0.000	0.000	0.000
n-Pentane	0.000	0.000	0.000	0.000
Heptanes	0.000	0.000	0.000	0.000
Octanes	0.000	0.000	0.000	0.000
Nonanes	0.000	0.000	0.000	0.000
Decanes+	0.000	0.000	0.000	0.000
Benzene	0.000	0.000	0.000	0.000
Toluene	0.000	0.000	0.000	0.000
Ethylbenzene	0.000	0.000	0.000	0.000
Xylenes	0.000	0.000	0.000	0.000
n-Hexane	0.000	0.000	0.000	0.000
2,2,4-Trimethylpentane	0.000	0.000	0.000	0.000
Total	0.083	0.019	0.002	0.000

Working & Breathing Emissions Summary

Component	Uncontrolled Emissions		Controlled Emissions	
	TPY	lb/hr	TPY	lb/hr
VOC	0.000	0.000	0.000	0.000
H2S	0.000	0.000	0.000	0.000
HAPs	0.000	0.000	0.000	0.000

Notes:

Water is flashed in the tanks and is captured by the flare.

Working, Breathing & Flashing emissions obtained fromPromax

TABLE 6
ENGINEERED FLARE EMISSIONS - Mary's Draw 411-15H

Volume of Gas sent to Flare	196,261.2	scf/day
Lower Heating Value	1,488	Btu/scf
Average Molecular Weight	26.99	lb/lb-mole
Standard Molar Volume		
VOC Weight %	45.19%	
HAP Weight %	3.74%	
H_2S Weight %	0.00%	
H_2S Mole %	0.00%	
Flare Destruction Efficiency	98.00%	
Pipeline Downtime[2]	85%	

EMISSION RATE CALCULATION

Pollutant	Volume of Gas		Std Mol Vol	MW	Wt%	Usage	Flare Inlet (Uncontrolled) Emissions Hourly	Annual	Flare Outlet (Controlled) Emissions Hourly	Annual
	scf/day	*scf/hr*	*scf/lb-mol*	*lb/lb-mole*	*wt%*	*hrs/yr*	*lbs/hr*	*tpy*	*lbs/hr*	*tpy*
VOC	196,261	8,178	379	26.99	45.19%	8760	421.25	1615.23	8.43	32.30
HAP	196,261	8,178	379	26.99	3.74%	8760	28.63	124.88	0.57	2.50
H_2S	196,261	8,178	379	26.99	0.00%	8760	0.00	0.00	0.00	0.00
	Volume of Gas		Std Mol Vol	MW	E.F.[1]	Usage	Hourly	Annual	Hourly	Annual
	scf/day	*scf/hr*	*scf/lb-mol*	*lb/lb-mole*	*lb/ MMBtu*	*hr/yr*	*lbs/hr*	*tpy*	*lb/hr*	*tpy*
NO_X	196,261	8,178			0.14	8760	0.00	0.00	1.70	7.46
CO	196,261	8,178			0.035	8760	0.00	0.00	0.43	1.87
SO_2	196,261	8,178	379	64		8760	0.00	0.00	0.00	0.00

HAP SPECIATED EMISSIONS

		Emissions				
		Uncontrolled				Controlled
HAP	Weight	Treater Gas	F/W/B (Oil Tanks)	F/W/B (Water Tanks)	Total	Total
	%		*tpy*			*tpy*
Benzene	0.00	0.0007	0.0198	0.0000	0.0205	0.0004
Toluene	0.38	0.4771	5.8440	0.0109	6.3211	0.1264
Ethylbenzene	0.02	0.0242	0.3792	0.0007	0.4033	0.0081
Xylenes	0.05	0.0639	1.2583	0.0017	1.3222	0.0264
2,2,4-Trimethylpentane	0.11	0.1319	1.4591	0.0001	1.5910	0.0318
n-hexane	0.18	0.2283	4.7963	0.0073	5.0247	0.1005

Sample Calculations

Uncontrolled Emissions (VOC, HAP, and H_2S) = (volume of gas, scf/hr) * (weight, %) * (MW, lb/lbmol) * (conversion factor, scf/lbmol)
Controlled Emissions (VOC, HAP, and H_2S) = (emission rate, lbs/hr) * (1-destruction efficiency, %)
Emissions from NO_x and CO = (volume of gas, scf/hr) * (Lower heating value, Btu/scf) * (Emission factor, lb/MMBtu) * (Btu/MMBtu)

[1]NOx & CO emission factors are from AP-42 Table 13.5-1 ((Emission Factors for Flare Operations).)
HAP Speciation based on Extended Gas Analysis for Tank Vapor
[2]In the event of pipeline shut-in, the gas from the heater treater is flared.

TABLE 7

HEATER TREATER BURNER EMISSIONS - Mary's Draw 411-15H

Burner Rating: 750,000 Btu/hr

Burner Fuel: Natural Gas

Pollutant	Burner Rating	E.F.	Conv.	Usage	Emissions	
	MMBtu/hr	*lb/MMBtu*	*lb/ton*	*hr/yr*	*lb/hr*	*tpy*
VOC	0.75	0.0054	2000	8760	0.0040	0.0177
HAP	0.75	1.77E-03	2000	8760	0.0013	0.0058
NO_X	0.75	0.0980	2000	8760	0.0735	0.3221
CO	0.75	0.0824	2000	8760	0.0618	0.2705

HAP SPECIATED EMISSIONS

HAP	Burner Rating	HAP Emission Factor	Conv.	Usage	Emissions	
	MMBtu/hr	*lb/MMBtu*	*lb/ton*	*hr/yr*	*lbs/hr*	*tpy*
Benzene	0.75	2.06E-06	2000	8760	1.54E-06	6.76E-06
Toluene	0.75	3.33E-06	2000	8760	2.50E-06	1.10E-05
Ethylbenzene	0.75	0.00	2000	8760	0.00	0.00
Xylenes	0.75	0.00	2000	8760	0.00	0.00
2,2,4-Trimethylpentane	0.75	0.00	2000	8760	0.00	0.00
n-hexane	0.75	1.76E-03	2000	8760	1.32E-03	5.80E-03

NOx, CO & VOC Emission Factors are based on AP-42 Table 1.4-1 and 1.4-2

Emission factors were calculated using AP-42 Emissions for Natural Gas Combustion (Tables 1.4-1 and 1.4-2).

Natural gas heat content 1,020 Btu/scf

Propane Heat Content 91.5×10^6 Btu/1000 gallons

Sample Calculations- Benzene from Treater Burner

Benzene Emissions 750000 (Btu/hr) x 8760 hrs/year x 0.00000206 lbs/MMBtu x 1/ 1000000 (MMBtu/Btu) (1/2000) (tons/lb) 6.76E-06

TABLE 8
LINE HEATER BURNER EMISSIONS - Mary's Draw 411-15H

Burner Rating: 375,000 Btu/hr
Burner Fuel: Natural Gas

Pollutant	Burner Rating	E.F.	Conv.	Usage	Emissions	
	MMBtu/hr	*lb/MMBtu*	*lb/ton*	*hr/yr*	*lb/hr*	*tpy*
VOC	0.375	0.0054	2000	8760	0.0020	0.0089
HAP	0.375	1.77E-03	2000	8760	0.0007	0.0029
NO_X	0.375	0.0980	2000	8760	0.0368	0.1610
CO	0.375	0.0824	2000	8760	0.0309	0.1353

HAP SPECIATED EMISSIONS

HAP	Burner Rating	HAP Emission Factor	Conv.	Usage	Emissions	
	MMBtu/hr	*lb/MMBtu*	*lb/ton*	*hr/yr*	*lbs/hr*	*tpy*
Benzene	0.375	2.06E-06	2000	8760	7.72E-07	3.38E-06
Toluene	0.375	3.33E-06	2000	8760	1.25E-06	5.48E-06
Ethylbenzene	0.375	0.00	2000	8760	0.00	0.00
Xylenes	0.375	0.00	2000	8760	0.00	0.00
2,2,4-Trimethylpentane	0.375	0.00	2000	8760	0.00	0.00
n-hexane	0.375	1.76E-03	2000	8760	6.62E-04	2.90E-03

NOx, CO & VOC Emission Factors are based on AP-42 Table 1.4-1 and 1.4-2
Emission factors were calculated using AP-42 Emissions for Natural Gas Combustion (Tables 1.4-1 and 1.4-2).
Natural gas heat content 1,020 Btu/scf
Propane Heat Content 91.5×10^6 Btu/1000 gallons

Sample Calculations- Benzene from Treater Burner
Benzene Emissions 375000 (Btu/hr) x 8760 hrs/year x 0.00000206 lbs/MMBtu x 1/ 1000000 (MMBtu/Btu) (1/2000) (tons/lb) 3.38E-06

TABLE 9
TRUCK LOADING EMISSIONS - Mary's Draw 411-15H

Formula:	$L_L = 12.46 \frac{SPM}{T}$		AP-42, Chap. 5-2, Eq. 1: Loading Loss (lb/10^3 gallon of liquid loaded)
Where:	S =	0.6	Submerged loading: dedicated normal service *Source AP-42, Table 5.2-1*
	P =	9.89	True vapor pressure of liquid loaded
	M =	45.50	Molecular weight of tank vapors (lb/lb-mol)
	T =	505.50	Temperature of bulk liquid loaded (°R = °F+460)
	L_L =	6.66	lb/10^3 gallons of Loading loss

Truck Loading Emissions

Pollutant	Truck load rate	Annual Production	Load Time	Conversion Factor	Uncontrolled Emission Rates		Controlled Emission Rates	
	bbl/hr	*bbl/yr*	*hrs*	*gal/bbl*	*lbs/hr*	*tpy*	*lbs/hr*	*tpy*
VOC (C3+)	200.0	137,568.5	1.00	42	55.92	15.08	16.78	4.53

HAP Speciated Emissions

HAP	HAP Weight %	Uncontrolled Emission Rates		Controlled Emission Rates	
	%	*lb/hr*	*tpy*	*lb/hr*	*tpy*
Benzene	0.01	2.63E-03	9.05E-04	7.89E-04	2.72E-04
Toluene	0.00	1.49E-03	5.13E-04	4.47E-04	1.54E-04
Ethylbenzene	0.00	3.95E-04	1.36E-04	1.18E-04	4.07E-05
Xylenes	0.00	4.39E-04	1.51E-04	1.32E-04	4.53E-05
2,2,4-Trimethylpentane	0.06	2.52E-02	8.67E-03	7.57E-03	2.60E-03
n-Hexane	0.23	1.02E-01	3.51E-02	3.06E-02	1.05E-02
Total HAPs	0.30	0.13	0.05	0.04	0.01

(EPA AP-42 Values) Table 1 below is required to supply the saturation factor variable in the above equation.

Cargo Carrier	Mode of Operation	S Factor
Tank Trucks and Rail Tank Cars	Submerged loading of a clean cargo tank	0.50
	Submerged loading: dedicated normal service	0.60
	Submerged loading: dedicated vapor balance service	1.00

(EPA AP-42 Values) Table 2 below may be used to provide the vapor pressure and molecular weight values for the above equation.

Petroleum Liquid	Vapor MW at 60F Mv(lb/lb-mole)	Condensed Vapor Density at 60F Wvc(lb/gal	Liquid Density at 60F W1(lb/gal)	True Vapor Pressure, Pva (psi) at various temperatures in F						
				40	50	60	70	80	90	100
Crude Oil RVP 5	50	4.5	7.1	1.8	2.3	2.8	3.4	4	4.8	5.7

Sample Calculations- Benzene from Truck Loading Emissions

Benzene Emissions: 0.01 (% Wt Benzene) x 15.08 (TPY VOC) = 9.05E-04 (TPY)

Note: Truck loading vapors are controlled with 70% capture efficiency and routed to the flare.

TABLE 10
FUGITIVE EMISSIONS - Mary's Draw 411-15H

Fugitive Components	Stream Type	Number of Components (provided by EOG)	EPA Average Total Hydrocarbon Emission Factors [a] (lb/hr/source)	Fugitive VOC Emission Rates [a] (lbs/hour)	Fugitive VOC Emission Rates [a] (tons/year)	VOC EMISSIONS Total Gas (tons/year)	VOC EMISSIONS Total Heavy Oil (tons/year)	VOC EMISSIONS Total Light Oil (tons/year)	VOC EMISSIONS Total Water/ Light Oil (tons/year)
Connectors	Gas	395	4.58E-04	0.05	0.23	0.23			
	Heavy Oil	0	1.67E-05	0.00	0.00		0.00		
	Light Oil	277	4.58E-04	0.13	0.56			0.56	
	Water/Oil	51	2.42E-04	0.01	0.05				0.05
Valves	Gas	64	1.00E-02	0.19	0.82	0.82			
	Heavy Oil	0	1.83E-05	0.00	0.00		0.00		
	Light Oil	50	5.42E-03	0.27	1.19			1.19	
	Water/Oil	24	2.17E-04	0.01	0.02				0.02
Pumps	Gas	0	5.42E-03	0.00	0.00	0.00			
	Light Oil	1	2.88E-02	0.00	0.00	0.00	0.00	0.00	
	Water/Oil	0	5.42E-05	0.00	0.00				0.00
Flanges	Gas	9	8.75E-04	0.00	0.01	0.01			
	Heavy Oil	0	8.75E-07	0.00	0.00		0.00		
	Light Oil	8	2.42E-04	0.00	0.01			0.01	
	Water/Oil	4	6.25E-06	0.00	0.00				0.00
Open Ended Lines	Gas	7	4.58E-03	0.01	0.04	0.04			
	Heavy Oil	0	3.08E-04	0.00	0.00		0.00		
	Light Oil	3	3.08E-03	0.01	0.04			0.04	
	Water/Oil	5	5.42E-04	0.00	0.01				0.01
Others	Gas	32	1.96E-02	0.18	0.81	0.81			
	Heavy Oil	0	7.08E-05	0.00	0.00		0.00		
	Light Oil	4	1.67E-02	0.07	0.29			0.29	
	Water/Oil	6	3.08E-02	0.19	0.81				0.81
			Total Fugitive Emission Rates	**1.12**	**4.90**	**1.92**	**0.00**	**2.09**	**0.90**

Speciated HAP Weight Fraction

Component	Tank Vapor composition [b] mol%	MW of component	MW of W&S Stream	wt. fraction	Heavy oil composition [b] mol%	MW of component	MW of Heavy Oil Stream	wt. fraction	light oil and water/oil composition [b] mol%	MW of component	MW of LP Oil	wt. fraction
	%	lb/lb-mol	lb/lb-mol		%	lb/lb-mol	lb/lb-mol		%	lb/lb-mol	lb/lb-mol	
Benzene	-	78.11	-	5.38E-06	-	78.11	-	1.05E-03	-	78.11	-	1.05E-03
Toluene	-	92.13	-	3.82E-03	-	92.13	-	3.14E-03	-	92.13	-	3.14E-03
Ethylbenzene	-	106.17	-	1.94E-04	-	106.17	-	6.25E-03	-	106.17	-	6.25E-03
Xylenes	-	106.17	-	5.12E-04	-	106.17	-	7.35E-03	-	106.17	-	7.35E-03
n-hexane	-	86.18	-	1.83E-03	-	86.18	-	3.26E-02	-	86.18	-	3.26E-02
2,2,4-trimethylpentane	-	114.24	-	1.06E-03	-	114.24	-	2.43E-02	-	114.24	-	2.43E-02

TABLE 10

Fugitive HAP Emissions

	Fugitive VOC Emission Rates (tons/yr)	Speciated Fugitive HAP (weight fraction)[b]						Speciated Fugitive Emissions						
		Benzene	Toluene	Ethyl-Benzene	Xylenes	n-hexane	2,2,4 TMP	Benzene (tons/yr)	Toluene (tons/yr)	Ethyl-Benzene (tons/yr)	Xylenes (tons/yr)	n-hexane (tons/yr)	2,2,4 TMP (tons/yr)	Total HAP (tons/yr)
Gas	1.92	5.38E-06	3.82E-03	1.94E-04	5.12E-04	1.83E-03	1.06E-03	0.0000	0.0073	0.0004	0.0010	0.0035	0.0020	
Heavy Oil	0.00	1.05E-03	3.14E-03	6.25E-03	7.35E-03	3.26E-02	2.43E-02	0.0000	0.0000	0.0000	0.0000	0.0000	0.0000	
Light Oil	2.09	1.05E-03	3.14E-03	6.25E-03	7.35E-03	3.26E-02	2.43E-02	0.0022	0.0065	0.0130	0.0153	0.0680	0.0506	
Water/Light Oil	0.90	1.05E-03	3.14E-03	6.25E-03	7.35E-03	3.26E-02	2.43E-02	0.0009	0.0028	0.0056	0.0066	0.0293	0.0218	
Total	**4.90**							**0.0031**	**0.017**	**0.0190**	**0.0229**	**0.1008**	**0.0745**	**0.2370**

Notes:

[a] EPA Protocol for Equipment Leak Emission Estimates, November 1995, Table 2-4, Pages 2-15.

[b] HAP weight fractionsfor Tank Vapors obtained from Promaxs. HAP weight for Heavy Oil and Light Oil obtained from Liquid Analysis

Sample Calculations- Fugitive VOC and HAP (Benene) Emissions from Gas

VOC Emissions (connectors) 395 (# of components) x 0.000458 lbs/hr/source x 29.38% NMVOC from Summary -Extended Gas Analysis = 0.05 lbs/hr

Benzene Emissions (Gas) 1.92 tons/year AggregateFugitive VOC Emissions from Gas x 0.0000054 Fugitive Emission Factor = 0.0000 tons/year

TABLE 11
GREENHOUSE GAS EMISSIONS - Mary's Draw 411-15H

Flare CO_2 and CH_4 Emissions

Components	Mole fraction of treater gas constituents[a]	Volume of treater gas sent to flare *scf/year*	Mole fraction of tank vapor constituents[b]	Volume of flash gas *scf/year*	Volume of W/B sent to Flare *scf/year*	Component volume of gas sent to Flare *scf/year*	Component volume of gas for destruction *scf/year*	Number of carbon atoms	Flare Efficiency	Flared CO_2 Volume[c] *scf/year*	Unflared CO_2 and CH_4 Volume[c] *scf/year*	Volume GHGs Emitted *scf/year*
CO_2	0.006	71,066,702	0.020	9,440,668	153,123	192,438	644,048	1	0	–	644,048	165,198,246
Methane	0.479	71,066,702	0.042	9,440,668	153,123	407,092	34,470,538	1	0.98	33,781,127	689,411	689,411
Ethane	0.195	71,066,702	0.153	9,440,668	153,123	1,469,077	15,334,591	2	0.98	30,055,798	--	
Propane	0.152	71,066,702	0.358	9,440,668	153,123	3,438,444	14,234,180	3	0.98	41,848,489	--	
i-Butane	0.018	71,066,702	0.076	9,440,668	153,123	726,680	2,037,693	4	0.98	7,987,757	--	
n-Butane	0.056	71,066,702	0.173	9,440,668	153,123	1,661,602	5,668,834	4	0.98	22,221,828	--	
Pentane	0.027	71,066,702	0.111	9,440,668	153,123	1,063,583	2,951,683	5	0.98	14,463,246	--	
Hexane	0.010	71,066,702	0.002	9,440,668	153,123	17,540	739,927	6	0.98	4,350,768	--	
Benzene	0.001	71,066,702	0.000	9,440,668	153,123	52	45,832	6	0.98	269,489	--	
Heptanes	0.008	71,066,702	0.033	9,440,668	153,123	317,785	918,014	7	0.98	6,297,579	--	
Toluene	0.000	71,066,702	0.004	9,440,668	153,123	36,651	57,965	7	0.98	397,639	--	
Octane plus	0.001	71,066,702	0.027	9,440,668	153,123	255,203	352,287	8	0.98	2,761,930	--	
Ethyl benzene	0.000	71,066,702	0.000	9,440,668	153,123	1,857	3,995	8	0.98	31,322	--	
Xylenes	0.000	71,066,702	0.001	9,440,668	153,123	4,911	11,126	8	0.98	87,225	--	
Subtotal										**164,554,199**	--	

Flare CO_2 and CH_4 Emissions

Pollutant	Volume Emitted *scf/year*	Density of GHG[d] *lb/scf*	Operating Time *hrs/yr*	Conversion Factor *lb/ton*	Emissions[d] *lbs/hr*	*(tons/yr)*	GWF	CO_2e Emissions *MT/yr*
CO_2	165,198,246	0.12	8760	2000	2186.86	9,578.44	1	8689.37
CH_4	689,411	0.09	8760	2000	7.32	32.07	21	610.95
Subtotal								9300.32

Flare N_2O Emissions

N_2O Source	Volume of gas combusted No Gas Pipeline[i] *scf/year*	HHV *Btu/scf*	Emission Factor *lbs/MMBtu*	Operating Time *hrs/yr*	Conversion Factor *lb/ton*	Emissions[e] *lbs/hr*	*tons/yr*	GWF	CO_2e Emissions *MT/yr*
Flare	71,066,702	1,487.8	2.20E-04	8760	2000	2.66E-03	1.17E-02	310	3.28
Subtotal									3.28

TABLE 11
GREENHOUSE GAS EMISSIONS - Mary's Draw 411-15H

Heater Treater, Line Heater, and Pilot Emissions

Emission Source	Firing Rate *MMBtu/hr*	Operating Time *hrs/yr*	Fuel Type	CO_2 Emissions			CH_4 Emissions			N_2O Emissions			CO_{2e} Emissions
				Emission Factor[f] *kg/MMBtu*	GWF	Emissions *MT/yr*	Emission Factor[f] *kg/MMBtu*	GWF	Emissions *MT/yr*	Emission Factor[f] *kg/MMBtu*	GWF	Emissions *MT/yr*	*(MT/yr)*
Line Heater	0.375	8760	Natural Gas	53.06	1	174.30	0.001	25	0.003	0.0001	298	0.0003	174.48
Heater Treater	0.75	8760	Natural Gas	53.06	1	348.60	0.001	25	0.007	0.0001	298	0.0007	348.96
Pilot Gas[g]	0.01	8760	Natural Gas	53.06	1	5.81	0.001	25	0.000	0.0001	298	0.0000	5.81
Subtotal													**529.26**

GHG Emissions Summary

Emission Sources	CO_2e emissions
Flare (MT/yr)	9,303.60
Heater Treater, Line Heater, and Pilot (MT/yr)	529.26
Total Emissions (MT/yr)	9,832.86

Notes
a Mole Fraction from laboratory reports for Treater Gas
b Mole fraction from promax for Oil tanks
c 40 CFR 98.233 (n)(4): Eqns: W-19, W-20 and W-21
d 40 CFR 98.233(v) Eqn W-36 - density at 60F and 14.7 psia
e 40 CFR 98.233(z)(6) Eqn W-40
[f] 40 CFR 98.37 Table C-1
[g] MMBtu/hr based on fuel consumption and heating value of treater gas

Sample Calculations
Methane Volume for Destruction

(71,066,702 (scf/year-Volume of Treater Gas sent to flare) x 0.48 (mole fraction of methane in treater gas)) + (0.04 (mole fraction of methane in tank vapor) x 9,440,668 scf/year- Volume of flash sent to flare)) + (0.04 (methane mole fraction in tank vapors) x 153,123 scf/year- volume of flash sent to flare))	34,470,538	scf/year

Methane Combusted Volume

34,470,538 (scf/year- methane volume for destruction) x 1 (# of carbon atoms in methane) x0.98 (default fraction of methane combsted)	33,781,127	scf/year

Methane Uncombusted Volume

34,470,538 scf/year- total volume of gas for destruction x(1-0.98)default fraction of gas combusted	689,411	scf/year
689,411 (scf/year- Uncombusted Volume) x 0.093034964(lbs/scf- methane density)/ 8760 hrs/year - operating time	7.32	lbs/hr
7.32 (lbs/hr) x 8760 (hrs/year) x 21 (global warming potential for methane) x 0.9072 (MT/ton) x / 2000 (lb/ton)	610.97	MT/year

TABLE 12
PLANNED MSS EMISSIONS - Mary's Draw 411-15H

Number of events per year	3
Duration of each event (hrs)	0.5
Venting Volumetric Flow Rate (scf/hr)	1000

	Hourly Emissions (lb/hr)	*Annual Emissions (tpy)*
VOC	2.85E+01	2.14E-02
Benzene	3.59E-02	2.69E-05
Toluene	5.40E-02	4.05E-05
Ethylbenzene	9.50E-03	7.12E-06
Xylenes	2.99E-02	2.24E-05
2,2,4-Trimethylpentane	8.80E-02	6.60E-05
n-Hexane	1.47E+00	1.10E-03

Bryan Research & Engineering, Inc.

ProMax® 3.2

with

TSWEET® & PROSIM®

Copyright © BRE Group, Ltd 2002-2012. All Rights Reserved.

Simulation Report

Project: 1 - Vertical Battery with 2-Phase.pmx

Licensed to Conestoga-Rovers & Associates, Inc. and Affiliates

Client Name: EOG Wyoming
Location: Converse County, Wyoming
Job: Mary's Draw 411-15H

ProMax Filename: I:\Projects\EOG Wyoming\1 - Vertical Battery with 2-Phase.pmx
ProMax Version: 3.2.12198.0
Simulation Initiated: 12/18/2014 1:16:20 PM

Bryan Research & Engineering, Inc.
Chemical Engineering Consultants
P.O. Box 4747 Bryan, Texas 77805
Office: (979) 776-5220
FAX: (979) 776-4818
mailto:sales@bre.com
http://www.bre.com/

Report Navigator can be activated via the ProMax Navigator Toolbar.
An asterisk (*), throughout the report, denotes a user specified value.
A question mark (?) after a value, throughout the report, denotes an extrapolated or approximate value.

Properties	HT Gas to Sales	
Temperature(Total)	143	°F
Pressure(Total)	80*	psia

Properties	Gas from VRT	
Temperature(Total)	135.2	°F
Pressure(Total)	14.7	psia

Names	Units	Oil to Sales	Water to Disposal
Std Liquid Volumetric Flow	bbl/d	376.91	253.7
True Vapor Pressure	psia	9.8928	17.191
Reid Vapor Pressure	psi	5.639	1.0446
API Gravity		64.265	10.013

Stream Gas from VRT C3+ Mass Flow =451 ton/yr

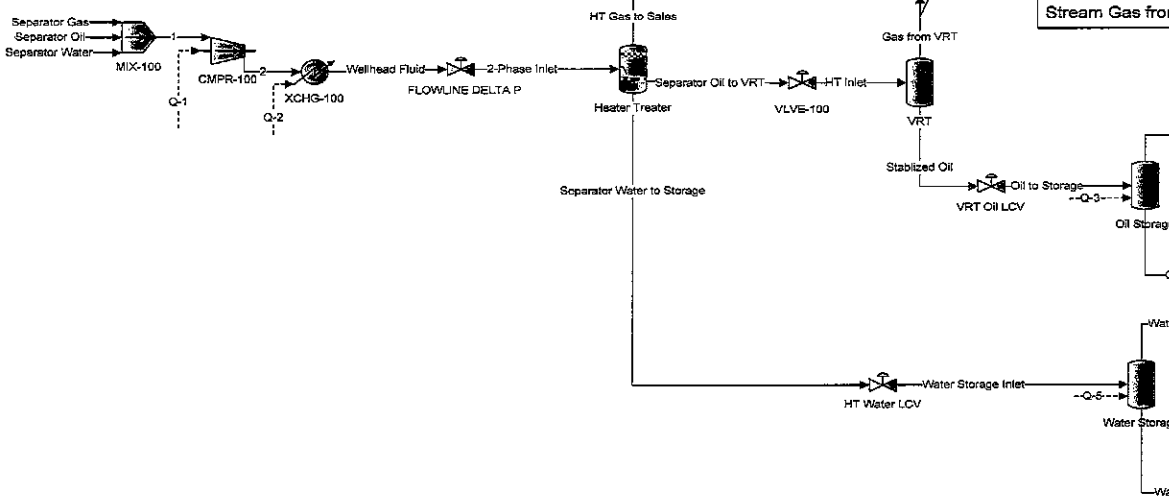

Stream Oil Flash Gas C3+ Mass Flow =0 ton/yr

Tank loss calculations for "Oil to Sales".
Total working and breathing losses from the Vertical Cylinder are 8.542 ton/yr.

Stream Water Flash Gas C3+ Mass Flow =0.4418 ton/yr

Tank loss calculations for "Water to Disposal".
Total working and breathing losses from the Vertical Cylinder are 0.0825 ton/yr.

Process Streams		Gas from VRT	HT Gas to Sales	HT Inlet	Oil Flash Gas	Oil to Sales
Composition	Status:	Solved	Solved	Solved	Solved	Solved
Phase: Total	From Block:	VRT	Heater Treater	VLVE-100	Oil Storage	Oil Storage
	To Block:	--	--	VRT	--	--
Mole Fraction		%	%	%	%	%
Water		2.69257	3.96098	0.213822		0.0282805
H2S		0	0	0		0
Oxygen		0	0	0		0
CO2		1.34746	2.04249	0.106615		0.0137346
Nitrogen		0.0881818	0.835571	0.00625230		0.000119648
Methane		18.3440	61.7620	1.34754		0.0753102
Ethane		11.4528	10.1055	1.00951		0.227795
Propane		25.8348	10.5745	3.43090		1.75390
Isobutane		5.94453	1.83571	1.17348		0.816351
n-Butane		14.9100	4.22611	3.61401		2.76848
Isopentane		5.21898	1.28818	2.37159		2.15845
n-Pentane		5.05845	1.21937	2.81346		2.64542
Hexane		3.64707	0.839848	5.16336		5.27686
Heptane		1.34891	0.313986	4.79427		5.05217
Octane		0.141183	0.0337831	1.31549		1.40339
Nonane		2.65010	0.654513	64.8378		69.4928
Decane		0.00123943	0.000319397	0.0764080		0.0820345
Benzene		0.663253	0.151495	1.01989		1.04658
Toluene		0.0365272	0.00843247	0.160777		0.170078
Ethylbenzene		0.105294	0.0250083	1.14119		1.21873
m-Xylene		0.401451	0.0959402	5.01393		5.35919
2,2,4-Trimethylpentane		0.113170	0.0262031	0.389675		0.410373
Molar Flow		lbmol/h	lbmol/h	lbmol/h	lbmol/h	lbmol/h
Water		0.0689561	0.996212	0.0786318	0	0.00967573
H2S		0	0	0	0	0
Oxygen		0	0	0	0	0
CO2		0.0345081	0.513699	0.0392072	0	0.00469908
Nitrogen		0.00225831	0.210152	0.00229925	0	4.09358E-05
Methane		0.469784	15.5335	0.495550	0	0.0257663
Ethane		0.293304	2.54161	0.371241	0	0.0779367
Propane		0.661624	2.65955	1.26170	0	0.600072
Isobutane		0.152238	0.461693	0.431540	0	0.279302
n-Butane		0.381841	1.06289	1.32903	0	0.947193
Isopentane		0.133657	0.323986	0.872139	0	0.738482
n-Pentane		0.129546	0.306679	1.03463	0	0.905089
Hexane		0.0934005	0.211227	1.89880	0	1.80540
Heptane		0.0345452	0.0789695	1.76307	0	1.72852
Octane		0.00361565	0.00849666	0.483764	0	0.480148
Nonane		0.0678684	0.164614	23.8438	0	23.7759
Decane		3.17415E-05	8.03305E-05	0.0280986	0	0.0280669
Benzene		0.0169857	0.0381020	0.375058	0	0.358072
Toluene		0.000935454	0.00212082	0.0591251	0	0.0581896
Ethylbenzene		0.00269656	0.00628975	0.419668	0	0.416971
m-Xylene		0.0102811	0.0241296	1.84385	0	1.83357
2,2,4-Trimethylpentane		0.00289825	0.00659026	0.143301	0	0.140403

Process Streams		Oil to Storage	Separator Gas	Separator Oil	Separator Oil to VRT	Separator Water
Composition	Status:	Solved	Solved	Solved	Solved	Solved
Phase: Total	From Block:	VRT Oil LCV	--	--	Heater Treater	--
	To Block:	Oil Storage	MIX-100	MIX-100	VLVE-100	MIX-100
Mole Fraction		%	%	%	%	%
Water		0.0282805	0*	0*	0.213822	100*
H2S		0	0*	0*	0	0*
Oxygen		0	0*	0*	0	0*
CO2		0.0137346	1.37357*	0.635345*	0.106615	0*
Nitrogen		0.000119648	0.867747*	0.0270444*	0.00625230	0*
Methane		0.0753102	66.6036*	1.35222*	1.34754	0*
Ethane		0.227795	11.1057*	0.864726*	1.00951	0*
Propane		1.75390	11.1934*	3.49440*	3.43090	0*
Isobutane		0.816351	1.61499*	1.37589*	1.17348	0*
n-Butane		2.76848	3.96801*	3.90673*	3.61401	0*
Isopentane		2.15845	0.969452*	2.58334*	2.37159	0*
n-Pentane		2.64542	1.03426*	2.92975*	2.81346	0*
Hexane		5.27686	0.385121*	5.37966*	5.16336	0*
Heptane		5.05217	0.0723039*	4.86024*	4.79427	0*
Octane		1.40339	0.00220012*	1.30947*	1.31549	0*
Nonane		69.4928	0.00360019*	63.9294*	64.8378	0*
Decane		0.0820345	0.0174009*	0.0642305*	0.0764080	0*
Benzene		1.04658	0.0222012*	1.09063*	1.01989	0*
Toluene		0.170078	0.00340018*	0.161173*	0.160777	0*
Ethylbenzene		1.21873	0.0107006*	1.12801*	1.14119	0*
m-Xylene		5.35919	0.723139*	4.52676*	5.01393	0*
2,2,4-Trimethylpentane		0.410373	0.0292016*	0.381008*	0.389675	0*
Molar Flow		lbmol/h	lbmol/h	lbmol/h	lbmol/h	lbmol/h
Water		0.00967573	0*	0*	0.0786318	206.496*
H2S		0	0*	0*	0	0*
Oxygen		0	0*	0*	0	0*
CO2		0.00469908	0.320349*	0.238593*	0.0392072	0*
Nitrogen		4.09358E-05	0.202379*	0.0101561*	0.00229925	0*
Methane		0.0257663	15.5335*	0.507803*	0.495550	0*
Ethane		0.0779367	2.59010*	0.324733*	0.371241	0*
Propane		0.600072	2.61056*	1.31226*	1.26170	0*
Isobutane		0.279302	0.376652*	0.516690*	0.431540	0*
n-Butane		0.947193	0.925432*	1.46710*	1.32903	0*
Isopentane		0.738482	0.226099*	0.970128*	0.872139	0*
n-Pentane		0.905089	0.241212*	1.10022*	1.03463	0*
Hexane		1.80540	0.0898190*	2.02024*	1.89880	0*
Heptane		1.72852	0.0168629*	1.82518*	1.76307	0*
Octane		0.480148	0.000513118*	0.491748*	0.483764	0*
Nonane		23.7759	0.000839648*	24.0076*	23.8438	0*
Decane		0.0280669	0.00405830*	0.0241207*	0.0280986	0*
Benzene		0.358072	0.00517783*	0.409566*	0.375058	0*
Toluene		0.0581896	0.000793001*	0.0605257*	0.0591251	0*
Ethylbenzene		0.416971	0.00249562*	0.423605*	0.419668	0*
m-Xylene		1.83357	0.168653*	1.69995*	1.84385	0*
2,2,4-Trimethylpentane		0.140403	0.00681048*	0.143081*	0.143301	0*

Process Streams		Separator Water to Storage	Stablized Oil	Water Flash Gas	Water Storage Inlet
Composition	Status:	Solved	Solved	Solved	Solved
Phase: Total	From Block:	Heater Treater	VRT	Water Storage	HT Water LCV
	To Block:	HT Water LCV	VRT Oil LCV	--	Water Storage
Mole Fraction		%	%	%	%
Water		99.9877	0.0282805	2.70497	99.9877
H2S		0	0	0	0
Oxygen		0	0	0	0
CO2		0.00293809	0.0137346	5.48322	0.00293809
Nitrogen		4.07793E-05	0.000119648	0.529107	4.07793E-05
Methane		0.00593592	0.0753102	66.9409	0.00593592
Ethane		0.000969111	0.227795	10.4359	0.000969111
Propane		0.000764596	1.75390	7.87831	0.000764596
Isobutane		5.27703E-05	0.816351	0.688086	5.27703E-05
n-Butane		0.000295529	2.76848	3.31559	0.000295529
Isopentane		4.94701E-05	2.15845	0.601065	4.94701E-05
n-Pentane		5.54253E-05	2.64542	0.677556	5.54253E-05
Hexane		1.46847E-05	5.27686	0.203888	1.46847E-05
Heptane		2.09359E-06	5.05217	0.0284280	2.09359E-06
Octane		3.34003E-07	1.40339	0.00473062	3.34003E-07
Nonane		8.50718E-06	69.4928	0.115848	8.50718E-06
Decane		2.20032E-09	0.0820345	3.11892E-05	2.20032E-09
Benzene		0.000770703	1.04658	0.235084	0.000770703
Toluene		3.54326E-05	0.170078	0.0130247	3.54326E-05
Ethylbenzene		6.95427E-05	1.21873	0.0271872	6.95427E-05
m-Xylene		0.000302931	5.35919	0.115741	0.000302931
2,2,4-Trimethylpentane		9.45796E-08	0.410373	0.00141395	9.45796E-08
Molar Flow		lbmol/h	lbmol/h	lbmol/h	lbmol/h
Water		205.421	0.00967573	0.000367199	205.421
H2S		0	0	0	0
Oxygen		0	0	0	0
CO2		0.00603621	0.00469908	0.000744345	0.00603621
Nitrogen		8.37795E-05	4.09358E-05	7.18261E-05	8.37795E-05
Methane		0.0121951	0.0257663	0.00908720	0.0121951
Ethane		0.00199100	0.0779367	0.00141666	0.00199100
Propane		0.00157083	0.600072	0.00106948	0.00157083
Isobutane		0.000108415	0.279302	9.34075E-05	0.000108415
n-Butane		0.000607153	0.947193	0.000450090	0.000607153
Isopentane		0.000101635	0.738482	8.15943E-05	0.000101635
n-Pentane		0.000113869	0.905089	9.19780E-05	0.000113869
Hexane		3.01691E-05	1.80540	2.76777E-05	3.01691E-05
Heptane		4.30121E-06	1.72852	3.85909E-06	4.30121E-06
Octane		6.86196E-07	0.480148	6.42180E-07	6.86196E-07
Nonane		1.74777E-05	23.7759	1.57263E-05	1.74777E-05
Decane		4.52048E-09	0.0280669	4.23392E-09	4.52048E-09
Benzene		0.00158338	0.358072	3.19126E-05	0.00158338
Toluene		7.27950E-05	0.0581896	1.76810E-06	7.27950E-05
Ethylbenzene		0.000142873	0.416971	3.69065E-06	0.000142873
m-Xylene		0.000622361	1.83357	1.57118E-05	0.000622361
2,2,4-Trimethylpentane		1.94310E-07	0.140403	1.91943E-07	1.94310E-07

Process Streams		Water to Disposal	Wellhead Fluid	1	2	2-Phase Inlet
Composition	Status:	Solved	Solved	Solved	Solved	Solved
Phase: Total	From Block:	Water Storage	XCHG-100	MIX-100	CMPR-100	FLOWLINE DELTA P
	To Block:	--	FLOWLINE DELTA P	CMPR-100	XCHG-100	Heater Treater
Mole Fraction		%	%	%	%	%
Water		99.9941	77.2318	77.2318	77.2318	77.2318
H2S		0	0	0	0	0
Oxygen		0	0	0	0	0
CO2		0.00257596	0.209051	0.209051	0.209051	0.209051
Nitrogen		5.81866E-06	0.0794904	0.0794904	0.0794904	0.0794904
Methane		0.00151288	5.99963	5.99963	5.99963	5.99963
Ethane		0.000279575	1.09018	1.09018	1.09018	1.09018
Propane		0.000244049	1.46718	1.46718	1.46718	1.46718
Isobutane		7.30512E-06	0.334120	0.334120	0.334120	0.334120
n-Butane		7.64545E-05	0.894836	0.894836	0.894836	0.894836
Isopentane		9.75516E-06	0.447403	0.447403	0.447403	0.447403
n-Pentane		1.06561E-05	0.501709	0.501709	0.501709	0.501709
Hexane		1.21272E-06	0.789185	0.789185	0.789185	0.789185
Heptane		2.15212E-07	0.688945	0.688945	0.688945	0.688945
Octane		2.14261E-08	0.184111	0.184111	0.184111	0.184111
Nonane		8.52647E-07	8.97942	8.97942	8.97942	8.97942
Decane		1.39492E-10	0.0105393	0.0105393	0.0105393	0.0105393
Benzene		0.000755220	0.155119	0.155119	0.155119	0.155119
Toluene		3.45743E-05	0.0229339	0.0229339	0.0229339	0.0229339
Ethylbenzene		6.77508E-05	0.159367	0.159367	0.159367	0.159367
m-Xylene		0.000295303	0.698877	0.698877	0.698877	0.698877
2,2,4-Trimethylpentane		1.15250E-09	0.0560612	0.0560612	0.0560612	0.0560612
Molar Flow		lbmol/h	lbmol/h	lbmol/h	lbmol/h	lbmol/h
Water		205.421	206.496	206.496	206.496	206.496
H2S		0	0	0	0	0
Oxygen		0	0	0	0	0
CO2		0.00529186	0.558942	0.558942	0.558942	0.558942
Nitrogen		1.19534E-05	0.212535	0.212535	0.212535	0.212535
Methane		0.00310794	16.0413	16.0413	16.0413	16.0413
Ethane		0.000574339	2.91484	2.91484	2.91484	2.91484
Propane		0.000501356	3.92282	3.92282	3.92282	3.92282
Isobutane		1.50071E-05	0.893342	0.893342	0.893342	0.893342
n-Butane		0.000157063	2.39254	2.39254	2.39254	2.39254
Isopentane		2.00403E-05	1.19623	1.19623	1.19623	1.19623
n-Pentane		2.18912E-05	1.34143	1.34143	1.34143	1.34143
Hexane		2.49133E-06	2.11005	2.11005	2.11005	2.11005
Heptane		4.42115E-07	1.84204	1.84204	1.84204	1.84204
Octane		4.40163E-08	0.492261	0.492261	0.492261	0.492261
Nonane		1.75141E-06	24.0084	24.0084	24.0084	24.0084
Decane		2.86563E-10	0.0281790	0.0281790	0.0281790	0.0281790
Benzene		0.00155147	0.414744	0.414744	0.414744	0.414744
Toluene		7.10269E-05	0.0613187	0.0613187	0.0613187	0.0613187
Ethylbenzene		0.000139182	0.426101	0.426101	0.426101	0.426101
m-Xylene		0.000606649	1.86860	1.86860	1.86860	1.86860
2,2,4-Trimethylpentane		2.36762E-09	0.149892	0.149892	0.149892	0.149892

Process Streams	Gas from VRT	HT Gas to Sales	HT Inlet	Oil Flash Gas	Oil to Sales
Mass Fraction	%	%	%	%	%
Water	1.01708	2.64388	0.0348317		0.00441879
H2S	0	0	0		0
Oxygen	0	0	0		0
CO2	1.24339	3.33046	0.0424275		0.00524249
Nitrogen	0.0517953	0.867256	0.00158375		2.90702E-05
Methane	6.17035	36.7105	0.195476		0.0104785
Ethane	7.22068	11.2584	0.274480		0.0594074
Propane	23.8862	17.2764	1.36800		0.670775
Isobutane	7.24445	3.95316	0.616736		0.411524
n-Butane	18.1704	9.10083	1.89939		1.39559
Isopentane	7.89515	3.44354	1.54721		1.35066
n-Pentane	7.65230	3.25958	1.83549		1.65538
Hexane	6.58981	2.68152	4.02344		3.94398
Heptane	2.83403	1.16569	4.34391		4.39066
Octane	0.338144	0.142979	1.35876		1.39036
Nonane	7.12661	3.11022	75.1943		77.3019
Decane	0.00369757	0.00168375	0.0983036		0.101233
Benzene	1.08628	0.438443	0.720363		0.709033
Toluene	0.0705673	0.0287868	0.133952		0.135914
Ethylbenzene	0.234386	0.0983702	1.09553		1.12219
m-Xylene	0.893633	0.377381	4.81329		4.93465
2,2,4-Trimethylpentane	0.271051	0.110899	0.402494		0.406564
Mass Flow	lb/h	lb/h	lb/h	lb/h	lb/h
Water	1.24226	17.9470	1.41657	0	0.174311
H2S	0	0	0	0	0
Oxygen	0	0	0	0	0
CO2	1.51868	22.6076	1.72549	0	0.206804
Nitrogen	0.0632631	5.88706	0.0644098	0	0.00114675
Methane	7.53649	249.196	7.94985	0	0.413354
Ethane	8.81938	76.4236	11.1629	0	2.34348
Propane	29.1747	117.275	55.6352	0	26.4605
Isobutane	8.84840	26.8346	25.0821	0	16.2337
n-Butane	22.1935	61.7777	77.2464	0	55.0529
Isopentane	9.64318	23.3752	62.9238	0	53.2806
n-Pentane	9.34657	22.1265	74.6477	0	65.3011
Hexane	8.04883	18.2026	163.630	0	155.581
Heptane	3.46149	7.91289	176.663	0	173.201
Octane	0.413011	0.970561	55.2596	0	54.8466
Nonane	8.70447	21.1126	3058.08	0	3049.38
Decane	0.00451623	0.0114296	3.99792	0	3.99340
Benzene	1.32679	2.97622	29.2965	0	27.9697
Toluene	0.0861912	0.195409	5.44769	0	5.36150
Ethylbenzene	0.286281	0.667751	44.5541	0	44.2678
m-Xylene	1.09149	2.56172	195.752	0	194.661
2,2,4-Trimethylpentane	0.331063	0.752796	16.3691	0	16.0380

Process Streams	Oil to Storage	Separator Gas	Separator Oil	Separator Oil to VRT	Separator Water
Mass Fraction	%	%	%	%	%
Water	0.00441879	0*	0*	0.0348317	100*
H2S	0	0*	0*	0	0*
Oxygen	0	0*	0*	0	0*
CO2	0.00524249	2.34600*	0.254476*	0.0424275	0*
Nitrogen	2.90702E-05	0.943385*	0.00689499*	0.00158375	0*
Methane	0.0104785	41.4666*	0.197428*	0.195476	0*
Ethane	0.0594074	12.9597*	0.236640*	0.274480	0*
Propane	0.670775	19.1552*	1.40235*	1.36800	0*
Isobutane	0.411524	3.64285*	0.727804*	0.616736	0*
n-Butane	1.39559	8.95046*	2.06655*	1.89939	0*
Isopentane	1.35066	2.71447*	1.69629*	1.54721	0*
n-Pentane	1.65538	2.89592*	1.92375*	1.83549	0*
Hexane	3.94398	1.28798*	4.21917*	4.02344	0*
Heptane	4.39066	0.281169*	4.43225*	4.34391	0*
Octane	1.39036	0.00975328*	1.36132*	1.35876	0*
Nonane	77.3019	0.0179197*	74.6216*	75.1943	0*
Decane	0.101233	0.0960841*	0.0831726*	0.0983036	0*
Benzene	0.709033	0.0673013*	0.775323*	0.720363	0*
Toluene	0.135914	0.0121583*	0.135152*	0.133952	0*
Ethylbenzene	1.12219	0.0440876*	1.08989*	1.09553	0*
m-Xylene	4.93465	2.97943*	4.37380*	4.81329	0*
2,2,4-Trimethylpentane	0.406564	0.129453*	0.396095*	0.402494	0*
Mass Flow	lb/h	lb/h	lb/h	lb/h	lb/h
Water	0.174311	0*	0*	1.41657	3720.08*
H2S	0	0*	0*	0	0*
Oxygen	0	0*	0*	0	0*
CO2	0.206804	14.0984*	10.5004*	1.72549	0*
Nitrogen	0.00114675	5.66931*	0.284506*	0.0644098	0*
Methane	0.413354	249.195*	8.14641*	7.94985	0*
Ethane	2.34348	77.8820*	9.76440*	11.1629	0*
Propane	26.4605	115.114*	57.8650*	55.6352	0*
Isobutane	16.2337	21.8919*	30.0312*	25.0821	0*
n-Butane	55.0529	53.7882*	85.2713*	77.2464	0*
Isopentane	53.2806	16.3127*	69.9936*	62.9238	0*
n-Pentane	65.3011	17.4032*	79.3792*	74.6477	0*
Hexane	155.581	7.74019*	174.095*	163.630	0*
Heptane	173.201	1.68970*	182.887*	176.663	0*
Octane	54.8466	0.0586127*	56.1716*	55.2596	0*
Nonane	3049.38	0.107689*	3079.09*	3058.08	0*
Decane	3.99340	0.577422*	3.43193*	3.99792	0*
Benzene	27.9697	0.404450*	31.9919*	29.2965	0*
Toluene	5.36150	0.0730659*	5.57674*	5.44769	0*
Ethylbenzene	44.2678	0.264948*	44.9720*	44.5541	0*
m-Xylene	194.661	17.9050*	180.475*	195.752	0*
2,2,4-Trimethylpentane	16.0380	0.777951*	16.3439*	16.3691	0*

Process Streams	Separator Water to Storage	Stablized Oil	Water Flash Gas	Water Storage Inlet
Mass Fraction	%	%	%	%
Water	99.9766	0.00441879	2.00075	99.9766
H2S	0	0	0	0
Oxygen	0	0	0	0
CO2	0.00717667	0.00524249	9.90765	0.00717667
Nitrogen	6.34039E-05	2.90702E-05	0.608552	6.34039E-05
Methane	0.00528530	0.0104785	44.0911	0.00528530
Ethane	0.00161735	0.0594074	12.8836	0.00161735
Propane	0.00187128	0.670775	14.2632	0.00187128
Isobutane	0.000170232	0.411524	1.64200	0.000170232
n-Butane	0.000953350	1.39559	7.91209	0.000953350
Isopentane	0.000198099	1.35066	1.78049	0.000198099
n-Pentane	0.000221946	1.65538	2.00707	0.000221946
Hexane	7.02356E-05	3.94398	0.721379	7.02356E-05
Heptane	1.16434E-05	4.39066	0.116953	1.16434E-05
Octane	2.11756E-06	1.39036	0.0221861	2.11756E-06
Nonane	6.05579E-05	77.3019	0.610029	6.05579E-05
Decane	1.73758E-08	0.101233	0.000182197	1.73758E-08
Benzene	0.00334129	0.709033	0.753927	0.00334129
Toluene	0.000181198	0.135914	0.0492718	0.000181198
Ethylbenzene	0.000409773	1.12219	0.118504	0.000409773
m-Xylene	0.00178499	4.93465	0.504495	0.00178499
2,2,4-Trimethylpentane	5.99629E-07	0.406564	0.00663126	5.99629E-07
Mass Flow	lb/h	lb/h	lb/h	lb/h
Water	3700.72	0.174311	0.00661520	3700.72
H2S	0	0	0	0
Oxygen	0	0	0	0
CO2	0.265650	0.206804	0.0327583	0.265650
Nitrogen	0.00234695	0.00114675	0.00201209	0.00234695
Methane	0.195640	0.413354	0.145781	0.195640
Ethane	0.0598675	2.34348	0.0425977	0.0598675
Propane	0.0692669	26.4605	0.0471593	0.0692669
Isobutane	0.00630129	16.2337	0.00542905	0.00630129
n-Butane	0.0352890	55.0529	0.0261602	0.0352890
Isopentane	0.00733281	53.2806	0.00588693	0.00733281
n-Pentane	0.00821552	65.3011	0.00663610	0.00821552
Hexane	0.00259983	155.581	0.00238514	0.00259983
Heptane	0.000430989	173.201	0.000386689	0.000430989
Octane	7.83832E-05	54.8466	7.33553E-05	7.83832E-05
Nonane	0.00224160	3049.38	0.00201698	0.00224160
Decane	6.43182E-07	3.99340	6.02409E-07	6.43182E-07
Benzene	0.123681	27.9697	0.00249275	0.123681
Toluene	0.00670721	5.36150	0.000162910	0.00670721
Ethylbenzene	0.0151681	44.2678	0.000391818	0.0151681
m-Xylene	0.0660730	194.661	0.00166804	0.0660730
2,2,4-Trimethylpentane	2.21958E-05	16.0380	2.19253E-05	2.21958E-05

Process Streams	Water to Disposal	Wellhead Fluid	1	2	2-Phase Inlet
Mass Fraction	%	%	%	%	%
Water	99.9853	44.0387	44.0387	44.0387	44.0387
H2S	0	0	0	0	0
Oxygen	0	0	0	0	0
CO2	0.00629225	0.291202	0.291202	0.291202	0.291202
Nitrogen	9.04711E-06	0.0704818	0.0704818	0.0704818	0.0704818
Methane	0.00134708	3.04644	3.04644	3.04644	3.04644
Ethane	0.000466594	1.03757	1.03757	1.03757	1.03757
Propane	0.000597301	2.04774	2.04774	2.04774	2.04774
Isobutane	2.35662E-05	0.614669	0.614669	0.614669	0.614669
n-Butane	0.000246641	1.64620	1.64620	1.64620	1.64620
Isopentane	3.90647E-05	1.02170	1.02170	1.02170	1.02170
n-Pentane	4.26726E-05	1.14572	1.14572	1.14572	1.14572
Hexane	5.80051E-06	2.15258	2.15258	2.15258	2.15258
Heptane	1.19691E-06	2.18503	2.18503	2.18503	2.18503
Octane	1.35844E-07	0.665659	0.665659	0.665659	0.665659
Nonane	6.06895E-06	36.4518	36.4518	36.4518	36.4518
Decane	1.10159E-09	0.0474630	0.0474630	0.0474630	0.0474630
Benzene	0.00327424	0.383511	0.383511	0.383511	0.383511
Toluene	0.000176813	0.0668829	0.0668829	0.0668829	0.0668829
Ethylbenzene	0.000399224	0.535519	0.535519	0.535519	0.535519
m-Xylene	0.00174008	2.34844	2.34844	2.34844	2.34844
2,2,4-Trimethylpentane	7.30698E-09	0.202690	0.202690	0.202690	0.202690
Mass Flow	lb/h	lb/h	lb/h	lb/h	lb/h
Water	3700.71	3720.08	3720.08	3720.08	3720.08
H2S	0	0	0	0	0
Oxygen	0	0	0	0	0
CO2	0.232892	24.5988	24.5988	24.5988	24.5988
Nitrogen	0.000334856	5.95382	5.95382	5.95382	5.95382
Methane	0.0498590	257.342	257.342	257.342	257.342
Ethane	0.0172698	87.6464	87.6464	87.6464	87.6464
Propane	0.0221076	172.979	172.979	172.979	172.979
Isobutane	0.000872247	51.9230	51.9230	51.9230	51.9230
n-Butane	0.00912882	139.059	139.059	139.059	139.059
Isopentane	0.00144588	86.3063	86.3063	86.3063	86.3063
n-Pentane	0.00157942	96.7824	96.7824	96.7824	96.7824
Hexane	0.000214692	181.835	181.835	181.835	181.835
Heptane	4.43008E-05	184.576	184.576	184.576	184.576
Octane	5.02792E-06	56.2302	56.2302	56.2302	56.2302
Nonane	0.000224627	3079.20	3079.20	3079.20	3079.20
Decane	4.07727E-08	4.00935	4.00935	4.00935	4.00935
Benzene	0.121188	32.3964	32.3964	32.3964	32.3964
Toluene	0.00654430	5.64981	5.64981	5.64981	5.64981
Ethylbenzene	0.0147763	45.2370	45.2370	45.2370	45.2370
m-Xylene	0.0644049	198.380	198.380	198.380	198.380
2,2,4-Trimethylpentane	2.70450E-07	17.1219	17.1219	17.1219	17.1219

Process Streams		Gas from VRT	HT Gas to Sales	HT Inlet	Oil Flash Gas	Oil to Sales
Properties	Status:	Solved	Solved	Solved	Solved	Solved
Phase: **Total**	From Block:	VRT	Heater Treater	VLVE-100	Oil Storage	Oil Storage
	To Block:	--	--	VRT	--	--
Property	**Units**					
Temperature	°F	135.170	143	107.375*	69.4*	69.4
Pressure	psia	14.7	80*	1.90410	14.7	14.7
Mole Fraction Vapor	%	100	100	20.2795		0
Mole Fraction Light Liquid	%	0	0	79.7205		100
Mole Fraction Heavy Liquid	%	0	0	0		0
Molecular Weight	lb/lbmol	47.6930	26.9899	110.591		115.299
Mass Density	lb/ft^3	0.111368	0.341439	0.170753		44.8116
Molar Flow	lbmol/h	2.56098	25.1506	36.7745	0	34.2135
Mass Flow	lb/h	122.141	678.814	4066.91	0	3944.77
Vapor Volumetric Flow	ft^3/h	1096.72	1988.10	23817.5		88.0301
Liquid Volumetric Flow	gpm	136.735	247.867	2969.45		10.9752
Std Vapor Volumetric Flow	MMSCFD	0.0233244	0.229063	0.334928	0	0.311604
Std Liquid Volumetric Flow	sgpm	0.455780	3.26546	11.4490	0	10.9932
Compressibility		0.986156	0.977767	0.202654		0.00666153
Specific Gravity		1.64671	0.931890			0.718491
API Gravity						64.2652
Enthalpy	Btu/h	-128055	-1.04421E+06	-3.45414E+06	0	-3.45814E+06
Mass Enthalpy	Btu/lb	-1048.42	-1538.29	-849.327		-876.639
Mass Cp	Btu/(lb*°F)	0.438257	0.481157	0.496946		0.489154
Ideal Gas CpCv Ratio		1.10564	1.18443	1.04663		1.04743
Dynamic Viscosity	cP	0.00916406	0.0113726			0.576276
Kinematic Viscosity	cSt	5.13694	2.07934			0.802823
Thermal Conductivity	Btu/(h*ft*°F)	0.0129098	0.0183156			0.0744453
Surface Tension	lbf/ft					0.00148064?
Net Ideal Gas Heating Value	Btu/ft^3	2424.96	1356.03	5578.86		5814.94
Net Liquid Heating Value	Btu/lb	19137.4	18946.3	18984.3		18979.6
Gross Ideal Gas Heating Value	Btu/ft^3	2632.56	1487.80	6005.72		6258.22
Gross Liquid Heating Value	Btu/lb	20789.1	20799.0	20449.1		20438.5

Process Streams		Oil to Storage	Separator Gas	Separator Oil	Separator Oil to VRT	Separator Water
Properties	Status:	Solved	Solved	Solved	Solved	Solved
Phase: **Total**	From Block:	VRT Oil LCV	--	--	Heater Treater	--
	To Block:	Oil Storage	MIX-100	MIX-100	VLVE-100	MIX-100
Property	**Units**					
Temperature	°F	135.170	143*	143*	143	143*
Pressure	psia	14.7*	68*	68*	80	68*
Mole Fraction Vapor	%	0	100	0.807118	0	0
Mole Fraction Light Liquid	%	100	0	99.1929	100	100
Mole Fraction Heavy Liquid	%	0	0	0	0	0
Molecular Weight	lb/lbmol	115.299	25.7674	109.878	110.591	18.0153
Mass Density	lb/ft^3	42.8810	0.275674	32.8848	42.3460	61.3007
Molar Flow	lbmol/h	34.2135	23.3223	37.5532	36.7745	206.496
Mass Flow	lb/h	3944.77	600.954	4126.27	4066.91	3720.08
Vapor Volumetric Flow	ft^3/h	91.9934	2179.94	125.476	96.0399	60.6858
Liquid Volumetric Flow	gpm	11.4693	271.785	15.6438	11.9738	7.56602
Std Vapor Volumetric Flow	MMSCFD	0.311604	0.212411*	0.342021	0.334928	1.88069
Std Liquid Volumetric Flow	sgpm	10.9932	3.04505	11.6339*	11.4490	7.43671*
Compressibility		0.00619174	0.982741	0.0351302	0.0323036	0.00308987
Specific Gravity		0.687536	0.889677		0.678960	0.982871
API Gravity		64.2652			65.3409	10.0053
Enthalpy	Btu/h	-3.32608E+06	-856162	-3.53877E+06	-3.45414E+06	-2.51351E+07
Mass Enthalpy	Btu/lb	-843.163	-1424.67	-857.618	-849.327	-6756.60
Mass Cp	Btu/(lb*°F)	0.529385	0.484996	0.536905	0.537044	0.984186
Ideal Gas CpCv Ratio		1.04287	1.19228	1.04452	1.04421	1.32242
Dynamic Viscosity	cP	0.380838	0.0113353		0.342109	0.462417
Kinematic Viscosity	cSt	0.554441	2.56694		0.504348	0.470921
Thermal Conductivity	Btu/(h*ft*°F)	0.0685002	0.0187563		0.0671458	0.375148
Surface Tension	lbf/ft	0.00124010?			0.00116114?	0.00449638
Net Ideal Gas Heating Value	Btu/ft^3	5814.94	1348.01	5534.99	5578.86	0
Net Liquid Heating Value	Btu/lb	18979.6	19763.2	18957.5	18984.3	-1059.76
Gross Ideal Gas Heating Value	Btu/ft^3	6258.22	1478.14	5959.07	6005.72	50.31
Gross Liquid Heating Value	Btu/lb	20438.5	21679.6	20422.1	20449.1	0

Process Streams		Separator Water to Storage	Stablized Oil	Water Flash Gas	Water Storage Inlet
Properties	Status:	Solved	Solved	Solved	Solved
Phase: Total	From Block:	Heater Treater	VRT	Water Storage	HT Water LCV
	To Block:	HT Water LCV	VRT Oil LCV	--	Water Storage
Property	Units				
Temperature	°F	143	135.170	69.4*	143.141
Pressure	psia	80	14.7*	13.2	13.2*
Mole Fraction Vapor	%	0	0	100	0.0107925
Mole Fraction Light Liquid	%	100	100	0	99.9892
Mole Fraction Heavy Liquid	%	0	0	0	0
Molecular Weight	lb/lbmol	18.0173	115.299	24.3563	18.0173
Mass Density	lb/ft^3	61.2959	42.8810	0.0568675	51.9806
Molar Flow	lbmol/h	205.446	34.2135	0.0135750	205.446
Mass Flow	lb/h	3701.58	3944.77	0.330636	3701.58
Vapor Volumetric Flow	ft^3/h	60.3888	91.9934	5.81414	71.2109
Liquid Volumetric Flow	gpm	7.52899	11.4693	0.724880	8.87825
Std Vapor Volumetric Flow	MMSCFD	1.87113	0.311604	0.000123636	1.87113
Std Liquid Volumetric Flow	sgpm	7.40126	10.9932	0.00166667	7.40126
Compressibility		0.00363583	0.00619174	0.995735	0.000707257
Specific Gravity		0.982795	0.687536	0.840957	
API Gravity		10.0149	64.2652		
Enthalpy	Btu/h	-2.50058E+07	-3.32608E+06	-599.633	-2.50058E+07
Mass Enthalpy	Btu/lb	-6755.42	-843.163	-1813.58	-6755.42
Mass Cp	Btu/(lb*°F)	0.984202	0.529385	0.436898	0.984249
Ideal Gas CpCv Ratio		1.32239	1.04287	1.23049	1.32239
Dynamic Viscosity	cP	0.462209	0.380838	0.0105446	
Kinematic Viscosity	cSt	0.470745	0.554441	11.5756	
Thermal Conductivity	Btu/(h*ft*°F)	0.374915	0.0685002	0.0158631	
Surface Tension	lbf/ft	0.00449571	0.00124010?		
Net Ideal Gas Heating Value	Btu/ft^3	0.150728	5814.94	1162.32	0.150728
Net Liquid Heating Value	Btu/lb	-1056.36	18979.6	18012.3	-1056.36
Gross Ideal Gas Heating Value	Btu/ft^3	50.4670	6258.22	1278.70	50.4670
Gross Liquid Heating Value	Btu/lb	3.41263	20438.5	19825.5	3.41263

Process Streams		Water to Disposal	Wellhead Fluid	1	2	2-Phase Inlet
Properties	Status:	Solved	Solved	Solved	Solved	Solved
Phase: Total	From Block:	Water Storage	XCHG-100	MIX-100	CMPR-100	FLOWLINE DELTA P
	To Block:	--	FLOWLINE DELTA P	CMPR-100	XCHG-100	Heater Treater
Property	Units					
Temperature	°F	69.4	143*	138.132	140.281	143
Pressure	psia	13.2	80	68	80*	80
Mole Fraction Vapor	%	0	9.40663	9.59386	9.32336	9.40663
Mole Fraction Light Liquid	%	100	13.7541	13.5859	13.8076	13.7541
Mole Fraction Heavy Liquid	%	0	76.8393	76.8202	76.8690	76.8393
Molecular Weight	lb/lbmol	18.0169	31.5939	31.5939	31.5939	31.5939
Mass Density	lb/ft^3	62.2811	3.93901	3.34267	3.98812	3.93901
Molar Flow	lbmol/h	205.433	267.371	267.371	267.371	267.371
Mass Flow	lb/h	3701.25	8447.31	8447.31	8447.31	8447.31
Vapor Volumetric Flow	ft^3/h	59.4282	2144.53	2527.11	2118.12	2144.53
Liquid Volumetric Flow	gpm	7.40923	267.370	315.068	264.077	267.370
Std Vapor Volumetric Flow	MMSCFD	1.87101	2.43512	2.43512	2.43512	2.43512
Std Liquid Volumetric Flow	sgpm	7.39959	22.1157	22.1157	22.1157	22.1157
Compressibility		0.000672542	0.0992117	0.100184	0.0984341	0.0992117
Specific Gravity		0.998591				
API Gravity		10.0130				
Enthalpy	Btu/h	-2.52735E+07	-2.95041E+07	-2.95300E+07	-2.95236E+07	-2.95041E+07
Mass Enthalpy	Btu/lb	-6828.35	-3492.72	-3495.79	-3495.03	-3492.72
Mass Cp	Btu/(lb*°F)	0.983167	0.728496	0.725984	0.727667	0.728496
Ideal Gas CpCv Ratio		1.32586	1.16655	1.16730	1.16697	1.16655
Dynamic Viscosity	cP	1.00314				
Kinematic Viscosity	cSt	1.00550				
Thermal Conductivity	Btu/(h*ft*°F)	0.346723				
Surface Tension	lbf/ft	0.005046797				
Net Ideal Gas Heating Value	Btu/ft^3	0.0739321	894.993	894.993	894.993	894.993
Net Liquid Heating Value	Btu/lb	-1058.06	10199.5	10199.5	10199.5	10199.5
Gross Ideal Gas Heating Value	Btu/ft^3	50.3858	1004.76	1004.76	1004.76	1004.76
Gross Liquid Heating Value	Btu/lb	1.64191	11518.0	11518.0	11518.0	11518.0

Process Description
Mary's Draw 412-1527H, Mary's Draw 411-15H
Production Facility

Mary's Draw 412-1527H, Mary's Draw 411-15H is an oil and gas production facility located in Converse County, Wyoming that receives production from two wells. The wells produce both crude oil and natural gas.

The Mary's Draw 412-1527H well equipment consists of the following sources of emissions:

- Five (5) Crude Oil Storage Tanks (400 bbl capacity each);
- Two (2) Produced Water Storage Tanks (400 bbl capacity each);
- One (1) Emergency Storage Tank (400 bbl capacity);
- One (1) Treater (0.75 MMBtu/hr burner capacity);
- One (1) Trace Line Heater (0.375 MMBtu/hr burner capacity);
- One (1) Vapor Recovery Tower (VRT);
- One (1) Flare;
- Truck Loading Operation;
- Blowdowns;
- Two (2) electric pumps (recycle and trace);
- Three (3) pneumatic pumps (VRT scrubber, recycle, and tank vent scrubber) and;
- Fugitive Components.

The Mary's Draw 411-15H well equipment consists of the following sources of emissions:

- Five (5) Crude Oil Storage Tanks (400 bbl capacity each);
- Two (2) Produced Water Storage Tanks (400 bbl capacity each);
- One (1) Emergency Storage Tank (400 bbl capacity);
- One (1) Treater (0.75 MMBtu/hr burner capacity);
- One (1) Trace Line Heater (0.375 MMBtu/hr burner capacity);
- One (1) Vapor Recovery Tower (VRT);
- One (1) Flare;
- Truck Loading Operation;
- Blowdowns;
- Two (2) electric pumps (recycle and trace);
- Three (3) pneumatic pumps (VRT scrubber, recycle, and tank vent scrubber) and;

- Fugitive Components.

Gas and liquids rise to the surface through the well head. The gas/liquid mixture enters a treater to separate the natural gas, crude oil, and produced water. The natural gas stream is tied into a pipeline. In the event of pipeline shut-in, the gas from the heater treater can be flared. Crude oil is sent to a vapor recovery tower (VRT) and water is sent to the produced water tanks. Oil from the VRT is sent to production oil tanks, and the flashed gas from the VRT and the tanks is sent to the flare. The crude oil is produced in five storage tanks and hauled away by truck. The water is produced in two storage tanks and also hauled away by truck as necessary. The tank vapors from the well's crude and produced water tanks are controlled and routed to a flare that has a destruction efficiency of 98%. The truck loading vapor emissions are controlled and routed to the flare with a capture efficiency of 70%. Pneumatic pump emissions are also routed to the flare.