Rowdy Pipeline, L.L.C.

P.O. Box 2560
Gillette, WY 82717
(307) 682-4638

408 Frontage Road
Gillette, WY 82716
Fax: (307) 682-4641

June 19, 2015

Mr. Nathan Henschel
Wyoming Department of Environmental Quality
Division of Air Quality
122 W. 25th Street
Herschler Building, 2-E
Cheyenne, WY 82002

RECEIVED
JUN 29 2015
AIR QUALITY DIVISION

Re: Construction Permit Application Amendment
Uprising Compressor Station
Rowdy Pipeline, LLC

Dear Mr. Henschel

Rowdy Pipeline, LLC recently submitted a request to amend an application for the Uprising Compressor Station. Rowdy requested the ability to use either caterpillar G3516Bs or 3516LEUs for units E5-E7. Rowdy Pipeline Requests that the emission limits for the requested Caterpillar G3516LEUs be increased such that the CO emissions limit and VOC emission limits are 0.5 g/hp-hr and 0.7 g/hp-hr respectively. Table 1 below summarizes the proposed emission limits for the units at this facility.

Table 1: Updated Proposed Emission Limits Uprising Compressor Station

Unit	Model	Rating (hp)	NOx (g/hp-hr)	CO (g/hp-hr)	VOC (g/hp-hr)	HCOH (g/hp-hr)
E5-E7	Caterpillar G3516B	1380	0.5	0.5	0.7	0.07
E5-E7	Caterpillar G3516LEU	1340	0.5	0.5	0.7	0.07
E1-E4	4 stroke rich burn	<637	0.7	2.0	0.7	0.05
E1-E4	4 stroke lean burn	<637	1.0	0.5	0.7	0.07

The justification for this request is simply that these Caterpillar G3516LEU units will not be able to meet the emission limits requested in the application amendment letter. The 0.25 g/hp-hr CO and 0.35 g/hp-hr VOC emission levels were obtained from a Caterpillar emission specification sheet that calculated emissions based on pipeline quality natural gas fuel use and control of those emissions based on an emit catalyst guarantee. These documents have been provided as attachment A. The actual emissions from one of these units operating with high VOC field gas have been included on another caterpillar specification sheet provided as attachment B. The Btu content of the gas on each of the specification sheets has been enclosed in a red rectangle.

The Caterpillar GERP program used to provide the field gas emissions for this unit will not provide an output if fuel with a heat value in excess of 1200 btu/scf is used. The fuel gas used at Uprising is expected to be in excess of 1200 btu/scf so even the new emission specification sheet is underestimating emissions.

The Calculations in table 2 are the controlled and uncontrolled emissions based on the new 3516LEU output in attachment B and the catalyst control guarantee from emit. Both the CO and VOC emission limits previously requested (0.25 and 0.35) are below what is predicted based on

Rowdy Pipeline, L.L.C.

P.O. Box 2560
Gillette, WY 82717
(307) 682-4638

408 Frontage Road
Gillette, WY 82716
Fax: (307) 682-4641

the composition of fuel at the facility. Given that emissions presented in Table 2 assume optimal control and fuel with a heat value lower than what will actually be used we request to increase the proposed emission limits for 3516LEUs at the Uprising compressor station such that they are in parody with the BACT emission level for caterpillar G3516Bs.

Table 2: Caterpillar G3516LEU Emissions

Pollutant	Uncontrolled Emissions	Control Efficiency	Controlled Emissions
NOx g/hp-hr	0.5	0%	0.5
CO g/hp-hr	4.76	93%	0.33
VOC g/hp-hr	1.28	50%	0.5686
HCOH g/hp-hr	0.21	84%	0.034

Table 3 below is an updated PTE table for the proposed modification previously submitted that has been modified to reflect BACT emission levels for the caterpillar G3516LEU engines.

Table 3: Updated Uprising PTE Table

ID	Source	Rating / Throughput	NOx[1]		CO[2]		VOC[3]		HCOH[4]	
			lb/hr	tpy	lb/hr	tpy	lb/hr	tpy	lb/hr	tpy
		New/Modified Proposed PTE								
E1	Lean/Rich <637 hp	<637 hp	1.40	6.20	0.70	3.10	1.00	4.30	0.10	0.43
E2	Lean/Rich <637 hp	<637 hp	1.40	6.20	0.70	3.10	1.00	4.30	0.10	0.43
E3	Lean/Rich <637 hp	<637 hp	1.40	6.20	0.70	3.10	1.00	4.30	0.10	0.43
E4	Lean/Rich <637 hp	<637 hp	1.40	6.20	0.70	3.10	1.00	4.30	0.10	0.43
E5	Caterpillar G3516B or 3516LEU	1380hp or 1340hp	1.48	6.47	1.48	6.47	2.07	9.06	0.21	0.91
E6	Caterpillar G3516B or 3516LEU	1380hp or 1340hp	1.48	6.47	1.48	6.47	2.07	9.06	0.21	0.91
E7	Caterpillar G3516B or 3516LEU	1380hp or 1340hp	1.48	6.47	1.48	6.47	2.07	9.06	0.21	0.91
E9	Ajax 2802LE	353 hp	0.80	3.40	1.60	6.80	0.40	1.90	0.23	1.02
D1a	10 MMscfd TEG still Vent	10 MMscfd	--	--	--	--	Controlled by Condenser/ Reboiler			
D1b	10 MMscfd TEG flash Vent	10 MMscfd	--	--	--	--	Controlled by Reboiler			
R1	Dehy 1 reboiler	750 Mbtu/hr	0.10	0.30	0.10	0.30	1.10	4.90	<0.01	0.01
D2a	10 MMscfd TEG still Vent	10 MMscfd	--	--	--	--	Controlled by Condenser/ Reboiler			
D2b	10 MMscfd TEG flash Vent	10 MMscfd	--	--	--	--	Controlled by Reboiler			
R2	Dehy 2 reboiler	750 Mbtu/hr	0.10	0.30	0.10	0.30	1.10	4.90	<0.01	0.01
T1 - T2	Condensate Tanks	400 bbl	--	--	--	--	Controlled By LP Flare			
T3-T4	Produced Water Tanks	400 bbl	--	--	--	--	0.07	0.29	--	--
BD	Compressor Blow Down Emissions		--	--	--	--	Controlled By HP Flare			
RP	Rod Packing Vents	3 recips	--	--	--	--	5.62	24.63	--	--
H1	Line Heater	1.5 Mbtu/hr or less	0.15	0.64	0.12	0.54	0.01	0.04	0.00	0.00
PIG	Pigging Activities		--	--	--	--	--	2.01	--	--
FL1	High Pressure Flare	0.25 MMBtu/hr	0.07	0.31	0.02	0.08	0.29	1.25	0.00	0.00
FL2	Low Pressure Flare	0.75 MMBtu/hr	0.10	0.45	0.03	0.11	0.67	2.95	0.00	0.00
Start	Engine Starter Emissions		--	--	--	--	0.70	3.10	--	--
Fug	Fugatives		--	--	--	--	3.90	17.10	--	--
		New PTE Total:	11.35	49.61	9.20	39.94	24.06	107.44	1.25	5.48
		Change in Emissions:	-0.9	-4.4	-0.2	-1.5	-16.1	-69.5	-0.1	-0.5

[1] Worste case NOx totals 50 tpy depending on engine configuration
[2] Worste case CO totals 77.3 tpy depending on engine configuration
[3] Worste case VOC totals 108.3 tpy depending on engine configuration
[4] Formaldeyde is the only significant HAP emitted from the engines Worst case total is 5.6 tpy depending on engine configuration

Rowdy Pipeline, L.L.C.

P.O. Box 2560
Gillette, WY 82717
(307) 682-4638

408 Frontage Road
Gillette, WY 82716
Fax: (307) 682-4641

Table 4 includes updated emission calculations for a caterpillar G3516LEU. The g/hp-hr emission factors and fuel heat value have been updated.

Table 4: Caterpillar G3516LEU updated Emission Calculations

Source ID	E5-E7	Engine rating	1340	BHP
Source Description	4-Stroke Lean Burn	Fuel HHV	1305	Btu/scf
Engine Make	Caterpillar	Heat Rate	9.8	MMBtu/hr
Engine Model	G3516LEU	Engine Heat Rate	7301	Btu/hp-hr
Serial Number	TBD	Hours of Operation	8760	hr/year
Manufacture Date	TBD	Potential Fuel Usage	7497	scf/hr
Emission Controls	Oxidation Catalyst		65.7	MMscf/yr

PTE Emissions					
Species	Emission Factor		Estimated Emissions		Source of emission Factor
	lb/MMBtu	g/hp-hr	lb/hr	ton/yr	
NO_X	0.151	0.500	1.48	6.470	WDEQ BACT
CO	0.151	0.500	1.48	6.470	WDEQ BACT
VOC	0.211	0.700	2.07	9.058	WDEQ BACT
SO_X	0.001	0.002	0.01	0.025	AP 42 Table 3.2-2
PM_{10}[1]	0.0100	0.033	0.10	0.428	AP 42 Table 3.2-2
$PM_{2.5}$[1]	0.0100	0.033	0.10	0.428	AP 42 Table 3.2-2
HCOH	0.021	0.070	0.21	0.906	WDEQ BACT
n-Hexane	0.001	0.004	0.01	0.048	AP 42 Table 3.2-2
Benzene	0.000	0.001	0.00	0.019	AP 42 Table 3.2-2
Toluene	0.000	0.001	0.00	0.017	AP 42 Table 3.2-2
Acrolein	0.005	0.017	0.05	0.220	AP 42 Table 3.2-2
Acetaldehyde	0.008	0.028	0.08	0.358	AP 42 Table 3.2-2

Green House Gas Emissions					
Species	Emission Factor		Estimated Emissions		Source of emission Factor
	Kg/MMBtu	g/hp-hr	lb/hr	ton/yr	
CO_2	53.06	387.4	1144.43	5012.59	40 CFR Part 98, Subpart C Tables C-1 & C-2
CH_4	0.001	0.007	0.02	0.09	
N_2O	0.0001	0.0007	0.002	0.009	
CO_2e	--	--	1145.61	5017.77	

If you have any additional questions please feel free to contact me at kegan@agaveenergy.com or (575) 748-4469.

Sincerely,
ROWDY PIPELINE, LLC

Kerry Egan

Cc: Jennifer Knowlton—Rowdy
Jeff Eichman – Compliance Partners

Rowdy Pipeline, L.L.C.

P.O. Box 2560
Gillette, WY 82717
(307) 682-4638

408 Frontage Road
Gillette, WY 82716
Fax: (307) 682-4641

Attachment A

G3516

GAS ENGINE TECHNICAL DATA

CATERPILLAR®

ENGINE SPEED (rpm):	1400	RATING STRATEGY:	LOW NOX UPGRADE
COMPRESSION RATIO:	8:1	APPLICATION:	GAS COMPRESSION
AFTERCOOLER TYPE:	SCAC	RATING LEVEL:	CONTINUOUS
AFTERCOOLER - STAGE 2 INLET (°F):	130	FUEL:	NAT GAS
AFTERCOOLER - STAGE 1 INLET (°F):	201	FUEL SYSTEM:	HPG IMPCO WITH AIR FUEL RATIO CONTROL
JACKET WATER OUTLET (°F):	210		
ASPIRATION:	TA	FUEL PRESSURE RANGE(psig):	40.0-45.0
COOLING SYSTEM:	JW+OC+1AC, 2AC	FUEL METHANE NUMBER:	80
CONTROL SYSTEM:	ADEM3	FUEL LHV (Btu/scf):	905
EXHAUST MANIFOLD:	ASWC	ALTITUDE CAPABILITY AT 77°F INLET AIR TEMP. (ft):	5700
COMBUSTION:	LOW EMISSION		
NOx EMISSION LEVEL (g/bhp-hr NOx):	0.5		

RATING		NOTES	LOAD	100%	75%	50%
ENGINE POWER	(WITHOUT FAN)	(1)	bhp	1340	1005	671
ENGINE EFFICIENCY	(ISO 3046/1)	(2)	%	31.0	29.8	28.6
ENGINE EFFICIENCY	(NOMINAL)	(2)	%	30.5	29.2	28.1
ENGINE DATA						
FUEL CONSUMPTION	(ISO 3046/1)	(3)	Btu/bhp-hr	8195	8539	8891
FUEL CONSUMPTION	(NOMINAL)	(3)	Btu/bhp-hr	8356	8705	9064
AIR FLOW (77°F, 14.7 psia)	(WET)	(4) (5)	ft3/min	3279	2545	1715
AIR FLOW	(WET)	(4) (5)	lb/hr	14539	11284	7604
FUEL FLOW (60°F, 14.7 psia)			scfm	206	161	112
COMPRESSOR OUT PRESSURE			In Hg(abs)	92.2	79.9	60.7
COMPRESSOR OUT TEMPERATURE			°F	349	304	236
AFTERCOOLER AIR OUT TEMPERATURE			°F	136	133	129
INLET MAN. PRESSURE		(6)	In Hg(abs)	78.5	64.2	44.1
INLET MAN. TEMPERATURE	(MEASURED IN PLENUM)	(7)	°F	140	136	130
TIMING		(8)	°BTDC	33	33	33
EXHAUST TEMPERATURE - ENGINE OUTLET		(9)	°F	952	957	959
EXHAUST GAS FLOW (@engine outlet temp, 14.5 psia)	(WET)	(10) (5)	ft3/min	9323	7234	4913
EXHAUST GAS MASS FLOW	(WET)	(10) (5)	lb/hr	15104	11725	7910
EMISSIONS DATA - ENGINE OUT						
NOx (as NO2)		(11)(12)	g/bhp-hr	0.50	0.50	0.50
CO		(11)(13)	g/bhp-hr	3.05	3.07	2.99
THC (mol. wt. of 15.84)		(11)(13)	g/bhp-hr	4.55	5.03	5.25
NMHC (mol. wt. of 15.84)		(11)(13)	g/bhp-hr	0.68	0.75	0.79
NMNEHC (VOCs) (mol. wt. of 15.84)		(11)(13)(14)	g/bhp-hr	0.46	0.50	0.52
HCHO (Formaldehyde)		(11)(13)	g/bhp-hr	0.28	0.56	0.59
CO2		(11)(13)	g/bhp-hr	532	550	562
EXHAUST OXYGEN		(11)(15)	% DRY	8.5	8.4	8.0
LAMBDA		(11)(15)		1.62	1.61	1.58
ENERGY BALANCE DATA						
LHV INPUT		(16)	Btu/min	186586	145778	101287
HEAT REJECTION TO JACKET WATER (JW)		(17)(25)	Btu/min	42188	35992	28321
HEAT REJECTION TO ATMOSPHERE		(18)	Btu/min	5313	4426	3545
HEAT REJECTION TO LUBE OIL (OC)		(19)(25)	Btu/min	6292	5366	4224
HEAT REJECTION TO EXHAUST (LHV TO 77°F)		(20)(21)	Btu/min	61513	48046	32359
HEAT REJECTION TO EXHAUST (LHV TO 350°F)		(20)	Btu/min	40941	32068	21766
HEAT REJECTION TO A/C - STAGE 1 (1AC)		(22)(25)	Btu/min	8986	4850	1109
HEAT REJECTION TO A/C - STAGE 2 (2AC)		(23)(26)	Btu/min	4629	3652	2463
PUMP POWER		(24)	Btu/min	833	833	833

CONDITIONS AND DEFINITIONS

Engine rating obtained and presented in accordance with ISO 3046/1. (Standard reference conditions of 77°F, 29.60 in Hg barometric pressure.) No overload permitted at rating shown. Consult the altitude deration factor chart for applications that exceed the rated altitude or temperature.

Emission levels are at engine exhaust flange prior to any after treatment. Values are based on engine operating at steady state conditions, adjusted to the specified NOx level at 100% load. Tolerances specified are dependent upon fuel quality. Fuel methane number cannot vary more than ± 3.

For notes information consult page three.

FUEL USAGE GUIDE

CAT METHANE NUMBER	25	30	35	40	45	50	55	60	65	70	75	80	100
SET POINT TIMING	24	24	24	24	25	26	27	28	29	30	31	33	33
DERATION FACTOR	0.70	0.90	0.93	0.97	1	1	1	1	1	1	1	1	1

ALTITUDE DERATION FACTORS AT RATED SPEED

INLET AIR TEMP °F	0	1000	2000	3000	4000	5000	6000	7000	8000	9000	10000	11000	12000
130	1	1	0.95	0.90	0.85	0.80	0.76	0.72	0.69	0.65	0.62	0.59	0.56
120	1	1	1	0.95	0.89	0.85	0.80	0.76	0.72	0.69	0.66	0.62	0.59
110	1	1	1	1	0.94	0.89	0.85	0.80	0.76	0.73	0.69	0.66	0.63
100	1	1	1	1	0.99	0.94	0.89	0.84	0.80	0.76	0.73	0.69	0.66
90	1	1	1	1	1	0.96	0.91	0.87	0.83	0.79	0.76	0.72	0.69
80	1	1	1	1	1	1	0.96	0.91	0.87	0.83	0.79	0.76	0.72
70	1	1	1	1	1	1	1	0.95	0.90	0.86	0.82	0.78	0.76
60	1	1	1	1	1	1	1	0.97	0.92	0.88	0.84	0.80	0.77
50	1	1	1	1	1	1	1	1	0.95	0.90	0.86	0.82	0.79

ALTITUDE (FEET ABOVE SEA LEVEL)

AFTERCOOLER HEAT REJECTION FACTORS (ACHRF)

INLET AIR TEMP °F	0	1000	2000	3000	4000	5000	6000	7000	8000	9000	10000	11000	12000
130	1.35	1.40	1.46	1.51	1.57	1.62	1.67	1.67	1.67	1.67	1.67	1.67	1.67
120	1.28	1.33	1.38	1.44	1.49	1.55	1.59	1.59	1.59	1.59	1.59	1.59	1.59
110	1.21	1.26	1.31	1.37	1.42	1.47	1.51	1.51	1.51	1.51	1.51	1.51	1.51
100	1.14	1.19	1.24	1.29	1.34	1.40	1.44	1.44	1.44	1.44	1.44	1.44	1.44
90	1.07	1.12	1.17	1.22	1.27	1.32	1.36	1.36	1.36	1.36	1.36	1.36	1.36
80	1	1.05	1.09	1.15	1.20	1.26	1.29	1.29	1.29	1.29	1.29	1.29	1.29
70	1	1	1.02	1.07	1.12	1.17	1.21	1.21	1.21	1.21	1.21	1.21	1.21
60	1	1	1	1	1.05	1.10	1.13	1.13	1.13	1.13	1.13	1.13	1.13
50	1	1	1	1	1	1.02	1.06	1.06	1.06	1.06	1.06	1.06	1.06

ALTITUDE (FEET ABOVE SEA LEVEL)

MINIMUM SPEED CAPABILITY AT THE RATED SPEED'S SITE TORQUE (RPM)

INLET AIR TEMP °F	0	1000	2000	3000	4000	5000	6000	7000	8000	9000	10000	11000	12000
130	1050	1050	1050	1050	1050	1050	1050	1050	1050	1050	1050	1090	1200
120	1050	1050	1050	1050	1050	1050	1050	1050	1050	1050	1050	1070	1090
110	1050	1050	1050	1050	1050	1050	1050	1050	1050	1050	1050	1060	1080
100	1050	1050	1050	1050	1050	1050	1050	1050	1050	1050	1060	1060	1070
90	1050	1050	1050	1050	1050	1050	1050	1050	1050	1050	1050	1050	1050
80	1050	1050	1050	1050	1050	1050	1050	1050	1050	1050	1050	1050	1050
70	1050	1050	1050	1050	1050	1050	1050	1050	1050	1050	1050	1050	1050
60	1050	1050	1050	1050	1050	1050	1050	1050	1050	1050	1050	1050	1050
50	1050	1050	1050	1050	1050	1050	1050	1050	1050	1050	1050	1050	1050

ALTITUDE (FEET ABOVE SEA LEVEL)

FUEL USAGE GUIDE:

This table shows the derate factor and full load set point timing required for a given fuel. Note that deration and set point timing reduction may be required as the methane number decreases. Methane number is a scale to measure detonation characteristics of various fuels. The methane number of a fuel is determined by using the Caterpillar methane number calculation program.

ALTITUDE DERATION FACTORS:

This table shows the deration required for various air inlet temperatures and altitudes. Use this information along with the fuel usage guide chart to help determine actual engine power for your site.

ACTUAL ENGINE RATING:

To determine the actual rating of the engine at site conditions, one must consider separately, limitations due to fuel characteristics and air system limitations. The Fuel Usage Guide deration establishes fuel limitations. The Altitude/Temperature deration factors and RPC (reference the Caterpillar Methane Program) establish air system limitations. RPC comes into play when the Altitude/Temperature deration is less than 1.0 (100%). Under this condition, add the two factors together. When the site conditions do not require an Altitude/Temperature derate (factor is 1.0), it is assumed the turbocharger has sufficient capability to overcome the low fuel relative power, and RPC is ignored. To determine the actual power available, take the lowest rating between 1) and 2).

1) Fuel Usage Guide Deration
2) 1-((1-Altitude/Temperature Deration) + (1-RPC))

AFTERCOOLER HEAT REJECTION FACTORS(ACHRF):

To maintain a constant air inlet manifold temperature, as the inlet air temperature goes up, so must the heat rejection. As altitude increases, the turbocharger must work harder to overcome the lower atmospheric pressure. This increases the amount of heat that must be removed from the inlet air by the aftercooler. Use the aftercooler heat rejection factor (ACHRF) to adjust for inlet air temp and altitude conditions. See notes 25 and 26 for application of this factor in calculating the heat exchanger sizing criteria. Failure to properly account for these factors could result in detonation and cause the engine to shutdown or fail.

MINIMUM SPEED CAPABILITY AT THE RATED SPEED'S SITE TORQUE (RPM):

This table shows the minimum allowable engine turndown speed where the engine will maintain the Rated Speed's Torque for the given ambient conditions.

NOTES:

1. Engine rating is with two engine driven water pumps. Tolerance is ± 3% of full load.
2. ISO 3046/1 engine efficiency tolerance is (+)0, (-)5% of full load % efficiency value. Nominal engine efficiency tolerance is ± 3.0% of full load % efficiency value.
3. ISO 3046/1 fuel consumption tolerance is (+)5, (-)0% of full load data. Nominal fuel consumption tolerance is ± 3.0% of full load data.
4. Air flow value is on a 'wet' basis. Flow is a nominal value with a tolerance of ± 6 %.
5. Inlet and Exhaust Restrictions must not exceed A&I limits based on full load flow rates from the standard technical data sheet.
6. Inlet manifold pressure is a nominal value with a tolerance of ± 6 %.
7. Inlet manifold temperature is a nominal value with a tolerance of ± 9°F.
8. Timing indicated is for use with the minimum fuel methane number specified. Consult the appropriate fuel usage guide for timing at other methane numbers.
9. Exhaust temperature is a nominal value with a tolerance of (+)63°F, (-)54°F.
10. Exhaust flow value is on a 'wet' basis. Flow is a nominal value with a tolerance of ± 6 %.
11. Emissions data is at engine exhaust flange prior to any after treatment.
12. NOx values are "Not to Exceed".
13. CO, CO2, THC, NMHC, NMNEHC, and HCHO values are "Not to Exceed" levels. THC, NMHC, and NMNEHC do not include aldehydes. An oxidation catalyst may be required to meet Federal, State or local CO or HC requirements.
14. VOCs - Volatile organic compounds as defined in US EPA 40 CFR 60, subpart JJJJ
15. Exhaust Oxygen tolerance is ± 0.5; Lambda tolerance is ± 0.05. Lambda and Exhaust Oxygen level are the result of adjusting the engine to operate at the specified NOx level.
16. LHV rate tolerance is ± 3.0%.
17. Heat rejection to jacket water value displayed includes heat to jacket water alone. Value is based on treated water. Tolerance is ± 10% of full load data.
18. Heat rejection to atmosphere based on treated water. Tolerance is ± 50% of full load data.
19. Lube oil heat rate based on treated water. Tolerance is ± 20% of full load data.
20. Exhaust heat rate based on treated water. Tolerance is ± 10% of full load data.
21. Heat rejection to exhaust (LHV to 77°F) value shown includes unburned fuel and is not intended to be used for sizing or recovery calculations.
22. Heat rejection to A/C - Stage 1 based on treated water. Tolerance is ±5% of full load data.
23. Heat rejection to A/C - Stage 2 based on treated water. Tolerance is ±5% of full load data.
24. Pump power includes engine driven jacket water and aftercooler water pumps. Engine brake power includes effects of pump power.
25. Total Jacket Water Circuit heat rejection is calculated as: (JW x 1.1) + (OC x 1.2) + (1AC x 1.05) + [0.95 x (1AC + 2AC) x (ACHRF - 1) x 1.05]. Heat exchanger sizing criterion is maximum circuit heat rejection at site conditions, with applied tolerances. A cooling system safety factor may be multiplied by the total circuit heat rejection to provide additional margin.
26. Total Second Stage Aftercooler Circuit heat rejection is calculated as: (2AC x 1.05) + [(1AC + 2AC) x 0.05 x (ACHRF - 1) x 1.05]. Heat exchanger sizing criterion is maximum circuit heat rejection at site conditions, with applied tolerances. A cooling system safety factor may be multiplied by the total circuit heat rejection to provide additional margin.

ENGINE POWER (bhp):	1340	COOLING SYSTEM:	JW+OC+1AC, 2AC
ENGINE SPEED (rpm):	1400		
EXHAUST MANIFOLD:	ASWC	JACKET WATER OUTLET (°F):	210

Free Field Mechanical and Exhaust Noise

SOUND PRESSURE LEVEL (dB)											
			Octave Band Center Frequency (OBCF)								
100% Load Data			dB(A)	63 Hz	125 Hz	250 Hz	500 Hz	1 kHz	2 kHz	4 kHz	8 kHz
Mechanical Sound	Distance from the Engine (ft)	3.3	98.1	93.8	95.3	91.5	90	93.1	92.8	88.8	83.2
		23.0	88.5	84.2	85.7	81.9	80.4	83.5	83.2	79.2	73.6
		49.2	83.2	78.9	80.4	76.6	75.1	78.2	77.9	73.9	68.3
Exhaust Sound	Distance from the Engine (ft)	3.3	113.5	102.9	105.5	109.5	105.6	106.9	106.6	107.1	104
		23.0	100.1	88.1	94.6	94.9	91.6	94.3	93.2	93.8	89.1
		49.2	93.5	81.5	87.9	88.2	84.9	87.6	86.6	87.2	82.5

SOUND PARAMETER DEFINITION:

Data Variability Statement:

Sound data presented by Caterpillar has been measured in accordance with ISO 6798 in a Grade 3 test environment. Measurements made inaccordance with ISO 6798 will result in some amount of uncertainty. The uncertainties depend not only on the accuracies with which sound pressurelevels and measurement surface areas are determined, but also on the 'near-field error' which increases for smaller measurement distances and lowerfrequencies. The uncertainty for a Grade 3 test environment, that has a source that produces sounds that are uniformly distributed in frequency over thefrequency range of interest, is equal to 4 dB (A-weighted). This uncertainty is expressed as the largest value of the standard deviation.

772 Airfie
Sheridan, WY 82801
Office: 307.673.0883 | Direct 307.675.5052
cdosborn@emittechnologies.com

Prepared For:
Ms. Jennifer Knowlton
Yates Petroleum

INFORMATION PROVIDED BY CATERPILLAR

Engine:	G3516B
Horsepower:	1380
RPM:	1400
Compression Ratio:	8.0:1
Exhaust Flow Rate:	9126 ft³/min
Exhaust Temperature:	992 °F
Reference:	DM8800-04
Fuel:	Natural Gas
Annual Operating Hours:	8760

Uncontrolled Emissions Data

NO_x:	0.50	g/bhp-hr
CO:	2.43	g/bhp-hr
THC:	4.77	g/bhp-hr
NMHC:	0.72	g/bhp-hr
NMNEHC:	0.48	g/bhp-hr
HCHO:	0.44	g/bhp-hr
Oxygen:	9.00	%

POST CATALYST EMISSIONS

NO_x:	Unaffected by Oxidation Catalyst	
CO:	>93%	reduction
VOC:	>50%	reduction
HCHO:	>84%	reduction

CONTROL EQUIPMENT

Catalytic Converter

Model:	**EAH-3050Z-1616F-21XEE**
Catalyst Type:	Oxidation, Precious group metals
Manufacturer:	EMIT Technologies, Inc.
Element Size:	30.5" x 3.5"
Catalyst Elements:	1
Housing Type:	2 Element Capacity
Catalyst Installation:	Accessible Housing
Construction:	10 gauge Steel
Sample Ports:	6 (0.5" NPT)
Inlet Connections:	16" Flat Face Flange
Outlet Connections:	16" Flat Face Flange
Configuration:	End In / End Out
Silencer:	Integrated
Silencer Grade:	Hospital
Insertion Loss:	35-40 dBA

772 Airfie' ne
Sheridan, WY 82801
Office: 307.673.0883 | Direct 307.675.5052
cdosborn@emittechnologies.com

WARRANTY

EMIT Technologies,Inc. warrants that the goods supplied will be free from defects in workmanship by EMIT Technologies, Inc. for a period of one (1) year from date of shipment. EMIT Technologies, Inc. will not be responsible for any defects which result from improper use, neglect, failure to properly maintain or which are attributable to defects, errors or omissions in any drawings, specifications, plans or descriptions, whether written or oral, supplied to EMIT Technologies, Inc. by Buyer.

Catalyst performance will be guaranteed for a period of 1 year from installation, or 8760 operating hours, whichever comes first. The catalyst shall be operated with an automatic air/fuel ratio controller. The performance guarantee shall not cover the effects of excessive ash masking due to operation at low load, improper engine maintenance, or inappropriate lubrication oil. The performance guarantee shall not cover the effects of continuous engine misfires (cylinder or ignition) exposing the catalyst to excessive exothermic reaction temperatures.

The exhaust temperature operating range at the converter inlet is 600°F minimum for oxidation catalyst and 750 °F for NSCR catalyst and 1250°F maximum.

If a high temperature shut down switch is not installed, thermal deactivation of catalyst at temperatures above 1300 °F is not covered.

The catalyst conversion efficiencies (% reduction) will be guaranteed for engine loads of 50 to 100 percent.

Engine lubrication oil shall contain less than 0.6% ash (by weight) with a maximum allowable specific oil consumption of 0.01 gal/bhp-hr. The maximum ash loading on the catalyst shall be limited to 350 g/m3. Phosphorous and zinc additives are limited to 0.03% (by weight).

The catalyst must not be exposed to the following know poisoning agents, including: iron, nickel, sodium, chromium, arsenic, zinc, lead, phosphorous, silicon, potassium, magnesium, copper, tin, and mercury. Total poison concentrations in the gas are limited to 0.3 ppm.

Rowdy Pipeline, L.L.C.

P.O. Box 2560
Gillette, WY 82717
(307) 682-4638

408 Frontage Road
Gillette, WY 82716
Fax: (307) 682-4641

Attachment B

G3516

GAS COMPRESSION APPLICATION

GAS ENGINE SITE SPECIFIC TECHNICAL DATA
Pine Tree Compressor Station

CATERPILLAR®

ENGINE SPEED (rpm):	1400
COMPRESSION RATIO:	8:1
AFTERCOOLER TYPE:	SCAC
AFTERCOOLER - STAGE 2 INLET (°F):	130
AFTERCOOLER - STAGE 1 INLET (°F):	201
JACKET WATER OUTLET (°F):	210
ASPIRATION:	TA
COOLING SYSTEM:	JW+OC+1AC, 2AC
CONTROL SYSTEM:	ADEM3
EXHAUST MANIFOLD:	ASWC
COMBUSTION:	LOW EMISSION
NOx EMISSION LEVEL (g/bhp-hr NOx):	0.5
SET POINT TIMING:	24

RATING STRATEGY:	LOW NOX UPGRADE
RATING LEVEL:	CONTINUOUS
FUEL SYSTEM:	HPG IMPCO WITH AIR FUEL RATIO CONTROL
SITE CONDITIONS:	
FUEL:	TCGS fuel 3
FUEL PRESSURE RANGE(psig):	40.0-45.0
FUEL METHANE NUMBER:	28.0
FUEL LHV (Btu/scf):	1195
ALTITUDE(ft):	5000
MAXIMUM INLET AIR TEMPERATURE(°F):	77
STANDARD RATED POWER:	1340 bhp@1400rpm

RATING		NOTES	LOAD	MAXIMUM RATING 100%	SITE RATING AT MAXIMUM INLET AIR TEMPERATURE 100%	75%	61%
ENGINE POWER	(WITHOUT FAN)	(1)	bhp	1099	1099	824	670
INLET AIR TEMPERATURE			°F	77	77	77	77
ENGINE DATA							
FUEL CONSUMPTION (LHV)		(2)	Btu/bhp-hr	8973	8973	9348	9564
FUEL CONSUMPTION (HHV)		(2)	Btu/bhp-hr	9877	9877	10291	10528
AIR FLOW (@inlet air temp, 14.7 psia)	(WET)	(3)(4)	ft3/min	2688	2688	2086	1704
AIR FLOW	(WET)	(3)(4)	lb/hr	11919	11919	9251	7554
FUEL FLOW (60°F, 14.7 psia)			scfm	137	137	107	89
INLET MANIFOLD PRESSURE		(5)	In Hg(abs)	62.0	62.0	50.7	41.8
EXHAUST TEMPERATURE - ENGINE OUTLET		(6)	°F	1026	1026	1031	1032
EXHAUST GAS FLOW (@engine outlet temp, 14.5 psia)	(WET)	(7)(4)	ft3/min	8026	8026	6254	5118
EXHAUST GAS MASS FLOW	(WET)	(7)(4)	lb/hr	12413	12413	9637	7876
EMISSIONS DATA - ENGINE OUT							
NOx (as NO2)		(8)(9)	g/bhp-hr	0.50	0.50	0.50	0.50
CO		(8)(9)	g/bhp-hr	4.76	4.76	4.80	4.73
THC (mol. wt. of 15.84)		(8)(9)	g/bhp-hr	2.52	2.52	2.76	2.84
NMHC (mol. wt. of 15.84)		(8)(9)	g/bhp-hr	1.07	1.07	1.18	1.20
NMNEHC (VOCs) (mol. wt. of 15.84)		(8)(9)(10)	g/bhp-hr	1.07	1.07	1.18	1.20
HCHO (Formaldehyde)		(8)(9)	g/bhp-hr	0.21	0.21	0.41	0.43
CO2		(8)(9)	g/bhp-hr	646	646	669	676
EXHAUST OXYGEN		(8)(11)	% DRY	7.9	7.9	7.8	7.6
HEAT REJECTION							
HEAT REJ. TO JACKET WATER (JW)		(12)	Btu/min	43693	43693	36506	32190
HEAT REJ. TO ATMOSPHERE		(12)	Btu/min	4676	4676	3950	3543
HEAT REJ. TO LUBE OIL (OC)		(12)	Btu/min	6516	6516	6444	4802
HEAT REJ. TO A/C - STAGE 1 (1AC)		(12)(13)	Btu/min	7015	7015	3389	1335
HEAT REJ. TO A/C - STAGE 2 (2AC)		(12)(13)	Btu/min	3734	3734	2931	2384
COOLING SYSTEM SIZING CRITERIA							
TOTAL JACKET WATER CIRCUIT (JW+OC+1AC)		(13)(14)	Btu/min	63247			
TOTAL AFTERCOOLER CIRCUIT (2AC)		(13)(14)	Btu/min	3920			
A cooling system safety factor of 0% has been added to the cooling system sizing criteria.							

CONDITIONS AND DEFINITIONS

Engine rating obtained and presented in accordance with ISO 3046/1, adjusted for fuel, site altitude and site inlet air temperature. 100% rating at maximum inlet air temperature is the maximum engine capability for the specified fuel at site altitude and maximum site inlet air temperature. Maximum rating is the maximum capability at the specified aftercooler inlet temperature for the specified fuel at site altitude and reduced inlet air temperature. Lowest load point is the lowest continuous duty operating load allowed. No overload permitted at rating shown.

For notes information consult page three.

PREPARED BY: Jeff Eichman, Compliance Partners
Data generated by Gas Engine Rating Pro Version 5.03.00
Ref. Data Set DM9400-02-001. Printed 02Jun2015

Engine Power vs. Inlet Air Temperature

Data represents temperature sweep at 5000 ft and 1400 rpm

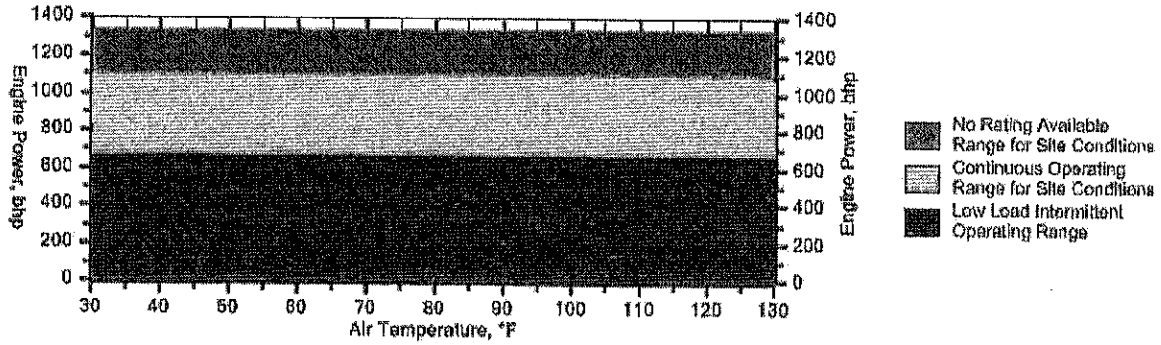

Engine Power vs. Engine Speed

Data represents speed sweep at 5000 ft and 77 °F

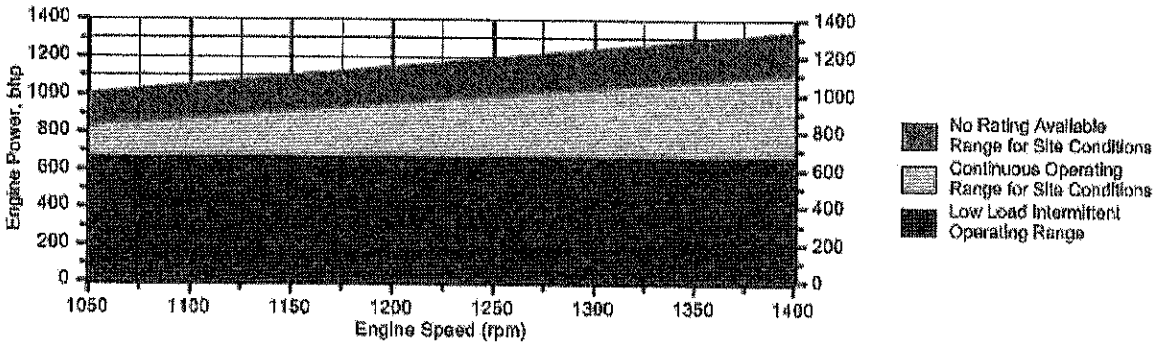

Engine Torque vs. Engine Speed

Data represents speed sweep at 5000 ft and 77 °F

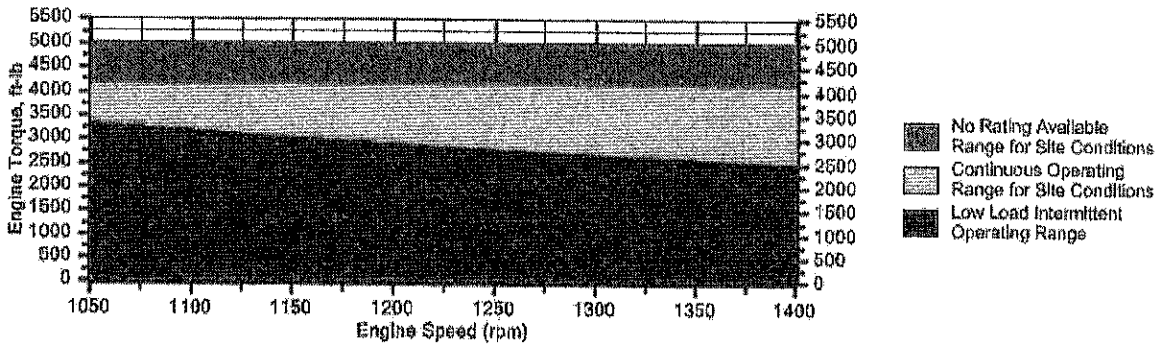

Note: At site conditions of 5000 ft and 77°F inlet air temp., constant torque can be maintained down to 1245 rpm. The minimum speed for loading at these conditions is 1050 rpm.

NOTES

1. Engine rating is with two engine driven water pumps. Tolerance is ± 3% of full load.

2. Fuel consumption tolerance is ± 3.0% of full load data.

3. Air flow value is on a 'wet' basis. Flow is a nominal value with a tolerance of ± 5 %.

4. Inlet and Exhaust Restrictions must not exceed A&I limits based on full load flow rates from the standard technical data sheet.

5. Inlet manifold pressure is a nominal value with a tolerance of ± 5 %.

6. Exhaust temperature is a nominal value with a tolerance of (+)63°F, (-)54°F.

7. Exhaust flow value is on a "wet" basis. Flow is a nominal value with a tolerance of ± 6 %.

8. Emissions data is at engine exhaust flange prior to any after treatment.

9. Emission values are based on engine operating at steady state conditions. Fuel methane number cannot vary more than ± 3. Values listed are higher than nominal levels to allow for instrumentation, measurement, and engine-to-engine variations. They indicate "Not to Exceed" values. THC, NMHC, and NMNEHC do not include aldehydes. An oxidation catalyst may be required to meet Federal, State or local CO or HC requirements.

10. VOCs - Volatile organic compounds as defined in US EPA 40 CFR 60, subpart JJJJ

11. Exhaust Oxygen level is the result of adjusting the engine to operate at the specified NOx level. Tolerance is ± 0.5.

12. Heat rejection values are nominal. Tolerances, based on treated water, are ± 10% for jacket water circuit, ± 50% for radiation, ± 20% for lube oil circuit, and ± 5% for aftercooler circuit.

13. Aftercooler heat rejection includes an aftercooler heat rejection factor for the site elevation and intel air temperature specified. Aftercooler heat rejection values at part load are for reference only. Do not use part load data for heat exchanger sizing.

14. Cooling system sizing criteria are maximum circuit heat rejection for the site, with applied tolerances.

Constituent	Abbrev	Mole %	Norm
Water Vapor	H2O	0.0000	0.0000
Methane	CH4	81.0000	81.2136
Ethane	C2H6	0.0000	0.0000
Propane	C3H8	8.0000	8.0211
Isobutane	iso-C4H1O	1.3120	1.3155
Norbutane	nor-C4H1O	3.8710	3.8812
Isopentane	iso-C5H12	0.8910	0.8934
Norpentane	nor-C5H12	0.9140	0.9164
Hexane	C6H14	0.5560	0.5575
Heptane	C7H16	0.3270	0.3279
Nitrogen	N2	1.1240	1.1270
Carbon Dioxide	CO2	1.7180	1.7225
Hydrogen Sulfide	H2S	0.0000	0.0000
Carbon Monoxide	CO	0.0000	0.0000
Hydrogen	H2	0.0000	0.0000
Oxygen	O2	0.0000	0.0000
Helium	HE	0.0000	0.0000
Neopentane	neo-C5H12	0.0000	0.0000
Octane	C8H18	0.0240	0.0241
Nonane	C9H20	0.0000	0.0000
Ethylene	C2H4	0.0000	0.0000
Propylene	C3H6	0.0000	0.0000
TOTAL (Volume %)		99.7370	100.0000

Fuel Makeup:	TCGS fuel 3
Unit of Measure:	English

Calculated Fuel Properties

Caterpillar Methane Number:	28.0
Lower Heating Value (Btu/scf):	1195
Higher Heating Value (Btu/scf):	1316
WOBBE Index (Btu/scf):	1347
THC: Free Inert Ratio:	34.09
Total % Inerts (% N2, CO2, He):	2.85%
RPC (%) (To 905 Btu/scf Fuel):	100%
Compressibility Factor:	0.996
Stoich A/F Ratio (Vol/Vol):	12.39
Stoich A/F Ratio (Mass/Mass):	15.73
Specific Gravity (Relative to Air):	0.787
Specific Heat Constant (K):	1.283

CONDITIONS AND DEFINITIONS

Caterpillar Methane Number represents the knock resistance of a gaseous fuel. It should be used with the Caterpillar Fuel Usage Guide for the engine and rating to determine the rating for the fuel specified. A Fuel Usage Guide for each rating is included on page 2 of its standard technical data sheet.

RPC always applies to naturally aspirated (NA) engines, and turbocharged (TA or LE) engines only when they are derated for altitude and ambient site conditions.

Project specific technical data sheets generated by the Caterpillar Gas Engine Rating Pro program take the Caterpillar Methane Number and RPC into account when generating a site rating.

Fuel properties for Btu/scf calculations are at 60F and 14.696 psia.

Caterpillar shall have no liability in law or equity, for damages, consequently or otherwise, arising from use of program and related material or any part thereof.

FUEL LIQUIDS

Field gases, well head gases, and associated gases typically contain liquid water and heavy hydrocarbons entrained in the gas. To prevent detonation and severe damage to the engine, hydrocarbon liquids must not be allowed to enter the engine fuel system. To remove liquids, a liquid separator and coalescing filter are recommended, with an automatic drain and collection tank to prevent contamination of the ground in accordance with local codes and standards.

To avoid water condensation in the engine or fuel lines, limit the relative humidity of water in the fuel to 80% at the minimum fuel operating temperature.

PREPARED BY: Jeff Eichman, Compliance Partners
Data generated by Gas Engine Rating Pro Version 5.03.00
Ref. Data Set DM9400-02-001, Printed 02Jun2015

Rowdy Pipeline, L.L.C.

P.O. Box 2560
Gillette, WY 82717
(307) 682-4638

408 Frontage Road
Gillette, WY 82716
(307) 682-4641 FAX

RECEIVED
APR 11 2015
AIR QUALITY DIVISION

April 10, 2015

Nathan Henschel, Air Quality Scientist

Wyoming Department of Environmental Quality

Air Quality Division

122 West 25th Street

Cheyenne, WY 82002

RE: NSR Application A0000492

Mr. Henschel,

In January of 2015 Rowdy Pipeline submitted an application to modify the Uprising Compressor Station (MD-12882). The application was processed into the New Source Review system under application number A0000492. Rowdy pipeline would like to submit this letter and accompanying documents as an addendum to application A0000492.

The purpose of the addendum is to request flexibility in the engine configuration at the Uprising Compressor Station. The original scope of application A0000492 did not include modification of the station's engines, but after further consideration Rowdy has determined that is necessary to modify the current engine configuration.

Currently, Rowdy is permitted to operate three (3) Caterpillar G3516B engines at this location as units E5-E7. Rowdy is requesting the option to install either a Caterpillar G3516B or Caterpillar G3516LEU, for each of the units E5-E7.

The Caterpillar G3516LEU is a lower horsepower, lower emitting variant of the Caterpillar G3516, as compared to the G3516B and G3516ULB models. Emissions calculations for this unit are based on manufacturer provided emission factors for NOx, Co and VOC. Emission factors for additional pollutants are from Table 3.2-2 of Ap-42. Greenhouse gas emissions have been quantified using emission factors from 40 CFR 98 Subpart C. Emissions for a Caterpillar G3516LEU are summarized in Table 1, while Caterpillar G3516B emissions are summarized in Table 2.

Rowdy Pipeline, L.L.C.

P.O. Box 2560
Gillette, WY 82717
(307) 682-4638

408 Frontage Road
Gillette, WY 82716
(307) 682-4641 FAX

Table 1: Caterpillar G3516LEU

Source ID	E5-E7	Engine rating	1340	BHP
Source Description	4-Stroke Lean Burn	Fuel HHV	1554.76	Btu/scf
Engine Make	Caterpillar	Heat Rate	9.8	MMBtu/hr
Engine Model	G3516LEU	Engine Heat Rate	7301	Btu/hp-hr
Serial Number	TBD	Hours of Operation	8760	hr/year
Manufacture Date	TBD	Potential Fuel Usage	6293	scf/hr
Emission Controls	Oxidation Catalyst		55.1	MMscf/yr

PTE Emissions

Species	Emission Factor		Estimated Emissions		Source of emission Factor
	lb/MMBtu	g/hp-hr	lb/hr	ton/yr	
NO_X	0.151	0.500	1.48	6.470	manufacturer
CO	0.075	0.250	0.74	3.235	manufacturer
VOC	0.106	0.350	1.03	4.529	manufacturer
SO_X	0.001	0.002	0.01	0.025	AP 42 Table 3.2-2
PM_{10}[1]	0.0100	0.033	0.10	0.428	AP 42 Table 3.2-2
$PM_{2.5}$[1]	0.0100	0.033	0.10	0.428	AP 42 Table 3.2-2
HCOH	0.021	0.070	0.21	0.906	WDEQ BACT
n-Hexane	0.001	0.004	0.01	0.048	AP 42 Table 3.2-2
Benzene	0.000	0.001	0.00	0.019	AP 42 Table 3.2-2
Toluene	0.000	0.001	0.00	0.017	AP 42 Table 3.2-2
Acrolein	0.005	0.017	0.05	0.220	AP 42 Table 3.2-2
Acetaldehyde	0.008	0.028	0.08	0.358	AP 42 Table 3.2-2

Green House Gas Emissions

Species	Emission Factor		Estimated Emissions		Source of emission Factor
	Kg/MMBtu	g/hp-hr	lb/hr	ton/yr	
CO_2	53.06	387.4	1144.43	5012.59	40 CFR Part 98, Subpart C Tables C-1 & C-2
CH_4	0.001	0.007	0.02	0.09	
N_2O	0.0001	0.0007	0.002	0.009	
CO_2e	--	--	1145.61	5017.77	

[1] PM_{10} and $PM_{2.5}$ emission factors include PM condensable emission factor (PM_{10} EF + PM_{cond} EF = presented EF)

Rowdy Pipeline, L.L.C.

P.O. Box 2560
Gillette, WY 82717
(307) 682-4638

408 Frontage Road
Gillette, WY 82716
(307) 682-4641 FAX

Table 2: Caterpillar G3516B/ULB Emissions

Source ID	E5-E7	Engine rating	1380	BHP
Source Description	4-Stroke Lean Burn	Fuel HHV	1554.76	Btu/scf
Engine Make	Caterpillar	Heat Rate	10.1	MMBtu/hr
Engine Model	G3516ULB	Engine Heat Rate	7301	Btu/hp-hr
Serial Number	TBD	Hours of Operation	8760	hr/year
Manufacture Date	TBD	Potential Fuel Usage	6480	scf/hr
Emission Controls	Oxidation Catalyst		56.8	MMscf/yr

PTE Emissions

Species	Emission Factor		Estimated Emissions		Source of emission Factor
	lb/MMBtu	g/hp-hr	lb/hr	ton/yr	
NO_X	0.151	0.500	1.52	6.66	manufacturer
CO	0.151	0.500	1.52	6.66	WDEQ BACT
VOC	0.211	0.700	2.13	9.33	WDEQ BACT
SO_X	0.001	0.002	0.01	0.03	AP 42 Table 3.2-2
PM_{10}[1]	0.010	0.033	0.10	0.4407	AP 42 Table 3.2-2
$PM_{2.5}$[1]	0.010	0.033	0.10	0.4407	AP 42 Table 3.2-2
HCOH	0.021	0.070	0.21	0.9328	WDEQ BACT
n-Hexane	0.001	0.004	0.01	0.0490	AP 42 Table 3.2-2
Benzene	0.000	0.001	0.00	0.0194	AP 42 Table 3.2-2
Toluene	0.000	0.001	0.00	0.0180	AP 42 Table 3.2-2
Acrolein	0.005	0.017	0.05	0.2268	AP 42 Table 3.2-2
Acetaldehyde	0.008	0.028	0.08	0.3689	AP 42 Table 3.2-2

Green House Gas Emissions

Species	Emission Factor		Estimated Emissions		Source of emission Factor
	Kg/MMBtu	g/hp-hr	lb/hr	ton/yr	
CO_2	53.06	387.4	1178.59	5162.22	40 CFR Part 98, Subpart C Tables C-1 & C-2
CH_4	0.001	0.007	0.02	0.10	
N_2O	0.0001	0.0007	0.002	0.010	
CO_2e	--	--	1179.81	5167.55	

[1] PM_{10} and $PM_{2.5}$ emission factors include PM condensable emission factor (PM_{10} EF + PM_{cond} EF = presented EF)

Rowdy Pipeline, L.L.C.

P.O. Box 2560
Gillette, WY 82717
(307) 682-4638

408 Frontage Road
Gillette, WY 82716
(307) 682-4641 FAX

Attached with this letter I have attached the following IMPACT forms:

1. Signed Cover Sheet
2. Engine Emission Sheet for the currently permitted Caterpillar G3516B engines
3. Engine Sheet and Engine Emissions Sheet for the newly proposed Caterpillar G3516LEU engines.
4. Updated Release Point Information Sheet

Please contact us with any questions, comments, and concerns.

Respectfully,

Kerry Egan

Engineering Technician

Office: (575) 748-4469

Cell: (575) 513-8988

KEgan@agaveenergy.com

Release Point Information:

Complete the table below for ***each*** release point. Please include release point information for each emission unit. Multiple attachments may be necessary. A release point is a point at which emissions from an emission unit are released into the ambient (outside)air. List each individual release point on a separate pair of lines (release point ID and description). ***For longitude and latitude, use NAD 83/WGS84 datum and 5 digits after the decimal (i.e. 41.12345, -107.56789)***

Stack Release Point Information		
Company Release Point ID:	Release Point Type:	Vertical
E5	Release Point Latitude:	43.578775
	Release Point Longitude:	-105.511325
Company Release Point Description:	Base Elevation (ft):	4930
	Stack Height (ft):	22.5
	Stack Diameter (ft):	1
Caterpillar G3516B or G3516LEU	Exit Gas Velocity (ft/s):	102.45
	Exit Gas Temp (F):	952
	Exit Gas Flow Rate (acfm):	4828
Company Release Point ID:	Release Point Type:	Vertical
E6	Release Point Latitude:	43.578731
	Release Point Longitude:	-105.511127
Company Release Point Description:	Base Elevation (ft):	4930
	Stack Height (ft):	22.5
	Stack Diameter (ft):	1
Caterpillar G3516B or G3516LEU	Exit Gas Velocity (ft/s):	102.45
	Exit Gas Temp (F):	952
	Exit Gas Flow Rate (acfm):	4828
Company Release Point ID:	Release Point Type:	Vertical
E7	Release Point Latitude:	43.578695
	Release Point Longitude:	-105.510953
Company Release Point Description:	Base Elevation (ft):	4930
	Stack Height (ft):	22.5
	Stack Diameter (ft):	1
Caterpillar G3516B or G3516LEU	Exit Gas Velocity (ft/s):	102.45
	Exit Gas Temp (F):	952
	Exit Gas Flow Rate (acfm):	4828
Company Release Point ID:	Release Point Type:	
	Release Point Latitude:	
	Release Point Longitude:	
Company Release Point Description:	Base Elevation (ft):	
	Stack Height (ft):	
	Stack Diameter (ft):	
	Exit Gas Velocity (ft/s):	
	Exit Gas Temp (F):	
	Exit Gas Flow Rate (acfm):	

Complete the table below for each fugitive (area, volume, line) release point. List each individual release point on a separate line.

Fugitive Release Point Information	
Company Release Point ID:	Release Point Latitude:
	Release Point Longitude:
	Release Height (ft):
Company Release Point Description:	
Company Release Point ID:	Release Point Latitude:
	Release Point Longitude:
	Release Height (ft):
Company Release Point Description:	
Company Release Point ID:	Release Point Latitude:
	Release Point Longitude:
	Release Height (ft):
Company Release Point Description:	
Company Release Point ID:	Release Point Latitude:
	Release Point Longitude:
	Release Height (ft):
Company Release Point Description:	

Revised 11/3/2014

WYOMING

Department of Environmental Quality Air Quality Division

Permit Application Form

Is this a revision to an existing application?

Yes X No

Previous Application #:

Date of Application: 4/10/2015

COMPANY INFORMATION:

Company Name: Rowdy Pipeline, LLC

Address: 326 West Quay Street

City: Artesia State: New Mexico Zip Code: 88210

Country: USA Phone Number:

FACILITY INFORMATION:

Facility Name: Uprising Compressor Station

New Facility or Existing Facility: Existing

Facility Description: Compressor Station

Facility Class: Synthetic Minor Operating Status: Operating

Facility Type: Compressor Station

For Oil & Gas Production Sites ONLY:

First Date of Production (FDOP)/Date of Modification:

Does production at this facility contain H2S?*

If yes, contact the Division.

API Number(s):

NAICS Code: 486210 Pipeline Transportation of Natural Gas

FACILITY LOCATION:

***Enter the facility location in either the latitude/longitude area or section/township/range area. Both are not required.**

Physical Address:

City: Zip Code:

State: WY County:

OR

Latitude: 43.578478 N Longitude: 105.510846 W County: Campbell

Quarter Quarter: SW Quarter: SE

Section: 28 Township: 42N Range: 72W

For longitude and latitude, use NAD 83/WGS84 datum and 5 digits after the decimal (i.e. 41.12345, -107.56789)

CONTACT INFORMATION:

***Note that an Environmental AND NSR Permitting Contact is required for your application to be deemed complete by the agency.**

Title: Mr. First Name: Kerry

Last Name: Egan

Company Name: Rowdy Pipeline, LLC

Job Title: Engineering Technician

Address: 326 West Quay Street

City: Astesia State: New Mexico

Zip Code: 88210

Primary Phone No.: 575-748-4555 E-mail: KEgan@agaveenergy.com

Mobile Phone No.: 575-513-8988 Fax No.:

Contact Type: Environmental contact Start Date:

Revised 11/3/2014

Additional Contact Type (if needed): NSR Permitting contact

Title: Mr. First Name: Kerry

Last Name: Egan

Company Name: Rowdy Pipeline, LLC

Job Title: Engineering Technician

Address: 326 West Quay Street

City: Artesia State: New Mexico

Zip Code: 88210

Primary Phone No.: 575-748-4555 E-mail: KEgan@agaveenergy.com

Mobile Phone No.: 575-513-8988 Fax No.:

Contact Type: NSR Permitting contact Start Date:

FACILITY APPLICATION INFORMATION:

General Info:

Has the facility changed location or is it a new/ greenfield facility?	No
Has a Land Use Planning document been included in this application?	No
Is the facility located in a sage grouse core area?*	No
If the facility is in a sage grouse core area, what is the WER number?	

** For questions about sage grouse core area, contact WY Game & Fish Department.*

Federal Rules Applicability - Facility Level:

Prevention of Significant Deterioration (PSD):	No
Non-Attainment New Source Review:	No

Modeling Section:

Has the Air Quality Division been contacted to determine if modeling is required?	Yes
Is a modeling analysis part of this application?	No
Is the proposed project subject to Prevention of Significant Deterioration (PSD) requirements?	No
Has the Air Quality Division been notified to schedule a pre-application meeting?	No
Has a modeling protocol been submitted to and approved by the Air Quality Division?	No
Has the Air Quality Division received a Q/D analysis to submit to the respective FLMs to determine the need for an AQRV analysis?	No

Required Attachments:

- Facility Map ☐
- Process Flow Diagram ☐
- Modeling Analysis (if applicable) ☐
- Land Use Planning Document ☐
- Detailed Project Description ☑
- Emissions Calculations ☑

I, Kerry Egan (Responsible Official (Printed Name)) Engineering Technician (Title)

an Official Representative of the Company, state that I have knowledge of the facts herein set forth and that the same are true and correct to the best of my knowledge and belief. I further certify that the operational information provided and emission rates listed on this application reflect the anticipated emissions due to the operation of this facility. The facility will operate in compliance with all applicable Wyoming Air Quality Standards and Regulations.

Signature: Kerry Egan (ink) Date: 4/10/15

Specific Emission Unit Attributes:

Engine

Company Equipment ID: E5-E7
Company Equipment Description: Catterpillar G3516LEU

Operating Status: Not Yet Installed
Initial Construction Commencement Date: TBD
Initial Operation Commencement Date: TBD
Most Recent Construction/ Modification Commencement Date: TBD

Most Recent Operation Commencement Date: TBD

Select reason(s) for this emissions unit being included in this application (must be completed regardless of date of installation or modification):

Reason: Modification

If reason is ***Reconstruction*** or ***Temporary Permit*** or ***Other,*** please explain below:

Name Plate Rating: 1340 Units: hp
Site Rating: ~1340 Units: hp
Primary Fuel Type: Field Gas
Secondary Fuel Type:
Model Name and Number: G3516LEU
Engine Type: 4 Stroke Lean Burn
Serial Number Tracking Table:
Serial Number: TBD Order Date: TBD
Manufacturer Name: Caterpillar
Construction/Installation Commencement Date: TBD
Operation Commencement/ Start-up Date: TBD
Manufacture Date: TBD
Btu Content: 1554 Units: BTU/scf
Fuel Sulfur Content: < 4 Units: ppm
Type of Service: Compression

SCC Codes: List all Source Classification Code(s) (SCC) that describe the process(es) performed by the emission source (e.g., 1-02-002-04).

20200253

Potential Operating Schedule: Provide the operating schedule for this emission unit.

Hours/day: 24
Hours/year: 8760

Control Equipment: Yes

If yes, please fill out and attach the appropriate Control Device and Release Point Information worksheets.

Best Available Control Technology (BACT): Was a BACT Analysis completed for this emission unit?

☐ Yes ☑ No

Pollutant: _____

Proposed BACT: _____

*If yes, attach BACT Analysis with this application.

Lowest Achievable Emission Rate (LAER): Was a LAER Analysis completed for this emission unit?

☐ Yes ☑ No

Pollutant: _____

Proposed LAER: _____

*If yes, attach LAER Analysis with this application.

Federal and State Rule Applicability:

New Source Performance Standards (NSPS): **Subject to subpart**

New Source Performance Standard are listed under 40 CFR 60-Standards of Performance for New Stationary Sources.

NSPS Subpart: ***Subpart JJJJ depending on engine manufacture/purchase date***

National Emission Standards for Hazardous Air Pollutants (NESHAP Part 61): **Not Affected**

National Emissions Standards for Hazardous Air Pollutants (NESHAP Part 61) are listed under 40 CFR 61. (These include asbestos, benzene, beryllium, mercury, and vinyl chloride).

Part 61 NESHAP Subpart: _____

National Emission Standards for Hazardous Air Pollutants (NESHAP Part 63): **Subject to subpart**

National Emission Standards for Hazardous Air Pollutants (NESHAP Part 63) standards are listed under 40 CFR 63

Part 63 NESHAP Subpart: **Subpart ZZZZ depending on engine manufacture/purchase date**

Prevention of Significant Deterioration (PSD): **Not Affected**

These rules are found under WAQSR Chapter 6, Section 4.

Non-Attainment New Source Review: **Not Affected**

These rules are found under WAQSR Chapter 6, Section 13.

Emissions Information- The following tables request information needed to determine the applicable requirements and the compliance status of this emission unit with those requirements.

Criteria Pollutants:

Caterpillar G3516B

		Pre-Controlled Potential Emissions (tons/yr)	Efficiency Standards: Potential to Emit (PTE)	Efficiency Standards: Units	Potential to Emit (lbs/hr)	Potential to Emit (tons/yr)	Basis for Determination
1.)	Particulate emissions (PE/PM) (formerly particulate matter, PM)	0.44	0.033	gr/hp-hr	0.1	0.44	AP-42
2.)	PM #10 microns in diameter (PE/PM10)	0.44	0.033	gr/hp-hr	0.1	0.44	AP-42
3.)	PM #2.5 microns in diameter (PE/PM2.5)	0.44	0.033	gr/hp-hr	0.1	0.44	AP-42
4.)	Sulfur dioxide (SO2)	0.03	0.002	gr/hp-hr	0.01	0.03	AP-42
5.)	Nitrogen Oxides (NOx)	6.66	0.5	gr/hp-hr	1.52	6.66	Manufacturer Data
6.)	Carbon monoxide (CO)	6.66	0.5	gr/hp-hr	1.52	6.66	Manufacturer Data
7.)	Volatile organic compounds (VOC)	9.3	0.7	gr/hp-hr	2.13	9.3	Manufacturer Data
8.)	Lead (Pb)	--	--		--	--	
9.)	Total Hazardous Air Pollutants (HAPs)	1.615	0.121	gr/hp-hr	0.37	1.615	AP-42
10.)	Fluoride (F)						
11.)	Hydrogen Sulfide (H2S)						
12.)	Mercury (Hg)						
13.)	Total Reduced Sulfur (TRS)						
14.)	Sulfuric Acid Mist (SAM)						

Provide your calculations as an attachment and explain how all process variables and emissions factors were selected.

Hazardous Air Pollutants (HAPs) and Toxic Air Contaminents

Pollutants:

		Pre-Controlled Potential Emissions (tons/yr)	Efficiency Standards: Potential to Emit (PTE)	Efficiency Standards: Units	Potential to Emit (lbs/hr)	Potential to Emit (tons/yr)	Basis for Determination
1.)	n-hexane	0.049	0.004	gr/hp-hr	0.011187	0.049	AP-42
2.)	Benzene	0.0194	0.002	gr/hp-hr	0.004429	0.0194	AP-42
3.)	Toluene	0.018	0.002	gr/hp-hr	0.00411	0.018	AP-42
4.)	Acrolein	0.2268	0.019	gr/hp-hr	0.051781	0.2268	AP-42
5.)	Acetaldehyde	0.3689	0.031	gr/hp-hr	0.084224	0.3689	AP-42
6.)	HCOH	0.906	0.07	gr/hp-hr	0.207	0.9328	Manufacturer Data
7.)							
8.)							

Greenhouse Gases (GHGs)

Pollutants:		Pre-Controlled Potential Emissions (tons/yr)	Efficiency Standards: Potential to Emit (PTE)	Efficiency Standards: Units	Potential to Emit (lbs/hr)	Potential to Emit (tons/yr)	Basis for Determination
1.)	Carbon Dioxide	5162.22	387.4	gr/hp-hr	1178.59	5162.22	Other
2.)	Methane	0.1	0.007	gr/hp-hr	0.02	0.1	Other
3.)	Nitrous Oxide	0.01	0.0007	gr/hp-hr	0.002	0.01	Other
4.)	CO_2e	5167.55			1179.81	5167.55	Other
5.)							
6.)							
7.)							
8.)							

Emissions Information- The following tables request information needed to determine the applicable requirements and the compliance status of this emission unit with those requirements.

Criteria Pollutants:

Caterpillar G3516LEU

		Pre-Controlled Potential Emissions (tons/yr)	Efficiency Standards: Potential to Emit (PTE)	Efficiency Standards: Units	Potential to Emit (lbs/hr)	Potential to Emit (tons/yr)	Basis for Determination
1.)	Particulate emissions (PE/PM) (formerly particulate matter, PM)	0.428	0.033	gr/hp-hr	0.1	0.428	AP-42
2.)	PM #10 microns in diameter (PE/PM10)	0.428	0.033	gr/hp-hr	0.1	0.428	AP-42
3.)	PM #2.5 microns in diameter (PE/PM2.5)	0.428	0.033	gr/hp-hr	0.1	0.428	AP-42
4.)	Sulfur dioxide (SO2)	0.029	0.002	gr/hp-hr	0.01	0.025	AP-42
5.)	Nitrogen Oxides (NOx)	6.47	0.5	gr/hp-hr	1.48	6.47	Manufacturer Data
6.)	Carbon monoxide (CO)	3.24	0.25	gr/hp-hr	0.74	3.24	Manufacturer Data
7.)	Volatile organic compounds (VOC)	4.5	0.35	gr/hp-hr	1.1	4.5	Manufacturer Data
8.)	Lead (Pb)	--	--		--	--	
9.)	Total Hazardous Air Pollutants (HAPs)	1.568	0.121	gr/hp-hr	0.36	1.568	Manufacturer Data
10.)	Fluoride (F)						
11.)	Hydrogen Sulfide (H2S)						
12.)	Mercury (Hg)						
13.)	Total Reduced Sulfur (TRS)						
14.)	Sulfuric Acid Mist (SAM)						

**Provide your calculations as an attachment and explain how all process variables and emissions factors were selected.*

Revised 11/3/2014

Hazardous Air Pollutants (HAPs) and Toxic Air Contaminents

Pollutants:		Pre-Controlled Potential Emissions (tons/yr)	Efficiency Standards: Potential to Emit (PTE)	Efficiency Standards: Units	Potential to Emit (lbs/hr)	Potential to Emit (tons/yr)	Basis for Determination
1.)	n-hexane	0.048	0.004	gr/hp-hr	0.010959	0.048	AP-42
2.)	Benzene	0.019	0.002	gr/hp-hr	0.004338	0.019	AP-42
3.)	Toluene	0.017	0.002	gr/hp-hr	0.003881	0.017	AP-42
4.)	Acrolein	0.22	0.019	gr/hp-hr	0.050228	0.22	AP-42
5.)	Acetaldehyde	0.358	0.031	gr/hp-hr	0.081735	0.358	AP-42
6.)	HCOH	0.906	0.07	gr/hp-hr	0.207	0.906	Manufacturer Data
7.)							
8.)							

Greenhouse Gases (GHGs)

Pollutants:		Pre-Controlled Potential Emissions (tons/yr)	Efficiency Standards: Potential to Emit (PTE)	Efficiency Standards: Units	Potential to Emit (lbs/hr)	Potential to Emit (tons/yr)	Basis for Determination
1.)	Carbon Dioxide	5012.59	387.4	gr/hp-hr	1144.43	5012.59	Other
2.)	Methane	0.09	0.007	gr/hp-hr	0.02	0.09	Other
3.)	Nitrous Oxide	0.009	0.0007	gr/hp-hr	0.002	0.009	Other
4.)	CO_2e	5017.77			1145.61	5017.77	Other
5.)							
6.)							
7.)							
8.)							

Compliance Partners Inc.

January 28, 2015

JAN 2015
RECEIVED
AIR QUALITY
DIVISION

Mr. Cole Anderson
Wyoming Department of Environmental Quality
Division of Air Quality
122 W. 25th Street
Herschler Building, 2-E
Cheyenne, WY 82002

Re: Construction Permit Modification Application
Uprising Compressor Station
Wyoming Air Quality Permit MD-12882
Rowdy Pipeline, LLC

Dear Mr. Anderson:

Compliance Partners Inc., on behalf of Rowdy Pipeline, LLC (Rowdy), is herein submitting a Construction Permit Modification Application for the Uprising Compressor Station.

Included with this letter is one copy of the completed permit application and a CD containing a pdf of the permit modification application.

Please feel free to contact myself with any questions at 970-206-4443 ext. 14 or at jeichman@compliance-partners.com or Kerry Egan at kegan@yatespetroleum.com.

Sincerely,
COMPLIANCE PARTNERS, INC.

Jeff Eichman
Senior Project Engineer

Cc: Kerry Egan—Rowdy

Reviewer NTH
cc:
Modeler
D.E.
File A0000492
IMP FID 16812

4038 Timberline Rd., Suite 100· Ft. Collins, CO 80525·970/206-4443·720/489-3902 Fax
www.compliance-partners.com

PERMIT MODIFICATION APPLICATION

UPRISING COMPRESSOR STATION

Rowdy Pipeline, LLC

Prepared for:

Rowdy Pipeline, LLC
408 Frontage Road
Gillette, Wyoming 82716

Prepared by:

Compliance Partners™
4038 Timberline Road, Suite 100
Fort Collins, Colorado 80505
970/206-4443

JANUARY 2015

TABLE OF CONTENTS

Section — Page

1.0 INTRODUCTION 1
- 1.1 Equipment 1
- 1.2 Process Specifications 2

2.0 EMISSION SOURCE INVENTORY 4
- 2.1 Facility Potential to Emit (PTE) 4
- 2.2 Conventional Gas Inlet Composition 6
- 2.3 Produced Water Tank Emissions 6
- 2.4 Low Pressure Flare 7
  - 2.4.1 Condensate Tank Vapors 8
  - 2.4.2 Low Pressure Flare Emission Calculations 8
- 2.5 High Pressure Flare 10
  - 2.5.1 Blowdown Volume and Emission Estimate 10
  - 2.5.2 High Pressure Flare Emission Calculations 11
- 2.6 Rod Packing Vents 12
- 2.7 Pigging Activities 14
- 2.8 Line Heater 16

TABLE OF FIGURES

Figures		Page
Figure 1	General Location Map	Attachment A
Figure 2	Plot Plan	Attachment A
Figure 3	Process Flow Diagram	Attachment A

TABLE OF TABLES

Tables | Page

Table 1: Uprising PTE Table MD-12882 4
Table 2: Uprising Modification Proposed PTE Table 5
Table 3: Composition of Facility Inlet 6
Table 4: Produced Water Tank Emissions 7
Table 5: Condensate Tank Vapors Sent to Low Pressure Flare 8
Table 6: Low Pressure Flare Stream Composition and Heat Rate 9
Table 7: Low Pressure Flare Emissions 10
Table 8: Facility Blow Down Emissions 11
Table 9: High Pressure Flare Stream Composition and Heat Rate 11
Table 10: High Pressure Flare Emissions 12
Table 11: Rod Packing Vent Emissions 13
Table 12: Pig Launcher Emissions 14
Table 13: Pig Receiver Emissions 15
Table 14: Total Emissions from Pigging Activities 15
Table 15: Line Heater Emissions 16

1.0 INTRODUCTION

Rowdy Pipeline, LLC (Rowdy) is submitting this construction permit modification application for the Uprising Compressor Station. The Uprising Compressor Station is located in the SW/4SE/4 of Section 28, Township 42 North, Range 72 West in Campbell County, Wyoming (see figure 1 in Attachment A). The facility's most recently issued permit is MD-12882.

The Uprising Compressor station compresses and dehydrates gas collected from smaller screw stations and oil wells in the area. The facility processes conventional high VOC rich gas from oil wells.

1.1 Equipment

Rowdy would like to modify the Uprising Compressor station such that rod packing vent emissions inventoried in the facility PTE accurately reflect the amount of emissions from these sources. The application for MD-12882 assumed all 9 engines would have rod packing vents and rod packing vent emissions. Only reciprocating compressors have rod packing vent emissions and there are only three reciprocating compressors at the facility. Emissions from this source have been modified to reflect the actual amount of emissions produced from this source.

Rowdy also requests approval to install two flares at the facility. One high pressure flare will be used to control the facility's blowdown emissions and one low pressure flare will be used to control condensate tank and condensate loading emissions. Control efficiency for both units is assumed to be 98 percent.

Rowdy would like to remove the Ajax 2803LE engine in MD-12882 as this engine will not be needed.

This modification seeks approval to install two bullet tanks at the facility with capacities of 40,000 gallons or less. The bullet tanks will be capable of storing the facility's condensate under pressure to reduce emissions. The bullet tanks will be equipped with an electric VRU to recycle vapors from the tanks back to the inlet for product recovery. A 1.5 MMBtu/hr line heater will be installed to heat product entering the bullet tanks should operating conditions warrant its operation.

Currently Permitted Equipment:

- Three (3) caterpillar G3516B engines and three (3) engine driven reciprocating compressors
- Four (4) rich or lean burn engines <637 hp and four (4) engine driven screw compressors.
- One (1) Ajax DCP-2802LE engine and one (1) engine driven screw compressor.
- One (1) Ajax DCP-2803 LE engine and one (1) engine driven screw compressor.
- Two (2) 10.0 MMscfd TEG dehydrator units with two (2) 0.75 MMBtu/hr reboilers.
- Two (2) 400 bbl atmospheric storage tanks used for produced water storage

Proposed:

- One (1) line heater rated at 1.5 MMBtu/hr or multiple units with a cumulative heat rating not to exceed 1.5 MMBtu/hr.

- Two (2) Flares
- Two (2) pig receivers
- Two (2) pig launchers
- One (1) VRU
- Two (2) pressurized bullet tanks (40,000 gallons or less) for storage of condensate.

1.2 Process Specifications

Field gas will enter the facility and feed directly into a separator. Water from the inlet separator will be routed to an atmospheric produced water tank. Condensate from the inlet separator will be fed to the facility condensate tank. Overhead gas from the inlet separator will enter a series of compressors each of which will have post compression heat exchangers and liquids scrubbers. Liquids removed after each stage of compression will be routed to a three phase separator where water and condensate will be separated and transported to storage tanks.

Conventional natural gas will enter the TEG contactor at high pressure (700-900 Psi) and at an anticipated temperature of 60-100 degrees Fahrenheit (this will vary with ambient temperature). High pressure rich TEG will be flashed to a pressure sufficient for entry into the facility's fuel system (30-60 psi). Vapors from the flash tank will be used as fuel for the TEG reboiler. From the flash tank rich TEG will enter the dehydrators TEG regenerator column. Overhead vapors from the TEG regenerator will be routed through a BTEX eliminator. Liquids that condense from the regenerator vent vapors (still vent vapors) will be routed to the facility's atmospheric produced water tanks. Un-condensable vapors from the BTEX eliminator will be routed to the TEG regenerator heater (reboiler) where they will mix with the fuel and air entering the firing chamber for combustion. The BTEX eliminator system is reported by the manufacturer as having a control efficiency of 98%.

Condensate removed from the inlet separator and post compression scrubbers will be routed through a line heater before entering the facility bullet tanks. The heated liquids will enter the facility bullet tank and flash to a pressure of between 6 and 10 psig. The bullet tank and line heater will act as a stabilizer for the liquids in the tank. The high temperature of the heated liquids will cause low molecular weight hydrocarbons to evaporate. Flash vapors from the facility condensate tanks will be recycled to the facility inlet. Condensate tank flash vapors will be transported to the facility inlet by utilizing an inherent pressure gradient between the bullet tank and inlet separator or by using an electric VRU to create a pressure gradient. Condensate from the bullet tank will be loaded using tanker trucks that operate at 0-1 psig. During loading operations, flash vapors from the tanker will be routed to the low pressure flare for destruction.

Condensate loading and storage will operate by one of two methods the first of which will involve loading the condensate into a pressurized tanker truck. If this method is used the line heater will not be operating and loading emissions will be negligible. The second method is the method with the highest potential to emit and involves loading the condensate into atmospheric tanker trucks. Because the liquids are stored under pressure considerable flash vapors can be produced during the loading process. Should this method be used the line heater will be used to heat the condensate to reduce the amount of flash vapors generated by the loading process. This

application and all calculations herein assume a worst case scenario where atmospheric tanker trucks are used for loading the condensate, requiring flare and line heater operation, though that may not be the case.

2.0 EMISSION SOURCE INVENTORY

An emission source inventory for the Uprising Compressor Station as proposed has been developed. The emission estimates listed for the engines are the values set forth by Permit MD-12882. Only sources affected by this modification have been inventoried. The modified emission sources include; condensate tanks, produced water tanks, compressor blowdown emissions and rod packing vents. New emission sources requested in this modification have also been inventoried and are as follows; line heater, pigging activities, high pressure flare and low pressure flare.

2.1 Facility Potential to Emit (PTE)

Sources presented in table 1 with red text are the sources which emissions have been modified. Table 1 displays the original PTE values from permit MD-12882. Table 2 quantifies the emissions resulting from the requested permit modifications. The last row of Table 2 displays the change in emissions resulting from the modifications requested. It is also important to note that all loading emissions have now been included with the tank emissions.

Table 1: Uprising PTE Table MD-12882

ID	Source	Rating / *Throughput*	NOx		CO		VOC		HCOH	
			lb/hr	tpy	lb/hr	tpy	lb/hr	tpy	lb/hr	tpy
		Emissions as presented in MD-12882								
E1	Lean/Rich <637 hp	**<637 hp**	1.40	6.20	0.70	3.10	1.00	4.30	0.10	0.43
E2	Lean/Rich <637 hp	**<637 hp**	1.40	6.20	0.70	3.10	1.00	4.30	0.10	0.43
E3	Lean/Rich <637 hp	**<637 hp**	1.40	6.20	0.70	3.10	1.00	4.30	0.10	0.43
E4	Lean/Rich <637 hp	**<637 hp**	1.40	6.20	0.70	3.10	1.00	4.30	0.10	0.43
E5	Caterpillar G3516B	**1380hp**	1.50	6.70	1.50	6.70	2.10	9.30	0.21	0.93
E6	Caterpillar G3516B	**1380hp**	1.50	6.70	1.50	6.70	2.10	9.30	0.21	0.93
E7	Caterpillar G3516B	**1380hp**	1.50	6.70	1.50	6.70	2.10	9.30	0.21	0.93
E8	Ajax 2803 LE	**528 hp**	1.20	5.10	0.30	1.50	0.30	1.50	0.10	0.46
E9	Ajax 2802LE	**353 hp**	0.80	3.40	1.60	6.80	0.40	1.90	0.23	1.02
D1a	10 MMscfd TEG still Vent	**10 MMscfd**	--	--	--	--	Controlled by Condenser/ Reboiler			
D1b	10 MMscfd TEG flash Vent	**10 MMscfd**	--	--	--	--	Controlled by Reboiler			
R1	Dehy 1 reboiler	**750 Mbtu/hr**	0.10	0.30	0.10	0.30	1.10	4.90	<0.01	0.01
D2a	10 MMscfd TEG still Vent	**10 MMscfd**	--	--	--	--	Controlled by Condenser/ Reboiler			
D2b	10 MMscfd TEG flash Vent	**10 MMscfd**	--	--	--	--	Controlled by Reboiler			
R2	Dehy 2 reboiler	**750 Mbtu/hr**	0.10	0.30	0.10	0.30	1.10	4.90	<0.01	0.01
T1	Condensate Tanks	**400 bbl**	--	--	--	--	8.60	37.70	--	--
T2	Produced Water Tanks	**400 bbl**	--	--	--	--	--	--	--	--
Start	Engine Starter Emissions		--	--	--	--	0.70	3.10	--	--
BD	Compressor Blow Down Emissions		--	--	--	--	2.80	12.30	--	--
RP	Rod Packing Vents		--	--	--	--	10.90	47.90	--	--
CL	Condensate Loadout		--	--	--	--	0.10	0.50	--	--
PL	Produced Water Loadout		--	--	--	--	<0.1	<0.1	--	--
Fug	Fugatives		--	--	--	--	3.90	17.10	--	--
		PTE total from MD-12882:	**12.30**	**54.00**	**9.40**	**41.40**	**40.20**	**176.90**	**1.36**	**6.01**

Table 2: Uprising Modification Proposed PTE Table

ID	Source	Rating/ throughput	NOx		CO		VOC		HCOH	
			lb/hr	tpy	lb/hr	tpy	lb/hr	tpy	lb/hr	tpy
		New/Modified Proposed PTE								
E1	Lean/Rich <637 hp	**<637 hp**	1.40	6.20	0.70	3.10	1.00	4.30	0.10	0.43
E2	Lean/Rich <637 hp	**<637 hp**	1.40	6.20	0.70	3.10	1.00	4.30	0.10	0.43
E3	Lean/Rich <637 hp	**<637 hp**	1.40	6.20	0.70	3.10	1.00	4.30	0.10	0.43
E4	Lean/Rich <637 hp	**<637 hp**	1.40	6.20	0.70	3.10	1.00	4.30	0.10	0.43
E5	Caterpillar G3516B	**1380hp**	1.50	6.70	1.50	6.70	2.10	9.30	0.21	0.93
E6	Caterpillar G3516B	**1380hp**	1.50	6.70	1.50	6.70	2.10	9.30	0.21	0.93
E7	Caterpillar G3516B	**1380hp**	1.50	6.70	1.50	6.70	2.10	9.30	0.21	0.93
E9	Ajax 2802LE	**353 hp**	0.80	3.40	1.60	6.80	0.40	1.90	0.23	1.02
D1a	10 MMscfd TEG still Vent	**10 MMscfd**	--	--	--	--	Controlled by Condenser/ Reboiler			
D1b	10 MMscfd TEG flash Vent	**10 MMscfd**	--	--	--	--	Controlled by Reboiler			
R1	Dehy 1 reboiler	**750 Mbtu/hr**	0.10	0.30	0.10	0.30	1.10	4.90	<0.01	0.01
D2a	10 MMscfd TEG still Vent	**10 MMscfd**	--	--	--	--	Controlled by Condenser/ Reboiler			
D2b	10 MMscfd TEG flash Vent	**10 MMscfd**	--	--	--	--	Controlled by Reboiler			
R2	Dehy 2 reboiler	**750 Mbtu/hr**	0.10	0.30	0.10	0.30	1.10	4.90	<0.01	0.01
T1 - T2	Condensate Tanks	**400 bbl**	--	--	--	--	Controlled By LP Flare			
T3-T4	Produced Water Tanks	**400 bbl**	--	--	--	--	0.07	0.29	--	--
BD	Compressor Blow Down Emissions		--	--	--	--	Controlled By HP Flare			
RP	Rod Packing Vents	**3 recips**	--	--	--	--	5.62	24.63	--	--
H1	Line Heater	**1.5 Mbtu/hr or less**	0.15	0.64	0.12	0.54	0.01	0.04	0.00	0.00
PIG	Pigging Activities		--	--	--	--	--	2.01	--	--
FL1	High Pressure Flare	**0.25 MMBtu/hr**	0.07	0.31	0.02	0.08	0.29	1.25	0.00	0.00
FL2	Low Pressure Flare	**0.75 MMBtu/hr**	0.10	0.45	0.03	.0.11	0.67	2.95	0.00	0.00
Start	Engine Starter Emissions		--	--	--	--	0.70	3.10	--	--
Fug	Fugatives		--	--	--	--	3.90	17.10	--	--
		New PTE Total:	11.42	**50.31**	9.27	**40.63**	24.16	**108.16**	1.26	**5.55**
		Change in Emissions:	-0.9	**-3.7**	-0.1	**-0.8**	-16.0	**-68.7**	-0.1	**-0.5**

2.2 Conventional Gas Inlet Composition

The gas composition below was used as input for the ProMax process model and for calculating emissions from blowdowns, rod packing vents, pigging activities and flares. The analysis has been included in Attachment C.

Table 3: Composition of Facility Inlet

Source: Uprising LP Gas Analysis 10-8-2014

Species	MW	Mol%	WT%
Carbon Dioxide	44.0	1.24	2.883
Nitrogen	28.0	0.75	0.812
Methane	16.0	65.93	45.870
Ethane	30.1	12.35	16.574
Propane	44.1	8.64	17.427
Isobutane	58.1	1.28	2.678
n-Butane	58.1	3.33	6.787
Isopentane	72.2	1.06	1.968
n-Pentane	72.2	1.13	2.058
Cyclopentane	70.1	0.08	0.105
n-Hexane	86.2	0.46	0.644
Cyclohexane	84.2	0.31	0.206
Other Hexanes	86.2	0.73	0.791
Heptanes	100.2	1.68	0.657
Methylcyclohexane	98.2	0.39	0.159
2,2,4-Trimethylpentane	114.2	0.10	0.066
Benzene	78.1	0.04	0.042
Toluene	92.1	0.07	0.073
Ethylbenzene	106.2	0.05	0.013
Xylenes	106.2	0.13	0.035
C8+	114.2	0.26	0.152
Total		100.00	100.00
VOC %		19.74	33.86
HAPs		0.85	0.87
Average VOC MW	61.70	lb/lbmole	

2.3 Produced Water Tank Emissions

The facility's produced water tanks are atmospheric tanks with no control. Water from the inlet separator, post compression scrubber separators and the TEG dehy condensers will be fed to the produced water tanks. Table 4 presents a speciated inventory of uncontrolled emissions predicted for the water tank. Emissions were inventoried using ProMax. A ProMax report has been included in Attachment D.

Table 4: Produced Water Tank Emissions

Species	Carbons	MW	W&B tons/year	Flashing ton/year	Loading tons/year	Total tons/year
Carbon Dioxide	1	48	0.01	0.01	0.00	0.02
Hydrogen Sulfide	0	34	0.00	0.00	0.00	0.00
Nitrogen	0	28	0.00	0.00	0.00	0.00
Methane	1	16	0.00	0.03	0.00	0.03
Ethane	2	30	0.00	0.05	0.00	0.05
Propane	3	44	0.00	0.18	0.00	0.18
Isobutane	4	58	0.00	0.02	0.00	0.02
n-Butane	4	58	0.00	0.06	0.00	0.06
Isopentane	5	72	0.00	0.01	0.00	0.01
n-Pentane	5	72	0.00	0.01	0.00	0.01
Cyclopentane	5	72	0.00	0.00	0.00	0.00
n-Hexane	6	86	0.00	0.00	0.00	0.00
2-Methylpentane	6	86	0.00	0.00	0.00	0.00
3-Methylpentane	6	86	0.00	0.00	0.00	0.00
Cyclohexane	6	86	0.00	0.00	0.00	0.00
Heptane	7	100	0.00	0.00	0.00	0.00
Methylcyclohexane	7	100	0.00	0.00	0.00	0.00
2,2,4-Trimethylpentane	8	114	0.00	0.00	0.00	0.00
Benzene	6	86	0.00	0.00	0.00	0.00
Toluene	6	86	0.00	0.00	0.00	0.00
Ethylbenzene	8	114	0.00	0.00	0.00	0.00
m-Xylene	8	114	0.00	0.00	0.00	0.00
p-Xylene	8	114	0.00	0.00	0.00	0.00
o-Xylene	8	114	0.00	0.00	0.00	0.00
Octane	8	114	0.00	0.00	0.00	0.00
Water	0	18	0.07	0.00	0.03	0.10
TEG	6	150	0.00	0.00	0.00	0.00
		Total:	0.08	0.39	0.03	0.51
Flow Rate:	1.3831	scf/hr				
VOC:			0.00	0.29	0.00	0.29

2.4 Low Pressure Flare

The low pressure flare will be used to control flash and loading vapors from the condensate tank during loading operations. The flare is only anticipated to operate during loading operations, however, emission for the low pressure flare assume a pilot fuel rate of 50 scf/hr and a purge gas rate of 40 scf/hr. Emissions were calculated based on sustained operation of the flare to give Rowdy flexibility when operating the facility.

2.4.1 Condensate Tank Vapors

All condensate tank emissions in the PTE are attributed to the low pressure flare. The condensate tanks will operate at a pressure of between 6 and 10 psig. Vapors created as the heated liquids flash when entering the tank are recycled to the facility inlet for product recovery. During loading events the condensate will be flashed to atmospheric pressure when transferred to the tanker truck. This flashing should not produce flash vapors as the liquids were heated (stabilized) at high temperature before entering the bullet tank. There will still be vapors generated during the loading process due to agitation of the liquid and contact with fresh air. In order to approximate the quantity of vapors produced the ProMax tank losses property stencil was used. The property stencil uses AP-42 tank emission guidance to determine the estimated vapors released from atmospheric storage tanks. A summary of the emissions estimated using the ProMax property stencil is presented in Table 5.

Table 5: Condensate Tank Vapors Sent to Low Pressure Flare

Species	Carbons	MW	W&B	Loading	Total			
			tons/year	tons/year	tons/year	lb/hr	mole/hr	mole%
Carbon Dioxide	1	48	0.03	0.07	0.10	0.02	0.00	0.10
Hydrogen Sulfide	0	34	0.00	0.00	0.00	0.00	0.00	0.00
Nitrogen	0	28	0.00	0.00	0.00	0.00	0.00	0.00
Methane	1	16	0.04	0.08	0.12	0.03	0.00	0.35
Ethane	2	30	1.61	3.28	4.89	1.12	0.04	7.57
Propane	3	44	8.32	16.94	25.26	5.77	0.13	26.68
Isobutane	4	58	4.00	8.15	12.15	2.77	0.05	9.74
n-Butane	4	58	12.94	26.37	39.31	8.97	0.15	31.51
Isopentane	5	72	4.60	9.37	13.97	3.19	0.04	9.02
n-Pentane	5	72	4.21	8.58	12.80	2.92	0.04	8.26
Cyclopentane	5	72	0.21	0.44	0.65	0.15	0.00	0.42
n-Hexane	6	86	0.76	1.55	2.31	0.53	0.01	1.25
2-Methylpentane	6	86	1.20	2.45	3.65	0.83	0.01	1.97
3-Methylpentane	6	86	0.43	0.87	1.30	0.30	0.00	0.70
Cyclohexane	6	86	0.32	0.65	0.97	0.22	0.00	0.52
Heptane	7	100	0.95	1.93	2.87	0.66	0.01	1.34
Methylcyclohexane	7	100	0.21	0.43	0.64	0.15	0.00	0.30
2,2,4-Trimethylpentane	8	114	0.07	0.15	0.22	0.05	0.00	0.09
Benzene	6	86	0.04	0.07	0.11	0.02	0.00	0.06
Toluene	6	86	0.02	0.04	0.07	0.02	0.00	0.04
Ethylbenzene	8	114	0.01	0.01	0.02	0.00	0.00	0.01
m-Xylene	8	114	0.00	0.00	0.01	0.00	0.00	0.00
p-Xylene	8	114	0.01	0.02	0.03	0.01	0.00	0.01
o-Xylene	8	114	0.00	0.01	0.01	0.00	0.00	0.00
Octane	8	114	0.05	0.10	0.15	0.03	0.00	0.06
Water	0	18	0.00	0.00	0.00	0.00	0.00	0.00
TEG	6	150	0.00	0.00	0.00	0.00	0.00	0.00
		Total:	40.03	81.56	121.58	27.76	0.49	100.00
Flow Rate:	186.14	scf/hr						

2.4.2 Low Pressure Flare Emission Calculations

Emissions from the low pressure flare are calculated using a predicted waste gas flow rate of 186 scf/hr and a pilot fuel and purge gas flow rate of 90 scf/hr. Table 6 summarizes the total vapor

composition and other properties of the streams routed to the flare. Table 7 summarizes the emission factors used, controlled emissions and uncontrolled emissions from the flare. Even though a lb /hr emission rate is calculated based on dividing total emission by 8,760 hours the emissions will occur much faster and in shorter time frames (during loading operations).

Table 6: Low Pressure Flare Stream Composition and Heat Rate

Component	MW	Reactive carbons (Per Mole)	Btu/scf LHV	Condensate Tank Vapors	Pilot Fuel	Purge	Average composition
				Mole %			
Carbon Dioxide	44.0	0	0.0	0.101	5.209	1.241	1.191
Nitrogen	28.0	0	0.0	0.000	0.017	0.747	0.111
Methane	16.0	1	911.0	0.352	8.667	65.930	11.357
Ethane	30.1	2	1631.0	7.573	8.361	12.345	8.407
Propane	44.1	3	2353.0	26.682	15.237	8.640	21.996
i-Butane	58.1	4	3094.0	9.739	2.161	1.280	7.141
n-Butane	58.1	4	3101.0	31.506	9.376	3.326	23.417
i-Pentane	72.2	5	3698.0	9.018	4.342	1.058	7.018
n-Pentane	72.2	5	3709.0	8.261	5.924	1.133	6.805
Cyclopentane	70.1	5	3512.1	0.419	2.673	0.081	0.778
n-Hexane	86.2	6	4403.8	1.250	2.089	0.459	1.287
Cyclohexane	84.2	6	4179.7	0.524	2.868	0.307	0.917
Other Hexanes	86.2	6	5096.0	2.673	2.447	0.729	2.351
Heptane	100.2	7	5100.0	1.336	1.963	1.675	1.499
Methylcyclohexane	98.2	7	4863.6	0.298	1.141	0.392	0.464
2,2,4-Trimethylpentane	114.2	8	6231.6	0.091	0.163	0.103	0.106
Benzene	78.1	6	3590.9	0.058	7.241	0.037	1.356
Toluene	92.1	7	4273.6	0.036	5.332	0.068	0.999
Ethylbenzene	106.2	8	4970.5	0.008	0.231	0.052	0.055
Xylenes	106.2	8	4958.2	0.016	0.507	0.134	0.122
Octane	114.2	8	5796.1	0.060	0.181	0.263	0.111
Water	18.0	0	0.0	0.000	13.871	0.000	2.512
		Total :		100.0	100.0	100.0	100.0
Flare Efficiency	Feed Rate		scf/hr	186.14	50.00	40.00	276.14
98%	Average MW		lb/lbmole	56.61	52.56	27.22	51.62
Average Carbons/mole	Heat Content		Btu/scf	2997.19	2442.90	1441.81	2671.53
3.49	Energy Rate		MMBtu/hr	0.56	0.12	0.06	**0.74**

Table 7: Low Pressure Flare Emissions

Species	EF	EF units	Uncontrolled		Controlled	
			lb/hr	tpy	lb/hr	tpy
VOC	--	--	33.70	147.63	0.67	2.95
n-hexane	--	--	0.81	3.54	0.02	0.07
2,2,4-Trimethylpentane	--	--	0.09	0.39	0.00	0.01
Benzene	--	--	0.77	3.38	0.02	0.07
Toluene	--	--	0.67	2.94	0.01	0.06
Ethyl Benzene	--	--	0.04	0.18	0.00	0.00
Xylene	--	--	0.09	0.41	0.00	0.01
HAPS	--	--	2.48	10.84	0.05	0.22
NO_X	0.14	lb/MMBtu	0.10	0.45	0.10	0.45
CO	0.035	lb/MMBtu	0.03	0.11	0.03	0.11
HCOH	0.075	lb/10^6 scf	0.00	0.00	0.00	0.00
CO_2	--	--	0.38	1.67	109.95	481.58
CH_4	--	--	1.33	5.81	0.03	0.12
N_2O	0.0001	kg/MMBtu	0.00	0.00	0.00	0.00
CO_2e	--	--	33.62	147.24	110.66	484.70

2.5 High Pressure Flare

The high pressure is anticipated to operate continually as blowdown events are often unscheduled when resulting from an ESD event. Inventoried emissions from the high pressure flare assume a pilot fuel rate of 50 scf/hr and a purge gas rate of 40 scf/hr.

2.5.1 Blowdown Volume and Emission Estimate

All blowdown emissions are attributed to the high pressure flare in the facility PTE. When an engine blowdown or facility ESD occurs, all vapors from blowdown vents will be routed to the high pressure flare for destruction. Blow down emissions assume each compressor will be blown down once per week. A frequency of once per week is an overestimation of the anticipated occurrence of these events. The volume of each engines blowdown is also assumed to be equivalent to a large reciprocating compressor. This is only the case for 3 of the 9 compressors. The blowdown frequency and volume have been overestimated to account for an ESD event for which a frequency cannot be predicted at this time. All blowdown vapors will be routed to the facility's high pressure flare. Emissions estimates for these blowdown events have been included in Table 8.

Table 8: Facility Blow Down Emissions

Basis				
Ariel JGE4-2 P&IDs were used for Volume Estimate				
Blowdown Volume	4.2	Mscf/event/comp		
Number Compressors	9			
Blowdowns for base loaded	52	per year		
Total Vent Volume		1965.60	Mscf/year	
Emissions Estimate				
Component	Mole %	MW	Uncontrolled tpy	Controlled tpy
VOC	19.737	61.699	31.578	0.632
CO_2	1.241	44.000	1.416	1.416
CH_4	65.930	16.000	27.355	0.547
2,2,4-Trimethylpentane	0.103	114.230	0.305	0.006
Benzene	0.037	78.110	0.075	0.001
Toluene	0.068	92.140	0.162	0.003
Ethylbenzene	0.052	106.170	0.143	0.003
Xylenes	0.134	106.170	0.369	0.007
n-Hexane	0.459	86.170	1.026	0.021
CO_2e			685.28	15.09
Control Efficiency	98%			

2.5.2 High Pressure Flare Emission Calculations

Table 9 summarizes the total vapor composition and other properties of the streams routed to the flare. Table 10 summarizes the emission factors used, controlled emissions and uncontrolled emissions from the flare. Even though a lb /hr emission rate is calculated based on dividing total emission by 8,760 hours the emissions will occur much faster and in shorter time frames (during blowdown events).

Table 9: High Pressure Flare Stream Composition and Heat Rate

Component	MW	Reactive carbons (Per Mole)	Btu/scf LHV	Blowdown Gas flared	Pilot Fuel	Purge	Average composition
				Mole %			
Carbon Dioxide	44.0	0	0.0	1.241	5.209	1.241	1.872
Nitrogen	28.0	0	0.0	0.747	0.017	0.747	0.631
Methane	16.0	1	911.0	65.930	8.667	65.930	56.823
Ethane	30.1	2	1631.0	12.345	8.361	12.345	11.711
Propane	44.1	3	2353.0	8.640	15.237	8.640	9.689
i-Butane	58.1	4	3094.0	1.280	2.161	1.280	1.420
n-Butane	58.1	4	3101.0	3.326	9.376	3.326	4.288
i-Pentane	72.2	5	3698.0	1.058	4.342	1.058	1.580
n-Pentane	72.2	5	3709.0	1.133	5.924	1.133	1.895
Cyclopentane	70.1	5	3512.1	0.081	2.673	0.081	0.493
n-Hexane	86.2	6	4403.8	0.459	2.089	0.459	0.718
Cyclohexane	84.2	6	4179.7	0.307	2.868	0.307	0.714

Other Hexanes	86.2	6	5096.0	0.729	2.447	0.729	1.002
Heptane	100.2	7	5100.0	1.675	1.963	1.675	1.721
Methylcyclohexane	98.2	7	4863.6	0.392	1.141	0.392	0.511
2,2,4-Trimethylpentane	114.2	8	6231.6	0.103	0.163	0.103	0.112
Benzene	78.1	6	3590.9	0.037	7.241	0.037	1.183
Toluene	92.1	7	4273.6	0.068	5.332	0.068	0.905
Ethylbenzene	106.2	8	4970.5	0.052	0.231	0.052	0.080
Xylenes	106.2	8	4958.2	0.134	0.507	0.134	0.193
Octane	114.2	8	5796.1	0.263	0.181	0.263	0.250
Water	18.0	0	0.0	0.000	13.871	0.000	2.206
		Total :		100.0	100.0	100.0	100.0
Flare Efficiency	Feed Rate		scf/hr	224.38	50.00	40.00	314.38
98%	Average MW		lb/lbmole	27.22	52.56	27.22	31.25
Average Carbons/mole	Heat Content		Btu/scf	1441.81	2442.90	1441.81	1601.03
2.01	Energy Rate		MMBtu/hr	0.32	0.12	0.06	**0.50**

Table 10: High Pressure Flare Emissions

Species	EF	EF units	Uncontrolled		Controlled	
			lb/hr	tpy	lb/hr	tpy
VOC	--	--	14.28	62.55	0.29	1.25
n-hexane	--	--	0.51	2.25	0.01	0.04
2,2,4-Trimethylpentane	--	--	0.11	0.47	0.00	0.01
Benzene	--	--	0.77	3.36	0.02	0.07
Toluene	--	--	0.69	3.03	0.01	0.06
Ethyl Benzene	--	--	0.07	0.31	0.00	0.01
Xylene	--	--	0.17	0.75	0.00	0.01
HAPS	--	--	2.32	10.16	0.05	0.20
NO_X	0.14	lb/MMBtu	0.07	0.31	0.07	0.31
CO	0.035	lb/MMBtu	0.02	0.08	0.02	0.08
HCOH	0.075	lb/10^6 scf	0.00	0.00	0.00	0.00
CO_2	--	--	0.68	2.99	72.49	317.49
CH_4	--	--	7.56	33.12	0.15	0.66
N_2O	0.0001	kg/MMBtu	0.00	0.00	0.00	0.00
CO_2e	--	--	189.75	831.11	76.30	334.19

2.6 Rod Packing Vents

Cylinder rod packing gas vents are a continuous source of compressor emissions. Gas will leak from the packing and within the distance piece, and a vent is typically provided either at both the packing flange and distance piece, or just at the distance piece to direct this gas outside of any building the compressor may be housed within. The flow rate through the vent is assumed to be 50 scf/hour per reciprocating compressor unit for each of the ariel compressors driven by the 3516s and 25 scf/hr for the smaller Ajax compressor. Four compressors will be reciprocating compressors while the remaining four will be screw compressors that will not have rod vent packing vents. Table 11 summarizes the emission estimates for rod packing vents.

Table 11: Rod Packing Vent Emissions

Large Compressors		
Number	3	Units
Vent rate	50	scf/hr
Total gas vent	150	scf/hr
Small Compressors		
Number	1	Units
Vent rate	25	scf/hr
Total gas vent	25	scf/hr
Total Vent Rate:	175	scf/hr

Emissions Estimate

Species	MW	hple %	lb/hr	tpy
VOC	61.699	19.737	5.62	24.63
CO_2	44.000	1.241	0.25	1.10
CH_4	16.000	65.930	4.87	21.33
2,2,4-Trimethylpentane	114.230	0.103	0.05	0.24
Benzene	78.110	0.037	0.01	0.06
Toluene	92.140	0.068	0.03	0.13
Ethylbenzene	106.170	0.052	0.03	0.11
Xylenes	106.170	0.134	0.07	0.29
n-Hexane	86.170	0.263	0.10	0.46
CO2e			122.023	534.46

2.7 Pigging Activities

The Uprising Compressor Station will have 2 pig receivers operating at low pressure and 2 pig launchers operating at pressure equivalent to the facility's discharge pressure. Emissions from these units were calculated assuming an inlet pressure of 75 psig and a discharge pressure of 750 psig. Each launcher and receiver is estimated to have a 20 foot length with one ten foot section 12 inches in diameter and another 10 foot section 16 inches in diameter. Table 12 and Table 13 summarize the emissions and assumptions made to calculate emissions from the launchers and receivers respectively. The total emissions from all pigging activities are presented in Table 14.

Table 12: Pig Launcher Emissions

Number of pig launchers	2.0	
Frequency of Pigging	52.0	a year
Dimensions of Launchers		
Diameter	12" and 16"	inches
Length	20.0	ft
Gas Constant	10.7	ft^3psi/R-lbmole
Station Exit pressure (Max)	762.1	psia
Station Exit Temperature	70.0	F
Standard pressure	14.7	psi
Standard Temperature	60.0	F
Initial Volume	21.1	cf
Standard Volume	1074.6	scf
Total Vented Volume	0.112	MMscf

Emissions Estimate

Component	MW	Mole%	tpy
VOC	61.7	19.737	1.795
CO_2	44.0	1.241	0.081
Methane	16.0	65.930	1.555
2,2,4-Trimethylpentane	114.2	0.103	0.017
Benzene	78.1	0.037	0.004
Toluene	92.1	0.068	0.009
Ethylbenzene	106.2	0.052	0.008
Xylenes	106.2	0.134	0.021
n-Hexane	86.2	0.459	0.058

Table 13: Pig Receiver Emissions

Number of pig receivers	2.0	
Frequency of Pigging	52.0	a year
Dimensions of Receivers		
Diameter	12" and 16"	inches
Length	20.0	ft
Gas Constant	10.7	ft^3psi/R-lbmole
Station Inlet pressure (Max)	87.1	psia
Station Inlet Temperature	50.0	F
Standard pressure	14.7	psi
Standard Temperature	60.0	F
Initial Volume	21.1	cf
Standard Volume	127.6	scf
Total Vented Volume	0.013	MMscf

Emissions Estimate

Component	MW	Mole%	tpy
VOC	61.7	19.737	0.213
CO_2	44.0	1.241	0.010
Methane	16.0	65.930	0.185
2,2,4-Trimethylpentane	114.2	0.103	0.002
Benzene	78.1	0.037	0.001
Toluene	92.1	0.068	0.001
Ethylbenzene	106.2	0.052	0.001
Xylenes	106.2	0.134	0.002
n-Hexane	86.2	0.459	0.007

Table 14: Total Emissions from Pigging Activities

Component	tpy
VOC	2.01
CO_2	0.09
Methane	1.74
CO_2e	43.59
2,2,4-Trimethylpentane	0.02
Benzene	0.00
Toluene	0.01
Ethylbenzene	0.01
Xylenes	0.02
n-Hexane	0.07

2.8 Line Heater

The 1.5 MMBtu/hr line heater will be used to heat the facility condensate before it enters the bullet tanks. Heating the condensate in in this manner will increase the amount of low molecular weight hydrocarbons that vaporize when the liquids flash in the facility bullet tanks. Emission factors from AP-42 tables 1.4-2 and 1.4-3 are used to estimate criteria pollutant and HAP emissions from this source. Greenhouse gas emissions are estimated using emission factors from 40 CFR 98 Subpart C tables C-1 and C-2. A summary of the emissions calculated for the line heater are presented in Table 15 below.

Table 15: Line Heater Emissions

Basis		
Heat usage	1.5	MMBtu/hr
Number of units	1	unit
Operating Hours	8760	hr/year
Fuel Gas heat Value	1100	Btu/scf

Species	Emission Factors		Emissions	
	lb/MMscf	lb/MMBtu	lb/hr	tpy
NO_X	100	0.098	0.147	0.644
CO	84	0.082	0.124	0.541
VOC	5.5	0.005	0.008	0.035
Formaldehyde	0.075	0.000	0.000	0.000
SO_2	0.60	0.001	0.001	0.000
PM-total	7.6	0.007	0.011	0.049
PM10	5.7	0.006	0.008	0.037
PM2.5	1.9	0.002	0.003	0.012

Emission factors AP-42 table 1.4-2 and table 1.4-3

Greenhouse Gas Emission Estimates

Species	Emission Factors		Emissions	
	kg/MMBtu	lb/MMBtu	lb/hr	tpy
CO_2	53.02	116.9	175.3	768.0
CH_4	0.001	0.0022	0.0033	0.014
N_2O	0.0001	0.00022	0.00033	0.0014
CO_2e	--	--	175.5	768.7

Emission Factors from 40 CFR Part 98 Subpart C table C-1 and C-2

Attachment A
Figures

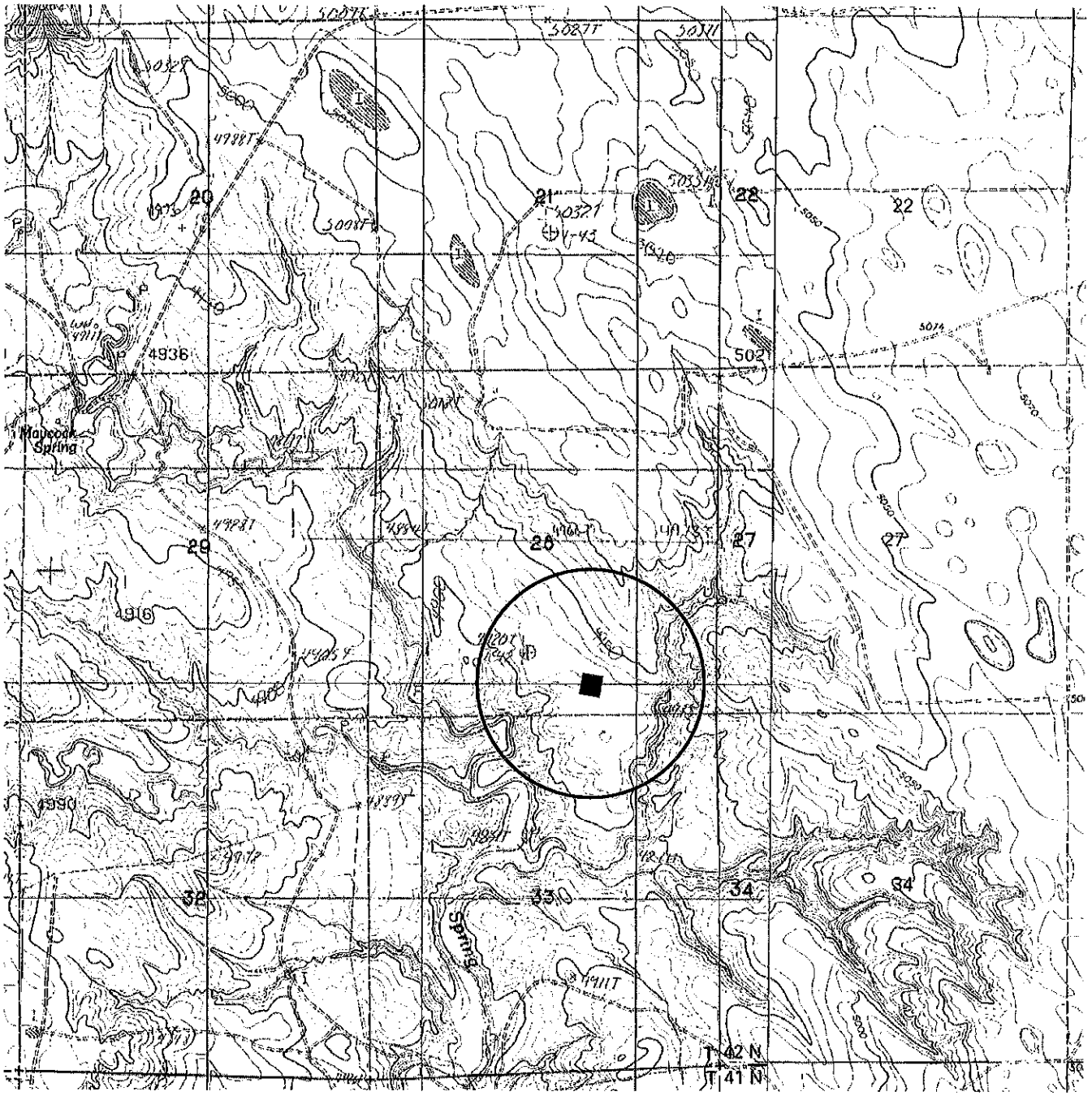

USGS Reno Flats and Teckla SW 7.5-minute Quadrangles

General Vicinity
Campbell County, WY

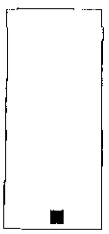

Compliance Partners™
4038 Timberline Rd., Suite 100
Fort Collins, CO 80525 (970) 206-4443
www.compliance-partners.com

ROWDY PIPELINE, L.L.C.

Uprising
Compressor Station

General Location Map
Section 28, T42N, R72W
Campbell County, WY

PROJECT NAME	FILENAME	SCALE	REVISED	FIGURE NUMBER
Rowdy (Yates): Uprising	Loc.srf	1" = 700 m	01/13/2015	1

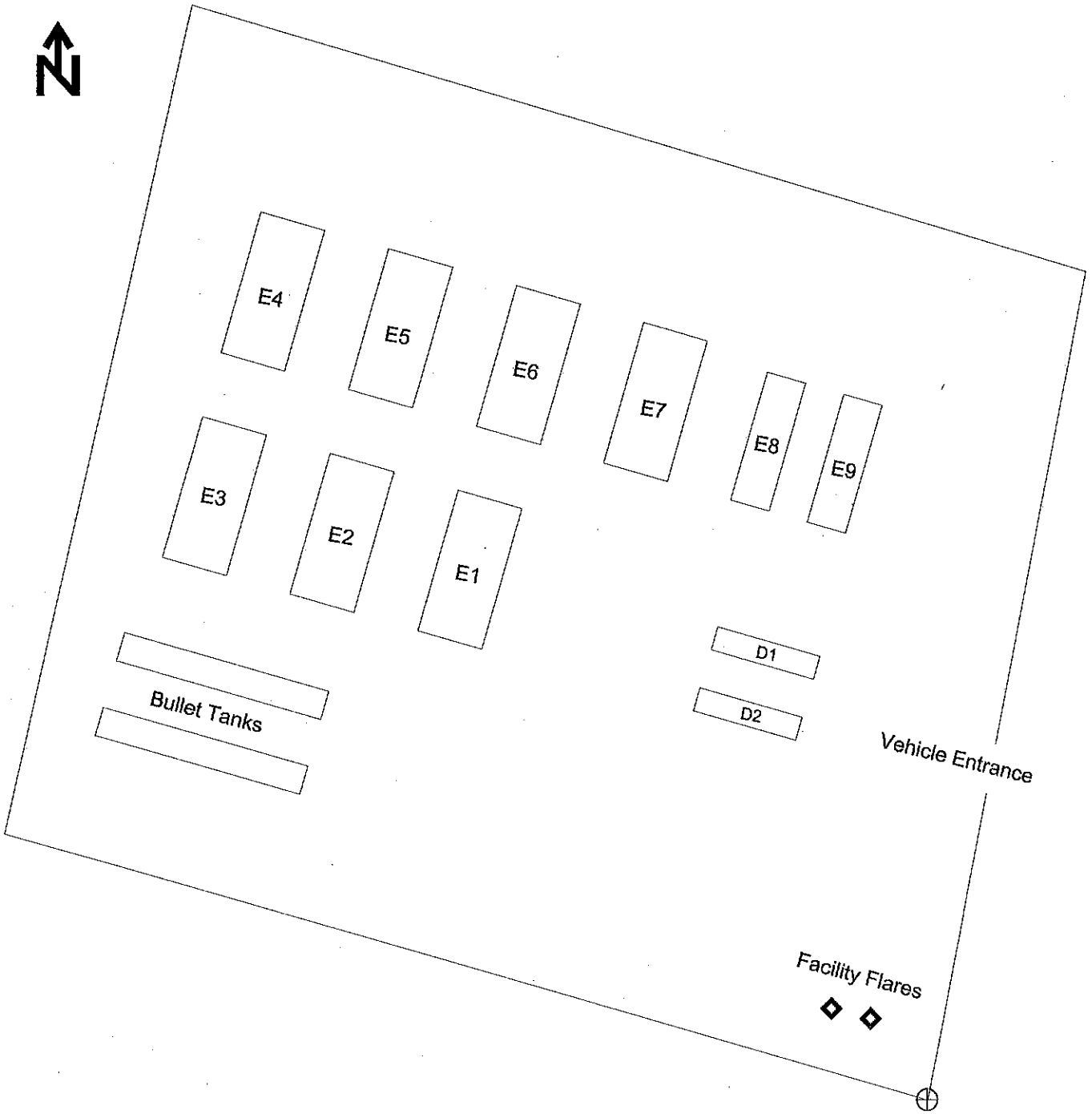

UTM Coordinates
458776 m E, 4825121 m N
Zone 13, NAD83

Compliance Partners inc.
4038 Timberline Rd., Suite 100
Fort Collins, CO 80525 (970) 206-4443
www.compliance-partners.com

Rowdy Pipeline, L.L.C.

Uprising Compressor Station

Simplified Plot Plan

PROJECT NAME	FILENAME	SCALE	REVISED	FIGURE NUMBER
Rowdy (Yates): Uprising	SimPlot.srf	1" = 60 ft	01/13/2014	2

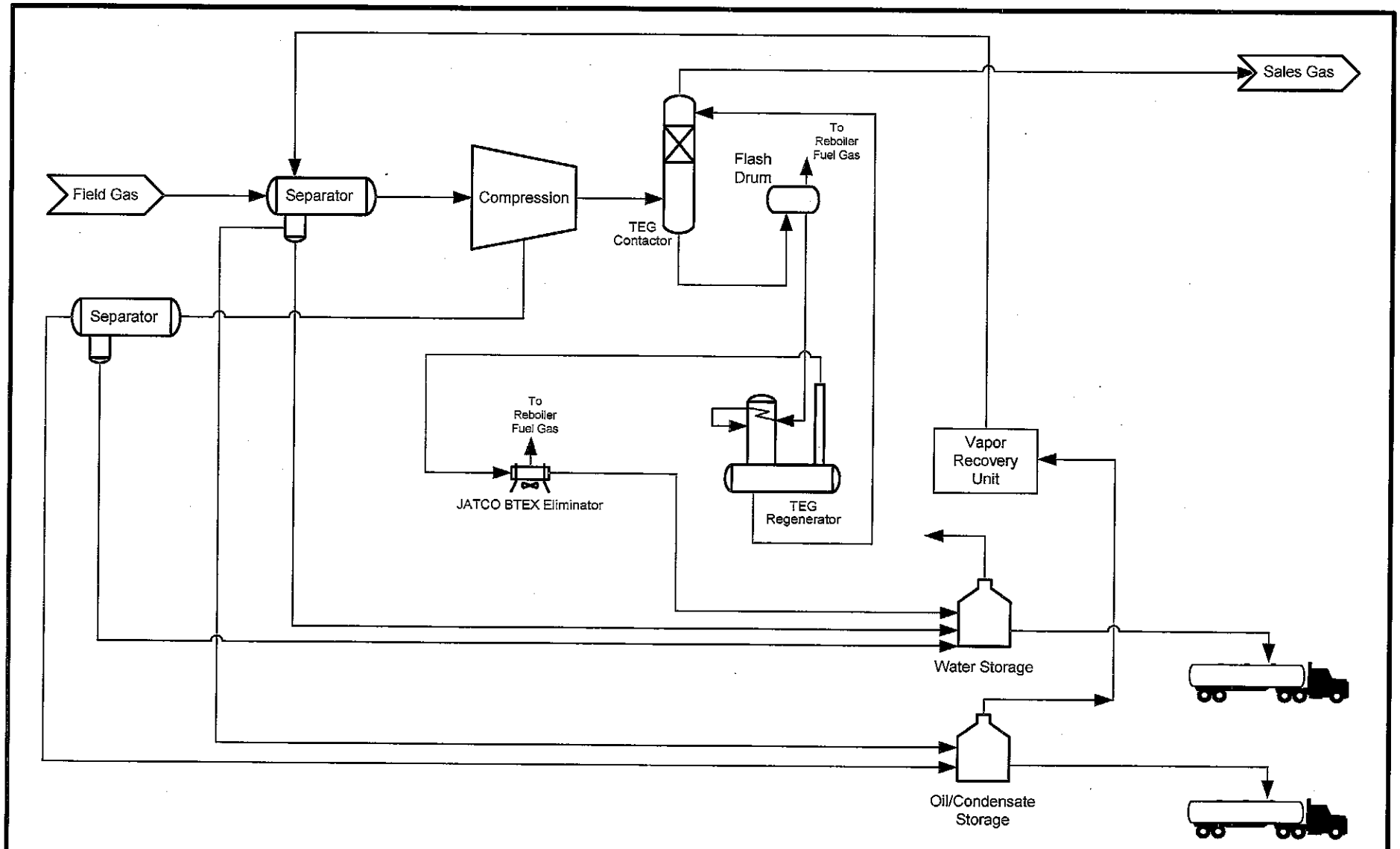

Compliance Partners
4038 Timberline Road, Suite 100
Ft. Collins, CO 80525 970/206-4443
www.compliance-partners.com

Rowdy Pipeline, L.L.C.

Uprising Compressor Station

TITLE

Simplified Process Flow Diagram

PROJECT NAME	FILE NAME	SCALE	REVISED	FIGURE NUMBER
Rowdy (Yates): Uprising	Uprising PFD.vsd	None	1/13/2015	3

Attachment B
WDEQ IMPACT Forms

Revised 11/3/2014

WYOMING

Department of Environmental Quality Air Quality Division
Permit Application Form

JAN 2015 RECEIVED AIR QUALITY DIVISION

Is this a revision to an existing application?

Yes _____ No X

Previous Application #:

Date of Application: 1/19/2015

COMPANY INFORMATION:

Company Name: Rowdy Pipeline, LLC

Address: 105 South Fourth Street

City: Artesia State: New Mexico Zip Code: 88210

Country: USA Phone Number:

FACILITY INFORMATION:

Facility Name: Uprising Compressor Station

New Facility or Existing Facility: Existing

Facility Description: Compressor Station

Facility Class: Synthetic Minor Operating Status: Operating

Facility Type: Compressor Station

For Oil & Gas Production Sites ONLY:

First Date of Production (FDOP)/Date of Modification:

Does production at this facility contain H2S?*

If yes, contact the Division.

API Number(s):

NAICS Code: 486210 Pipeline Transportation of Natural Gas

FACILITY LOCATION:

***Enter the facility location in either the latitude/longitude area or section/township/range area. Both are not required.**

Physical Address:

City: Zip Code:

State: WY County:

OR

Latitude: 43.578478 N Longitude: 105.510846 W County: Campbell

Quarter Quarter: SW Quarter: SE

Section: 28 Township: 42N Range: 72W

For longitude and latitude, use NAD 83/WGS84 datum and 5 digits after the decimal (i.e. 41.12345, -107.56789)

CONTACT INFORMATION:

***Note that an Environmental AND NSR Permitting Contact is required for your application to be deemed complete by the agency.**

Title: Mr. First Name: Kerry

Last Name: Egan

Company Name: Rowdy Pipeline, LLC

Job Title: Engineering Technician

Address: 105 South Fourth Street

City: Astesia State: New Mexico

Zip Code: 88210

Primary Phone No.: 575-748-4555 E-mail: Kegan@yatespetroleum.com

Mobile Phone No.: 575-513-8988 Fax No.:

Contact Type: Environmental contact Start Date:

Revised 11/3/2014

Additional Contact Type (if needed): NSR Permitting contact

Title: Mr. First Name: Kerry

Last Name: Egan

Company Name: Rowdy Pipeline, LLC

Job Title: Engineering Technician

Address: 105 South Fourth Street

City: Artesia State: New Mexico

Zip Code: 88210

Primary Phone No.: 575-748-4555 E-mail: Kegan@yatespetroleum.com

Mobile Phone No.: 575-513-8988 Fax No.:

Contact Type: NSR Permitting contact Start Date:

FACILITY APPLICATION INFORMATION:

General Info:

Has the facility changed location or is it a new/ greenfield facility?	No
Has a Land Use Planning document been included in this application?	No
Is the facility located in a sage grouse core area?*	No
If the facility is in a sage grouse core area, what is the WER number?	

** For questions about sage grouse core area, contact WY Game & Fish Department.*

Federal Rules Applicability - Facility Level:

Prevention of Significant Deterioration (PSD):	No
Non-Attainment New Source Review:	No

Modeling Section:

Has the Air Quality Division been contacted to determine if modeling is required?	Yes
Is a modeling analysis part of this application?	No
Is the proposed project subject to Prevention of Significant Deterioration (PSD) requirements?	No
Has the Air Quality Division been notified to schedule a pre-application meeting?	No
Has a modeling protocol been submitted to and approved by the Air Quality Division?	No
Has the Air Quality Division received a Q/D analysis to submit to the respective FLMs to determine the need for an AQRV analysis?	No

Required Attachments:

Facility Map	☑
Process Flow Diagram	☑
Modeling Analysis (if applicable)	☐
Land Use Planning Document	☐
Detailed Project Description	☑
Emissions Calculations	☑

I, Kerry Egan (Responsible Official (Printed Name)) Engineering Technician (Title)

an Official Representative of the Company, state that I have knowledge of the facts herein set forth and that the same are true and correct to the best of my knowledge and belief. I further certify that the operational information provided and emission rates listed on this application reflect the anticipated emissions due to the operation of this facility. The facility will operate in compliance with all applicable Wyoming Air Quality Standards and Regulations.

Signature: Kerry Egan (ink) Date: 1/27/15

Specific Emission Unit Attributes:

Storage Tank/Silo

Company Equipment ID: **T1 & T2**
Company Equipment Description: **Condensate Bullet Tanks**

Operating Status: **Not Yet Installed**
Initial Construction Commencement Date: **TBD**
Initial Operation Commencement Date: **TBD**
Most Recent Construction/ Modification **TBD**
Most Recent Operation Commencement Date: **TBD**

Select reason(s) for this emissions unit being included in this application (must be completed regardless of date of installation or modification):

Reason: **Modification**

If reason is ***Reconstruction*** or ***Temporary Permit*** or ***Other,*** please explain below:

Material Type: **Liquid**
Description of Material Stored: **Condensate**

Capacity: **40,000** Units: **gallons**
Maximum Throughput: **2000** Units: **barrels/day**
Maximum Hourly Throughput: **84** Units: **barrels/hr**
Operating Pressure (psig): **6-10**
Vapor Pressure of Material Stored (psig): **6-10**
Is Tank Heated?: **Yes**

SCC Codes: List all Source Classification Code(s) (SCC) that describe the process(es) performed by the emission source (e.g., 1-02-002-04).

40400340

Potential Operating Schedule: Provide the operating schedule for this emission unit.
Hours/day: **24**
Hours/year: **8760**

Control Equipment: **Yes**
If yes, please fill out and attach the appropriate Control Device and Release Point Information worksheets.

Best Available Control Technology (BACT): Was a BACT Analysis completed for this emission unit?

☐ Yes ☑ No

Pollutant: _____

Proposed BACT: _____

*If yes, attach BACT Analysis with this application.

Lowest Achievable Emission Rate (LAER): Was a LAER Analysis completed for this emission unit?

☐ Yes ☑ No

Pollutant: _____

Proposed LAER: _____

*If yes, attach LAER Analysis with this application.

Federal and State Rule Applicability:

New Source Performance Standards (NSPS): **Not Affected**

New Source Performance Standard are listed under 40 CFR 60-Standards of Performance for New Stationary Sources.

NSPS Subpart: _____

National Emission Standards for Hazardous Air Pollutants (NESHAP Part 61): **Not Affected**

National Emissions Standards for Hazardous Air Pollutants (NESHAP Part 61) are listed under 40 CFR 61. (These include asbestos, benzene, beryllium, mercury, and vinyl chloride).

Part 61 NESHAP Subpart: _____

National Emission Standards for Hazardous Air Pollutants (NESHAP Part 63): **Not Affected**

National Emission Standards for Hazardous Air Pollutants (NESHAP Part 63) standards are listed under 40 CFR 63

Part 63 NESHAP Subpart: _____

Prevention of Significant Deterioration (PSD): **Not Affected**

These rules are found under WAQSR Chapter 6, Section 4.

Non-Attainment New Source Review: **Not Affected**

These rules are found under WAQSR Chapter 6, Section 13.

Revised 11/3/2014

Control Equipment:

Vapor Recovery Unit

Manufacturer: **TBD**

Date Installed: **TBD**

Model Name and Number: **TBD**

Company Control Equipment ID: **VRU**

Company Control Equipment Description: **Vapor Recovery Unit**

Pollutant(s) Controlled:

☐ CO	☐ NOx	☐ Pb	☐ SO2	☑ VOC	☐ PM	
☐ PM (FIL)	☐ PM Condensible	☐ PM 10 (FIL)	☐ PM 2.5 (FIL)	☐ PM 10	☐ PM 2.5	
☐ Other						

NOTE: The following fields require numeric values unless otherwise denoted with an asterisk*

Design Control Efficiency (%): **100**

Capture Efficiency (%): **100**

Operating Control Efficiency (%): **TBD**

☑ This is the only control equipment on this air contaminant source

If not, this control equipment is: ☐ Primary ☐ Secondary ☐ Parallel

List all other emission units that are also vented to this control equipment:* **Condensate Tanks**

List all release point IDs associated with this control equipment:* **N/A**

Specific Emission Unit Attributes:

Process Vent

Company Equipment ID: RP

Company Equipment Description: Rod Packing Vents

Operating Status: Operating

Initial Construction Commencement Date: unknown

Initial Operation Commencement Date: unknown

Most Recent Construction/ Modification: unknown

Most Recent Operation Commencement: unknown

Select reason(s) for this emissions unit being included in this application (must be completed regardless of date of installation or modification):

Reason: Modification

If reason is ***Reconstruction*** or ***Temporary Permit*** or ***Other,*** please explain below:

Flow Rate or Throughput: 50 Units: scf/hr

VOC Concentration (%): 19.7 HAPs Concentration (%): 0.657

SCC Codes: List all Source Classification Code(s) (SCC) that describe the process(es) performed by the emission source (e.g., 1-02-002-04).

31000309

Potential Operating Schedule: Provide the operating schedule for this emission unit.

Hours/day: 24

Hours/year: 8760

Control Equipment: No

If yes, please fill out and attach the appropriate Control Device and Release Point Information worksheets.

Best Available Control Technology (BACT): Was a BACT Analysis completed for this emission unit?

☐ Yes ☑ No

Pollutant:

Proposed BACT:

*If yes, attach BACT Analysis with this application.

Lowest Achievable Emission Rate (LAER): Was a LAER Analysis completed for this emission unit?

☐ Yes ☑ No

Pollutant:

Proposed LAER:

*If yes, attach LAER Analysis with this application.

Federal and State Rule Applicability:

New Source Performance Standards (NSPS): **Subject to subpart**

New Source Performance Standard are listed under 40 CFR 60-
Standards of Performance for New Stationary Sources.

NSPS Subpart: ***Subpart OOOO may apply depending on Compressor manufacture dates***

National Emission Standards for Hazardous Air Pollutants (NESHAP Part 61): **Not Affected**

National Emissions Standards for Hazardous Air Pollutants (NESHAP Part 61) are listed under 40 CFR 61. (These include asbestos, benzene, beryllium, mercury, and vinyl chloride).

Part 61 NESHAP Subpart: _____

National Emission Standards for Hazardous Air Pollutants (NESHAP Part 63): **Not Affected**

National Emission Standards for Hazardous Air Pollutants (NESHAP Part 63) standards are listed under 40 CFR 63

Part 63 NESHAP Subpart: _____

Prevention of Significant Deterioration (PSD): **Not Affected**

These rules are found under WAQSR Chapter 6, Section 4.

Non-Attainment New Source Review: **Not Affected**

These rules are found under WAQSR Chapter 6, Section 13.

Emissions Information- The following tables request information needed to determine the applicable requirements and the compliance status of this emission unit with those requirements.

Criteria Pollutants:

		Pre-Controlled Potential Emissions (tons/yr)	Efficiency Standards: Potential to Emit (PTE)	Efficiency Standards: Units	Potential to Emit (lbs/hr)	Potential to Emit (tons/yr)	Basis for Determination
1.)	Particulate emissions (PE/PM) (formerly particulate matter, PM)						
2.)	PM #10 microns in diameter (PE/PM10)						
3.)	PM #2.5 microns in diameter (PE/PM2.5)						
4.)	Sulfur dioxide (SO2)						
5.)	Nitrogen Oxides (NOx)						
6.)	Carbon monoxide (CO)						
7.)	Volatile organic compounds (VOC)	**24.63**			**5.623288**	**24.63**	**Other**
8.)	Lead (Pb)						
9.)	Total Hazardous Air Pollutants (HAPs)	**1.28**			**0.292237**	**1.28**	**Other**
10.)	Fluoride (F)						
11.)	Hydrogen Sulfide (H2S)						
12.)	Mercury (Hg)						
13.)	Total Reduced Sulfur (TRS)						
14.)	Sulfuric Acid Mist (SAM)						

Provide your calculations as an attachment and explain how all process variables and emissions factors were selected.

Hazardous Air Pollutants (HAPs) and Toxic Air Contaminents

Pollutants:

		Pre-Controlled Potential Emissions (tons/yr)	Efficiency Standards: Potential to Emit (PTE)	Efficiency Standards: Units	Potential to Emit (lbs/hr)	Potential to Emit (tons/yr)	Basis for Determination
1.)	**n-hexane**	**0.46**			**0.105023**	**0.46**	**Other**
2.)	**2,2,4-trimethylpentane**	**0.24**			**0.054795**	**0.24**	**Other**
3.)	**Benzene**	**0.06**			**0.013699**	**0.06**	**Other**
4.)	**Toluene**	**0.13**			**0.02968**	**0.13**	**Other**
5.)	**Ethylbenzene**	**0.11**			**0.025114**	**0.11**	**Other**
6.)	**Xylene**	**0.29**			**0.06621**	**0.29**	**Other**
7.)							
8.)							

Greenhouse Gases (GHGs)

Pollutants:		Pre-Controlled Potential Emissions (tons/yr)	Efficiency Standards: Potential to Emit (PTE)	Efficiency Standards: Units	Potential to Emit (lbs/hr)	Potential to Emit (tons/yr)	Basis for Determination
1.)	Carbon Dioxide	**1.1**			**0.251142**	**1.1**	**Other**
2.)	Methane	**21.33**			**4.869863**	**21.33**	**Other**
3.)	CO_2e	**534.35**			**121.9977**	**534.35**	**Other**
4.)							
5.)							
6.)							
7.)							
8.)							

Specific Emission Unit Attributes:

Storage Tank/Silo

Company Equipment ID: T3-T4
Company Equipment Description: Produced water tanks

Operating Status: Operating
Initial Construction Commencement Date: unknown
Initial Operation Commencement Date: unknown
Most Recent Construction/ Modification unknown
Most Recent Operation Commencement Date: unknown

Select reason(s) for this emissions unit being included in this application (must be completed regardless of date of installation or modification):

Reason: Modification

If reason is ***Reconstruction*** or ***Temporary Permit*** or ***Other,*** please explain below:

Material Type: Liquid
Description of Material Stored: Produced water

Capacity: 400 Units: barrels
Maximum Throughput: 200 Units: barrels/day
Maximum Hourly Throughput: 200 Units: barrels/hr
Operating Pressure (psig): 0
Vapor Pressure of Material Stored (psig): ~0
Is Tank Heated?: No

SCC Codes: List all Source Classification Code(s) (SCC) that describe the process(es) performed by the emission source (e.g., 1-02-002-04).

40400315

Potential Operating Schedule: Provide the operating schedule for this emission unit.
Hours/day: 24
Hours/year: 8760

Control Equipment: No
If yes, please fill out and attach the appropriate Control Device and Release Point Information worksheets.

Best Available Control Technology (BACT): Was a BACT Analysis completed for this emission unit?

☐ Yes ☑ No

Pollutant: _____

Proposed BACT: _____

*If yes, attach BACT Analysis with this application.

Lowest Achievable Emission Rate (LAER): Was a LAER Analysis completed for this emission unit?

☐ Yes ☑ No

Pollutant: _____

Proposed LAER: _____

*If yes, attach LAER Analysis with this application.

Federal and State Rule Applicability:

New Source Performance Standards (NSPS): **Not Affected**

New Source Performance Standard are listed under 40 CFR 60-Standards of Performance for New Stationary Sources.

NSPS Subpart: _____

National Emission Standards for Hazardous Air Pollutants (NESHAP Part 61): **Not Affected**

National Emissions Standards for Hazardous Air Pollutants (NESHAP Part 61) are listed under 40 CFR 61. (These include asbestos, benzene, beryllium, mercury, and vinyl chloride).

Part 61 NESHAP Subpart: _____

National Emission Standards for Hazardous Air Pollutants (NESHAP Part 63): **Not Affected**

National Emission Standards for Hazardous Air Pollutants (NESHAP Part 63) standards are listed under 40 CFR 63

Part 63 NESHAP Subpart: _____

Prevention of Significant Deterioration (PSD): **Not Affected**

These rules are found under WAQSR Chapter 6, Section 4.

Non-Attainment New Source Review: **Not Affected**

These rules are found under WAQSR Chapter 6, Section 13.

Emissions Information- The following tables request information needed to determine the applicable requirements and the compliance status of this emission unit with those requirements.

		Pre-Controlled Potential Emissions (tons/yr)	Efficiency Standards: Potential to Emit (PTE)	Efficiency Standards: Units	Potential to Emit (lbs/hr)	Potential to Emit (tons/yr)	Basis for Determination
Criteria Pollutants:							
1.)	Particulate emissions (PE/PM) (formerly particulate matter, PM)						
2.)	PM #10 microns in diameter (PE/PM10)						
3.)	PM #2.5 microns in diameter (PE/PM2.5)						
4.)	Sulfur dioxide (SO2)						
5.)	Nitrogen Oxides (NOx)						
6.)	Carbon monoxide (CO)						
7.)	Volatile organic compounds (VOC)	**0.29**			**0.066**	**0.29**	**Tanks Program**
8.)	Lead (Pb)						
9.)	Total Hazardous Air Pollutants (HAPs)	**0.0017**			**0.000388**	**0.0017**	**Tanks Program**
10.)	Fluoride (F)						
11.)	Hydrogen Sulfide (H2S)						
12.)	Mercury (Hg)						
13.)	Total Reduced Sulfur (TRS)						
14.)	Sulfuric Acid Mist (SAM)						

Provide your calculations as an attachment and explain how all process variables and emissions factors were selected.

Hazardous Air Pollutants (HAPs) and Toxic Air Contaminents

		Pre-Controlled Potential Emissions (tons/yr)	Efficiency Standards: Potential to Emit (PTE)	Efficiency Standards: Units	Potential to Emit (lbs/hr)	Potential to Emit (tons/yr)	Basis for Determination
Pollutants:							
1.)	**n-hexane**	**0.0005**			**0.000114**	**0.0005**	**Tanks Program**
2.)	**2,2,4-trimethylpentane**	**0.000005**			**1.14E-06**	**0.000005**	**Tanks Program**
3.)	**Benzene**	**0.0008**			**0.000183**	**0.0008**	**Tanks Program**
4.)	**Toluene**	**0.0003**			**6.85E-05**	**0.0003**	**Tanks Program**
5.)	**Ethylbenzene**	**0.0001**			**2.28E-05**	**0.0001**	**Tanks Program**
6.)	**Xylene**	**0.0001**			**2.28E-05**	**0.0001**	**Tanks Program**
7.)							
8.)							

Greenhouse Gases (GHGs)

Pollutants:		Pre-Controlled Potential Emissions (tons/yr)	Efficiency Standards: Potential to Emit (PTE)	Efficiency Standards: Units	Potential to Emit (lbs/hr)	Potential to Emit (tons/yr)	Basis for Determination
1.)							
2.)							
3.)							
4.)							
5.)							
6.)							
7.)							
8.)							

Specific Emission Unit Attributes:

Boiler

Company Equipment ID: H1

Company Equipment Description: Line Heater

Operating Status: Not Yet Installed

Initial Construction Commencement Date: TBD

Initial Operation Commencement Date: TBD

Most Recent Construction/ Modification TBD

Most Recent Operation Commencement TBD

Select reason(s) for this emissions unit being included in this application (must be completed regardless of date of installation or modification):

Reason: Modification

If reason is ***Reconstruction*** or ***Temporary Permit*** or ***Other,*** please explain below:

Heat Input Rating (MMBtu/hr): 1.5

Primary Fuel Type: Pipeline Grade Natural Gas

Secondary Fuel Type:

Model Name and Number: TBD

Serial Number Tracking Table: TBD

Manufacturer Name: TBD

Serial Number: TBD

Effective Date:

Boiler Type: Package Boiler

Type of Service: Industrial

Btu Content: 1220

Units: BTU/scf

Fuel Sulfur Content: 4

Units: ppm

Fuel Ash Content (%):

SCC Codes: List all Source Classification Code(s) (SCC) that describe the process(es) performed by the emission source (e.g., 1-02-002-04).

31000404

Potential Operating Schedule: Provide the operating schedule for this emission unit.

Hours/day: 24

Hours/year: 8760

Control Equipment: No

If yes, please fill out and attach the appropriate Control Device and Release Point Information worksheets.

Best Available Control Technology (BACT): Was a BACT Analysis completed for this emission unit?

☐ Yes ☑ No

Pollutant:

Proposed BACT:

*If yes, attach BACT Analysis with this application.

Lowest Achievable Emission Rate (LAER): Was a LAER Analysis completed for this emission unit?

☐ Yes ☑ No

Pollutant: _____

Proposed LAER: _____

*If yes, attach LAER Analysis with this application.

Federal and State Rule Applicability:

New Source Performance Standards (NSPS): Not Affected

New Source Performance Standard are listed under 40 CFR 60-Standards of Performance for New Stationary Sources.

NSPS Subpart: _____

National Emission Standards for Hazardous Air Pollutants (NESHAP Part 61): Not Affected

National Emissions Standards for Hazardous Air Pollutants (NESHAP Part 61) are listed under 40 CFR 61. (These include asbestos, benzene, beryllium, mercury, and vinyl chloride).

Part 61 NESHAP Subpart: _____

National Emission Standards for Hazardous Air Pollutants (NESHAP Part 63): Not Affected

National Emission Standards for Hazardous Air Pollutants (NESHAP Part 63) standards are listed under 40 CFR 63

Part 63 NESHAP Subpart: _____

Prevention of Significant Deterioration (PSD): Not Affected

These rules are found under WAQSR Chapter 6, Section 4.

Non-Attainment New Source Review: Not Affected

These rules are found under WAQSR Chapter 6, Section 13.

Emissions Information- The following tables request information needed to determine the applicable requirements and the compliance status of this emission unit with those requirements.

Criteria Pollutants:

		Pre-Controlled Potential Emissions (tons/yr)	Efficiency Standards: Potential to Emit (PTE)	Efficiency Standards: Units	Potential to Emit (lbs/hr)	Potential to Emit (tons/yr)	Basis for Determination
1.)	Particulate emissions (PE/PM) (formerly particulate matter, PM)	0.049	0.007	lb/MMBtu	0.011	0.049	AP-42
2.)	PM #10 microns in diameter (PE/PM10)	0.037	0.006	lb/MMBtu	0.008	0.037	AP-42
3.)	PM #2.5 microns in diameter (PE/PM2.5)	0.012	0.002	lb/MMBtu	0.003	0.012	AP-42
4.)	Sulfur dioxide (SO2)	0.004	0.001	lb/MMBtu	0.001	0.004	AP-42
5.)	Nitrogen Oxides (NOx)	0.644	0.098	lb/MMBtu	0.147	0.644	AP-42
6.)	Carbon monoxide (CO)	0.541	0.082	lb/MMBtu	0.124	0.541	AP-42
7.)	Volatile organic compounds (VOC)	0.035	0.005	lb/MMBtu	0.008	0.035	AP-42
8.)	Lead (Pb)						
9.)	Total Hazardous Air Pollutants (HAPs)	0.00048	0.00007	lb/MMBtu	0.00011	0.00048	AP-42
10.)	Fluoride (F)						
11.)	Hydrogen Sulfide (H2S)						
12.)	Mercury (Hg)						
13.)	Total Reduced Sulfur (TRS)						
14.)	Sulfuric Acid Mist (SAM)						

Provide your calculations as an attachment and explain how all process variables and emissions factors were selected.

Hazardous Air Pollutants (HAPs) and Toxic Air Contaminants

Pollutants:

		Pre-Controlled Potential Emissions (tons/yr)	Efficiency Standards: Potential to Emit (PTE)	Efficiency Standards: Units	Potential to Emit (lbs/hr)	Potential to Emit (tons/yr)	Basis for Determination
1.)	Formaldehyde	0.00048	0.00007	lb/MMBtu	0.00011	0.00048	AP-42
2.)							
3.)							
4.)							
5.)							
6.)							
7.)							
8.)							

Greenhouse Gases (GHGs)

Pollutants:		Pre-Controlled Potential Emissions (tons/yr)	Efficiency Standards: Potential to Emit (PTE)	Efficiency Standards: Units	Potential to Emit (lbs/hr)	Potential to Emit (tons/yr)	Basis for Determination
1.)	**Carbon Dioxide**	**768**	**116.9**	**lb/MMBtu**	**175.3**	**768**	**Other**
2.)	**Methane**	**0.014**	**0.0022**	**lb/MMBtu**	**0.0033**	**0.014**	**Other**
3.)	**Nitrous Oxide**	**0.0014**	**0.00022**	**lb/MMBtu**	**0.00033**	**0.0014**	**Other**
4.)							
5.)							
6.)							
7.)							
8.)							

Specific Emission Unit Attributes:

Flare

Company Equipment ID: FL2
Company Equipment Description: Low Pressure Flare

Operating Status: Not Yet Installed
Initial Construction Commencement Date: TBD
Initial Operation Commencement Date: TBD
Most Recent Construction/ Modification TBD
Most Recent Operation Commencement Date: TBD

Select reason(s) for this emissions unit being included in this application (must be completed regardless of date of installation or modification):

Reason: Modification

If reason is ***Reconstruction*** or ***Temporary Permit*** or ***Other,*** please explain below:

Maximum Design Capacity (MMSCF/hr): TBD
Minimum Design Capacity (MMSCF/hr): TBD
Pilot Gas Volume (scf/min): 0.833
Emergency Flare Only: No
Ignition Device Type: Pilot
Btu Content (Btu/scf): 2671.5
Smokeless Design: Yes
Assist Gas Utilized? Yes
Continuously Monitored? Yes
Waste Gas Volume: 276.14
Units: scf/hr
Installation Date: TBD

SCC Codes: List all Source Classification Code(s) (SCC) that describe the process(es) performed by the emission source (e.g., 1-02-002-04).

31000205, 31000215

Potential Operating Schedule: Provide the operating schedule for this emission unit.
Hours/day: 24
Hours/year: 8760

Control Equipment: No
If yes, please fill out and attach the appropriate Control Device and Release Point Information worksheets.

Best Available Control Technology (BACT): Was a BACT Analysis completed for this emission unit?
☐ Yes ☑ No
Pollutant:
Proposed BACT:
*If yes, attach BACT Analysis with this application.

Lowest Achievable Emission Rate (LAER): Was a LAER Analysis completed for this emission unit?

☐ Yes ☑ No

Pollutant: _____

Proposed LAER: _____

*If yes, attach LAER Analysis with this application.

Federal and State Rule Applicability:

New Source Performance Standards (NSPS): **Not Affected**

New Source Performance Standard are listed under 40 CFR 60-Standards of Performance for New Stationary Sources.

NSPS Subpart: _____

National Emission Standards for Hazardous Air Pollutants (NESHAP Part 61): **Not Affected**

National Emissions Standards for Hazardous Air Pollutants (NESHAP Part 61) are listed under 40 CFR 61. (These include asbestos, benzene, beryllium, mercury, and vinyl chloride).

Part 61 NESHAP Subpart: _____

National Emission Standards for Hazardous Air Pollutants (NESHAP Part 63): **Not Affected**

National Emission Standards for Hazardous Air Pollutants (NESHAP Part 63) standards are listed under 40 CFR 63

Part 63 NESHAP Subpart: _____

Prevention of Significant Deterioration (PSD): **Not Affected**

These rules are found under WAQSR Chapter 6, Section 4.

Non-Attainment New Source Review: **Not Affected**

These rules are found under WAQSR Chapter 6, Section 13.

Control Equipment:

Flare/Combustor

Manufacturer:	TBD	Date Installed:	TBD
Model Name and Number:	TBD	Company Control Equipment ID:	FL2
Company Control Equipment Description:	Low Pressure flare		

Pollutant(s) Controlled:

☐ CO	☐ NOx	☐ Pb	☐ SO2	☑ VOC	☐ PM	
☐ PM (FIL)	☐ PM Condensible	☐ PM 10 (FIL)	☐ PM 2.5 (FIL)	☐ PM 10	☐ PM 2.5	
Other						

NOTE: The following fields require numeric values unless otherwise denoted with an asterisk*

Maximum Design Capacity (MMSCF/hr):	TBD		
Minimum Design Capacity (MMSCF/hr):	TBD		
Design Control Efficiency (%):	98	Capture Efficiency (%):	
Operating Control Efficiency (%):	98		
Flare Type:*	Elevated- Open	**Elevated Flare Type:***	Air-Assisted
Ignition Device:*	Yes	**Flame Presence Sensor:***	Yes
Inlet Gas Temp (F):	60	**Flame Presence Type:***	Thermocouple
Gas Flow Rate (acfm):	4.602333333	Outlet Gas Temp (F):	1832

☑ This is the only control equipment on this air contaminant source

If not, this control equipment is: ☐ Primary ☐ Secondary ☐ Parallel

List all other emission units that are also vented to this control equipment:*	T1-T2
List all release point IDs associated with this control equipment:*	FL2

Emissions Information- The following tables request information needed to determine the applicable requirements and the compliance status of this emission unit with those requirements.

Criteria Pollutants:

		Pre-Controlled Potential Emissions (tons/yr)	Efficiency Standards: Potential to Emit (PTE)	Efficiency Standards: Units	Potential to Emit (lbs/hr)	Potential to Emit (tons/yr)	Basis for Determination
1.)	Particulate emissions (PE/PM) (formerly particulate matter, PM)						
2.)	PM #10 microns in diameter (PE/PM10)						
3.)	PM #2.5 microns in diameter (PE/PM2.5)						
4.)	Sulfur dioxide (SO2)						
5.)	Nitrogen Oxides (NOx)	0	0.14	lb/MMBtu	0.10274	0.45	AP-42
6.)	Carbon monoxide (CO)	0	0.035	lb/MMBtu	0.025114	0.11	AP-42
7.)	Volatile organic compounds (VOC)	147.63			0.673516	2.95	Other
8.)	Lead (Pb)						
9.)	Total Hazardous Air Pollutants (HAPs)	10.84			0.050228	0.22	Other
10.)	Fluoride (F)						
11.)	Hydrogen Sulfide (H2S)						
12.)	Mercury (Hg)						
13.)	Total Reduced Sulfur (TRS)						
14.)	Sulfuric Acid Mist (SAM)						

Provide your calculations as an attachment and explain how all process variables and emissions factors were selected.

Hazardous Air Pollutants (HAPs) and Toxic Air Contaminants

Pollutants:

		Pre-Controlled Potential Emissions (tons/yr)	Efficiency Standards: Potential to Emit (PTE)	Efficiency Standards: Units	Potential to Emit (lbs/hr)	Potential to Emit (tons/yr)	Basis for Determination
1.)	n-Hexane	3.54			0.015982	0.07	Other
2.)	2,2,4-trimethylpentane	0.39			0.001758	0.0077	Other
3.)	Benzene	3.38			0.015434	0.0676	Other
4.)	Toluene	2.94			0.013425	0.0588	Other
5.)	ethylbenzene	0.18			0.000845	0.0037	Other
6.)	Xylenes	0.41			0.001895	0.0083	Other
7.)	Formaldehyde	0	0.075	lb/MMscf	2.05E-05	0.00009	AP-42
8.)							

Greenhouse Gases (GHGs)

Pollutants:		Pre-Controlled Potential Emissions (tons/yr)	Efficiency Standards: Potential to Emit (PTE)	Efficiency Standards: Units	Potential to Emit (lbs/hr)	Potential to Emit (tons/yr)	Basis for Determination
1.)	**Carbon Dioxide**	**1.67**			**109.9498**	**481.58**	**Other**
2.)	**Methane**	**5.81**			**0.027397**	**0.12**	**Other**
3.)	**N_2O**	**0**	**0.0001**	**kg/Mmbtu**	**0.000162**	**0.00071**	**Other**
4.)	**CO_2e**	**146.92**			**110.683**	**484.7916**	**Other**
5.)							
6.)							
7.)							
8.)							

Specific Emission Unit Attributes:

Flare

Company Equipment ID: FL1
Company Equipment Description: High pressure Flare

Operating Status: Not Yet Installed
Initial Construction Commencement Date: TBD
Initial Operation Commencement Date: TBD
Most Recent Construction/ Modification TBD
Most Recent Operation Commencement Date: TBD

Select reason(s) for this emissions unit being included in this application (must be completed regardless of date of installation or modification):

Reason: Modification

If reason is ***Reconstruction*** or ***Temporary Permit*** or ***Other,*** please explain below:

Maximum Design Capacity (MMSCF/hr): TBD
Minimum Design Capacity (MMSCF/hr): TBD
Pilot Gas Volume (scf/min): 0.8333
Emergency Flare Only: No
Ignition Device Type: Pilot
Btu Content (Btu/scf): 1601
Smokeless Design: Yes
Assist Gas Utilized? Yes
Continuously Monitored? Yes
Waste Gas Volume: 315
Units: scf/hr
Installation Date: TBD

SCC Codes: List all Source Classification Code(s) (SCC) that describe the process(es) performed by the emission source (e.g., 1-02-002-04).

31000205, 31000215

Potential Operating Schedule: Provide the operating schedule for this emission unit.

Hours/day: 24
Hours/year: 8760

Control Equipment: No

If yes, please fill out and attach the appropriate Control Device and Release Point Information worksheets.

Best Available Control Technology (BACT): Was a BACT Analysis completed for this emission unit?

☐ Yes ☑ No

Pollutant: _____

Proposed BACT: _____

*If yes, attach BACT Analysis with this application.

Lowest Achievable Emission Rate (LAER): Was a LAER Analysis completed for this emission unit?

☐ Yes ☑ No

Pollutant: _____

Proposed LAER: _____

*If yes, attach LAER Analysis with this application.

Federal and State Rule Applicability:

New Source Performance Standards (NSPS): **Not Affected**

New Source Performance Standard are listed under 40 CFR 60-Standards of Performance for New Stationary Sources.

NSPS Subpart: _____

National Emission Standards for Hazardous Air Pollutants (NESHAP Part 61): **Not Affected**

National Emissions Standards for Hazardous Air Pollutants (NESHAP Part 61) are listed under 40 CFR 61. (These include asbestos, benzene, beryllium, mercury, and vinyl chloride).

Part 61 NESHAP Subpart: _____

National Emission Standards for Hazardous Air Pollutants (NESHAP Part 63): **Not Affected**

National Emission Standards for Hazardous Air Pollutants (NESHAP Part 63) standards are listed under 40 CFR 63

Part 63 NESHAP Subpart: _____

Prevention of Significant Deterioration (PSD): **Not Affected**

These rules are found under WAQSR Chapter 6, Section 4.

Non-Attainment New Source Review: **Not Affected**

These rules are found under WAQSR Chapter 6, Section 13.

Control Equipment:

Flare/Combustor

Manufacturer:	TBD	Date Installed:	TBD
Model Name and Number:	TBD	Company Control Equipment ID:	FL1
Company Control Equipment Description:	FL1 (high pressure flare)		

Pollutant(s) Controlled:

☐ CO	☐ NOx	☐ Pb	☐ SO2	☑ VOC	☐ PM	
☐ PM (FIL)	☐ PM Condensible	☐ PM 10 (FIL)	☐ PM 2.5 (FIL)	☐ PM 10	☐ PM 2.5	
☐ Other						

NOTE: The following fields require numeric values unless otherwise denoted with an asterisk*

Maximum Design Capacity (MMSCF/hr):	TBD		
Minimum Design Capacity (MMSCF/hr):	TBD		
Design Control Efficiency (%):	98	Capture Efficiency (%):	
Operating Control Efficiency (%):	98		
Flare Type:*	Elevated- Open	**Elevated Flare Type:***	Air-Assisted
Ignition Device:*	Yes	**Flame Presence Sensor:***	Yes
Inlet Gas Temp (F):	60	**Flame Presence Type:***	Thermocouple
Gas Flow Rate (acfm):	5.25	Outlet Gas Temp (F):	1832

☑ This is the only control equipment on this air contaminant source

If not, this control equipment is: ☐ Primary ☐ Secondary ☐ Parallel

List all other emission units that are also vented to this control equipment:* BD

List all release point IDs associated with this control equipment:* FL1

Emissions Information- The following tables request information needed to determine the applicable requirements and the compliance status of this emission unit with those requirements.

Criteria Pollutants:

		Pre-Controlled Potential Emissions (tons/yr)	Efficiency Standards: Potential to Emit (PTE)	Efficiency Standards: Units	Potential to Emit (lbs/hr)	Potential to Emit (tons/yr)	Basis for Determination
1.)	Particulate emissions (PE/PM) (formerly particulate matter, PM)						
2.)	PM #10 microns in diameter (PE/PM10)						
3.)	PM #2.5 microns in diameter (PE/PM2.5)						
4.)	Sulfur dioxide (SO2)						
5.)	Nitrogen Oxides (NOx)	0	0.14	lb/MMBtu	0.070776	0.31	
6.)	Carbon monoxide (CO)	0	0.035	lb/MMBtu	0.018265	0.08	
7.)	Volatile organic compounds (VOC)	62.55			0.285388	1.25	
8.)	Lead (Pb)						
9.)	Total Hazardous Air Pollutants (HAPs)	10.16			0.045662	0.2	
10.)	Fluoride (F)						
11.)	Hydrogen Sulfide (H2S)						
12.)	Mercury (Hg)						
13.)	Total Reduced Sulfur (TRS)						
14.)	Sulfuric Acid Mist (SAM)						

Provide your calculations as an attachment and explain how all process variables and emissions factors were selected.

Hazardous Air Pollutants (HAPs) and Toxic Air Contaminents

Pollutants:

		Pre-Controlled Potential Emissions (tons/yr)	Efficiency Standards: Potential to Emit (PTE)	Efficiency Standards: Units	Potential to Emit (lbs/hr)	Potential to Emit (tons/yr)	Basis for Determination
1.)	n-hexane	2.25			0.009132	0.04	Other
2.)	2,2,4 Trimethylpentan	0.47			0.002055	0.009	Other
3.)	Benzene	3.36			0.015982	0.07	Other
4.)	Toluene	3.03			0.013699	0.06	Other
5.)	EthylBenzene	0.31			0.00137	0.006	Other
6.)	Xylene	0.75			0.003425	0.015	Other
7.)	formaldehyde	0	0.075	lb/MMscf	2.28E-05	0.0001	Other
8.)							

Greenhouse Gases (GHGs)

Pollutants:		Pre-Controlled Potential Emissions (tons/yr)	Efficiency Standards: Potential to Emit (PTE)	Efficiency Standards: Units	Potential to Emit (lbs/hr)	Potential to Emit (tons/yr)	Basis for Determination
1.)	Carbon Dioxide	2.99			72.4863	317.49	Other
2.)	Methane	33.12			0.150685	0.66	Other
3.)	N_2O	0	0.0001	kg/MMBtu	0.000112	0.00049	Other
4.)	CO_2e	830.99			76.28676	334.136	Other
5.)							
6.)							
7.)							
8.)							

Specific Emission Unit Attributes:

Blowdown/Venting/Well Completion

Company Equipment ID: **BD**

Company Equipment Description: **Compressor Blowdown**

Operating Status: **Operating**

Initial Construction Commencement Date: **unknown**

Initial Operation Commencement Date: **unknown**

Most Recent Construction/ Modification **unknown**

Most Recent Operation Commencement Date: **unknown**

Select reason(s) for this emissions unit being included in this application (must be completed regardless of date of installation or modification):

Reason: **Modification**

If reason is ***Reconstruction*** or ***Temporary Permit*** or ***Other,*** please explain below:

Type of Event: **Blow-down**

SCC Codes: List all Source Classification Code(s) (SCC) that describe the process(es) performed by the emission source (e.g., 1-02-002-04).

30600402

Potential Operating Schedule: Provide the operating schedule for this emission unit.

Hours/day: **24**

Hours/year: **8760**

Control Equipment: **Yes**

If yes, please fill out and attach the appropriate Control Device and Release Point Information worksheets.

Best Available Control Technology (BACT): Was a BACT Analysis completed for this emission unit?

☐ Yes ☑ No

Pollutant:

Proposed BACT:

*If yes, attach BACT Analysis with this application.

Lowest Achievable Emission Rate (LAER): Was a LAER Analysis completed for this emission unit?

☐ Yes ☑ No

Pollutant:

Proposed LAER:

*If yes, attach LAER Analysis with this application.

Federal and State Rule Applicability:

New Source Performance Standards (NSPS): **Not Affected**

New Source Performance Standard are listed under 40 CFR 60-Standards of Performance for New Stationary Sources.

NSPS Subpart: _____

National Emission Standards for Hazardous Air Pollutants (NESHAP Part 61): **Not Affected**

National Emissions Standards for Hazardous Air Pollutants (NESHAP Part 61) are listed under 40 CFR 61. (These include asbestos, benzene, beryllium, mercury, and vinyl chloride).

Part 61 NESHAP Subpart: _____

National Emission Standards for Hazardous Air Pollutants (NESHAP Part 63): **Not Affected**

National Emission Standards for Hazardous Air Pollutants (NESHAP Part 63) standards are listed under 40 CFR 63

Part 63 NESHAP Subpart: _____

Prevention of Significant Deterioration (PSD): **Not Affected**

These rules are found under WAQSR Chapter 6, Section 4.

Non-Attainment New Source Review: **Not Affected**

These rules are found under WAQSR Chapter 6, Section 13.

Revised 11/3/2014

Release Point Information:

Complete the table below for ***each*** release point. Please include release point information for each emission unit. Multiple attachments may be necessary. A release point is a point at which emissions from an emission unit are released into the ambient (outside)air. List each individual release point on a separate pair of lines (release point ID and description). ***For longitude and latitude, use NAD 83/WGS84 datum and 5 digits after the decimal (i.e. 41.12345, -107.56789)***

Stack Release Point Information		
Company Release Point ID:	Release Point Type:	Vertical
F1	Release Point Latitude:	43.577963 N
	Release Point Longitude:	105.510636 W
Company Release Point Description:	Base Elevation (ft):	4933
	Stack Height (ft):	20
	Stack Diameter (ft):	0.48
High Pressure Flare	Exit Gas Velocity (ft/s):	65.617
	Exit Gas Temp (F):	1832
	Exit Gas Flow Rate (acfm):	717.86
Company Release Point ID:	Release Point Type:	Vertical
F2	Release Point Latitude:	43.577997 N
	Release Point Longitude:	105.510685 W
Company Release Point Description:	Base Elevation (ft):	4933
	Stack Height (ft):	20
	Stack Diameter (ft):	0.55
Low Pressure Flare	Exit Gas Velocity (ft/s):	65.617
	Exit Gas Temp (F):	1832
	Exit Gas Flow Rate (acfm):	942.0914
Company Release Point ID:	Release Point Type:	Vertical
H1	Release Point Latitude:	43.578300 N
	Release Point Longitude:	105.511659 W
Company Release Point Description:	Base Elevation (ft):	4930
	Stack Height (ft):	10
	Stack Diameter (ft):	0.416666667
Line Heater	Exit Gas Velocity (ft/s):	109.3
	Exit Gas Temp (F):	400
	Exit Gas Flow Rate (acfm):	893.8
Company Release Point ID:	Release Point Type:	
	Release Point Latitude:	
	Release Point Longitude:	
Company Release Point Description:	Base Elevation (ft):	
	Stack Height (ft):	
	Stack Diameter (ft):	
	Exit Gas Velocity (ft/s):	
	Exit Gas Temp (F):	
	Exit Gas Flow Rate (acfm):	

Revised 11/3/2014

Complete the table below for each fugitive (area, volume, line) release point. List each individual release point on a separate line.

Fugitive Release Point Information	
Company Release Point ID:	Release Point Latitude:
	Release Point Longitude:
	Release Height (ft):
Company Release Point Description:	
Company Release Point ID:	Release Point Latitude:
	Release Point Longitude:
	Release Height (ft):
Company Release Point Description:	
Company Release Point ID:	Release Point Latitude:
	Release Point Longitude:
	Release Height (ft):
Company Release Point Description:	
Company Release Point ID:	Release Point Latitude:
	Release Point Longitude:
	Release Height (ft):
Company Release Point Description:	

Attachment C
Gas Analyses

AMERICAN MOBILE RESEARCH, INC.

1955 CBS COURT
CASPER, WYOMING 82604

(307) 235-4590 OFFICE PHONE
(307) 265-4489 OFFICE FAX

EXTENDED HYDROCARBON GAS (GLYCALC) STUDY
CERTIFICATE OF ANALYSIS

Company ..... TISDALE CREEK RANCH, INC.
Lab Number CR-14758
Date Sampled 10-7-2014

Study Number CR-7
Date Sampled 10-8-2014

Sample Identification ..... ROWDY PIPELINE - UPRISING LPG STATION GAS

Sample Location ..... CLARKLEN FIELD, GILLETTE, WYOMING.
Sample Pressure ..... 70 PSIG
Type Sample ..... SPOT
Test Method GPA-2286

Sample Temperature ..... 68 F
County ..... CAMPBELL
Moisture Content..... N/A

Components	Mole %	Weight %	Liq. Vol. %
Carbon Dioxide	1.241	2.006	0.996
Hydrogen Sulfide	0.000	0.000	0.000
Nitrogen	0.747	0.769	0.387
Methane	65.930	38.855	52.577
Ethane	12.345	13.636	15.530
Propane	8.640	13.996	11.197
iso-Butane	1.280	2.733	1.970
n-Butane	3.326	7.102	4.932
iso-Pentane	1.058	2.804	1.820
n-Pentane	1.133	3.003	1.932
Cyclopentane	0.081	0.209	0.113
n-Hexane	0.459	1.453	0.888
Cyclohexane	0.307	0.949	0.491
Other Hexanes	0.729	2.308	1.410
Heptanes	1.675	6.166	3.635
Methylcyclohexane	0.392	1.414	0.741
2,2,4-Trimethylpentane...	0.103	0.432	0.252
Benzene	0.037	0.106	0.049
Toluene	0.068	0.230	0.107
Ethylbenzene	0.052	0.203	0.094
Xylenes	0.134	0.523	0.244
C8+ Heavies	0.263	1.104	0.634
Totals	**100.000**	**100.000**	**100.000**

ADDITIONAL BETX DATA

Components	Mole %	Weight %	Liq. Vol. %
Cyclopentane	0.081	0.209	0.113
Cyclohexane	0.307	0.949	0.491
2-Methylpentane	0.523	1.656	1.012
3-Methylpentane	0.206	0.652	0.398
n-Hexane	0.459	1.453	0.888
Methylcyclohexane	0.392	1.414	0.741
2,2,4-Trimethylpentane	0.103	0.432	0.252
Benzene	0.037	0.106	0.049
Toluene	0.068	0.230	0.107
Ethylbenzene	0.052	0.203	0.094
m-Xylene	0.020	0.078	0.037
p-Xylene	0.080	0.314	0.146
o-Xylene	0.034	0.131	0.061

SPECIFIC GRAVITY AT 60/60 F, calculated	0.9399
TOTAL GPM (ETHANE INCLUSIVE)	9.760
CALCULATED BTU / REAL CF AT 14.73 PSIA, dry basis	1582.033
CALCULATED BTU / REAL CF AT 14.73 PSIA, wet basis	1554.762
AVERAGE MOLECULAR WEIGHT	27.221
MOLAR MASS RATIO	0.9399
RELATIVE DENSITY (G x Z (Air) / Z), calculated	0.000
IDEAL GROSS HEATING VALUE, BTU / IDEAL CF AT 14.696 PSIA, calculated	1567.908
COMPRESSIBILITY FACTOR (Z)	0.99335

PROPANE GPM	2.3742
BUTANE GPM	1.4637
GASOLINE GPM (PENTANE AND HEAVIER)	2.6292

NOTATION: ALL CALCULATIONS PERFORMED USING PHYSICAL CONSTANTS FROM GPA 2145-09, THE TABLES OF PHYSICAL CONSTANTS FOR HYDROCARBONS AND OTHER COMPOUNDS OF INTEREST TO THE NATURAL GAS INDUSTRY.

James A. Kane, President
American Mobile Research, Inc.

Attachment D
ProMax Output

Inlet Compression
Plant Schematic

Client Name:	Rowdy Pipeline	Job: Uprising Model
Location:	Uprising Compressor Station	
Flowsheet:	Inlet Compression	

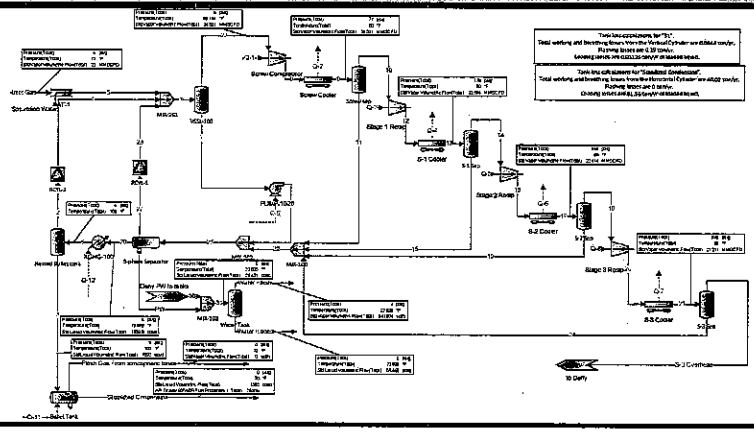

* User Specified Values
? Extrapolated or Approximate Values

Copyright © 2002-2012 BRE Group, Ltd.

Licensed to Compliance Partners Incorporated and Affiliates

Process Streams Report
All Streams
Tabulated by Total Phase

Client Name:	Rowdy Pipeline	Job: Uprising Model
Location:	Uprising Compressor Station	
Flowsheet:	Inlet Compression	

Connections

	Flash Gas From atmospheric tanks	Inlet Gas	PW	S-3 Overhead	Saturation Water
From Block	Bullet Tank	--	3-phase Separator	S-3 Sep	--
To Block	--	SAT-1	MIX-103	to Dehy	SAT-1

Stream Composition

Mole Fraction	Flash Gas From atmospheric tanks %	Inlet Gas %	PW %	S-3 Overhead %	Saturation Water %
Carbon Dioxide		1.241 *	0.00139696	1.32944	0 *
Hydrogen Sulfide		0 *	0	0	0 *
Nitrogen		0.747 *	3.2164E-06	0.800321	0 *
Methane		65.93 *	0.00139332	70.6355	0 *
Ethane		12.345 *	0.00132627	13.2157	0 *
Propane		8.64 *	0.00324676	9.08882	0 *
Isobutane		1.28 *	0.000170386	1.19616	0 *
n-Butane		3.326 *	0.000777545	2.72779	0 *
Isopentane		1.058 *	0.000130318	0.459795	0 *
n-Pentane		1.133 *	8.436E-05	0.36527	0 *
Cyclopentane		0.081 *	4.60644E-05	0.0157227	0 *
n-Hexane		0.459 *	3.08853E-06	0.0190826	0 *
2-Methylpentane		0.523 *	6.32174E-06	0.0407247	0 *
3-Methylpentane		0.206 *	7.06754E-06	0.0131338	0 *
Cyclohexane		0.307 *	3.50618E-05	0.0085999	0 *
Heptane		1.675 *	1.24932E-05	0.00633446	0 *
Methylcyclohexane		0.392 *	7.64444E-06	0.00134832	0 *
2,2,4-Trimethylpentane		0.103 *	2.09326E-08	0.000469765	0 *
Benzene		0.037 *	0.00022592	0.00181648	0 *
Toluene		0.068 *	7.08995E-05	0.000160984	0 *
Ethylbenzene		0.052 *	1.81343E-05	4.56428E-06	0 *
m-Xylene		0.02 *	5.15399E-06	9.99412E-07	0 *
p-Xylene		0.08 *	1.96252E-05	4.50482E-06	0 *
o-Xylene		0.034 *	9.83534E-06	1.16838E-06	0 *
Octane		0.263 *	1.20477E-07	3.80579E-05	0 *
Water		0 *	99.991	0.0738295	100 *
TEG		0 *	0	0	0 *

Molar Flow	Flash Gas From atmospheric tanks lbmol/h	Inlet Gas lbmol/h	PW lbmol/h	S-3 Overhead lbmol/h	Saturation Water lbmol/h
Carbon Dioxide	0	29.9771 *	0.000651377	29.9738	0 *
Hydrogen Sulfide	0	0 *	0	0	0 *
Nitrogen	0	18.0442 *	1.49975E-06	18.0442	0 *
Methane	0	1592.58 *	0.000649677	1592.56	0 *
Ethane	0	298.201 *	0.000618417	297.962	0 *
Propane	0	208.704 *	0.0015139	204.918	0 *
Isobutane	0	30.9191 *	7.94481E-05	26.9687	0 *
n-Butane	0	80.3414 *	0.000362555	61.5012	0 *
Isopentane	0	25.5566 *	6.07647E-05	10.3666	0 *
n-Pentane	0	27.3683 *	3.93355E-05	8.23542	0 *
Cyclopentane	0	1.9566 *	2.1479E-05	0.354485	0 *
n-Hexane	0	11.0874 *	1.44012E-06	0.43024	0 *
2-Methylpentane	0	12.6334 *	2.94771E-06	0.918186	0 *
3-Methylpentane	0	4.97605 *	3.29546E-06	0.296117	0 *
Cyclohexane	0	7.41576 *	1.63487E-05	0.193895	0 *

* User Specified Values
? Extrapolated or Approximate Values

Copyright © 2002-2012 BRE Group, Ltd.
Licensed to Compliance Partners Incorporated and Affiliates

Process Streams Report
All Streams
Tabulated by Total Phase

Client Name:	Rowdy Pipeline	Job: Uprising Model
Location:	Uprising Compressor Station	
Flowsheet:	Inlet Compression	

Molar Flow	Flash Gas From atmospheric tanks lbmol/h	Inlet Gas lbmol/h	PW lbmol/h	S-3 Overhead lbmol/h	Saturation Water lbmol/h
Heptane	0	40.4606 *	5.82535E-06	0.142818	0 *
Methylcyclohexane	0	9.46899 *	3.56446E-06	0.0303995	0 *
2,2,4-Trimethylpentane	0	2.48802 *	9.76048E-09	0.0105914	0 *
Benzene	0	0.893756 *	0.000105342	0.0409546	0 *
Toluene	0	1.64258 *	3.30591E-05	0.00362958	0 *
Ethylbenzene	0	1.25609 *	8.45567E-06	0.000102907	0 *
m-Xylene	0	0.483112 *	2.40321E-06	2.25329E-05	0 *
p-Xylene	0	1.93245 *	9.15089E-06	0.000101566	0 *
o-Xylene	0	0.82129 *	4.58604E-06	2.63424E-05	0 *
Octane	0	6.35292 *	5.61762E-08	0.000858059	0 *
Water	0	0 *	46.624	1.66457	48.289 *
TEG	0	0 *	0	0	0 *

Mass Fraction	Flash Gas From atmospheric tanks %	Inlet Gas %	PW %	S-3 Overhead %	Saturation Water %
Carbon Dioxide		2.00636 *	0.00341223	2.53251	0 *
Hydrogen Sulfide		0 *	0	0	0 *
Nitrogen		0.768737 *	5.00083E-06	0.970435	0 *
Methane		38.8549 *	0.00124059	49.049	0 *
Ethane		13.6365 *	0.0022134	17.2007	0 *
Propane		13.9959 *	0.00794607	17.3476	0 *
Isobutane		2.73302 *	0.000549648	3.0093	0 *
n-Butane		7.10159 *	0.00250827	6.86261	0 *
Isopentane		2.80418 *	0.000521842	1.43592	0 *
n-Pentane		3.00296 *	0.00033781	1.14072	0 *
Cyclopentane		0.208688 *	0.000179306	0.0477292	0 *
n-Hexane		1.45307 *	1.47721E-05	0.0711799	0 *
2-Methylpentane		1.65568 *	3.02362E-05	0.151907	0 *
3-Methylpentane		0.652141 *	3.38033E-05	0.0489904	0 *
Cyclohexane		0.949145 *	0.000163774	0.031328	0 *
Heptane		6.1657 *	6.94795E-05	0.027474	0 *
Methylcyclohexane		1.41393 *	4.16584E-05	0.00573033	0 *
2,2,4-Trimethylpentane		0.432218 *	1.3271E-07	0.00232269	0 *
Benzene		0.106172 *	0.00097944	0.00614163	0 *
Toluene		0.230166 *	0.000362569	0.000642038	0 *
Ethylbenzene		0.202804 *	0.000106853	2.09744E-05	0 *
m-Xylene		0.0780014 *	3.03691E-05	4.59264E-06	0 *
p-Xylene		0.312006 *	0.000115639	2.07012E-05	0 *
o-Xylene		0.132602 *	5.79532E-05	5.36908E-06	0 *
Octane		1.10362 *	7.63811E-07	0.000188172	0 *
Water		0 *	99.9791	0.0575714	100 *
TEG		0 *	0	0	0 *

Mass Flow	Flash Gas From atmospheric tanks lb/h	Inlet Gas lb/h	PW lb/h	S-3 Overhead lb/h	Saturation Water lb/h
Carbon Dioxide	0	1319.28 *	0.0286668	1319.13	0 *
Hydrogen Sulfide	0	0 *	0	0	0 *
Nitrogen	0	505.48 *	4.2013E-05	505.478	0 *
Methane	0	25548.9 *	0.0104224	25548.5	0 *
Ethane	0	8966.61 *	0.0185952	8959.44	0 *
Propane	0	9202.94 *	0.0667565	9035.99	0 *
Isobutane	0	1797.09 *	0.0046177	1567.48	0 *

* User Specified Values
? Extrapolated or Approximate Values

Copyright © 2002-2012 BRE Group, Ltd.
Licensed to Compliance Partners Incorporated and Affiliates

Process Streams Report
All Streams
Tabulated by Total Phase

Client Name:	Rowdy Pipeline	Job: Uprising Model
Location:	Uprising Compressor Station	
Flowsheet:	Inlet Compression	

Mass Flow	Flash Gas From atmospheric tanks lb/h	Inlet Gas lb/h	PW lb/h	S-3 Overhead lb/h	Saturation Water lb/h
n-Butane	0	4669.62 *	0.0210725	3574.58	0 *
Isopentane	0	1843.88 *	0.0043841	747.939	0 *
n-Pentane	0	1974.59 *	0.00283801	594.176	0 *
Cyclopentane	0	137.222 *	0.00150638	24.8611	0 *
n-Hexane	0	955.461 *	0.000124103	37.0761	0 *
2-Methylpentane	0	1088.68 *	0.00025402	79.125	0 *
3-Methylpentane	0	428.813 *	0.000283988	25.518	0 *
Cyclohexane	0	624.107 *	0.0013759	16.3181	0 *
Heptane	0	4054.23 *	0.000583711	14.3106	0 *
Methylcyclohexane	0	929.722 *	0.00034998	2.9848	0 *
2,2,4-Trimethylpentane	0	284.203 *	1.11493E-06	1.20984	0 *
Benzene	0	69.8129 *	0.00822847	3.19904	0 *
Toluene	0	151.345 *	0.00304602	0.334424	0 *
Ethylbenzene	0	133.353 *	0.000897696	0.0109251	0 *
m-Xylene	0	51.2895 *	0.000255137	0.0023922	0 *
p-Xylene	0	205.158 *	0.000971504	0.0107828	0 *
o-Xylene	0	87.1922 *	0.000486877	0.00279664	0 *
Octane	0	725.684 *	6.41693E-06	0.0980148	0 *
Water	0	0 *	839.944	29.9877	869.94 *
TEG	0	0 *	0	0	0 *

Stream Properties

Property	Units	Flash Gas From atmospheric tanks	Inlet Gas	PW	S-3 Overhead	Saturation Water
Temperature	°F	70 *	70 *	19.6788	79.8881	222.979
Pressure	psia	12.187 *	18.187 *	18.187	858.187	18.187
Mole Fraction Vapor	%		99.7689	0	100	95.2537
Mole Fraction Light Liquid	%		0.231077	100	0	4.74635
Mole Fraction Heavy Liquid	%		0	0	0	0
Molecular Weight	lb/lbmol		27.2213	18.0174	23.1028	18.0153
Mass Density	lb/ft^3		0.0879682	62.9348	4.55286	0.0474364
Molar Flow	lbmol/h	0	2415.56	46.6282	2254.62	48.289
Mass Flow	lb/h	0	65754.6	840.12	52087.8	869.94
Vapor Volumetric Flow	ft^3/h		747482	13.349	11440.7	18339.1
Liquid Volumetric Flow	gpm		93192.6	1.6643	1426.37	2286.43
Std Vapor Volumetric Flow	MMSCFD	0	22 *	0.424672	20.5342	0.439798
Std Liquid Volumetric Flow	sgpm	0	323.976	1.67977	283.42	1.73907
Compressibility			0.990091	0.00101216	0.752072	0.942822
Specific Gravity				1.00907	0.797675	
API Gravity				10.021		
Enthalpy	Btu/h	0	-9.33677E+07	-5.77749E+06	-8.46537E+07	-5.00481E+06
Mass Enthalpy	Btu/lb		-1419.94	-6876.99	-1625.21	-5753.06
Mass Cp	Btu/(lb*°F)		0.443931	0.990339	0.658865	0.485808
Ideal Gas CpCv Ratio			1.19849	1.32823	1.22874	1.3189
Dynamic Viscosity	cP			2.07716	0.0128665	
Kinematic Viscosity	cSt			2.06043	0.176423	
Thermal Conductivity	Btu/(h*ft*°F)			0.320514 ?	0.0208502	
Surface Tension	lbf/ft			0.00543675 ?		
Net Ideal Gas Heating Value	Btu/ft^3		1426.22	0.164362	1219.9	0
Net Liquid Heating Value	Btu/lb		19788.9	-1056.11	19961.3	-1059.76
Gross Ideal Gas Heating Value	Btu/ft^3		1562.47	50.4838	1341.91	50.31
Gross Liquid Heating Value	Btu/lb		21688.4	3.72632	21965.4	0

Warnings
ProMax:ProMax!Project!Flowsheets!Inlet Compression!PStreams!PW

* User Specified Values
? Extrapolated or Approximate Values

Copyright © 2002-2012 BRE Group, Ltd.
Licensed to Compliance Partners Incorporated and Affiliates

Process Streams Report
All Streams
Tabulated by Total Phase

Client Name:	Rowdy Pipeline	Job: Uprising Model	
Location:	Uprising Compressor Station		
Flowsheet:	Inlet Compression		

Connections

	Stabilized Condensate	Water Flash	Water loaded	5
From Block	Bullet Tank	Water Tank	Water Tank	SAT-1
To Block	--	--	--	MIX-101

Stream Composition

Mole Fraction	Stabilized Condensate %	Water Flash %	Water loaded %	5 %
Carbon Dioxide	0.00134815	1.64271	0.00137012	1.21668
Hydrogen Sulfide	0	0	0	0
Nitrogen	1.7086E-06	0.0817522	1.25916E-06	0.73236
Methane	0.00433144	25.1682	0.000781715	64.6378
Ethane	0.13815	19.6832	0.000842124	12.1031
Propane	2.31565	33.0489	0.00240117	8.47066
Isobutane	2.42677	3.68359	8.17333E-05	1.25491
n-Butane	11.5807	11.5973	0.000494601	3.26081
Isopentane	9.34362	2.10665	7.95037E-05	1.03726
n-Pentane	11.7693	1.56073	4.77452E-05	1.11079
Cyclopentane	0.985107	0.13901	4.432E-05	0.0794125
n-Hexane	6.5573	0.0891205	1.03402E-06	0.450004
2-Methylpentane	7.20818	0.171296	2.36729E-06	0.51275
3-Methylpentane	2.87951	0.104616	4.61934E-06	0.201963
Cyclohexane	4.4436	0.134374	3.2913E-05	0.300983
Heptane	24.808	0.181329	7.99989E-06	1.64217
Methylcyclohexane	5.80767	0.0522317	6.36208E-06	0.384317
2,2,4-Trimethylpentane	1.52439	0.000876435	9.98975E-10	0.100981
Benzene	0.524658	0.0360295	0.000337887	0.0362748
Toluene	1.00845	0.0103821	8.07449E-05	0.0666673
Ethylbenzene	0.772831	0.00177781	1.77894E-05	0.0509809
m-Xylene	0.297254	0.000539991	5.04795E-06	0.019608
p-Xylene	1.18901	0.00227009	1.92284E-05	0.0784321
o-Xylene	0.505339	0.000808365	9.63884E-06	0.0333336
Octane	3.90855	0.00339495	3.97185E-08	0.257845
Water	0.000363487	0.498861	99.9933	1.9599
TEG	0	4.33843E-17	1.4477E-08	0

Molar Flow	Stabilized Condensate lbmol/h	Water Flash lbmol/h	Water loaded lbmol/h	5 lbmol/h
Carbon Dioxide	0.00219094	1.80052E-05	0.000659687	29.9771
Hydrogen Sulfide	0	0	0	0
Nitrogen	2.77674E-06	8.96059E-07	6.06262E-07	18.0442
Methane	0.00703925	0.000275861	0.000376381	1592.58
Ethane	0.224514	0.000215741	0.000405467	298.201
Propane	3.76328	0.000362238	0.00115612	208.704
Isobutane	3.94387	4.03747E-05	3.9353E-05	30.9191
n-Butane	18.8204	0.000127115	0.000238141	80.3414
Isopentane	15.1848	2.30903E-05	3.82795E-05	25.5566
n-Pentane	19.1269	1.71067E-05	2.29884E-05	27.3683
Cyclopentane	1.60095	1.52365E-06	2.13392E-05	1.9566
n-Hexane	10.6566	9.76821E-07	4.97861E-07	11.0874
2-Methylpentane	11.7144	1.87752E-06	1.13981E-06	12.6334
3-Methylpentane	4.67964	1.14666E-06	2.22413E-06	4.97605
Cyclohexane	7.22152	1.47284E-06	1.5847E-05	7.41576
Heptane	40.3167	1.98749E-06	3.8518E-06	40.4606
Methylcyclohexane	9.43834	5.72495E-07	3.06322E-06	9.46899
2,2,4-Trimethylpentane	2.47737	9.60632E-09	4.80988E-10	2.48802
Benzene	0.852649	3.94908E-07	0.000162686	0.893756
Toluene	1.63888	1.13795E-07	3.88771E-05	1.64258
Ethylbenzene	1.25597	1.9486E-08	8.56528E-06	1.25609

Copyright © 2002-2012 BRE Group, Ltd.
Licensed to Compliance Partners Incorporated and Affiliates

Process Streams Report
All Streams
Tabulated by Total Phase

Client Name:	Rowdy Pipeline	Job: Uprising Model	
Location:	Uprising Compressor Station		
Flowsheet:	Inlet Compression		

Molar Flow	Stabilized Condensate lbmol/h	Water Flash lbmol/h	Water loaded lbmol/h	5 lbmol/h
m-Xylene	0.483083	5.91868E-09	2.43049E-06	0.483112
p-Xylene	1.93232	2.48817E-08	9.25809E-06	1.93245
o-Xylene	0.821253	8.86023E-09	4.64092E-06	0.82129
Octane	6.35199	3.72109E-08	1.91237E-08	6.35292
Water	0.000590722	5.46786E-06	48.1449	48.289
TEG	0	4.75522E-22	6.97041E-09	0

Mass Fraction	Stabilized Condensate %	Water Flash %	Water loaded %	5 %
Carbon Dioxide	0.000704205	1.91769	0.00334674	1.98016
Hydrogen Sulfide	0	0	0	0
Nitrogen	5.68098E-07	0.0607484	1.95778E-06	0.758699
Methane	0.000824744	10.7101	0.000696044	38.3475
Ethane	0.0493043	15.6995	0.00140544	13.4584
Propane	1.21195	38.6565	0.00587672	13.8131
Isobutane	1.67412	5.67915	0.000263668	2.69734
n-Butane	7.98898	17.8801	0.00159556	7.00886
Isopentane	8.00128	4.03172	0.000318371	2.76756
n-Pentane	10.0785	2.98695	0.000191195	2.96375
Cyclopentane	0.820013	0.258606	0.00017252	0.205963
n-Hexane	6.70693	0.203719	4.94572E-06	1.4341
2-Methylpentane	7.37266	0.391562	1.13227E-05	1.63406
3-Methylpentane	2.94521	0.239139	2.20943E-05	0.643626
Cyclohexane	4.43867	0.299978	0.00015374	0.936752
Heptane	29.5042	0.481962	4.44915E-05	6.08519
Methylcyclohexane	6.76811	0.136036	3.4671E-05	1.39547
2,2,4-Trimethylpentane	2.06674	0.00265561	6.33354E-09	0.426575
Benzene	0.486417	0.0746527	0.00146489	0.104786
Toluene	1.10283	0.0253745	0.000412927	0.22716
Ethylbenzene	0.973826	0.00500653	0.000104824	0.200156
m-Xylene	0.374563	0.00152068	2.9745E-05	0.0769829
p-Xylene	1.49824	0.00639284	0.000113303	0.307932
o-Xylene	0.636766	0.00227645	5.67967E-05	0.130871
Octane	5.29915	0.0102867	2.51817E-07	1.08921
Water	7.77223E-05	0.238391	99.9837	1.30573
TEG	0	1.7282E-16	1.20667E-07	0

Mass Flow	Stabilized Condensate lb/h	Water Flash lb/h	Water loaded lb/h	5 lb/h
Carbon Dioxide	0.0964222	0.000792401	0.0290325	1319.28
Hydrogen Sulfide	0	0	0	0
Nitrogen	7.7786E-05	2.51017E-05	1.69835E-05	505.48
Methane	0.112927	0.00442548	0.00603808	25548.9
Ethane	6.75092	0.00648714	0.012192	8966.61
Propane	165.944	0.0159731	0.0509797	9202.94
Isobutane	229.226	0.00234667	0.00228728	1797.09
n-Butane	1093.88	0.00738819	0.0138413	4669.62
Isopentane	1095.56	0.00166594	0.00276182	1843.88
n-Pentane	1379.98	0.00123423	0.00165858	1974.59
Cyclopentane	112.279	0.000106858	0.00149658	137.222
n-Hexane	918.336	8.41779E-05	4.29034E-05	955.461
2-Methylpentane	1009.49	0.000161796	9.82231E-05	1088.68
3-Methylpentane	403.269	9.88139E-05	0.000191665	428.813
Cyclohexane	607.759	0.000123953	0.00133367	624.107
Heptane	4039.81	0.00019915	0.000385957	4054.23
Methylcyclohexane	926.714	5.6211E-05	0.000300766	929.722
2,2,4-Trimethylpentane	282.986	1.09732E-06	5.49425E-08	284.203
Benzene	66.602	3.0847E-05	0.0127077	69.8129

Copyright © 2002-2012 BRE Group, Ltd.
Licensed to Compliance Partners Incorporated and Affiliates

Process Streams Report
All Streams
Tabulated by Total Phase

Client Name:	Rowdy Pipeline	Job: Uprising Model
Location:	Uprising Compressor Station	
Flowsheet:	Inlet Compression	

Mass Flow	Stabilized Condensate lb/h	Water Flash lb/h	Water loaded lb/h	5 lb/h
Toluene	151.004	1.04849E-05	0.00358208	151.345
Ethylbenzene	133.34	2.06874E-06	0.000909333	133.353
m-Xylene	51.2865	6.28356E-07	0.000258033	51.2895
p-Xylene	205.145	2.64157E-06	0.000982885	205.158
o-Xylene	87.1883	9.40646E-07	0.000492703	87.1922
Octane	725.579	4.25055E-06	2.18447E-06	725.684
Water	0.010642	9.8505E-05	867.344	869.94
TEG	0	7.14105E-20	1.04677E-06	0

Stream Properties

Property	Units	Stabilized Condensate	Water Flash	Water loaded	5
Temperature	°F	70	22.8354	22.8354	70
Pressure	psia	12.187	12.187 *	12.187	18.187
Mole Fraction Vapor	%	0	100	0	99.8237
Mole Fraction Light Liquid	%	100	0	100	0.176261
Mole Fraction Heavy Liquid	%	0	0	0	0
Molecular Weight	lb/lbmol	84.2528	37.699	18.017	27.0409
Mass Density	lb/ft^3	42.0174	0.0899108	62.8364	0.0873323
Molar Flow	lbmol/h	162.515	0.00109607	48.1481	2463.85
Mass Flow	lb/h	13692.4	0.0413207	867.485	66624.5
Vapor Volumetric Flow	ft^3/h	325.874	0.459575	13.8054	762885
Liquid Volumetric Flow	gpm	40.6284	0.0572976	1.7212	95113
Std Vapor Volumetric Flow	MMSCFD	1.48013	9.98258E-06	0.438515	22.4398
Std Liquid Volumetric Flow	sgpm	40.5991	0.000176402	1.73439	325.715
Compressibility		0.00429915	0.986845	0.000674842	0.990689
Specific Gravity		0.67369	1.30164	1.00749	
API Gravity		76.9225		10.018	
Enthalpy	Btu/h	-1.28138E+07	-49.9008	-5.9632E+06	-9.83725E+07
Mass Enthalpy	Btu/lb	-935.838	-1207.65	-6874.13	-1476.52
Mass Cp	Btu/(lb*°F)	0.49865	0.385741	0.989683	0.443812
Ideal Gas CpCv Ratio		1.0669	1.15945	1.32809	1.20002
Dynamic Viscosity	cP	0.326606	0.00807718	1.97124	
Kinematic Viscosity	cSt	0.48526	5.60825	1.95843	
Thermal Conductivity	Btu/(h*ft*°F)	0.0679575	0.0102579	0.322386 ?	
Surface Tension	lbf/ft	0.00127336 ?		0.0054116 ?	
Net Ideal Gas Heating Value	Btu/ft^3	4273.24	1948.71	0.12054	1398.26
Net Liquid Heating Value	Btu/lb	19087.6	19473.7	-1057.07	19516.7
Gross Ideal Gas Heating Value	Btu/ft^3	4606.25	2122.96	50.437	1532.84
Gross Liquid Heating Value	Btu/lb	20587.5	21227.7	2.72283	21405.2

Warnings

ProMax:ProMax!Project!Flowsheets!Inlet Compression!PStreams!Water Flash
- Warning: The temperature of 22.8354 °F is below ice formation.
- Warning: The temperature of 22.8354 °F is within 10 °F of hydrate formation.

ProMax:ProMax!Project!Flowsheets!Inlet Compression!PStreams!Water loaded
- Warning: The temperature of 22.8354 °F is below ice formation.
- Warning: The temperature of 22.8354 °F is within 10 °F of hydrate formation.

Remarks

* User Specified Values
? Extrapolated or Approximate Values

Copyright © 2002-2012 BRE Group, Ltd.
Licensed to Compliance Partners Incorporated and Affiliates

TEG Dehydrator
Plant Schematic

Client Name:	Rowdy Pipeline	Job: Uprising Model
Location:	Uprising Compressor Station	
Flowsheet:	TEG Dehydrator	

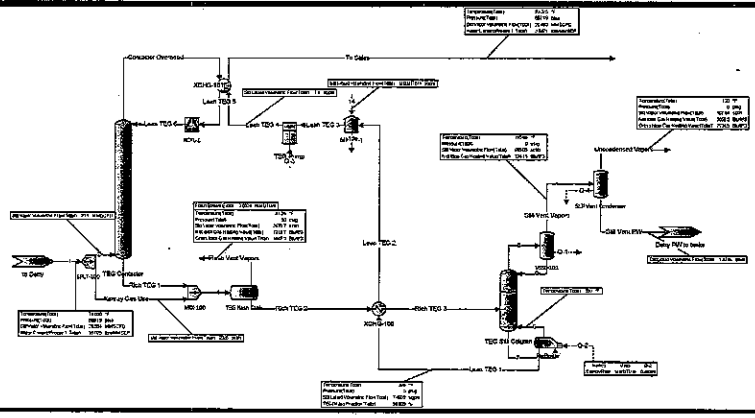

* User Specified Values
? Extrapolated or Approximate Values

ProMax 3.2.12198.0
Copyright © 2002-2012 BRE Group, Ltd.

Licensed to Compliance Partners Incorporated and Affiliates

Process Streams Report
All Streams
Tabulated by Total Phase

Client Name:	Rowdy Pipeline	Job: Uprising Model
Location:	Uprising Compressor Station	
Flowsheet:	TEG Dehydrator	

Connections

	Contactor Overhead	Flash Vent Vapors	Kimray Gas Use	Lean TEG 1	Rich TEG 1
From Block	TEG Contactor	TEG flash Tank	SPLT-100	ReBoiler	TEG Contactor
To Block	XCHG-101	--	MIX-100	XCHG-100	MIX-100

Stream Composition

Mole Fraction	Contactor Overhead %	Flash Vent Vapors %	Kimray Gas Use %	Lean TEG 1 %	Rich TEG 1 %
Carbon Dioxide	1.32513	2.77749	1.32944	2.22954E-07	0.420471
Hydrogen Sulfide	0	0	0	0	0
Nitrogen	0.801493	0.631082	0.800321	8.11521E-13	0.0055641
Methane	70.7169	62.3662	70.6355	6.07775E-09	1.94044
Ethane	13.2202	14.7303	13.2157	7.64877E-08	1.06908
Propane	9.0843	12.0402	9.08882	5.06152E-07	1.23608
Isobutane	1.1956	1.54519	1.19616	1.45203E-07	0.159883
n-Butane	2.72399	4.09297	2.72779	1.25223E-06	0.531436
Isopentane	0.458529	0.775351	0.459795	1.58192E-06	0.130681
n-Pentane	0.363841	0.683892	0.36527	2.52778E-06	0.131599
Cyclopentane	0.0152948	0.0573051	0.0157227	2.36144E-05	0.0297706
n-Hexane	0.0189511	0.0387555	0.0190826	8.51307E-07	0.0106164
2-Methylpentane	0.0405043	0.0791597	0.0407247	9.46666E-07	0.0186927
3-Methylpentane	0.0130389	0.0278701	0.0131338	6.50359E-07	0.00759543
Cyclohexane	0.00837199	0.0262229	0.0085999	2.5494E-05	0.0158938
Heptane	0.00625446	0.0128539	0.00633446	1.80463E-06	0.00591425
Methylcyclohexane	0.00130775	0.00358022	0.00134832	7.1668E-06	0.00281333
2,2,4-Trimethylpentane	0.000464393	0.000923758	0.000469765	1.08304E-07	0.000401714
Benzene	0.00139098	0.00761413	0.00181648	0.000809852	0.0289386
Toluene	0.00010993	0.000488625	0.000160984	0.000264752	0.00362701
Ethylbenzene	3.07679E-06	9.98413E-06	4.56428E-06	1.52125E-05	0.000113043
m-Xylene	6.54847E-07	2.07113E-06	9.99412E-07	4.04139E-06	2.67106E-05
p-Xylene	3.03024E-06	9.44036E-06	4.50482E-06	1.57864E-05	0.000112793
o-Xylene	7.0416E-07	2.31365E-06	1.16838E-06	9.64738E-06	4.04786E-05
Octane	3.73707E-05	6.74253E-05	3.80579E-05	5.85932E-08	4.91562E-05
Water	0.00431185	0.102465	0.0738295	9.12874	12.763
TEG	1.94138E-05	5.05614E-05	0	90.8701	81.4872

Molar Flow	Contactor Overhead lbmol/h	Flash Vent Vapors lbmol/h	Kimray Gas Use lbmol/h	Lean TEG 1 lbmol/h	Rich TEG 1 lbmol/h
Carbon Dioxide	29.7592	0.196057	0.0709414	6.83085E-08	0.143657
Hydrogen Sulfide	0	0	0	0	0
Nitrogen	17.9995	0.0445468	0.0427066	2.48633E-13	0.00190102
Methane	1588.13	4.4023	3.76924	1.8621E-09	0.662966
Ethane	296.892	1.03978	0.705212	2.34342E-08	0.365259
Propane	204.011	0.849894	0.484997	1.55074E-07	0.422317
Isobutane	26.8502	0.109072	0.0638291	4.44873E-08	0.0546254
n-Butane	61.1741	0.288914	0.14556	3.83656E-07	0.181569
Isopentane	10.2974	0.0547305	0.0245355	4.84668E-07	0.0446481
n-Pentane	8.17097	0.0482746	0.0194915	7.74459E-07	0.0449616
Cyclopentane	0.343483	0.00404505	0.00083899	7.23497E-06	0.0101713
n-Hexane	0.425595	0.00273567	0.00101828	2.60823E-07	0.00362716
2-Methylpentane	0.909627	0.00558772	0.00217315	2.90039E-07	0.00638649
3-Methylpentane	0.292822	0.00196729	0.000700846	1.99257E-07	0.00259503
Cyclohexane	0.188014	0.00185102	0.000458907	7.81085E-06	0.00543024
Heptane	0.14046	0.000907332	0.000338019	5.529E-07	0.00202065
Methylcyclohexane	0.0293687	0.00025272	7.1949E-05	2.19576E-06	0.000961196
2,2,4-Trimethylpentane	0.0104291	6.52063E-05	2.50675E-05	3.31822E-08	0.000137249
Benzene	0.031238	0.000537466	9.69308E-05	0.000248122	0.00988709
Toluene	0.00246876	3.4491E-05	8.59043E-06	8.11146E-05	0.0012392

Copyright © 2002-2012 BRE Group, Ltd.
Licensed to Compliance Partners Incorporated and Affiliates

Process Streams Report
All Streams
Tabulated by Total Phase

Client Name:	Rowdy Pipeline	Job: Uprising Model
Location:	Uprising Compressor Station	
Flowsheet:	TEG Dehydrator	

Molar Flow	Contactor Overhead lbmol/h	Flash Vent Vapors lbmol/h	Kimray Gas Use lbmol/h	Lean TEG 1 lbmol/h	Rich TEG 1 lbmol/h
Ethylbenzene	6.90971E-05	7.0476E-07	2.43559E-07	4.6608E-06	3.8622E-05
m-Xylene	1.47062E-05	1.46197E-07	5.33305E-08	1.2382E-06	9.12587E-06
p-Xylene	6.80516E-05	6.66376E-07	2.40386E-07	4.83663E-06	3.85366E-05
o-Xylene	1.58137E-05	1.63316E-07	6.23467E-08	2.95576E-06	1.38298E-05
Octane	0.000839254	4.75942E-06	2.03084E-06	1.79518E-08	1.67946E-05
Water	0.0968335	0.00723282	0.00393968	2.79686	4.36056
TEG	0.000435985	3.56903E-06	0	27.8407	27.8407

Mass Fraction	Contactor Overhead %	Flash Vent Vapors %	Kimray Gas Use %	Lean TEG 1 %	Rich TEG 1 %
Carbon Dioxide	2.52513	4.75573	2.53251	7.10466E-08	0.146019
Hydrogen Sulfide	0	0	0	0	0
Nitrogen	0.972172	0.687812	0.970435	1.64607E-13	0.00122995
Methane	49.1215	38.9259	49.049	7.05985E-10	0.24564
Ethane	17.2121	17.2325	17.2007	1.6653E-08	0.253663
Propane	17.3446	20.656	17.3476	1.61606E-07	0.430101
Isobutane	3.00889	3.49416	3.0093	6.11083E-08	0.0733285
n-Butane	6.85528	9.25546	6.86261	5.26995E-07	0.243736
Isopentane	1.43243	2.17643	1.43592	8.2641E-07	0.0743993
n-Pentane	1.13663	1.91971	1.14072	1.32053E-06	0.0749217
Cyclopentane	0.0464454	0.156363	0.0477292	1.19917E-05	0.0164754
n-Hexane	0.0707123	0.129937	0.0711799	5.31191E-07	0.00721915
2-Methylpentane	0.151134	0.265403	0.151907	5.90692E-07	0.0127111
3-Methylpentane	0.0486522	0.0934415	0.0489904	4.05806E-07	0.00516491
Cyclohexane	0.0305077	0.0858621	0.031328	1.55354E-05	0.010555
Heptane	0.0271359	0.0501106	0.027474	1.30932E-06	0.00467631
Methylcyclohexane	0.00555969	0.0136766	0.00573033	5.09515E-06	0.00217971
2,2,4-Trimethylpentane	0.00229688	0.00410536	0.00232269	8.95781E-08	0.000362092
Benzene	0.00470453	0.0231396	0.00614163	0.000458041	0.017837
Toluene	0.000438566	0.0017516	0.000642038	0.000176629	0.00263704
Ethylbenzene	1.41435E-05	4.12391E-05	2.09744E-05	1.1694E-05	9.47006E-05
m-Xylene	3.01022E-06	8.55476E-06	4.59264E-06	3.10666E-06	2.23765E-05
p-Xylene	1.39295E-05	3.89931E-05	2.07012E-05	1.21352E-05	9.44912E-05
o-Xylene	3.23691E-06	9.55645E-06	5.36908E-06	7.41604E-06	3.39105E-05
Octane	0.000184835	0.000299651	0.000188172	4.84623E-08	4.43078E-05
Water	0.00336343	0.0718184	0.0575714	1.19079	1.81434
TEG	0.000126235	0.000295413	0	98.8085	96.5625

Mass Flow	Contactor Overhead lb/h	Flash Vent Vapors lb/h	Kimray Gas Use lb/h	Lean TEG 1 lb/h	Rich TEG 1 lb/h
Carbon Dioxide	1309.69	8.62839	3.1221	3.00622E-06	6.32227
Hydrogen Sulfide	0	0	0	0	0
Nitrogen	504.229	1.24791	1.19636	6.96506E-12	0.0532539
Methane	25477.4	70.6238	60.4679	2.98726E-08	10.6356
Ethane	8927.25	31.2652	21.2051	7.04645E-07	10.983
Propane	8995.98	37.4766	21.3862	6.8381E-06	18.6223
Isobutane	1560.6	6.3395	3.70989	2.5857E-06	3.17495
n-Butane	3555.57	16.7923	8.46027	2.22989E-05	10.5532
Isopentane	742.947	3.94874	1.77021	3.49682E-05	3.22131
n-Pentane	589.526	3.48295	1.40629	5.58763E-05	3.24393
Cyclopentane	24.0895	0.283691	0.0588408	0.000507409	0.713345
n-Hexane	36.6758	0.235748	0.087751	2.24765E-05	0.312572
2-Methylpentane	78.3874	0.481524	0.187272	2.49942E-05	0.550358
3-Methylpentane	25.234	0.169532	0.0603956	1.7171E-05	0.223628
Cyclohexane	15.8232	0.155781	0.0386214	0.000657357	0.457006
Heptane	14.0743	0.0909164	0.0338701	5.54017E-05	0.202473
Methylcyclohexane	2.8836	0.0248136	0.00706439	0.000215593	0.094376
2,2,4-Trimethylpentane	1.1913	0.00744841	0.00286343	3.79035E-06	0.0156777

* User Specified Values
? Extrapolated or Approximate Values

Copyright © 2002-2012 BRE Group, Ltd.
Licensed to Compliance Partners Incorporated and Affiliates

Process Streams Report
All Streams
Tabulated by Total Phase

Client Name:	Rowdy Pipeline	Job: Uprising Model
Location:	Uprising Compressor Station	
Flowsheet:	TEG Dehydrator	

Mass Flow	Contactor Overhead lb/h	Flash Vent Vapors lb/h	Kimray Gas Use lb/h	Lean TEG 1 lb/h	Rich TEG 1 lb/h
Benzene	2.44006	0.0419825	0.00757144	0.0193813	0.772299
Toluene	0.227468	0.00317795	0.000791509	0.00747377	0.114178
Ethylbenzene	0.0073357	7.48208E-05	2.58574E-05	0.000494814	0.00410031
m-Xylene	0.00156129	1.5521E-05	5.66183E-06	0.000131453	0.000968848
p-Xylene	0.0072247	7.07458E-05	2.55206E-05	0.000513481	0.00409124
o-Xylene	0.00167886	1.73384E-05	6.61904E-06	0.000313798	0.00146824
Octane	0.0958667	0.000543662	0.00023198	2.0506E-06	0.00191842
Water	1.74448	0.130301	0.0709744	50.3862	78.5567
TEG	0.0654732	0.000535972	0	4180.92	4180.92

Stream Properties

Property	Units	Contactor Overhead	Flash Vent Vapors	Kimray Gas Use	Lean TEG 1	Rich TEG 1
Temperature	°F	81.9983	81.0597	79.8881	390	80.858
Pressure	psia	853.187	42.187 *	858.187	17.187	858.187
Mole Fraction Vapor	%	100	100	100	0	0
Mole Fraction Light Liquid	%	0	0	0	100	100
Mole Fraction Heavy Liquid	%	0	0	0	0	0
Molecular Weight	lb/lbmol	23.0952	25.7029	23.1028	138.108	126.728
Mass Density	lb/ft^3	4.47484	0.189696	4.55286	58.4839	68.2944
Molar Flow	lbmol/h	2245.75	7.0588	5.33619	30.6379	34.1657
Mass Flow	lb/h	51866.2	181.432	123.281	4231.34	4329.76
Vapor Volumetric Flow	ft^3/h	11590.6	956.433	27.0776	72.3505	63.3984
Liquid Volumetric Flow	gpm	1445.06	119.244	3.37591	9.02032	7.90421
Std Vapor Volumetric Flow	MMSCFD	20.4535	0.0642889	0.0486 *	0.279039	0.311169
Std Liquid Volumetric Flow	sgpm	282.395	0.926358	0.670795	7.49988	7.85489
Compressibility		0.757515	0.985049	0.752072	0.00445111	0.274528
Specific Gravity		0.797416	0.887451	0.797675	0.937707	1.09501
API Gravity					-6.6116	-3.57281
Enthalpy	Btu/h	-8.41022E+07	-280584	-200357	-9.16719E+06	-1.02521E+07
Mass Enthalpy	Btu/lb	-1621.52	-1546.5	-1625.21	-2166.5	-2367.82
Mass Cp	Btu/(lb*°F)	0.653473	0.450337	0.658865	0.669697	0.541541
Ideal Gas CpCv Ratio		1.22822	1.21017	1.22874	1.02673	1.03952
Dynamic Viscosity	cP	0.0128446	0.0103473	0.0128665	0.837366	20.7449
Kinematic Viscosity	cSt	0.179194	3.40524	0.176423	0.893837	18.9629
Thermal Conductivity	Btu/(h*ft*°F)	0.0208597	0.0159251	0.0208502	0.107465 ?	0.111391
Surface Tension	lbf/ft				0.00205273 ?	0.00286707 ?
Net Ideal Gas Heating Value	Btu/ft^3	1220.31	1318.7	1219.9	3426.77	3171.98
Net Liquid Heating Value	Btu/lb	19975.2	19378	19961.3	9142.43	9222.24
Gross Ideal Gas Heating Value	Btu/ft^3	1342.34	1447.31	1341.91	3751.02	3473.97
Gross Liquid Heating Value	Btu/lb	21980.2	21276.7	21965.4	10033.4	10126.6

Remarks

* User Specified Values
? Extrapolated or Approximate Values

Copyright © 2002-2012 BRE Group, Ltd.

Licensed to Compliance Partners Incorporated and Affiliates

Process Streams Report
All Streams
Tabulated by Total Phase

Client Name:	Rowdy Pipeline	Job: Uprising Model
Location:	Uprising Compressor Station	
Flowsheet:	TEG Dehydrator	

Connections

	Still Vent PW	Still Vent Vapors	To Sales	uncondensed vapors
From Block	Still Vent Condenser	VSSL-101	XCHG-101	Still Vent Condenser
To Block	Dehy PW to tanks	Still Vent Condenser	--	--

Stream Composition

Mole Fraction	Still Vent PW %	Still Vent Vapors %	To Sales %	uncondensed vapors %
Carbon Dioxide	0.00173007	1.02708	1.32513	6.51544
Hydrogen Sulfide	0	0	0	0
Nitrogen	1.69341E-07	0.00336737	0.801493	0.0213909
Methane	0.000168587	1.65639	70.7169	10.5216
Ethane	0.000183519	1.70015	13.2202	10.7995
Propane	0.000292756	3.18079	9.0843	20.205
Isobutane	1.83845E-05	0.519746	1.1956	3.30168
n-Butane	0.000177557	2.11691	2.72399	13.4471
Isopentane	3.97843E-05	0.800613	0.458529	5.08582
n-Pentane	4.99386E-05	0.896174	0.363841	5.69283
Cyclopentane	9.09832E-05	0.385444	0.0152948	2.44811
n-Hexane	2.27198E-06	0.105778	0.0189511	0.671963
2-Methylpentane	4.57704E-06	0.164615	0.0405043	1.04572
3-Methylpentane	4.95207E-06	0.0735866	0.0130389	0.467445
Cyclohexane	6.38473E-05	0.223261	0.00837199	1.41796
Heptane	9.16225E-07	0.0803668	0.00625446	0.510539
Methylcyclohexane	4.68474E-06	0.0431103	0.00130775	0.273841
2,2,4-Trimethylpentane	2.14873E-08	0.00537761	0.000464393	0.0341621
Benzene	0.00379603	0.509551	0.00139098	3.21669
Toluene	0.000389985	0.0627177	0.00010993	0.396338
Ethylbenzene	8.48735E-06	0.00185575	3.07679E-06	0.0117435
m-Xylene	2.18269E-06	0.000431797	6.54847E-07	0.00273138
p-Xylene	8.68389E-06	0.00184323	3.03024E-06	0.011663
o-Xylene	4.19062E-06	0.000596781	7.0416E-07	0.00376872
Octane	1.04164E-08	0.000778197	3.73707E-05	0.00494358
Water	99.993	86.4395	0.00431185	13.892
TEG	4.58266E-07	3.8613E-07	1.94138E-05	6.81938E-12

Molar Flow	Still Vent PW lbmol/h	Still Vent Vapors lbmol/h	To Sales lbmol/h	uncondensed vapors lbmol/h
Carbon Dioxide	2.6315E-05	0.0185409	29.7592	0.0185146
Hydrogen Sulfide	0	0	0	0
Nitrogen	2.57574E-09	6.07878E-05	17.9995	6.07853E-05
Methane	2.56428E-06	0.0299012	1588.13	0.0298986
Ethane	2.79139E-06	0.0306911	296.892	0.0306884
Propane	4.45292E-06	0.0574198	204.011	0.0574153
Isobutane	2.79635E-07	0.00938246	26.8502	0.00938218
n-Butane	2.70071E-06	0.0382145	61.1741	0.0382118
Isopentane	6.05134E-07	0.0144527	10.2974	0.0144521
n-Pentane	7.59586E-07	0.0161778	8.17097	0.016177
Cyclopentane	1.38389E-06	0.00695804	0.343483	0.00695666
n-Hexane	3.45577E-08	0.00190951	0.425595	0.00190948
2-Methylpentane	6.96185E-08	0.00297163	0.909627	0.00297156
3-Methylpentane	7.53229E-08	0.00132839	0.292822	0.00132831
Cyclohexane	9.71141E-07	0.00403031	0.188014	0.00402934
Heptane	1.39361E-08	0.00145078	0.14046	0.00145077
Methylcyclohexane	7.12567E-08	0.000778229	0.0293687	0.000778158
2,2,4-Trimethylpentane	3.2683E-10	9.70767E-05	0.0104291	9.70764E-05
Benzene	5.77391E-05	0.00919843	0.031238	0.00914069

Copyright © 2002-2012 BRE Group, Ltd.
Licensed to Compliance Partners Incorporated and Affiliates

Process Streams Report
All Streams
Tabulated by Total Phase

Client Name:	Rowdy Pipeline	Job: Uprising Model
Location:	Uprising Compressor Station	
Flowsheet:	TEG Dehydrator	

Molar Flow	Still Vent PW lbmol/h	Still Vent Vapors lbmol/h	To Sales lbmol/h	uncondensed vapors lbmol/h
Toluene	5.93182E-06	0.00113218	0.00246876	0.00112625
Ethylbenzene	1.29096E-07	3.35E-05	6.90971E-05	3.33709E-05
m-Xylene	3.31996E-08	7.79481E-06	1.47062E-05	7.76161E-06
p-Xylene	1.32085E-07	3.3274E-05	6.80516E-05	3.31419E-05
o-Xylene	6.3741E-08	1.07731E-05	1.58137E-05	1.07094E-05
Octane	1.58437E-10	1.4048E-05	0.000839254	1.40479E-05
Water	1.52093	1.56041	0.0968335	0.0394762
TEG	6.97041E-09	6.97042E-09	0.000435985	1.93782E-14

Mass Fraction	Still Vent PW %	Still Vent Vapors %	To Sales %	uncondensed vapors %
Carbon Dioxide	0.0042256	2.02634	2.52513	6.33539
Hydrogen Sulfide	0	0	0	0
Nitrogen	2.63273E-07	0.00422881	0.972172	0.0132397
Methane	0.000150098	1.19123	49.1215	3.72937
Ethane	0.000306252	2.29176	17.2121	7.17475
Propane	0.000716438	6.28771	17.3446	19.6851
Isobutane	5.93023E-05	1.35424	3.00889	4.23994
n-Butane	0.00057274	5.51577	6.85528	17.2685
Isopentane	0.000159301	2.58949	1.43243	8.10724
n-Pentane	0.00019996	2.89857	1.13663	9.07488
Cyclopentane	0.000354129	1.21184	0.0464454	3.79347
n-Hexane	1.08659E-05	0.40864	0.0707123	1.27941
2-Methylpentane	2.189E-05	0.635936	0.151134	1.99104
3-Methylpentane	2.36836E-05	0.284278	0.0486522	0.890014
Cyclohexane	0.000298211	0.842321	0.0305077	2.63664
Heptane	5.09514E-06	0.361006	0.0271359	1.13029
Methylcyclohexane	2.55278E-05	0.189755	0.00555969	0.594061
2,2,4-Trimethylpentane	1.36218E-07	0.0275376	0.00229688	0.0862188
Benzene	0.016456	1.78429	0.00470453	5.55149
Toluene	0.00199419	0.259055	0.000438566	0.806843
Ethylbenzene	5.00071E-05	0.00883207	1.41435E-05	0.0275463
m-Xylene	1.28603E-05	0.00205505	3.01022E-06	0.00640689
p-Xylene	5.11651E-05	0.00877248	1.39295E-05	0.0273573
o-Xylene	2.4691E-05	0.00284026	3.23691E-06	0.00884013
Octane	6.60341E-08	0.00398498	0.000184835	0.0124767
Water	99.9743	69.8095	0.00336343	5.52955
TEG	3.81933E-06	2.59948E-06	0.000126235	2.26266E-11

Mass Flow	Still Vent PW lb/h	Still Vent Vapors lb/h	To Sales lb/h	uncondensed vapors lb/h
Carbon Dioxide	0.00115811	0.815975	1309.69	0.814817
Hydrogen Sulfide	0	0	0	0
Nitrogen	7.21553E-08	0.00170287	504.229	0.0017028
Methane	4.11373E-05	0.479688	25477.4	0.479647
Ethane	8.39345E-05	0.922853	8927.25	0.922769
Propane	0.000196354	2.53196	8995.98	2.53176
Isobutane	1.6253E-05	0.545329	1560.6	0.545313
n-Butane	0.000156971	2.22111	3555.57	2.22095
Isopentane	4.36597E-05	1.04274	742.947	1.0427
n-Pentane	5.48032E-05	1.16721	589.526	1.16715
Cyclopentane	9.70562E-05	0.487988	24.0895	0.487891
n-Hexane	2.97802E-06	0.164553	36.6758	0.16455
2-Methylpentane	5.9994E-06	0.256081	78.3874	0.256075
3-Methylpentane	6.49098E-06	0.114474	25.234	0.114468
Cyclohexane	8.17307E-05	0.339189	15.8232	0.339107
Heptane	1.39643E-06	0.145371	14.0743	0.14537
Methylcyclohexane	6.99642E-06	0.0764112	2.8836	0.0764042

Copyright © 2002-2012 BRE Group, Ltd.
Licensed to Compliance Partners Incorporated and Affiliates

Process Streams Report
All Streams
Tabulated by Total Phase

Client Name:	Rowdy Pipeline	Job: Uprising Model
Location:	Uprising Compressor Station	
Flowsheet:	TEG Dehydrator	

Mass Flow	Still Vent PW lb/h	Still Vent Vapors lb/h	To Sales lb/h	uncondensed vapors lb/h
2,2,4-Trimethylpentane	3.73333E-08	0.0110889	1.1913	0.0110889
Benzene	0.00451011	0.718507	2.44006	0.713996
Toluene	0.000546548	0.104317	0.227468	0.103771
Ethylbenzene	1.37055E-05	0.00355653	0.0073357	0.00354283
m-Xylene	3.52464E-06	0.000827536	0.00156129	0.000824011
p-Xylene	1.40228E-05	0.00353254	0.0072247	0.00351851
o-Xylene	6.76706E-06	0.00114373	0.00167886	0.00113696
Octane	1.8098E-08	0.00160469	0.0958667	0.00160467
Water	27.4	28.1112	1.74448	0.711174
TEG	1.04677E-06	1.04677E-06	0.0654732	2.91008E-12

Stream Properties

Property	Units	Still Vent PW	Still Vent Vapors	To Sales	uncondensed vapors
Temperature	°F	120	195.655	93.3748	120 *
Pressure	psia	12.187	12.187	851.187	12.187
Mole Fraction Vapor	%	0	100	100	100
Mole Fraction Light Liquid	%	100	0	0	0
Mole Fraction Heavy Liquid	%	0	0	0	0
Molecular Weight	lb/lbmol	18.0186	22.3069	23.0952	45.2602
Mass Density	lb/ft^3	61.6693	0.0389166	4.26026	0.0896311
Molar Flow	lbmol/h	1.52104	1.8052	2245.75	0.284164
Mass Flow	lb/h	27.407	40.2684	51866.2	12.8613
Vapor Volumetric Flow	ft^3/h	0.444419	1034.73	12174.4	143.492
Liquid Volumetric Flow	gpm	0.0554081	129.006	1517.85	17.8899
Std Vapor Volumetric Flow	MMSCFD	0.013853	0.0164411	20.4535	0.00258806
Std Liquid Volumetric Flow	sgpm	0.0547919	0.0994452	282.395	0.0446533
Compressibility		0.000572407	0.993297	0.777476	0.98926
Specific Gravity		0.988781	0.770195	0.797416	1.56271
API Gravity		10.0103			
Enthalpy	Btu/h	-185758	-173278	-8.37162E+07	-16995.9
Mass Enthalpy	Btu/lb	-6777.76	-4303.07	-1614.08	-1321.47
Mass Cp	Btu/(lb*°F)	0.982421	0.452683	0.637147	0.403441
Ideal Gas CpCv Ratio		1.32344	1.24633	1.22522	1.12269
Dynamic Viscosity	cP	0.570489	0.0124057	0.012887	0.00956409
Kinematic Viscosity	cSt	0.577507	19.9006	0.18884	6.66138
Thermal Conductivity	Btu/(h*ft*°F)	0.367447	0.0146159	0.0211042	0.0117043
Surface Tension	lbf/ft	0.00466614			
Net Ideal Gas Heating Value	Btu/ft^3	0.181326	324.155	1220.31	2058.28
Net Liquid Heating Value	Btu/lb	-1055.71	4729.42	19975.2	17057.3
Gross Ideal Gas Heating Value	Btu/ft^3	50.4966	394.283	1342.34	2234.46
Gross Liquid Heating Value	Btu/lb	3.96267	5922.43	21980.2	18534.5

Remarks

ProMax 3.2.12198.0
Copyright © 2002-2012 BRE Group, Ltd.
Licensed to Compliance Partners Incorporated and Affiliates