May 26, 2015

Wyoming Department of Environmental Quality
Air Quality Division
Herschler Building, 2-E
122 W. 25th Street
Cheyenne, WY 82002

RE: Air Permit Application
Stud Horse Butte (SHB) 6-32 Central Facility
Sublette County, Wyoming

Dear NSR Permitting:

Jonah Energy LLC (Jonah Energy) is submitting this application under the Wyoming Air Quality Division's Oil and Gas Production Facilities Chapter 6, Section 2 Permitting Guidance Revised September 2013 for the Stud Horse Butte (SHB) 6-32 Central Facility.

The SHB 6-32 Central Facility is currently operating under Permit MD-16644, dated December 30, 2014. There are no new wells that have come online that are associated with this application. However, this application is being submitted as four (4) wells that are currently permitted under the SHB 1-33 Central Facility have been consolidated into the existing SHB 6-32 Central Facility. The SHB 1-33 Central Facility has had the production equipment removed from location and we are requesting the emissions from the SHB 1-33 air permit be incorporated into our emissions bank. We are submitting this air permit application to update the associated equipment and emissions.

The list of wells producing to the SHB 6-32 Central Facility and latest production that is being used for the basis of emissions are identified in the table below. The current production equipment that Jonah Energy is requesting to be permitted is included in the forms included with this application submittal. The use of dehydration unit control and the federally enforceable limits provided by the Division's permitting process ensure the dehydration unit is "synthetic minor" to Subpart HH Area Source MACT regulation.

It is important to note that historical emissions for the SHB 1-33 Central Facility wells had not previously been calculated, and emissions have not been included in the WDEQ offset spreadsheet for this Central Facility; therefore, historical emissions are also included with this application submittal. Historical emissions were calculated based on the equipment identified in Permit MD-1529, dated February 27, 2007, and the January-March 2008 production for each well that is now being routed to the SHB 6-32 Central Facility. Emissions from high-bleed pneumatic devices have also been added to the baseline emission calculations, since high-bleed pneumatic emissions were not included in the initial permit. Also, the pneumatic pump emissions were not required to be controlled under SHB 1-33 air permit MD-1529, so uncontrolled pneumatic pump emissions are included in the baseline calculations.

Consistent with the demonstration letter submitted on December 23, 2008, historic emissions are calculated using the production associated with each individual well from January 1 - March 31, 2008. Since these emissions are being eliminated they are considered “Emissions Credits”. The emissions credits are being used to offset the emissions listed in permit applications. When a permit has already been issued using the production from January 1 - March 31, 2008 to calculate the historical emissions the net increase/decrease in emissions related to the new permit application is calculated as the difference between the “Equipment Design/Current Actual” emissions of the modification and the emissions of the “Previous Permit”. Jonah Energy has developed a spreadsheet to track all permits submitted since April 1, 2008 that require offsets. The spreadsheet is included in this application as part of Jonah Energy’s demonstration that the proposed permitting actions will not prevent the attainment or maintenance of any ambient air quality standard, as required by WAQSR Chapter 6, Section 2(c)(ii).

Stud Horse Butte 6-32 Central Facility Well List

Well Name	API	First Date of Production	Maximum Gas Production (MMSCFD)	Maximum Condensate Production (BCPD)
Stud Horse Butte 6-32	49-035-22711	9/3/2003	13.0	105
Stud Horse Butte 7-32	49-035-22123	6/27/2000		
Stud Horse Butte 9-32	49-035-22059	5/4/2013		
Stud Horse Butte 10-32	49-035-22709	7/29/2003		
Stud Horse Butte 11-32	49-035-22058	4/27/2000		
Stud Horse Butte 13-32	49-035-21747	7/30/2003		
Stud Horse Butte 14-32	49-035-22707	8/6/2003		
Sutd Horse Butte 15-32	49-035-22057	5/3/2000		
Stud Horse Butte 27-32	49-035-23996	4/16/2012		
Stud Horse Butte 35-32	49-035-23728	2/4/2005		
Stud Horse Butte 36-32	49-035-23727	1/18/2005		
Stud Horse Butte 37-32	49-035-23605	10/16/2005		
Stud Horse Butte 38-32	49-035-23604	10/17/2005		
Stud Horse Butte 42-32	49-035-23881	10/14/2005		
Stud Horse Butte 44-32	49-035-23606	10/18/2005		
Stud Horse Butte 46-32	49-035-23729	2/25/2005		
Stud Horse Butte 49-32	49-035-23733	9/14/2005		
Stud Horse Butte 50-32	49-035-23723	9/17/2005		
Stud Horse Butte 51-32	49-035-23673	5/5/2005		
Stud Horse Butte 52-32	49-035-23671	10/1/2005		
Stud Horse Butte 53-32	49-035-23929	10/24/2005		
Stud Horse Butte 54-32	49-035-28629	11/19/2012		
Stud Horse Butte 55-32	49-035-23928	10/22/2005		
Stud Horse Butte 56-32	49-035-23686	5/4/2013		
Stud Horse Butte 57-32	49-035-23907	5/4/2013		
Stud Horse Butte 58-32	49-035-23687	8/22/2005		
Stud Horse Butte 59-32	49-035-23731	10/27/2005		

Stud Horse Butte 60-32	49-035-23730	10/28/2005		
Stud Horse Butte 61-32	49-035-23672	10/2/2005		
Stud Horse Butte 62-32	49-035-23930	10/4/2005		
Stud Horse Butte 63-32	49-035-23732	9/19/2005		
Stud Horse Butte 64-32	49-035-23722	9/13/2005		
Stud Horse Butte 66-32	49-035-23598	10/21/2005		
Stud Horse Butte 67-32	49-035-23599	10/14/2005		
Stud Horse Butte 69-32	49-035-25240	9/9/2007		
Stud Horse Butte 71-32	49-035-23267	8/20/2005		
Stud Horse Butte 72-32	49-035-25287	9/12/2007		
Stud Horse Butte 74-32	49-035-25227	9/23/2007		
Stud Horse Butte 75-32	49-035-23633	3/4/2005		
Stud Horse Butte 76-32	49-035-23632	3/25/2004		
Stud Horse Butte 77-32	49-035-23874	5/19/2005		
Stud Horse Butte 78-32	49-035-23600	4/29/2005		
Stud Horse Butte 90-32	49-035-28519	4/15/2012		
Stud Horse Butte 98-32	49-035-28503	4/17/2012		
Stud Horse Butte 109-32	49-035-28628	1/4/2013		
Stud Horse Butte 110-32	49-035-28627	12/6/2012		
Stud Horse Butte 111-32	49-035-28626	1/5/2013		
Stud Horse Butte 123-32	49-035-28724	5/4/2013		
Stud Horse Butte 124-32	49-035-28723	5/4/2013		
Stud Horse Butte 5-33	49-035-22102	9/10/2000		
Stud Horse Butte 6-33	49-035-22574	2/12/2002		
Stud Horse Butte 7-33	49-035-22103	11/2/2000		
Stud Horse Butte 8-33	49-035-22573	6/30/2003		
Stud Horse Butte 33-33	49-035-23614	3/23/2005		
Stud Horse Butte 34-33	49-035-23617	3/26/2005		
Stud Horse Butte 35-33	49-035-23626	9/16/2004		
Stud Horse Butte 36-33	49-035-23997	9/16/2005		
Stud Horse Butte 37-33	49-035-23580	5/5/2005		
Stud Horse Butte 38-33	49-035-23581	5/3/2005		
Stud Horse Butte 39-33	49-035-23612	5/21/2005		
Stud Horse Butte 41-33	49-035-28712	Producing		
Stud Horse Butte 42-33	49-035-23628	6/6/2005		
Stud Horse Butte 43-33	49-035-23579	5/5/2005		
Stud Horse Butte 44-33	49-035-23850	5/5/2005		
Stud Horse Butte 45-33	49-035-23627	9/16/2005		
Stud Horse Butte 46-33	49-035-23625	9/23/2005		
Stud Horse Butte 47-33	49-035-23835	3/23/2005		
Stud Horse Butte 48-33	49-035-23616	3/24/2005		
Stud Horse Butte 52-33	49-035-23995	9/16/2005		
Stud Horse Butte 93-33	49-035-28749	5/5/2014		
Stud Horse Butte 99-33	49-035-28714	Producing		
Previously Permitted Under SHB 1-33 CDP - Permit MD-1529				
Stud Horse Butte 1-33	49-035-21454	Prior to 1/1/2007		

Stud Horse Butte 17-33	49-035-23992	Prior to 1/1/2007		
Stud Horse Butte 31-33	49-035-23999	Prior to 1/1/2007		
Stud Horse Butte 32-33	49-035-23993	Prior to 1/1/2007		

If you have any questions please contact Charles Cornell at (720) 577-1251 or via email at chuck.cornell@jonahenergy.com.

Sincerely,

Charles Cornell
Sr. Regulatory Lead

Revised 1/22/2015

WYOMING DEPARTMENT OF ENVIRONMENTAL QUALITY

Air Quality Division

New Source Review Permit Application Form

Is this an addendum to an existing application?

Yes _____ No **X** Date of Application: 5/26/2015

Previous Application #: _____

COMPANY INFORMATION:

Company Name: Jonah Energy LLC
Address: 707 17th Street, Suite 2700
City: Denver State: Colorado Zip Code: 80202
Country: USA Phone Number: 720-577-1000

FACILITY INFORMATION:

Facility Name: Stud Horse Butte 6-32
New Facility or Existing Facility: Existing
Facility Description: Natural Gas Production Facility
Facility Class: Synthetic Minor Operating Status: Operating
Facility Type: Production Site

For Oil & Gas Production Sites ONLY:
First Date of Production (FDOP)/Date of Modification: **Not Applicable for this application**
Does production at this facility contain H2S?* No
If yes, contact the Division.
API Number(s): See API Numbers associated with wells on cover letter to application

NAICS Code: 211111 Crude Petroleum and Natural Gas Extraction

FACILITY LOCATION:

***Enter the facility location in either the latitude/longitude area or section/township/range area. Both are not required.**
Physical Address: _____
City: _____ Zip Code: _____
State: WY County: _____

OR

Latitude: 42.44059 Longitude: -109.74538 County: Sublette
Quarter Quarter: SE Quarter: NW
Section: 32 Township: 29N Range: 108W

For longitude and latitude, use NAD 83/WGS84 datum and 5 digits after the decimal (i.e. 41.12345, -107.56789)

CONTACT INFORMATION:

***Note that an Environmental AND NSR Permitting Contact is required for your application to be deemed complete by the agency.**
Title: Mr. First Name: Charles
Last Name: Cornell
Company Name: Jonah Energy LLC
Job Title: Sr. Regulatory Lead
Address: 707 17th Street, Suite 2700
City: Denver State: Colorado
Zip Code: 80202
Primary Phone No.: 970-577-1251 E-mail: chuck.cornell@jonahenergy.com
Mobile Phone No.: 970-988-6067 Fax No.: _____
Contact Type: Environmental contact Start Date: 10/6/2014

Additional Contact Type (if needed): NSR Permitting contact
Title: First Name:
Last Name:
Company Name:
Job Title:
Address:
City: State:
Zip Code:
Primary Phone No.: E-mail:
Mobile Phone No.: Fax No.:
Contact Type: Start Date:

FACILITY APPLICATION INFORMATION:

General Info:

Has the facility changed location or is it a new/ greenfield facility?	No
Has a Land Use Planning document been included in this application?	No
Is the facility located in a sage grouse core area?*	No
If the facility is in a sage grouse core area, what is the WER number?	

** For questions about sage grouse core area, contact WY Game & Fish Department.*

Federal Rules Applicability - Facility Level:

Prevention of Significant Deterioration (PSD):	No
Non-Attainment New Source Review:	No

Modeling Section:

Has the Air Quality Division been contacted to determine if modeling is required?	No
Is a modeling analysis part of this application?	No
Is the proposed project subject to Prevention of Significant Deterioration (PSD) requirements?	No
Has the Air Quality Division been notified to schedule a pre-application meeting?	No
Has a modeling protocol been submitted to and approved by the Air Quality Division?	No
Has the Air Quality Division received a Q/D analysis to submit to the respective FLMs to determine the need for an AQRV analysis?	No

Required Attachments:

Facility Map	☑
Process Flow Diagram	☑
Modeling Analysis (if applicable)	☐
Land Use Planning Document	☐
Detailed Project Description	☑
Emissions Calculations	☑

I, Charles Cornell (Responsible Official (Printed Name)) Sr. Regulatory Lead (Title)

an Official Representative of the Company, state that I have knowledge of the facts herein set forth and that the same are true and correct to the best of my knowledge and belief. I further certify that the operational information provided and emission rates listed on this application reflect the anticipated emissions due to the operation of this facility. The facility will operate in compliance with all applicable Wyoming Air Quality Standards and Regulations.

Signature: (ink) Date: 5/26/2015

Revised 1/22/2015

Specific Emission Unit Attributes:

Heater/Chiller

Company Equipment ID: 001

Company Equipment Description: TEG Reboiler #1

Operating Status: Operating

Initial Construction Commencement Date: Prior to 1/1/2015

Initial Operation Commencement Date: Prior to 1/1/2015

Most Recent Construction/ Modification Commencement Date: Prior to 1/1/2015

Most Recent Operation Commencement Date: Prior to 1/1/2015

Select reason(s) for this emissions unit being included in this application (must be completed regardless of date of installation or modification):

Reason: Other

If reason is ***Reconstruction*** or ***Temporary Permit*** or ***Other,*** please explain below:

Re-submitting application due to new wells coming online at existing production facility

Firing Type: Indirect

Heat Input Rating: 0.75 Units: MMBtu/hr

Primary Fuel Type: Field Gas

Secondary Fuel Type:

Heat Content of Fuel: 1112 Units: BTU/scf

Fuel Sulfur Content: Neg Units:

SCC Codes: List all Source Classification Code(s) (SCC) that describe the process(es) performed by the emission source (e.g., 1-02-002-04).

31000228

Potential Operating Schedule: Provide the operating schedule for this emission unit.

Hours/day: 24

Hours/year: 8760

Control Equipment: No

If yes, please fill out and attach the appropriate Control Device and Release Point Information worksheets.

Best Available Control Technology (BACT): Was a BACT Analysis completed for this emission unit?

☐ Yes ☑ No

Pollutant: _____

Proposed BACT: _____

*If yes, attach BACT Analysis with this application.

Lowest Achievable Emission Rate (LAER): Was a LAER Analysis completed for this emission unit?

☐ Yes ☑ No

Pollutant: _____

Proposed LAER: _____

*If yes, attach LAER Analysis with this application.

Federal and State Rule Applicability:

New Source Performance Standards (NSPS): Not Affected

New Source Performance Standard are listed under 40 CFR 60-Standards of Performance for New Stationary Sources.

NSPS Subpart: _____

National Emission Standards for Hazardous Air Pollutants (NESHAP Part 61): Not Affected

National Emissions Standards for Hazardous Air Pollutants (NESHAP Part 61) are listed under 40 CFR 61. (These include asbestos, benzene, beryllium, mercury, and vinyl chloride).

Part 61 NESHAP Subpart: _____

National Emission Standards for Hazardous Air Pollutants (NESHAP Part 63): Not Affected

National Emission Standards for Hazardous Air Pollutants (NESHAP Part 63) standards are listed under 40 CFR 63

Part 63 NESHAP Subpart: _____

Prevention of Significant Deterioration (PSD): Not Affected

These rules are found under WAQSR Chapter 6, Section 4.

Non-Attainment New Source Review: Not Affected

These rules are found under WAQSR Chapter 6, Section 13.

Revised 1/22/2015

Specific Emission Unit Attributes:

Heater/Chiller

Company Equipment ID: 002

Company Equipment Description: TEG Dehy Flash Tank Heater #1

Operating Status: Operating

Initial Construction Commencement Date: Prior to 1/1/2015

Initial Operation Commencement Date: Prior to 1/1/2015

Most Recent Construction/ Modification Commencement Date: Prior to 1/1/2015

Most Recent Operation Commencement Date: Prior to 1/1/2015

Select reason(s) for this emissions unit being included in this application (must be completed regardless of date of installation or modification):

Reason: Other

If reason is ***Reconstruction*** or ***Temporary Permit*** or ***Other,*** please explain below:

Re-submitting application due to new wells coming online at existing production facility

Firing Type: Indirect

Heat Input Rating: 0.12 Units: MMBtu/hr

Primary Fuel Type: Field Gas

Secondary Fuel Type:

Heat Content of Fuel: 1112 Units: BTU/scf

Fuel Sulfur Content: Neg Units:

SCC Codes: List all Source Classification Code(s) (SCC) that describe the process(es) performed by the emission source (e.g., 1-02-002-04).

2310021100

Potential Operating Schedule: Provide the operating schedule for this emission unit.

Hours/day: 24

Hours/year: 8760

Control Equipment: No

If yes, please fill out and attach the appropriate Control Device and Release Point Information worksheets.

Best Available Control Technology (BACT): Was a BACT Analysis completed for this emission unit?

☐ Yes ☑ No

Pollutant: _____

Proposed BACT: _____

*If yes, attach BACT Analysis with this application.

Lowest Achievable Emission Rate (LAER): Was a LAER Analysis completed for this emission unit?

☐ Yes ☑ No

Pollutant: _____

Proposed LAER: _____

*If yes, attach LAER Analysis with this application.

Federal and State Rule Applicability:

New Source Performance Standards (NSPS): Not Affected

New Source Performance Standard are listed under 40 CFR 60-Standards of Performance for New Stationary Sources.

NSPS Subpart: _____

National Emission Standards for Hazardous Air Pollutants (NESHAP Part 61): Not Affected

National Emissions Standards for Hazardous Air Pollutants (NESHAP Part 61) are listed under 40 CFR 61. (These include asbestos, benzene, beryllium, mercury, and vinyl chloride).

Part 61 NESHAP Subpart: _____

National Emission Standards for Hazardous Air Pollutants (NESHAP Part 63): Not Affected

National Emission Standards for Hazardous Air Pollutants (NESHAP Part 63) standards are listed under 40 CFR 63

Part 63 NESHAP Subpart: _____

Prevention of Significant Deterioration (PSD): Not Affected

These rules are found under WAQSR Chapter 6, Section 4.

Non-Attainment New Source Review: Not Affected

These rules are found under WAQSR Chapter 6, Section 13.

Revised 1/22/2015

Specific Emission Unit Attributes:

Heater/Chiller

Company Equipment ID: 003

Company Equipment Description: Indirect Heater #1 - 1.5 MMBtu/hr unit

Operating Status: Operating

Initial Construction Commencement Date: Prior to 1/1/2015

Initial Operation Commencement Date: Prior to 1/1/2015

Most Recent Construction/ Modification Commencement Date: Prior to 1/1/2015

Most Recent Operation Commencement Date: Prior to 1/1/2015

Select reason(s) for this emissions unit being included in this application (must be completed regardless of date of installation or modification):

Reason: Other

If reason is ***Reconstruction*** or ***Temporary Permit*** or ***Other,*** please explain below:

Re-submitting application due to new wells coming online at existing production facility

Firing Type: Indirect

Heat Input Rating: 1.5 Units: MMBtu/hr

Primary Fuel Type: Field Gas

Secondary Fuel Type:

Heat Content of Fuel: 1112 Units: BTU/scf

Fuel Sulfur Content: Neg Units:

SCC Codes: List all Source Classification Code(s) (SCC) that describe the process(es) performed by the emission source (e.g., 1-02-002-04).

2310021100

Potential Operating Schedule: Provide the operating schedule for this emission unit.

Hours/day: 24

Hours/year: 8760

Control Equipment: No

If yes, please fill out and attach the appropriate Control Device and Release Point Information worksheets.

Best Available Control Technology (BACT): Was a BACT Analysis completed for this emission unit?

☐ Yes ☑ No

Pollutant: _____

Proposed BACT: _____

*If yes, attach BACT Analysis with this application.

Lowest Achievable Emission Rate (LAER): Was a LAER Analysis completed for this emission unit?

☐ Yes ☑ No

Pollutant: _____

Proposed LAER: _____

*If yes, attach LAER Analysis with this application.

Federal and State Rule Applicability:

New Source Performance Standards (NSPS): Not Affected

New Source Performance Standard are listed under 40 CFR 60-Standards of Performance for New Stationary Sources.

NSPS Subpart: _____

National Emission Standards for Hazardous Air Pollutants (NESHAP Part 61): Not Affected

National Emissions Standards for Hazardous Air Pollutants (NESHAP Part 61) are listed under 40 CFR 61. (These include asbestos, benzene, beryllium, mercury, and vinyl chloride).

Part 61 NESHAP Subpart: _____

National Emission Standards for Hazardous Air Pollutants (NESHAP Part 63): Not Affected

National Emission Standards for Hazardous Air Pollutants (NESHAP Part 63) standards are listed under 40 CFR 63

Part 63 NESHAP Subpart: _____

Prevention of Significant Deterioration (PSD): Not Affected

These rules are found under WAQSR Chapter 6, Section 4.

Non-Attainment New Source Review: Not Affected

These rules are found under WAQSR Chapter 6, Section 13.

Specific Emission Unit Attributes:

Heater/Chiller

Company Equipment ID: 004
Company Equipment Description: Indirect Heater #2 - 0.5 MMBtu/hr unit

Operating Status: Operating
Initial Construction Commencement Date: Prior to 1/1/2015
Initial Operation Commencement Date: Prior to 1/1/2015
Most Recent Construction/ Modification Commencement Date: Prior to 1/1/2015

Most Recent Operation Commencement Date: Prior to 1/1/2015

Select reason(s) for this emissions unit being included in this application (must be completed regardless of date of installation or modification):

Reason: Other

If reason is ***Reconstruction*** or ***Temporary Permit*** or ***Other,*** please explain below:

Re-submitting application due to new wells coming online at existing production facility

Firing Type: Indirect
Heat Input Rating: 0.5 Units: MMBtu/hr
Primary Fuel Type: Field Gas
Secondary Fuel Type:
Heat Content of Fuel: 1112 Units: BTU/scf
Fuel Sulfur Content: Neg Units:

SCC Codes: List all Source Classification Code(s) (SCC) that describe the process(es) performed by the emission source (e.g., 1-02-002-04).

2310021100

Potential Operating Schedule: Provide the operating schedule for this emission unit.

Hours/day: 24
Hours/year: 8760

Control Equipment: No

If yes, please fill out and attach the appropriate Control Device and Release Point Information worksheets.

Best Available Control Technology (BACT): Was a BACT Analysis completed for this emission unit?

☐ Yes ☑ No

Pollutant: _____

Proposed BACT: _____

*If yes, attach BACT Analysis with this application.

Lowest Achievable Emission Rate (LAER): Was a LAER Analysis completed for this emission unit?

☐ Yes ☑ No

Pollutant: _____

Proposed LAER: _____

*If yes, attach LAER Analysis with this application.

Federal and State Rule Applicability:

New Source Performance Standards (NSPS): Not Affected

New Source Performance Standard are listed under 40 CFR 60-Standards of Performance for New Stationary Sources.

NSPS Subpart: _____

National Emission Standards for Hazardous Air Pollutants (NESHAP Part 61): Not Affected

National Emissions Standards for Hazardous Air Pollutants (NESHAP Part 61) are listed under 40 CFR 61. (These include asbestos, benzene, beryllium, mercury, and vinyl chloride).

Part 61 NESHAP Subpart: _____

National Emission Standards for Hazardous Air Pollutants (NESHAP Part 63): Not Affected

National Emission Standards for Hazardous Air Pollutants (NESHAP Part 63) standards are listed under 40 CFR 63

Part 63 NESHAP Subpart: _____

Prevention of Significant Deterioration (PSD): Not Affected

These rules are found under WAQSR Chapter 6, Section 4.

Non-Attainment New Source Review: Not Affected

These rules are found under WAQSR Chapter 6, Section 13.

Specific Emission Unit Attributes:

Dehydration Unit

Company Equipment ID: 005
Company Equipment Description: 20 MMSCFD TEG Dehydration Unit #1

Operating Status: Operating
Initial Construction Commencement Date: Prior to 1/1/2015
Initial Operation Commencement Date: Prior to 1/1/2015
Most Recent Construction/ Modification Commencement Date: Prior to 1/1/2015

Most Recent Operation Commencement Date: Prior to 1/1/2015

Select reason(s) for this emissions unit being included in this application (must be completed regardless of date of installation or modification):

Reason: Other

If reason is ***Reconstruction*** or ***Temporary Permit*** or ***Other,*** please explain below:

Re-submitting application due to new wells coming online at existing production facility

Dehydration Type: TEG
Design Capacity (MMscf/day): 20
Temperature of Wet Gas (F): 67
Water Content of Dry Gas (lbs H2O/MMscf): 5
Pressure of Wet Gas (psig): 227
Manufacturer Name of Glycol Circulation Pump: Kimray
Model Name and Number of Glycol Circulation Pump: 20015 SC; 3 pumps total (one spare)
Water Content of Wet Gas (lbs H2O/MMscf): Saturated
Flow Rate of Dry Gas (MMscfd): 13.0
Type of Glycol Circulation Pump: Gas
Pump Volume Ratio (acfm/gpm): 0.08
Actual LEAN Glycol Circulation Rate (gpm): 6.67
Maximum LEAN Glycol Circulation Rate (gpm): 6.67
Source of Motive Gas for Pump: Field Gas
Include Glycol Flash Separator?: Yes
Flash Tank Off Gas Stream (scf/hr): 643
Flash Tank Operating Temperature (F): 150
Flash Tank Operating Pressure (psig): 50
Where are Flash Vapors Routed?: Fuel or Enclosed Combustor
Is Vessel Heated?: Yes
Additional Gas Stripping?: No
Stripppping Gas Rate (scf/min):
Source of Stripping Gas:

SCC Codes: List all Source Classification Code(s) (SCC) that describe the process(es) performed by the emission source (e.g., 1-02-002-04).

2310021400

Potential Operating Schedule: Provide the operating schedule for this emission unit.

Hours/day: 24
Hours/year: 8760

Control Equipment: Yes

If yes, please fill out and attach the appropriate Control Device and Release Point Information worksheets.

Best Available Control Technology (BACT): Was a BACT Analysis completed for this emission unit?

☐ Yes ☑ No

Pollutant: _____

Proposed BACT: _____

*If yes, attach BACT Analysis with this application.

Lowest Achievable Emission Rate (LAER): Was a LAER Analysis completed for this emission unit?

☐ Yes ☑ No

Pollutant: _____

Proposed LAER: _____

*If yes, attach LAER Analysis with this application.

Federal and State Rule Applicability:

New Source Performance Standards (NSPS): Not Affected

New Source Performance Standard are listed under 40 CFR 60- Standards of Performance for New Stationary Sources.

NSPS Subpart: _____

National Emission Standards for Hazardous Air Pollutants (NESHAP Part 61): Not Affected

National Emissions Standards for Hazardous Air Pollutants (NESHAP Part 61) are listed under 40 CFR 61. (These include asbestos, benzene, beryllium, mercury, and vinyl chloride).

Part 61 NESHAP Subpart: _____

National Emission Standards for Hazardous Air Pollutants (NESHAP Part 63): Subject, but exempt

National Emission Standards for Hazardous Air Pollutants (NESHAP Part 63) standards are listed under 40 CFR 63

Part 63 NESHAP Subpart: HH

Prevention of Significant Deterioration (PSD): Not Affected

These rules are found under WAQSR Chapter 6, Section 4.

Non-Attainment New Source Review: Not Affected

These rules are found under WAQSR Chapter 6, Section 13.

Specific Emission Unit Attributes:

Storage Tank/Silo

Company Equipment ID: 006
Company Equipment Description: Condensate Tanks; Six (6) 400-BBL

Operating Status: Operating
Initial Construction Commencement Date: Prior to 1/1/2015
Initial Operation Commencement Date: Prior to 1/1/2015
Most Recent Construction/ Modification Commencement Date: Prior to 1/1/2015

Most Recent Operation Commencement Date: Prior to 1/1/2015

Select reason(s) for this emissions unit being included in this application (must be completed regardless of date of installation or modification):

Reason: Other

If reason is ***Reconstruction*** or ***Temporary Permit*** or ***Other,*** please explain below:

Re-submitting application due to new wells coming online at existing production facility

Material Type: Liquid
Description of Material Stored: Condensate

Capacity: 2400 BBLS (6 x 400 bbls) Units: barrels
Maximum Throughput: 105 Units: barrels/day
Maximum Hourly Throughput: 4.375 Units: barrels/hr
Operating Pressure (psig): 0.25
Vapor Pressure of Material Stored (psig): ~7
Is Tank Heated?: No

SCC Codes: List all Source Classification Code(s) (SCC) that describe the process(es) performed by the emission source (e.g., 1-02-002-04).

2310021010

Potential Operating Schedule: Provide the operating schedule for this emission unit.
Hours/day: 24
Hours/year: 8760

Control Equipment: Yes

If yes, please fill out and attach the appropriate Control Device and Release Point Information worksheets.

Best Available Control Technology (BACT): Was a BACT Analysis completed for this emission unit?

☐ Yes ☑ No

Pollutant: _____

Proposed BACT: _____

*If yes, attach BACT Analysis with this application.

Lowest Achievable Emission Rate (LAER): Was a LAER Analysis completed for this emission unit?

☐ Yes ☑ No

Pollutant: _____

Proposed LAER: _____

*If yes, attach LAER Analysis with this application.

Federal and State Rule Applicability:

New Source Performance Standards (NSPS): Subject, but exempt

New Source Performance Standard are listed under 40 CFR 60-
Standards of Performance for New Stationary Sources.

NSPS Subpart: *Subpart OOOO*

National Emission Standards for Hazardous Air Pollutants (NESHAP Part 61): Not Affected

National Emissions Standards for Hazardous Air Pollutants (NESHAP Part 61) are listed under 40 CFR 61. (These include asbestos, benzene, beryllium, mercury, and vinyl chloride).

Part 61 NESHAP Subpart: _____

National Emission Standards for Hazardous Air Pollutants (NESHAP Part 63): Not Affected

National Emission Standards for Hazardous Air Pollutants (NESHAP Part 63) standards are listed under 40 CFR 63

Part 63 NESHAP Subpart: _____

Prevention of Significant Deterioration (PSD): Not Affected

These rules are found under WAQSR Chapter 6, Section 4.

Non-Attainment New Source Review: Not Affected

These rules are found under WAQSR Chapter 6, Section 13.

Specific Emission Unit Attributes:

Pneumatic Equipment (Pumps and Controllers)

Company Equipment ID: 007

Company Equipment Description: Pneumatic Equipment - Pneumatic Pumps; 4 pumps total

Operating Status: Operating

Initial Construction Commencement Date: Prior to 1/1/2015

Initial Operation Commencement Date: Prior to 1/1/2015

Most Recent Construction/ Modification Commencement Date: Prior to 1/1/2015

Most Recent Operation Commencement Date: Prior to 1/1/2015

Select reason(s) for this emissions unit being included in this application (must be completed regardless of date of installation or modification):

Reason: Other

If reason is ***Reconstruction*** or ***Temporary Permit*** or ***Other,*** please explain below:

Re-submitting application due to new wells coming online at existing production facility

Type of Equipment: Pump

Bleed/Consumption Rate (cfh): N/A

Controller Type:

Motive Force: Field Gas

VOC Content (%): 10.3

HAP Content (%): 0.4

SCC Codes: List all Source Classification Code(s) (SCC) that describe the process(es) performed by the emission source (e.g., 1-02-002-04).

2310021300

Potential Operating Schedule: Provide the operating schedule for this emission unit.

Hours/day: 24

Hours/year: 4380

Control Equipment: Yes

If yes, please fill out and attach the appropriate Control Device and Release Point Information worksheets.

Best Available Control Technology (BACT): Was a BACT Analysis completed for this emission unit?

☐ Yes ☑ No

Pollutant: _____

Proposed BACT: _____

*If yes, attach BACT Analysis with this application.

Lowest Achievable Emission Rate (LAER): Was a LAER Analysis completed for this emission unit?

☐ Yes ☑ No

Pollutant: _____

Proposed LAER: _____

*If yes, attach LAER Analysis with this application.

Federal and State Rule Applicability:

New Source Performance Standards (NSPS): Not Affected

New Source Performance Standard are listed under 40 CFR 60-Standards of Performance for New Stationary Sources.

NSPS Subpart: _____

National Emission Standards for Hazardous Air Pollutants (NESHAP Part 61): Not Affected

National Emissions Standards for Hazardous Air Pollutants (NESHAP Part 61) are listed under 40 CFR 61. (These include asbestos, benzene, beryllium, mercury, and vinyl chloride).

Part 61 NESHAP Subpart: _____

National Emission Standards for Hazardous Air Pollutants (NESHAP Part 63): Not Affected

National Emission Standards for Hazardous Air Pollutants (NESHAP Part 63) standards are listed under 40 CFR 63

Part 63 NESHAP Subpart: _____

Prevention of Significant Deterioration (PSD): Not Affected

These rules are found under WAQSR Chapter 6, Section 4.

Non-Attainment New Source Review: Not Affected

These rules are found under WAQSR Chapter 6, Section 13.

Specific Emission Unit Attributes:

Pneumatic Equipment (Pumps and Controllers)

Company Equipment ID: 007

Company Equipment Description: Pneumatic Equipment - Pneumatic Devices; 9 devices

Operating Status: Operating

Initial Construction Commencement Date: Prior to 1/1/2015

Initial Operation Commencement Date: Prior to 1/1/2015

Most Recent Construction/ Modification Commencement Date: Prior to 1/1/2015

Most Recent Operation Commencement Date: Prior to 1/1/2015

Select reason(s) for this emissions unit being included in this application (must be completed regardless of date of installation or modification):

Reason: Other

If reason is ***Reconstruction*** or ***Temporary Permit*** or ***Other,*** please explain below:

Re-submitting application due to new wells coming online at existing production facility

Type of Equipment: Controller

Bleed/Consumption Rate (cfh): < 6

Controller Type: Continuous

Motive Force: Field Gas

VOC Content (%): 10.3

HAP Content (%): 0.4

SCC Codes: List all Source Classification Code(s) (SCC) that describe the process(es) performed by the emission source (e.g., 1-02-002-04).

2310021300

Potential Operating Schedule: Provide the operating schedule for this emission unit.

Hours/day: 24

Hours/year: 8760

Control Equipment: No

If yes, please fill out and attach the appropriate Control Device and Release Point Information worksheets.

Best Available Control Technology (BACT): Was a BACT Analysis completed for this emission unit?

☐ Yes ☑ No

Pollutant: _____

Proposed BACT: _____

*If yes, attach BACT Analysis with this application.

Lowest Achievable Emission Rate (LAER): Was a LAER Analysis completed for this emission unit?

☐ Yes ☑ No

Pollutant: _____

Proposed LAER: _____

*If yes, attach LAER Analysis with this application.

Federal and State Rule Applicability:

New Source Performance Standards (NSPS): Not Affected

New Source Performance Standard are listed under 40 CFR 60-Standards of Performance for New Stationary Sources.

NSPS Subpart: _____

National Emission Standards for Hazardous Air Pollutants (NESHAP Part 61): Not Affected

National Emissions Standards for Hazardous Air Pollutants (NESHAP Part 61) are listed under 40 CFR 61. (These include asbestos, benzene, beryllium, mercury, and vinyl chloride).

Part 61 NESHAP Subpart: _____

National Emission Standards for Hazardous Air Pollutants (NESHAP Part 63): Not Affected

National Emission Standards for Hazardous Air Pollutants (NESHAP Part 63) standards are listed under 40 CFR 63

Part 63 NESHAP Subpart: _____

Prevention of Significant Deterioration (PSD): Not Affected

These rules are found under WAQSR Chapter 6, Section 4.

Non-Attainment New Source Review: Not Affected

These rules are found under WAQSR Chapter 6, Section 13.

Specific Emission Unit Attributes:

Loading/Unloading/Dump

Company Equipment ID: 008
Company Equipment Description: Condensate Tanker Truck Loading

Operating Status: Operating
Initial Construction Commencement Date: Prior to 1/1/2015
Initial Operation Commencement Date: Prior to 1/1/2015
Most Recent Construction/ Modification Commencement Date: Prior to 1/1/2015

Most Recent Operation Commencement Date: Prior to 1/1/2015

Select reason(s) for this emissions unit being included in this application (must be completed regardless of date of installation or modification):

Reason: Other

If reason is ***Reconstruction*** or ***Temporary Permit*** or ***Other,*** please explain below:

Re-submitting application due to new wells coming online at existing production facility

Type of Material: Liquid
Material Description: Condensate

Maximum Annual Throughput:	38,325	Units:	barrels/yr
Maximum Hourly Throughput:	240	Units:	barrels/hr

Detailed Description of Loading/Unloading/Dump Source: submerged fill, dedicated service

SCC Codes: List all Source Classification Code(s) (SCC) that describe the process(es) performed by the emission source (e.g., 1-02-002-04).

2310020800

Potential Operating Schedule: Provide the operating schedule for this emission unit.

Hours/day: 24
Hours/year: 8760

Control Equipment: No

If yes, please fill out and attach the appropriate Control Device and Release Point Information worksheets.

Best Available Control Technology (BACT): Was a BACT Analysis completed for this emission unit?

☐ Yes ☑ No

Pollutant: _____

Proposed BACT: _____

*If yes, attach BACT Analysis with this application.

Lowest Achievable Emission Rate (LAER): Was a LAER Analysis completed for this emission unit?

☐ Yes ☑ No

Pollutant: _____

Proposed LAER: _____

*If yes, attach LAER Analysis with this application.

Federal and State Rule Applicability:

New Source Performance Standards (NSPS): Not Affected

New Source Performance Standard are listed under 40 CFR 60-
Standards of Performance for New Stationary Sources.

NSPS Subpart: _____

National Emission Standards for Hazardous Air Pollutants (NESHAP Part 61): Not Affected

National Emissions Standards for Hazardous Air Pollutants (NESHAP Part 61) are listed under 40 CFR 61. (These include asbestos, benzene, beryllium, mercury, and vinyl chloride).

Part 61 NESHAP Subpart: _____

National Emission Standards for Hazardous Air Pollutants (NESHAP Part 63): Not Affected

National Emission Standards for Hazardous Air Pollutants (NESHAP Part 63) standards are listed under 40 CFR 63

Part 63 NESHAP Subpart: _____

Prevention of Significant Deterioration (PSD): Not Affected

These rules are found under WAQSR Chapter 6, Section 4.

Non-Attainment New Source Review: Not Affected

These rules are found under WAQSR Chapter 6, Section 13.

Specific Emission Unit Attributes:

Fugitives

Company Equipment ID: 009

Company Equipment Description: Fugitives

Operating Status: Operating

Initial Construction Commencement Date: Prior to 1/1/2015

Initial Operation Commencement Date: Prior to 1/1/2015

Most Recent Construction/ Modification Commencement Date: Prior to 1/1/2015

Most Recent Operation Commencement Date: Prior to 1/1/2015

Select reason(s) for this emissions unit being included in this application (must be completed regardless of date of installation or modification):

Reason: Other

If reason is ***Reconstruction*** or ***Temporary Permit*** or ***Other,*** please explain below:

Re-submitting application due to new wells coming online at existing production facility

Type of Fugitive Emission: Fugitive Leaks at O&G

SCC Codes: List all Source Classification Code(s) (SCC) that describe the process(es) performed by the emission source (e.g., 1-02-002-04).

2310020700

Potential Operating Schedule: Provide the operating schedule for this emission unit.

Hours/day: 24

Hours/year: 8760

Control Equipment: No

If yes, please fill out and attach the appropriate Control Device and Release Point Information worksheets.

Best Available Control Technology (BACT): Was a BACT Analysis completed for this emission unit?

☐ Yes ☑ No

Pollutant: _____

Proposed BACT: _____

*If yes, attach BACT Analysis with this application.

Lowest Achievable Emission Rate (LAER): Was a LAER Analysis completed for this emission unit?

☐ Yes ☑ No

Pollutant: _____

Proposed LAER: _____

*If yes, attach LAER Analysis with this application.

Federal and State Rule Applicability:

New Source Performance Standards (NSPS): Not Affected

New Source Performance Standard are listed under 40 CFR 60-
Standards of Performance for New Stationary Sources.

NSPS Subpart: _____

National Emission Standards for Hazardous Air Pollutants (NESHAP Part 61): Not Affected

National Emissions Standards for Hazardous Air Pollutants (NESHAP Part 61) are listed under 40 CFR 61. (These include asbestos, benzene, beryllium, mercury, and vinyl chloride).

Part 61 NESHAP Subpart: _____

National Emission Standards for Hazardous Air Pollutants (NESHAP Part 63): Not Affected

National Emission Standards for Hazardous Air Pollutants (NESHAP Part 63) standards are listed under 40 CFR 63

Part 63 NESHAP Subpart: _____

Prevention of Significant Deterioration (PSD): Not Affected

These rules are found under WAQSR Chapter 6, Section 4.

Non-Attainment New Source Review: Not Affected

These rules are found under WAQSR Chapter 6, Section 13.

Specific Emission Unit Attributes:

Storage Tank/Silo

Company Equipment ID: 010
Company Equipment Description: Produced Water Tanks; Three (3) 400-BBL

Operating Status: Operating
Initial Construction Commencement Date: Prior to 1/1/2015
Initial Operation Commencement Date: Prior to 1/1/2015
Most Recent Construction/ Modification Commencement Date: Prior to 1/1/2015

Most Recent Operation Commencement Date: Prior to 1/1/2015

Select reason(s) for this emissions unit being included in this application (must be completed regardless of date of installation or modification):

Reason: Other

If reason is ***Reconstruction*** or ***Temporary Permit*** or ***Other,*** please explain below:

Re-submitting application due to new wells coming online at existing production facility

Material Type: Liquid
Description of Material Stored: Produced Water

Capacity: 1200 BBLS (3 x 400 bbls) Units: barrels
Maximum Throughput: Units: barrels/day
Maximum Hourly Throughput: Units: barrels/hr
Operating Pressure (psig):
Vapor Pressure of Material Stored (psig):
Is Tank Heated?: No

SCC Codes: List all Source Classification Code(s) (SCC) that describe the process(es) performed by the emission source (e.g., 1-02-002-04).

2310021010

Potential Operating Schedule: Provide the operating schedule for this emission unit.

Hours/day: 24
Hours/year: 8760

Control Equipment: Yes

If yes, please fill out and attach the appropriate Control Device and Release Point Information worksheets.

Best Available Control Technology (BACT): Was a BACT Analysis completed for this emission unit?

☐ Yes ☑ No

Pollutant: _____

Proposed BACT: _____

*If yes, attach BACT Analysis with this application.

Lowest Achievable Emission Rate (LAER): Was a LAER Analysis completed for this emission unit?

☐ Yes ☑ No

Pollutant: _____

Proposed LAER: _____

*If yes, attach LAER Analysis with this application.

Federal and State Rule Applicability:

New Source Performance Standards (NSPS): Subject, but exempt

New Source Performance Standard are listed under 40 CFR 60-
Standards of Performance for New Stationary Sources.

NSPS Subpart: *Subpart OOOO*

National Emission Standards for Hazardous Air Pollutants (NESHAP Part 61): Not Affected

National Emissions Standards for Hazardous Air Pollutants (NESHAP Part 61) are listed under 40 CFR 61. (These include asbestos, benzene, beryllium, mercury, and vinyl chloride).

Part 61 NESHAP Subpart: _____

National Emission Standards for Hazardous Air Pollutants (NESHAP Part 63): Not Affected

National Emission Standards for Hazardous Air Pollutants (NESHAP Part 63) standards are listed under 40 CFR 63

Part 63 NESHAP Subpart: _____

Prevention of Significant Deterioration (PSD): Not Affected

These rules are found under WAQSR Chapter 6, Section 4.

Non-Attainment New Source Review: Not Affected

These rules are found under WAQSR Chapter 6, Section 13.

Revised 1/22/2015

Control Equipment: #1 Enclosed Combustor

Flare/Combustor

Manufacturer: TCI #1

Date Installed: Prior to 1/1/2015

Model Name and Number: TCI 4000

Company Control Equipment ID:

Company Control Equipment Description: Enclosed combustor

Pollutant(s) Controlled:

☐ CO	☐ NOx	☐ Pb	☐ SO2	☑ VOC	☐ PM	
☐ PM (FIL)	☐ PM Condensible	☐ PM 10 (FIL)	☐ PM 2.5 (FIL)	☐ PM 10	☐ PM 2.5	
☐ Other						

NOTE: The following fields require numeric values unless otherwise denoted with an asterisk*

Maximum Design Capacity (MMSCF/hr): 0.016666667

Minimum Design Capacity (MMSCF/hr): 0.005556

Design Control Efficiency (%): 98

Capture Efficiency (%):

Operating Control Efficiency (%): 98

Flare Type:* Enclosed

Elevated Flare Type:* N/A

Ignition Device:* Yes

Flame Presence Sensor:* Yes

Inlet Gas Temp (F): ~70

Flame Presence Type:* Thermocouple

Gas Flow Rate (acfm):

Outlet Gas Temp (F):

☑ This is the only control equipment on this air contaminant source

If not, this control equipment is: ☐ Primary ☐ Secondary ☐ Parallel

List all other emission units that are also vented to this control equipment:*

List all release point IDs associated with this control equipment:*

SUBLETTE COUNTY PERMITTED EMISSIONS April 1, 2008 - PRESENT

Date of Public Notice	Application Date	Application Number	Company	Facility	PermitNumber	PermitDate	CurrentVOC	CurrentNOx	Base Emissions				Delta VOC	Delta NOx	Offset VOC	Offset NOx	Trade VOC for N0x	Comments
									April 1, 2008 Emissions		Previous Permit							
									VOC	NO_x	VOC	NO_x						
	9/16/2008	7855	EnCana	Stud Horse Butte 10-28 CF	MD-7855		23.3	4.6	77.4	2.5	0	0	-54.1	2.1	-54.1	2.1	no	this permit is already issued so no NOx offsets are required
4/17/2008	3/14/2008	7519	EnCana	SAG 34-19	CT-7519	4/1/2009	12.8	0.9	10.6	0.6	0	0	2.2	0.3	2.2	0.3	yes	
1/8/2009	2/13/2008 & 8/13/2008	8200	EnCana	Stud Horse Butte 13-26 CF	MD-8200	4/1/2009	31.8	7.6	16.3	4.1	0	0	15.5	3.5	23.3	3.9	yes	
6/26/2008	5/7/2008	7761	EnCana	Stud Horse Butte 6-28 CF	MD-7761	4/1/2009	14.2	2.2	6.4	1.3	0	0	7.8	0.9	7.8	0.9	yes	
6/12/2008	4/22/2008	7692	EnCana	Stud Horse Butte 7-15 CF	MD-7692	4/1/2009	18.3	3.8	8.5	2.3	0	0	9.8	1.5	9.8	1.5	yes	
9/22/2008	6/17/2008	7905	EnCana	Jonah Workforce Facility	MD-7905	4/22/2009	14.3	11.5	9.2	13			5.1	-1.5	5.1	-1.5		Annual emissions reduction due to employee vehicle traffic of 13.0 tpy NO_x, 60.0 tpy CO, 9.2 tpy VOC, and 196.1 tpy PM.
1/8/2009	6/25/2008	7975	EnCana	Corona - SHB 15-19 CF	MD-7975	4/1/2009	29.3	6.5	81.7	1.7	0	0	-52.4	4.8	-52.4	4.8	yes	addition of 3 existing wells that had no dehy/tank controls and 1 well with no dehy controls
1/8/2009	5/16/2008	7807	EnCana	Stud Horse Butte 32-10	CT-7807	4/1/2009	5.1	1	4.9	1	0	0	0.2	0	0.2	0	no	
1/8/2009	5/21/2008 & 8/5/2008	8176	EnCana	Jonah Federal 11-18 CF	CT-8176	4/1/2009	11.3	2.3	5.3	1.5	0	0	6.0	0.8	9.0	0.9	yes	
1/8/2009	6/18/2008	7924	EnCana	Jonah Federal 1-5 CF	MD-7924	4/1/2009	13.8	3.9	25.4	2.8	0	0	-11.6	1.1	-11.6	1.1	yes	controlling pneumatic pumps
1/8/2009	6/25/2008	7972	EnCana	Jonah Federal 5-4 CF	MD-7972	4/1/2009	28.2	6.3	19.5	2.5	0	0	8.7	3.8	8.7	3.8	yes	
1/8/2009	6/25/2008	7973	EnCana	SOL 9-36	CT-7973	4/1/2009	4.7	1.2	0	0	0	0	4.7	1.2	4.7	1.2	yes	
1/8/2009	6/25/2008	7974	EnCana	Stud Horse Butte 12-36 CF	MD-7974	4/1/2009	28.1	6.1	90.4	3.7	0	0	-62.3	2.4	-62.3	2.5	yes	consolidating wells and controlling previously uncontrolled tanks and dehydration units
1/8/2009	12/5/2007	7083	EnCana	Stud Horse Butte 71-32 CF	MD-7083	4/1/2009	13	3.4	12.3	3.3	0	0	0.7	0.1	0.7	0.1	yes	
1/8/2009	12/27/2007	7162	EnCana	Stud Horse Butte 48-16	CT-7162	4/1/2009	11	0.6	11	0.6	0	0	0	0	0	0	yes	would have a decrease in VOC if pneumatic pumps were controlled (modified prior to 9/1/07 so control is not required)
	12/5/2007	7056	EnCana	Stud Horse Butte 16-26 CF	MD-7056	4/1/2009	16.7	1.6	15.7	1.5	0	0	1.0	0.1	1.0	0.1	yes	would have a decrease in VOC if pneumatic pumps were controlled (modified prior to 9/1/07 so control is not required)
1/8/2009	12/13/2007 & 8/13/2008	8199	EnCana	Yellow Point 8-13 CF	MD-8199	4/1/2009	18.4	3.4	9.2	1.4	0	0	9.2	2	13.8	2.2	yes	
1/8/2009	7/10/2008	8035	EnCana	Corona - SHB 10-31 CF	MD-8035	4/1/2009	29.3	6.8	89.8	4.2	0	0	-60.5	2.6	-60.5	2.6	yes	addition of 3 existing wells that had no dehy or tank controls
8/28/2008	7/29/2008	8095	EnCana	Yellow Point 4-12 CF	MD-8095	9/30/2008	31.9	4.4	219	15.7	0	0	-187.1	-11.3	-187.1	-11.3		consolidation of 29 wells which decreases the number of dehydration units / tanks now controlled at 2 of the existing wells / pneumatic pumps now controlled
1/8/2009	7/23/2008	8104	EnCana	Stud Horse Butte 4-27 CF	MD-8104	4/1/2009	22.6	4.5	34.7	1.5	0	0	-12.1	3	-12.1	3	yes	adding well to CF that has no dehy controls
1/8/2009	7/28/2008	8109	EnCana	Corona 3-31 CF	MD-8109	4/1/2009	20.1	3.6	20.9	1	0	0	-0.8	2.6	-0.8	2.6	yes	
1/8/2009	7/28/2008	8110	EnCana	Stud Horse Butte 11-26 CF	MD-8110	4/1/2009	35.1	8.8	18.2	2.1	0	0	16.9	6.7	16.9	6.7	yes	
1/8/2009	8/15/2008	8202	EnCana	Stud Horse Butte 11-17 CF	MD-8202	4/1/2009	30.5	6.1	57.1	1.7	0	0	-26.6	4.4	-26.6	4.8	yes	decrease due to consolidation of previously uncontrolled equipment
	9/18/2008	8132	EnCana	Section 32 Methanol Tank	wv-8132	9/18/2008	0.3	0	0	0	0	0	0.3	0	0.3	0		
1/8/2009	9/4/2008	8326	EnCana	Jonah Federal 1-6 CF	MD-8326	4/1/2009	22.7	5.2	45.6	3.4	0	0	-22.9	1.8	-22.9	2	yes	decrease due to consolidation of previously uncontrolled equipment
1/8/2009	9/15/2008	8357	EnCana	Yellow Point 2-1 CF	MD-8357	4/1/2009	23	4.9	25	2.5	0	0	-2	2.4	-2	2.6	yes	controlling pneumatic pumps
1/8/2009	9/15/2008	8358	EnCana	Stud Horse Butte 10-33 CF	MD-8358	4/1/2009	18.1	4.4	22.3	5.4	0	0	-4.2	-1	-4.2	-1		controlling pneumatic pumps / less heaters
1/8/2009	10/15/2008	8489	EnCana	SOL 2-2 CF	CT-8489	4/1/2009	4.3	0.9	0	0	0	0	4.3	0.9	6.5	1	yes	
NA	8/13/2008	7164	EnCana	Yellow Point 1-13 CF	MD-7164	7/1/2008	22.4	4.5	11.6	2.5	0	0	10.8	2	16.2	2.2	yes	short form application
NA	8/13/2008	7438	EnCana	Stud Horse Butte 16-34R CF	MD-7438	5/2/2008	19.4	4	7.7	1.5	0	0	11.7	2.5	17.8	2.8	yes	short form application
NA	8/13/2008	6758	EnCana	Stud Horse Butte 4-26 CF	MD-6758	5/2/2008	36.1	8.2	22	2.6	0	0	14.1	5.6	21.2	6.2	yes	short form application
NA	9/25/2008	7055	EnCana	Stud Horse Butte 7-26 CF	MD-7055	5/20/2008	38.1	8.6	14	3.4	0	0	24.1	5.2	36.2	5.7	yes	short form application
1/8/2009	10/2/2008	8440	EnCana	Corona-SHB 10-30 CF	MD-8440	4/1/2009	27.3	8.3	77.5	2.6	0	0	-50.2	5.7	-50.2	6.3	yes	consolidating wells and controlling previously uncontrolled tanks and dehydration units
1/8/2009	10/2/2008	8441	EnCana	Stud Horse Butte 11-36 CF	MD-8441	4/1/2009	18.5	4.1	62.5	1.6	0	0	-44	2.5	-44.0	2.8	yes	consolidating wells and controlling previously uncontrolled tanks and dehydration units
1/8/2009	10/7/2008	8458	EnCana	Jonah Federal 1-8 CF	MD-8458	4/1/2009	14.4	2.9	23.9	0.3	0	0	-9.5	2.6	-9.5	2.9	yes	controlling previously uncontrolled well
1/8/2009	10/8/2008	8467	EnCana	Stud Horse Butte 7-36 CF	MD-8467	4/1/2009	15.7	2.9	43.8	0.9	0	0	-28.1	2	-28.1	2.2	yes	consolidating wells and controlling previously uncontrolled tanks and dehydration units
1/8/2009	10/15/2008	8490	EnCana	Stud Horse Butte 11-20 CF	MD-8490	4/1/2009	35.6	8.9	144.4	7.1	0	0	-108.8	1.8	-108.8	2.0	yes	consolidating wells and controlling previously uncontrolled tanks and dehydration units
1/8/2009	10/16/2008	8498	EnCana	Stud Horse Butte 16-18 CF	MD-8498	4/1/2009	9.4	2.6	20	0.4	0	0	-10.6	2.2	-10.6	2.4	yes	consolidating wells and controlling previously uncontrolled tanks and dehydration units
1/8/2009	10/28/2008	8566	EnCana	Stud Horse Butte 122-10 CF	MD-8566	4/1/2009	18.2	3.7	16.4	0.4	0	0	1.8	3.3	2.7	3.6	yes	controlling previously uncontrolled dehy/tank emissions
1/8/2009	11/12/2008	8620	EnCana	Yellow Point 16-13 CF	CT-8620	4/1/2009	11.6	2.8	0	0	0	0	11.6	2.8	17.4	3.1	yes	
NA	4/1/2008	7561	EnCana	Jonah Office Building	wv-7561	10/27/2008	1.5	1	0	0	0.4	1.1	1.1	-0.1	1.1	-0.1	no	new facility, relinquishing authority to operate engines authorized under waivers AP-4396 and AP-4397
NA	3/10/2009	4633A	EnCana	Section 36 Water Disposal	CT-4633A	3/30/2009	1.1	2.7	0.0	0.0	1.1	2.7	0.0	0.0	0.0	0.0	no	Engine Swap
NA						4/1/2009									76.9	-76.9		Recognize offset trading VOC for Nox
NA	2/20/2009	9058	EnCana	Stud Horse Butte 13-26 CF	MD-8200	4/29/2009	31.8	7.6	0.0	0.0	31.8	7.6	0.0	0.0	0.0	0.0	NA	short form application no change in emisson from AP-8200
NA	3/4/2009	9094	EnCana	Corona-SHB 10-31 CF	MD-8035	10/26/2009	33.5	7.1	0.0	0.0	29.3	6.8	4.2	0.3	6.3	0.3	NA	Short Form
N/A	3/19/2009	9181	EnCana	Corona Stud Horse Butte 10-30	MD-8440	4/30/2009	27.3	8.3	0.0	0.0	27.3	8.3	0.0	0.0	0.0	0.0	NA	short form application no change in emisson from AP-8440
NA	4/1/2009	9257	EnCana	SOL 9-36	CT-7973	10/26/2009	7.8	2.0	0.0	0.0	4.7	1.2	3.1	0.8	4.7	0.9	NA	Short Form
	5/22/2009	9450	EnCana	Stud Horse Butte 3-27 CF	MD-7696	10/26/2009	24.9	4.8	104.5	2.0	0	0	-79.6	2.8	-79.6	3.1	NA	
NA	7/1/2009	9655	EnCana	Stud Horse Butte 11-17 CF	MD-8202	10/26/2009	30.5	6.2	0.0	0.0	30.5	6.1	0.0	0.1	0.0	0.1	NA	Short Form
NA	7/30/2009	9730	EnCana	Stud Horse Butte 15-19 CF	MD-7975	8/24/2009	11.0	2.6	0.0	0.0	29.3	6.5	-18.3	-3.9	-18.3	-3.9	NA	Permitting Actual Production instead of PTE- Short Form
NA	8/10/2009	9772	EnCana	Yellow Point 1-13 CF	MD-7164	8/24/2009	8.4	2.2	0.0	0.0	22.4	4.5	-14.0	-2.3	-14.0	-2.3	NA	Short Form Application- Permitting at Actual production instread of PTE
NA	8/20/2009	9800	EnCana	Stud Horse Butte 4-26 CF	MD-6758	10/26/2009	27.5	8.9	0.0	0.0	36.1	8.2	-8.6	0.7	-8.6	0.8	NA	Short Form Application- Permitting at Actual instead of PTE
9/25/2009	9/17/2009	8122	EnCana	Drill Rig Fleet	CT-8122	1/4/2010	79.0	282.0	97.1	457.1	0	0	-18.1	-175.1	-18.1	-175.1	NA	Drill Rig Fleet
10/2/2009	11/17/2008	8649	EnCana	Holmes State 1-36	CT-8649	1/19/2010	2.2	0.5	0.0	0.0	0.0	0.0	2.2	0.5	3.3	0.6	NA	
10/2/2009	11/26/2008	8691	EnCana	Cabrito 7-30 CF	MD-8691	1/19/2010	18.3	3.9	19.0	1.5	0.0	0.0	-0.7	2.4	-0.7	2.6	NA	Controlling Pneumatic pumps that did not requrie controls as of April 1, 2008
10/2/2009	11/26/2008	8692	EnCana	Yellow Point 1-12 CF	MD-8692	1/19/2010	14.8	3.9	50.4	4.9	0.0	0.0	-35.6	-1.0	-35.6	-1.0	NA	consolidating wells and controlling previously uncontrolled dehydration units and pnuematics
1/8/2009	11/21/2008	8673	EnCana	Stud Horse Butte 16-26 CF	MD-7056	10/26/2009	14.8	2.9	16.7	1.6	0.0	0.0	-1.9	1.3	-1.9	1.4	NA	
10/2/2009	11/21/2008	8672	EnCana	Crimson State 12-36	CT-8672	1/19/2010	2.6	0.5	0.0	0.0	0.0	0.0	2.6	0.5	3.9	0.6	NA	
10/2/2009	12/1/2008	8704	EnCana	Jonah Federal 5-6 CF	MD-8704	1/19/2010	14.2	2.9	14.2	1.5	0.0	0.0	0.0	1.4	0.0	1.5	NA	
10/2/2009	12/3/2008	8709	EnCana	Stud Horse Butte 3-34 CF	MD-8709	1/19/2010	14.3	4.2	43.5	1.4	0.0	0.0	-29.2	2.8	-29.2	3.1	NA	consolidating wells and controlling previously uncontrolled tanks and dehydration units
10/2/2009	12/10/2008	8749	EnCana	Crimson State 16-2	CT-8749	1/19/2010	3.0	0.5	0.0	0.0	0.0	0.0	3.0	0.5	4.5	0.6	NA	
10/2/2009	12/10/2008	8750	EnCana	Yellow Point 1-34 CF	CT-8750	1/19/2010	2.9	0.5	0.0	0.0	0.0	0.0	2.9	0.5	4.4	0.6	NA	
10/2/2009	12/9/2008	8744	EnCana	Cabrito 13-30 CF	MD-8744	1/19/2010	43.2	8.6	77.5	2.0	0.0	0.0	-34.3	6.6	-34.3	7.3	NA	consolidating wells and controlling previously uncontrolled tanks and dehydration units
10/2/2009	1/29/2009	8748	EnCana	Crimson Federal 16-14	CT-8748	1/19/2010	5.3	0.8	0.0	0.0	0.0	0.0	5.3	0.8	8.0	0.9	NA	
10/9/2009	2/20/2008	7348	EnCana	Stud Horse Butte 11-22 CF	MD-7348	1/13/2010	31.9	6.8	12.6	3.4	0.0	0.0	19.3	3.4	19.3	3.4	NA	
10/9/2009	12/11/2008	8760	EnCana	Stud Horse Butte 3-36 CF	MD-8760	1/13/2010	20.6	4.1	64.1	3.2	0.0	0.0	-43.5	0.9	-43.5	1.0	NA	consolidating wells and controlling previously uncontrolled tanks and dehydration units
10/9/2009	12/15/2008	8766	EnCana	Stud Horse Butte 11-34 CF	MD-8766	1/13/2010	17.8	3.7	60.5	2.3	0.0	0.0	-42.7	1.4	-42.7	1.5	NA	consolidating wells and controlling previously uncontrolled tanks and dehydration units
10/9/2009	12/11/2008	8758	EnCana	Hacienda 6-17A	CT-8758	1/13/2010	4.4	0.7	0.0	0.0	0.0	0.0	4.4	0.7	6.6	0.8	NA	
10/9/2009	12/11/2008	8759	EnCana	Stud Horse Butte 2-36 CF	MD-8759	1/13/2010	22.7	4.1	20.3	2.2	0.0	0.0	2.4	1.9	3.6	2.1	NA	

10/9/2009	12/15/2008	8767	EnCana	Stud Horse Butte 1-36 CF	MD-8767	1/13/2010	24.7	4.5	43.2	1.9	0.0	0.0	-18.5	2.6	-18.5	2.8	NA	consolidating wells and controlling previously uncontrolled dehydration units and pnuematics
10/9/2009	12/18/2008	8820	EnCana	Stud Horse Butte 8-14 CF	MD-8820	1/13/2010	19.3	3.7	16.7	0.4	0.0	0.0	2.6	3.3	3.9	3.6	NA	
10/9/2009	12/17/2008	8776	EnCana	Stud Horse Butte 12-29 CF	MD-8776	1/13/2010	23.1	4.4	92.3	1.6	0.0	0.0	-69.2	2.8	-69.2	3.1	NA	consolidating wells and controling previously uncontrolled dehydration units and pnuematics
10/9/2009	1/15/2009	8881	EnCana	Stud Horse Butte 84-9 CF	MD-8881	1/13/2010	20.1	4.0	34.8	0.8	0.0	0.0	-14.7	3.2	-14.7	3.5	NA	consolidating wells and controling previously uncontrolled dehydration units and pnuematics
10/9/2009	1/20/2009	8912	EnCana	Stud Horse Butte 1-29 CF	MD-8912	1/13/2010	23.0	4.3	213.0	4.8	0.0	0.0	-190.0	-0.5	-190.0	-0.5	NA	consolidating wells and controlling previously uncontrolled dehydration units and pnuematics
10/16/2009	1/26/2009	8923	EnCana	Crimson Federal 15-24	MD-8923	1/13/2010	4.6	0.6	0.0	0.0	0.0	0.0	4.6	0.6	6.9	0.7	NA	
10/16/2009	1/27/2009	8922	EnCana	Yellow Point 10-13 CF	MD-8922	1/13/2010	20.4	3.5	87.6	3.4	0.0	0.0	-67.2	0.1	-67.2	0.1	NA	consolidating wells and controlling previously uncontrolled dehydration units and pnuematics
10/16/2009	1/29/2009	8919	EnCana	Hacienda 6-19 CF	MD-8919	1/13/2010	5.7	1.1	17.3	0.4	0.0	0.0	-11.6	0.7	-11.6	0.8	NA	consolidating wells and controlling previously uncontrolled dehydration units and pnuematics
10/16/2009	2/18/2009	9065	EnCana	Crimson Federal 10-36	MD-9065	1/13/2010	3.9	0.6	0.0	0.0	0.0	0.0	3.9	0.6	5.9	0.7	NA	
10/16/2009	2/20/2009	9059	EnCana	Stud Horse Butte 48-22 CF	MD-9059	1/13/2010	20.7	4.2	0.0	0.0	0	0	20.7	4.2	31.1	4.6	NA	
10/16/2009	2/26/2009	9070	EnCana	Crimson Unit 2-18	MD-9070	1/13/2010	4.4	0.6	0.0	0.0	0	0	4.4	0.6	6.6	0.7	NA	
10/16/2009	3/12/2009	9149	EnCana	Stud Horse Butte 124-11 CF	MD-9149	1/13/2010	16.1	3.8	17.9	0.1	0	0	-1.8	3.7	-1.8	4.1	NA	controlling previously uncontrolled tanks and dehydration units
10/16/2009	3/24/2009	9208	EnCana	Crimson Federal 7-35	CT-9208	1/13/2010	0.8	0.5	0.0	0.0	0	0	0.8	0.5	1.2	0.6	NA	
10/16/2009	3/27/2009	9216	EnCana	Stud Horse Butte 1-34 CF	MD-9216	1/13/2010	9.9	2.3	11.4	1.6	0	0	-1.5	0.7	-1.5	0.8	NA	consolidating wells and controlling previously uncontrolled dehydration units and pnuematics
10/16/2009	4/1/2009	9253	EnCana	Stud Horse Butte 1-27 CF	MD-9253	1/13/2010	19.1	5.0	61.5	9.6	0	0	-42.4	-4.6	-42.4	-4.6	NA	consolidating wells and controlling previously uncontrolled dehydration units and pnuematics
10/23/2009	4/13/2009	9282	EnCana	Cabrito 2-31 CF	MD-9289	1/14/2010	8.6	1.9	10.7	1.0	0	0	-2.1	0.9	-2.1	1.0	NA	
10/23/2009	4/13/2009	9283	EnCana	Crimson Unit 8-31	CT-9283	1/14/2010	0.8	0.5	0.0	0.0	0	0	0.8	0.5	1.2	0.6	NA	
10/23/2009	4/27/2009	9354	EnCana	Hacienda 5-20	CT-9354	1/14/2010	2.6	0.8	0.0	0.0	0	0	2.6	0.8	3.9	0.9	NA	
10/23/2009	4/30/2009	9351	EnCana	Stud Horse Butte 16-28/9-28	MD-9351	1/14/2010	7.3	2.2	36.4	1.8	0	0	-29.1	0.4	-29.1	0.4	NA	consolidating wells and controlling previously uncontrolled dehydration units, pnuematics, and tanks
NA	5/7/2009	9386	EnCana	Stud Horse Butte 12-15 CF	MD-7782	10/26/2009	27.4	6.9	0.0	0.0	22.7	2.5	4.7	4.4	7.1	4.8	NA	
10/23/2009	5/22/2009	9455	EnCana	Stud Horse Butte 2-28 CF	MD-9455	1/14/2010	18.9	4.6	14.0	2.6	0	0	4.9	2.0	7.4	2.2	NA	
10/23/2009	5/22/2009	9456	EnCana	Stud Horse Butte 15-28 CF	MD-9456	1/14/2010	18.7	4.7	5.8	3.3	0	0	12.9	1.4	19.4	1.5	NA	
10/23/2009	5/22/2009	9451	EnCana	Hacienda 12-21	CT-9451	1/14/2010	1.7	0.7	0.0	0.0	0	0	1.7	0.7	2.6	0.8	NA	
10/23/2009	5/27/2009	9476	EnCana	Yellow Point 10-14 CF	MD-9476	1/14/2010	12.6	3.3	7.5	3.1	0	0	5.1	0.2	7.7	0.2	NA	
10/23/2009	6/2/2009	9500	EnCana	Crimson Federal 2-13	CT-9500	1/14/2010	1.4	0.6	0.0	0.0	0	0	1.4	0.6	2.1	0.7	NA	
10/23/2009	6/24/2009	9592	EnCana	Jonah Federal 2-8 X CF	MD-9592	1/14/2010	8.3	2.8	8.5	3.6	0	0	-0.2	-0.8	-0.2	-0.8	NA	Decrease due to decrease in production
10/23/2009	7/1/2009	9654	EnCana	Cabrito 8-25 CF	MD-9654	1/14/2010	13.9	3.7	16.5	4.8	0	0	-2.6	-1.1	-2.6	-1.1	NA	Decrease due to decrease in production
10/23/2009	9/3/2009	9903	EnCana	Stud Horse Butte 53-16 CF	MD-9903	1/14/2010	9.4	2.4	10.9	0.9	0	0	-1.5	1.5	-1.5	1.7	NA	Controlled Pneumatic Pumps
11/6/2009	10/10/2008	8553	EnCana	Jonah Storage Yard Engines	MD-8553	12/10/2009	0.2	0.5	0.0	0.0	0.0	0.0	0.2	0.5	0.3	0.6	NA	Addition of three engines - Volvo Penta TAAD741GE
11/6/2009	8/3/2009	9725	EnCana	Section 36 Water Management Facility	MD-9725	1/7/2010	11.9	15.2	0.0	0.0	11.9	3	0.0	12.2	0.0	13.4	NA	Modify Water Handling Faility
	10/7/2009	9983	EnCana	SOL 95-18 Water Treatment Facility	CT-9983	3/23/2010	18.2	6.6	0.0	0.0	0	0	18.2	6.6	27.3	7.3	NA	
NA	10/13/2009	10009	EnCana	Yellow Point 8-13 CF	MD-8199	11/25/2009	9.0	2.6	0.0	0.0	18.4	3.4	-9.4	-0.8	-9.4	-0.8	NA	Short Form, permitting at actual production instead of Maximum Equipment Capacity
NA	10/14/2009	10027	EnCana	Stud Horse Butte 2-34 CF	MD-7179	11/25/2009	9.6	3.4	9.4	3.0	0	0	0.2	0.4	0.3	0.4	NA	Short Form
NA	11/2/2009	10105	EnCana	Stud Horse Butte 11-17 CF	MD-8202	11/30/2009	28.1	7.3	0.0	0.0	30.5	6.2	-2.4	1.1	-2.4	1.2	NA	
12/18/2009	11/16/2009	10149	EnCana	Cabrito 61-13	CT-10149	2/5/2010	4.9	1.4	0.0	0.0	0	0	4.9	1.4	7.4	1.5	NA	
NA	11/23/2009	10159	EnCana	Jonah Federal 5-4 CF	MD-7972	12/11/2009	7.6	1.5	0.0	0.0	28.2	6.3	-20.6	-4.8	-20.6	-4.8	NA	Short Form
NA	11/25/2009	10180	EnCana	Stud Horse Butte 3-36 CF	8760	2/19/2010	6.7	1.8	0.0	0.0	20.6	4.1	-13.9	-2.3	-13.9	-2.3	NA	Short Form
NA	11/25/2009	10179	EnCana	Stud Horse Butte 12-36 CF	MD-7974	12/11/2009	10.8	3.2	0.0	0.0	28.1	6.1	-17.3	-2.9	-17.3	-2.9	NA	Short Form
NA	12/2/2009	10195	EnCana	Stud Horse Butte 2-36 CF	MD-8759	2/19/2010	11.9	3.1	0.0	0.0	22.7	4.1	-10.8	-1.0	-10.8	-1.0	NA	Short Form
1/8/2010	12/3/2009	10192	EnCana	Stud Horse Butte 7-22 CF	MD-10192	5/28/2010	8.9	2.8	4.5	1.5	0	0	4.4	1.3	6.6	1.4	NA	
1/19/2010	12/10/2009	10216	EnCana	Stud Horse Butte 4-33 CF	MD-10261	2/23/2010	3.3	1.4	9.1	0.7	0	0	-5.8	0.7	-5.8	0.8	NA	
NA	12/16/2009	10251	EnCana	Stud Horse Butte 11-36 CF	MD-8441	1/4/2010	11.6	3.5	0.0	0.0	18.5	4.1	-6.9	-0.6	-6.9	-0.6	NA	Short Form
1/19/2010	12/23/2009	10261	EnCana	Jonah Federal 3-5 CF	MD-10261	2/23/2010	3.3	1.2	9.1	0.8	0	0	-5.8	0.4	-8.7	0.4	NA	
NA	1/28/2010	10349	EnCana	Stud Horse Butte 4-27 CF	MD-8104	2/25/2010	5.6	1.8	0.0	0.0	22.6	4.5	-17.0	-2.7	-17.0	-2.7	NA	Short Form
NA	2/4/2010	10384	EnCana	Stud Horse Butte 11-22 CF	MD-7348	2/25/2010	12.3	3.2	0.0	0.0	31.9	6.8	-19.6	-3.6	-19.6	-3.6	NA	Short Form
	1/21/2010	10324	EnCana	Temporaty Oil Storage Tanks	wv-10324	2/23/2010	4.8	0.0	0.0	0.0	0	0	4.8	0.0	7.2	0.0	NA	
NA	2/18/2010	10423	EnCana	Jonah Federal 4-18 CF	MD-10423	5/12/2010	10.8	1.3	19.5	0.5	0	0	-8.7	0.8	-8.7	0.9	NA	
NA	2/24/2010	10430	EnCana	Section 32 Methanol Tank	wv-10430	3/17/2010	0.5	0.0	0.0	0.0	0.3	0	0.2	0.0	0.3	0.0	NA	Adding 2 methanol tanks, 3 TEG tanks and 2 PG tanks
NA	2/24/2010	10431	EnCana	Jonah Federal 2-8 X CF	MD-9592	3/15/2010	19.3	3.0	0.0	0.0	8.3	2.8	11.0	0.2	11.0	0.2	NA	
NA	3/10/2010	10501	EnCana	Stud Horse Butte 07-36	MD-8467	2/23/2010	9.9	1.7	0.0	0.0	15.7	2.9	-5.8	-1.2	-5.8	-1.2	NA	Short Form
4/30/2010	3/17/2010	10517	EnCana	Jonah Federal 01-04X CF	MD-10517	6/2/2010	9.6	1.6	41.8	1.9	0	0	-32.2	-0.3	-32.2	-0.3	NA	consolidation- Flash emissions and pneumatic pumps now controlled
NA	3/18/2010	10482	EnCana	Stud Horse Butte 122-10WW	wv-10482	3/18/2010	0.3	0.3	0.0	0.0	0	0	0.3	0.3	0.4	0.3	NA	
NA	4/8/2010	10552	EnCana	Stud Horse Butte 03-27 CF	MD-7696	4/16/2010	25.2	2.9	0.0	0.0	24.9	4.8	0.3	-1.9	0.5	-1.9	NA	Short Form
NA	4/15/2010	10589	EnCana	Stud Horse Butte 84-9 CF	MD-8881	4/22/2010	24.5	4.7	0.0	0.0	20.1	4	4.4	0.7	6.6	0.8	NA	Short Form
NA	4/20/2010	10632	EnCana	Stud Horse Butte 4-36WW	wv-10632	5/12/2010	0.4	0.3	0.0	0.0	0	0	0.4	0.3	0.6	0.3	NA	
6/11/2010	5/11/2010	10700	Encana	Tot Federal #1	MD-10700	7/16/2010	6.1	0.9	6.1	0.5	0	0	0.0	0.4	0.0	0.4	NA	
NA	5/13/2010	10699	Encana	SAG 34-19	CT-7519	5/27/2010	11.3	2.2	0.0	0.0	12.8	0.9	-1.5	1.3	-1.5	1.3	NA	Short Form
NA	5/19/2010	10723	Encana	Stud Horse Butte 07-15	MD-7692	5/27/2010	18.5	4.1	0.0	0.0	18.3	3.8	0.2	0.3	0.3	0.2	NA	
	6/1/2010	10789	Encana	Section 36 Water Management Facility			10.9	25.3	0.0	0.0	11.9	15.2	-1.0	10.1	-1.5	11.1	NA	Modify Water Management Facility
6/25/2010	6/9/2010	10806	Encana	Stud Horse Butte 1-32 CF	MD-10806	7/29/2010	12.3	2.5	29.4	4.3	0	0	-17.1	-1.8	-17.1	-1.8	NA	Short Form
7/30/2010	7/12/2010	10925	Encana	Cabrito 13-19 CF	MD-10925	9/3/2010	24.0	3.6	52.5	2.5	0	0	-28.5	1.1	-28.5	1.2	NA	Consolidation
	7/21/2010		Encana	Stud Horse Butte 53-16 CF	MD-9903	8/9/2010	23.9	4.4	0.0	0.0	9.4	2.4	14.5	2.0	21.8	2.2	NA	
NA	8/3/2010	11016	Encana	Stud Horse Butte 1-29 CF	MD-8912	8/16/2010	22.6	5.1	0.0	0.0	23	4.3	-0.4	0.8	-0.4	0.8	NA	Short Form
	8/3/2010	11017	Encana	SOL 95-18 Water Treatment Facility	CT-9983		17.2	5.6	0.0	0.0	18.2	6.6	-1.0	-1.0	-1.0	-1.0	NA	Replaced 3406 engines with a 3412TA from Section 36
NA	8/4/2010	11014	Encana	Stud Horse Butte 13-26 CF	MD-8200	8/11/2010	27.3	3.8	0.0	0.0	31.8	7.6	-4.5	-3.8	-4.5	-3.8	NA	
8/27/2010	8/5/2010	11015	Encana	Stud Horse Butte 4-28 CF	MD-11015	9/28/2010	13.6	4.0	21.9	0.5	0	0	-8.3	3.5	-8.3	3.9	NA	
NA	8/10/2010	11048	Encana	Stud Horse Butte 11-26 CF	MD-8110	8/20/2010	18.9	3.0	0.0	0.0	35.1	8.8	-16.2	-5.8	-16.2	-5.8	NA	
NA	3/11/2010	11034	EnCana	Section 32 Storage Yard (Previously Section 32 Methanol Tank Storage Facilty)			0.7	0.5	0.0	0.0	0.5	0	0.2	0.5	0.3	0.6	NA	Adding generator engine
NA	8/26/2010	11082	Encana	Stud Horse Butte 48-16	CT-7162	9/29/2010	6.5	0.8	0.0	0.0	11	0.6	-4.5	0.2	-4.5	0.2	NA	
11/19/2010	9/9/2010	11150	Encana	Stud Horse Butte 15-27	MD-11150	12/22/2010	18.0	2.6	16.7	2.4	0	0	1.3	0.2	2.0	0.2	NA	
NA	9/9/2010	11149	Encana	Stud Horse Butte 1-34 CF	MD-9216		9.4	1.5	0.0	0.0	9.9	2.3	-0.5	-0.8	-0.5	-0.8	NA	Short Form
NA	9/20/2010	11161	Encana	Stud Horse Butte 11-20 CF	MD-8490	10/28/2010	28.5	5.1	0.0	0.0	51.3	8.9	-22.8	-3.8	-22.8	-3.8	NA	Short Form
NA	9/29/2010	11205	Encana	Stud Horse Butte 12-29 CF	MD-8776	11/5/2010	19.4	3.4	0.0	0.0	23.1	4.4	-3.7	-1.0	-3.7	-1.0	NA	Short Form
1/4/2011	10/12/2010	11250	Encana	Stud Horse Butte 11-17 CF	MD-11250	2/8/2011	17.6	5.8	0.0	0.0	30.5	6.2	-12.9	-0.4	-12.9	-0.4	NA	Short Form
NA	10/13/2010	11248	Encana	Stud Horse Butte 2-33 CF	MD-11248	12/28/2010	7.9	1.7	13.5	1.9	0	0	-5.6	-0.2	-5.6	-0.2	NA	Short Form
NA	10/14/2010	11249	Encana	Stud Horse Butte 10-33 CF	MD-11249	12/29/2010	8.0	1.8	13.9	0.6	18.1	4.4	-24.0	-3.2	-24.0	-3.2	NA	Short Form
1/4/2011	10/19/2010	11276	Encana	Cabrito 8-25 CF	MD-11276	2/8/2011	16.9	5.1	0.0	0.0	13.9	3.7	3.0	1.4	4.5	1.5	NA	Short Form
1/4/2011	10/25/2010	11289	Encana	Stud Horse Butte 16-18 CF	MD-11289	2/8/2011	3.8	1.4	0.0	0.0	9.4	2.6	-5.6	-1.2	-5.6	-1.2	NA	
1/7/2011	11/12/2010	11399	EnCana	Stud Horse Butte 10-35 CF	MD-11399	2/8/2011	20.5	2.9	97.8	9.1	0	0	-77.3	-6.2	-77.3	-6.2	NA	Consolidation
1/10/2011	11/12/2010	11400	EnCana	Cabrito 14-25 CF	MD-11400	3/4/2011	14.3	3.6	115.3	10.4	0.0	0.0	-101.0	-6.8	-101.0	-6.8	NA	Consolidation
1/10/2011	11/15/2010	11428	EnCana	Stud Horse Butte 01-35 CF	MD-11428	3/4/2011	16.6	3.1	82.7	7.0	0.0	0.0	-66.1	-3.9	-66.1	-3.9	NA	Consolidation

2/14/2011	11/16/2010	11435	Encana	Cabrito 13-30 CF	MD-11435	3/22/2011	23.6	4.1	0.0	0.0	43.2	8.6	-19.6	-4.5	-19.6	-4.5	NA	Short Form
1/31/2011	11/24/2010	11424	Encana	Stud Horse Butte 8-14 CF	MD-11424	3/9/2011	9.0	3.0	0.0	0.0	19.3	3.7	-10.3	-0.7	-10.3	-0.7	NA	2010 Short Form
1/31/2011	11/22/2010	11426	Encana	Stud Horse Butte 122-10 CF	MD-11426	3/9/2011	12.9	4.1	0.0	0.0	18.2	3.7	-5.3	0.4	-8.0	0.4	NA	Short Form
1/14/2011	12/7/2010	11469	Encana	SAG 73-20 CF	CT-11469	2/25/2011	4.1	1.2	0.0	0.0	0.0	0.0	4.1	1.2	6.2	1.3	NA	2010 Full Application (new facility)
1/14/2011	12/8/2010	11467	Encana	SAG 17-30 CF	CT-11467	2/25/2011	7.2	2.1	0.0	0.0	0.0	0.0	7.2	2.1	10.8	2.3	NA	2010 Full Application (new facility)
1/24/2011	12/13/2010	11488	Encana	Stud Horse Butte 16-34B CF	MD-11488	3/1/2011	9.0	2.4	0.0	0.0	19.4	4.0	-10.4	-1.6	-10.4	-1.6	NA	2010 Short Form
1/31/2011	12/14/2010	11516	Encana	Stud Horse Butte 2-34 CF	MD-111516	3/9/2011	15.0	4.2	0.0	0.0	9.6	3.4	5.4	0.8	8.1	0.9	NA	2010 Short Form
4/4/2011	1/13/2010	11623	Encana	Stud Horse Butte 15-19 CF	MD-11623	5/10/2011	9.3	2.1	0.0	0.0	11.0	2.6	-1.7	-0.5	-1.7	-0.5	NA	2010 Short Form
4/4/2011	1/13/2011	11622	Encana	Stud Horse Butte 7-26 CF	MD-11622	5/10/2011	15.3	4.6	0.0	0.0	38.1	8.6	-22.8	-4.0	-22.8	-4.0	NA	2010 Short Form
3/28/2011	1/14/2011	11614	Encana	Corona-Stud Horse Butte 10-30 CF	AP-11614		12.3	3.2	0.0	0.0	27.3	8.3	-15.0	-5.1	-15.0	-5.1	NA	2010 Short Form
4/11/2011	1/20/2011	11659	Encana	Stud Horse Butte 4-28 CF	MD-11659	5/18/2011	8.4	2.9	43.2	4.5	0.0	0.0	-34.8	-1.1	-34.8	-1.1	NA	2010 Short Form
4/18/2011	1/24/2011	11658	Encana	Corona - Stud Horse Butte 10-31 CF	MD-11658	5/24/2011	11.7	3.5	0.0	0.0	33.5	7.1	-21.8	-3.6	-21.8	-3.6	NA	2010 Short Form
4/11/2011	1/25/2011	11660	Encana	Stud Horse Butte 4-35 CF	MD-11660	5/18/2011	10.0	2.1	22.3	1.8	0.0	0.0	-12.3	0.3	-12.3	0.3	NA	2010 Full Application
11/11/2011	2/15/2010	11772	Encana	Section 36 WMF			36.6	29.5	0.0	0.0	15.4	24.8	21.2	4.7	31.8	5.2	NA	
4/18/2011	3/1/2011	11801	Encana	Jonah Federal 5-6 CF	MD-11801	5/24/2011	8.0	2.0	0.0	0.0	14.2	2.9	-6.2	-0.9	-6.2	-0.9	NA	
5/9/2011	3/9/2011	11825	Encana	Jonah Federal 45-08 H	CT-11825	6/14/2011	5.1	1.5	0.0	0.0	0.0	0.0	5.1	1.5	7.7	1.7	NA	
5/9/2011	3/11/2011	11845	Encana	Jonah Federal 13-7	MD-11845	6/14/2011	5.6	1.2	5.9	1.2	0.0	0.0	-0.3	0.0	-0.3	0.0	NA	
5/16/2011	3/29/2011	11896	Encana	Stud Horse Butte 32-10	MD-11896	6/21/2011	4.5	1.2	0.0	0.0	5.1	1.0	-0.6	0.2	-0.6	0.2	NA	
5/16/2011	4/5/2011	11934	Encana	Stud Horse Butte 15-28 CF	MD-11934	6/21/2011	9.5	2.8	0.0	0.0	18.7	4.7	-9.2	-1.9	-9.2	-1.9	NA	
5/16/2011	4/13/2011	11950	Encana	Stud Horse Butte 12-15 CF	MD-11950	6/21/2011	16.4	4.2	0.0	0.0	27.4	6.9	-11.0	-2.7	-11.0	-2.7	NA	
7/18/2011	5/16/2011	12065	Encana	SAG 34-19	MD-12065	8/24/2011	9.9	3.4	0.0	0.0	11.3	2.2	-1.4	1.2	-1.4	1.3	NA	2010 Short Form
8/22/2011	5/23/2011	12087	Encana	Stud Horse Butte 84-09 CF	MD-12087	9/28/2011	18.6	5.9	0.0	0.0	24.5	4.7	-5.9	1.2	-5.9	1.3	NA	2010 Short Form
7/18/2011	5/27/2011	12080	EnCana	Yellow Point 04-12 CF	MD-12080	8/24/2011	8.9	2.3	0.0	0.0	31.9	4.4	-23.0	-2.1	-23.0	-2.1	NA	2010 Short Form
7/25/2011	6/2/2011	12103	EnCana	Stud Horse Butte 01-27 CF	MD-12103	8/30/2011	10.5	2.9	0.0	0.0	19.1	5.0	-8.6	-2.1	-8.6	-2.1	NA	2010 Short Form
7/18/2011	6/2/2011	12102	EnCana	Stud Horse Butte 03-34 CF	MD-12102	8/24/2011	9.8	2.6	0.0	0.0	14.3	4.2	-4.5	-1.6	-4.5	-1.6	NA	2010 Short Form
8/15/2011	6/8/2011	12147	EnCana	Stud Horse Butte 04-26 CF	MD-12147	9/20/2011	12.5	3.8	0.0	0.0	27.5	8.9	-15.0	-5.1	-15.0	-5.1	NA	2010 Short Form
8/15/2011	6/8/2011	12148	EnCana	Stud Horse Butte 07-22 CF	MD-12148	9/20/2011	16.0	4.9	0.0	0.0	8.9	2.8	7.1	2.1	10.7	2.3	NA	2010 Short Form
8/15/2011	6/14/2011	12143	EnCana	SAG 59-29	MD-12143	9/20/2011	5.7	1.5	0.0	0.0	0.0	0.0	5.7	1.5	8.6	1.7	NA	2010 Full Application
8/15/2011	6/16/2011	12166	EnCana	Stud Horse Butte 04-33 CF	MD-12166	9/20/2011	7.7	2.5	0.0	0.0	3.3	1.4	4.4	1.1	6.6	1.2	NA	2010 Short Form
8/15/2011	6/30/2011	12217	EnCana	Stud Horse Butte 53-16 CF	MD-12217	9/20/2011	14.5	4.7	0.0	0.0	23.9	4.4	-9.4	0.3	-9.4	0.3	NA	2010 Short Form
8/15/2011	6/30/2011	12216	EnCana	Cabrito 14-25 CF	MD-12216	9/20/2011	12.2	3.0	0.0	0.0	14.3	3.6	-2.1	-0.6	-2.1	-0.6	NA	2010 Short Form
9/6/2011	7/8/2011	12241	EnCana	Yellow Point 07-02 CF	MD-12241	10/11/2011	4.4	1.3	4.9	1.4	0.0	0.0	-0.5	-0.1	-0.5	-0.1	NA	2010 Short Form
	7/11/2011		EnCana	Hacienda 14-30			6.4	2.7	9.8	1.1	0.0	0.0	-3.4	1.6	-3.4	1.8	NA	
8/25/2011	7/14/2011	12233	EnCana	Stud Horse Butte 11-26 CF	MD-12233	10/4/2011	7.4	2.8	0.0	0.0	18.9	3.0	-11.5	-0.2	-11.5	-0.2	NA	2010 Short Form
9/26/2011	8/3/2011	12305	EnCana	Stud Horse Butte 16-28/9-28 CF	MD-12305	11/1/2011	7.6	2.5	0.0	0.0	7.3	2.2	0.3	0.3	0.5	0.3	NA	2010 Short Form
10/24/2011	8/4/2011	12298	EnCana	Stud Horse Butte 03-27 CF	MD-12298	11/29/2011	14.0	3.3	0.0	0.0	25.2	2.9	-11.2	0.4	-11.2	0.4	NA	2010 Short Form
10/3/2011	8/8/2011	12339	EnCana	Stud Horse Butte 01-35 CF	MD-12339	11/8/2011	11.6	3.5	0.0	0.0	16.6	3.1	-5.0	0.4	-5.0	0.4	NA	2010 Short Form
10/31/2011	9/1/2011	12432	EnCana	Stud Horse Butte 09-33	MD-12432	12/6/2011	7.4	2.8	18.9	3.0	0.0	0.0	-11.5	-0.2	-11.5	-0.2	NA	2010 Short Form
10/31/2011	9/15/2011	12449	EnCana	Stud Horse Butte 11-34 CF	MD-12449	12/6/2011	9.7	2.8	0.0	0.0	17.8	3.7	-8.1	-0.9	-8.1	-0.9	NA	2010 Short Form
11/14/2011	9/27/2011	12486	EnCana	Stud Horse Butte 02-28/18-28 CF	MD-12486	12/20/2011	12.3	4.2	0.0	0.0	18.9	4.6	-6.6	-0.4	-6.6	-0.4	NA	2010 Short Form
11/14/2011	9/30/2011	12536	EnCana	Jonah Federal 24-09 Single Well Facility	MD-12536	12/20/2011	5.0	1.4	0.0	0.0	0.0	0.0	5.0	1.4	7.5	1.5	NA	2010 Full Application
11/21/2011	10/6/2011	AP-12604	EnCana	Stud Horse Butte 01-36/19-36 CF	MD-12604	12/28/2011	11.3	3.4	0.0	0.0	24.7	4.5	-13.4	-1.1	-13.4	-1.1	NA	2010 Short Form
11/21/2011	10/10/2011	AP-12614	EnCana	Stud Horse Butte 01-34 CF	MD-12614	12/28/2011	6.3	1.8	0.0	0.0	9.4	1.5	-3.1	0.3	-3.1	0.3	NA	2010 Short Form
	10/14/2011		EnCana	Section 18 Water Management Facility			22.1	10.5	0.0	0.0	16.9	5.3	5.2	5.2	7.8	5.7	NA	Facility Application
12/5/2011	11/9/2011	AP-12697	EnCana	Stud Horse Butte 12-36 CF	MD-12697	1/10/2012	11.6	3.5	0.0	0.0	10.8	3.2	0.8	0.3	1.2	0.3	NA	2010 Short Form
12/23/2011	11/14/2011	AP-12705	EnCana	Stud Horse Butte 06-35 CF	MD-12705	1/31/2012	10.0	2.8	25.7	2.5	0.0	0.0	-15.7	0.3	-15.7	0.3	NA	2010 Short Form
1/9/2012	12/13/2011	AP-12859	EnCana	Stud Horse Butte 67-11 CF	CT-12859	2/14/2012	7.3	1.9	0.0	0.0	0.0	0.0	7.3	1.9	11.0	2.1	NA	2010 Full Application
1/23/2012	12/20/2011	AP-12876	EnCana	Stud Horse Butte 72-09 CF			16.7	5.7	0.0	0.0	0.0	0.0	16.7	5.7	25.1	6.3	NA	2010 Full Application
1/30/2012	1/10/2012	AP-12911	EnCana	Stud Horse Butte 16-32 CF			4.9	1.6	17.1	2.1	0.0	0.0	-12.2	-0.5	-12.2	-0.5	NA	2010 Full Application
1/30/2012	1/11/2012	AP-12919	EnCana	Stud Horse Butte 04-27 CF			5.0	1.5	0.0	0.0	5.6	1.8	-0.6	-0.3	-0.6	-0.3	NA	2010 Short Form
2/6/2012	1/19/2012	AP-12948	EnCana	Jonah Federal 08-07 CF	MD-12948	3/19/2012	7.4	2.5	24.3	2.7	0.0	0.0	-16.9	-0.2	-16.9	-0.2	NA	2010 Full Application
4/9/2012	3/1/2012	AP-13186	EnCana	Stud Horse Butte 41-11 Single Well Facility	MD-13186	5/15/2012	3.8	1.3	0.0	0.0	0.0	0.0	3.8	1.3	5.7	1.4	NA	2010 Full Application
6/18/2012	3/7/2012	AP-13195	EnCana	Stud Horse Butte 12-36/29-35 CF	MD-13195	7/24/2012	11.1	2.9	0.0	0.0	11.6	3.5	-0.5	-0.6	-0.5	-0.6	NA	2010 Short Form
6/18/2012	3/8/2012	AP-13194	EnCana	Jonah Federal 05-04 CF	MD-13194	7/24/2012	8.3	2.7	0.0	0.0	7.6	1.5	0.7	1.2	1.1	1.4	NA	2010 Short Form
	3/14/2012		EnCana	Portable Water Pump Generator			0.5	0.5	0.0	0.0	0.0	0.0	0.5	0.5	0.8	0.6	NA	Full Application
	3/15/2012		EnCana	SHB 2-36			0.3	0.3	0.0	0.0	0.0	0.0	0.3	0.3	0.5	0.3	NA	Full Application
	3/15/2012		EnCana	CAB 14-25			0.3	0.2	0.0	0.0	0.0	0.0	0.3	0.2	0.5	0.2	NA	Full Application
	3/19/2012		EnCana	SHB 15-27			0.3	0.3	0.0	0.0	0.0	0.0	0.3	0.3	0.5	0.3	NA	Full Application
6/18/2012	5/11/2012	AP-13400	EnCana	Cabrito 02-31 CF	MD-13400	7/24/2012	7.1	2.1	0.0	0.0	8.6	1.9	-1.5	0.2	-1.5	0.3	NA	2010 Short Form
6/18/2012	5/14/2012	AP-13455	EnCana	Stud Horse Butte 12-15 CF	MD-13455	7/24/2012	9.7	3.3	0.0	0.0	16.4	4.2	-6.7	-0.9	-6.7	-0.9	NA	2010 Short Form
8/6/2012	6/18/2012	AP-13565	EnCana	Stud Horse Butte 06-32 CF	MD-13565	9/17/2012	9.7	3.3	60.2	6.9	0.0	0.0	-50.5	-3.6	-50.5	-3.6	NA	2010 Full Application
7/30/2012	6/22/2012	AP-13564	EnCana	Stud Horse Butte 14-33 CF	MD-13564	9/5/2012	4.5	1.6	23.9	2.4	0.0	0.0	-19.4	-0.8	-19.4	-0.8	NA	2010 Full Application
8/20/2012	7/3/2012	AP-13619	EnCana	Stud Horse Butte 07-15 CF	MD-13619	2/28/2013	13.1	5.1	0.0	0.0	18.5	4.1	-5.4	1.0	-5.4	1.2	NA	2010 Short Form
8/20/2012	7/10/2012	AP-13639	EnCana	Stud Horse Butte 11-34 CF	MD-13639	2/28/2013	9.6	2.9	0.0	0.0	9.7	2.8	-0.1	0.1	-0.1	0.1	NA	2010 Short Form
8/20/2012	7/13/2012	AP-13635	EnCana	Stud Horse Butte 02-34 CF	MD-13635	2/28/2013	8.2	2.9	0.0	0.0	15.0	4.2	-6.8	-1.3	-6.8	-1.3	NA	2010 Short Form
1/14/2013	7/31/2012	AP-13716	EnCana	Cabrito 72-29 CF			41.6	14.2	0.0	0.0	5.6	1.5	36.0	12.7	54.0	14.0	NA	2010 Full Application
9/17/2012	8/16/2012	AP-13776	EnCana	Cabrito 61-13 CF	MD-13776	10/30/2012	10.7	2.4	0.0	0.0	4.9	1.4	5.8	1.0	8.7	1.1	NA	2010 Short Form
10/8/2012	8/22/2012	AP-13795	EnCana	Stud Horse Butte 13-26 CF	MD-13795	11/14/2012	15.8	4.4	0.0	0.0	27.3	3.8	-11.5	0.6	-11.5	0.7	NA	2010 Short Form
12/3/2012	9/18/2012	AP-13923	EnCana	Stud Horse Butte 10-33 CF	MD-13923	1/8/2013	8.1	2.4	0.0	0.0	8.0	1.4	0.1	1.0	0.1	1.1	NA	2010 Short Form
11/16/2012	9/28/2012	AP-13961	EnCana	Portable Rod Pump Engines			1.0	3.0	0.0	0.0	0.0	0.0	1.0	3.0	1.5	3.3	NA	Full Permit Application
1/18/2013	10/15/2012	AP-14002	EnCana	CAB 61-13 Flow Back Cooler			0.5	0.3	0.0	0.0	0.0	0.0	0.5	0.3	0.8	0.3	NA	Full Permit Application
12/20/2012	10/26/2012	AP-14051	EnCana	Stud Horse Butte 122-10 CF	MD-14051	2/4/2013	9.5	4.6	0.0	0.0	13.1	4.1	-3.6	0.5	-3.6	0.6	NA	2010 Short Form
1/18/2013	11/9/2012	AP-14133	EnCana	Stud Horse Butte 53-16 CF	MD-14133	2/26/2013	13.7	4.3	0.0	0.0	14.5	4.6	-0.8	-0.3	-0.8	-0.3	NA	2010 Short Form
12/28/2012	11/9/2012	AP-14115	EnCana	Jonah Ridge Tower			0.0	0.2	0.0	0.0	0.0	0.0	0.0	0.2	0.0	0.2	NA	Full Permit Application
	11/12/2012		EnCana	CAB 72-29 VRU			0.5	1.4	0.0	0.0	0.0	0.0	0.5	1.4	0.8	1.5	NA	Full Permit Application
3/25/2013	1/3/2013	AP-14305	EnCana	Stud Horse Butte 02-36 CF	MD-14305	4/30/2013	11.7	3.4	0.0	0.0	12.2	3.3	-0.5	0.1	-0.5	0.1	NA	2010 Short Form
4/29/2013	2/8/2013	AP-14485	EnCana	Stud Horse Butte 11-17 CF	MD-14485	6/4/2013	14.9	5.5	0.0	0.0	17.6	5.8	-2.7	-0.3	-2.7	-0.3	NA	2010 Short Form
	3/26/2013		EnCana	Jonah and NPL Portable Engine			1.4	1.0	0.0	0.0	0.0	0.0	1.4	1.0	2.1	1.1	NA	Full Permit Application
6/17/2013	3/28/2013	AP-14673	Encana	Stud Horse Butte 07-26 CF	MD-14673	7/23/2013	11.4	3.7	0.0	0.0	15.3	4.6	-3.9	-0.9	-3.9	-0.9	NA	2010 Short Form
7/16/2013	4/18/2013	AP-14815	Encana	Stud Horse Butte 04-26 CF	MD-14815	8/20/2013	13.2	4.0	0.0	0.0	12.5	3.7	0.7	0.3	1.1	0.3	NA	2010 Short Form
7/16/2013	4/22/2013	AP-14911	Encana	Stud Horse Butte 16-33 CF	MD-14911	8/20/2013	6.2	1.9	9.4	2.3	0.0	0.0	-3.2	-0.4	-3.2	-0.4	NA	Full Permit Application
7/22/2013	5/6/2013	AP-14920	Encana	Stud Horse Butte 67-11 CF	MD-14920	8/27/2013	13.1	5.1	0.0	0.0	7.3	1.9	5.8	3.2	8.7	3.5	NA	2010 Short Form
7/22/2013	5/6/2013	AP-14921	Encana	Stud Horse Butte 11-26 CF	MD-14921	8/27/2013	10.6	3.1	0.0	0.0	7.4	2.8	3.2	0.3	4.9	0.3	NA	2010 Short Form
8/5/2013	6/3/2013	AP-15086	Encana	Stud Horse Butte 10-35 CF	MD-15086	9/10/2013	9.9	2.6	0.0	0.0	20.5	2.9	-10.6	-0.3	-10.6	-0.3	NA	2010 Short Form
8/5/2013	6/6/2013	AP-15085	Encana	Stud Horse Butte 01-35 CF	MD-15085	9/10/2013	11.0	3.3	0.0	0.0	11.6	3.5	-0.6	-0.2	-0.6	-0.2	NA	2010 Short Form
	6/18/2013		Encana	Jonah and NPL Portable Cooler Engines			3.7	2.6	0.0	0.0	0.0	0.0	3.7	2.6	5.5	2.9	NA	Full Permit Application
10/7/2013	7/1/2013	AP-15229	Encana	Stud Horse Butte 06-32 CF	MD-15229	11/13/2013	19.7	5.3	21.0	5.0	20.7	6.7	-22.0	-6.4	-22.0	-6.4	NA	2010 Short Form
10/7/2013	7/3/2013	AP-15215	Encana	Stud Horse Butte 10-33 CF	MD-15215	11/13/2013	16.4	4.8	0.0	0.0	8.1	2.4	8.3	2.4	12.5	2.6	NA	2010 Short Form

10/28/2013	7/16/2013	AP-15280	Encana	SAG 05-28 CF	MD-15280	12/10/2013	4.2	2.1	12.0	0.4	0.0	0.0	-7.8	1.7	-7.8	1.8	NA	Full Permit Application
10/28/2013	7/16/2013	AP-15281	Encana	Stud Horse Butte 04-33 CF	MD-15281	12/10/2013	7.0	3.0			8.2	3.8	-1.2	-0.8	-1.2	-0.8	NA	2010 short Form
10/28/2013	7/18/2013	AP-15282	Encana	Cabrito 13-30 CF	MD-15282	12/10/2013	18.1	6.5	0.0	0.0	32.8	8.0	-14.7	-1.5	-14.7	-1.5	NA	2010 Short Form
10/28/2013	8/1/2013	AP-15335	Encana	Stud Horse Butte 03-36 CF	MD-15335	12/10/2013	6.3	2.1	0.0	0.0	4.2	1.8	2.1	0.3	2.1	0.3	NA	2010 Short Form
10/28/2013	8/7/2013	AP-15369	Encana	Stud Horse Butte 06-35 CF	MD-15369	12/10/2013	10.9	4.1	0.0	0.0	6.6	2.8	4.3	1.3	6.5	1.4	NA	2010 Short Form
5/2/2014	8/13/2013	AP-15410	Encana	Cabrito 72-29 CF	MD-15410	6/3/2014	21.4	8.9	0.0	0.0	41.6	14.2	-20.2	-5.3	-20.2	-5.3	NA	2010 Short Form
11/4/2013	8/14/2013	AP-15393	Encana	Stud Horse Butte 02-33 CF	MD-15393	12/11/2013	3.4	1.7	0.0	0.0	6.8	1.4	-3.4	0.3	-3.4	0.3	NA	2010 Short Form
11/4/2013	8/20/2013	AP-15415	Encana	Stud Horse Butte 07-16 CF	MD-15415	12/11/2013	8.0	3.6	0.0	0.0	12.7	5.5	-4.7	-1.9	-4.7	-1.9	NA	2010 Short Form
11/4/2013	8/22/2013	AP-15411	Encana	Stud Horse Butte 15-27 CF	MD-15411	12/11/2013	16.9	4.8	0.0	0.0	15.7	2.8	1.2	2.0	1.8	2.2	NA	2010 Short Form
	9/13/2013		Encana	Section 32 Inventory Yard			1.9	1.3	0.0	0.0	0.0	0.0	1.9	1.3	2.9	1.4	NA	Full Application
12/2/2013	10/2/2013	AP-15548	Encana	Yellow Point 117-12V Single Well Facility			6.5	2.3	0.0	0.0	0.0	0.0	6.5	2.3	9.8	2.6	NA	Full Application
1/13/2014	11/11/2013	AP-15689	Encana	Stud Horse Butte 04-27 CF			15.7	6.3	0.0	0.0	21.9	7.7	-6.2	-1.4	-6.2	-1.4	NA	2010 Short Form
1/13/2014	11/19/2013	AP-15708	EnCana	Stud Horse Butte 13-26 CF			8.6	3.4	0.0	0.0	14.1	4.4	-5.5	-1.0	-5.5	-1.0	NA	2010 Short Form
2/14/2014	12/17/2013	AP-15863	EnCana	Cabrito 08-25 CF	MD-15863	3/25/2014	12.3	3.7	0.0	0.0	14.3	5.1	-2.0	-1.4	-2.0	-1.4	NA	2010 Short Form
2/14/2014	12/19/2013	AP-15862	EnCana	SAG 34-19 CF	MD-15862	3/25/2014	7.4	3.5	0.0	0.0	7.3	3.4	0.1	0.1	0.2	0.1	NA	2010 Short Form
3/28/2014	1/30/2014	AP-15987	EnCana	Cabrito 61-13 CF			13.6	4.4	0.0	0.0	8.7	2.7	4.9	1.7	7.4	1.9	NA	2010 Short Form
4/18/2014	2/28/2014	AP-16093	EnCana	Stud Horse Butte 08-14 CF			8.8	3.6	0.0	0.0	7.4	3.0	1.4	0.6	2.1	0.7	NA	2010 Short Form
4/18/2014	3/4/2014	AP-16085	Encana	Stud Horse Butte 10-28 CF			10.9	4.1	0.0	0.0	37.6	9.9	-26.7	-5.8	-26.7	-5.8	NA	2010 Short Form
5/2/2014	3/17/2014	AP-16161	Encana	Stud Horse Butte 07-26 CF	MD-16161	6/3/2014	11.0	4.4	0.0	0.0	10.5	3.7	0.5	0.7	0.8	0.8	NA	2010 Short Form
5/16/2014	4/10/2014	AP-16227	Encana	Antelope 91-29H			7.9	3.3	0.0	0.0	0.0	0.0	7.9	3.3	11.9	3.6	NA	Full Application
5/23/2014	4/11/2014	AP-16228	Encana	Stud Horse Butte 4-28CF			7.0	3.2	0.0	0.0	6.8	2.9	0.2	0.3	0.3	0.3	NA	2010 Short Form
				Jonah Field EDI& M Program	MD-13171		535.8	0.0	134.8	0.0	0.0	0.0	401.0	0.0	-401.0	0.0	NA	
6/13/2014	5/9/2014	AP-16363	Encana	Stud Horse Butte 16-26 CF	MD-16363	7/15/2014	6.3	2.3	0.0	0.0	11.5	2.9	-5.2	-0.6	-5.2	-0.6	NA	2010 Short Form
6/13/2014	5/9/2014	AP-16361	Encana	Cabrito 13-19 CF			13.9	3.7	0.0	0.0	21.5	3.6	-7.6	0.1	-7.6	0.1	NA	2010 Short Form
	5/21/2014	AP-16435	Jonah Energy	Stud Horse Butte 08-14 CF	MD-16435 (corrected)	10/27/2014	9.1	3.7	0.0	0.0	8.8	3.6	0.3	0.1	0.4	0.2	NA	2010 Short Form
	5/22/2014	AP-16502	Jonah Energy	Jonah Office Building	MD-16502	9/5/2014	0.0	1.6	0.0	0.0	0.1	0.2	-0.1	1.4	-0.1	1.5	NA	Full Application - Engine Only
	5/27/2014	AP-16510	Jonah Energy	CAB 72-29 VRU Engine	MD-16510	9/12/2014	0.7	0.5	0.0	0.0	0.0	0.0	0.7	0.5	1.1	0.6	NA	Full Application - Engine Only
	6/3/2014	AP-16563	Jonah Energy	Stud Horse Butte 122-10 CF	MD-16563	10/21/2014	5.7	3.2	0.0	0.0	6.0	4.6	-0.3	-1.4	-0.3	-1.4	NA	Pinedale AQD Short Form
	6/9/2014	AP-16612	Jonah Energy	Stud Horse Butte 32-10	MD-16612	10/21/2014	5.1	1.7	0.0	0.0	4.5	1.2	0.6	0.5	0.9	0.6	NA	Pinedale AQD Short Form
5/15/2015	6/19/2014	AP-16606	Jonah Energy	Cabrito 13-30 CF			16.6	7.6	0.0	0.0	18.1	6.5	-1.5	1.1	-1.5	1.2	NA	Pinedale AQD Short Form
	6/23/2014	AP-16599	Jonah Energy	Stud Horse Butte 13-26 CF	MD-16599	10/21/2014	8.0	3.6	0.0	0.0	8.6	3.4	-0.6	0.2	-0.6	0.2	NA	Pinedale AQD Short Form
	6/24/2014	AP-16602	Jonah Energy	CAB 72-29 CF	MD-16602	10/21/2014	30.2	8.5	0.0	0.0	21.4	8.9	8.8	-0.4	13.2	-0.4	NA	Pinedale AQD Short Form
11/28/2014	6/26/2014	AP-16644	Jonah Energy	SHB 6-32 CF	MD-16644	12/30/2014	9.3	3.6	173.4	14.9	0.0	0.0	-164.1	-11.3	-164.1	-11.3	NA	Pinedale AQD Short Form
	7/2/2014	AP-16632	Jonah Energy	SHB 11-17 CF	MD-16632	10/28/2014	15.8	5.8	0.0	0.0	14.9	5.5	0.9	0.3	1.4	0.3	NA	Pinedale AQD Short Form
	7/2/2014	AP-16633	Jonah Energy	SHB 7-16 CF	MD-16633	10/28/2014	13.3	6.0	0.0	0.0	8.0	3.6	5.3	2.4	8.0	2.6	NA	Pinedale AQD Short Form
5/15/2015	7/14/2014	AP-16726	Jonah Energy	SHB 4-26 CF			20.9	8.3	0.0	0.0	32.2	11.5	-11.3	-3.2	-11.3	-3.2	NA	Pinedale AQD Short Form
	7/15/2014	AP-16730	Jonah Energy	SHB 13-35 CF	MD-16730	11/12/2014	7.4	3.0	24.8	5.1	--	--	-17.4	-2.1	-17.4	-2.1	NA	Pinedale AQD Short Form
	7/16/2014	AP-16731	Jonah Energy	SHB 4-35 CF	MD-16731	11/12/2014	6.6	2.6	0.0	0.0	10.0	2.1	-3.4	0.5	-3.4	0.6	NA	Pinedale AQD Short Form
	7/17/2014	AP-16719	Jonah Energy	YP 4-12 CF	MD-16719	11/12/2014	6.1	2.4	0.0	0.0	15.4	4.6	-9.3	-2.2	-9.3	-2.2	NA	Pinedale AQD Short Form
10/24/2014	7/28/2014	AP-16760	Jonah Energy	SHB 16-32			2.8	1.4	0.0	0.0	1.8	1.6	1.0	-0.2	1.5	-0.2	NA	Pinedale AQD Short Form
11/7/2014	8/11/2014	AP-16871	Jonah Energy	SHB 1-34	MD-16871	12/9/2014	6.6	3.4	0.0	0.0	4.8	1.8	1.8	1.6	2.7	1.8	NA	Pinedale AQD Short Form
11/7/2014	8/13/2014	AP-16870	Jonah Energy	SHB 11-34	MD-16870	12/9/2014	5.6	2.8	0.0	0.0	7.1	2.9	-1.5	-0.1	-1.5	-0.1	NA	Pinedale AQD Short Form
11/7/2014	8/13/2014	AP-16868	Jonah Energy	YP 8-13	MD-16868	12/9/2014	6.5	2.6	0.0	0.0	23.4	2.6	-16.9	0.0	-16.9	0.0	NA	Pinedale AQD Short Form
11/14/2014	8/18/2014	AP-16887	Jonah Energy	SHB 1-29	MD-16887	12/16/2014	16.7	6.1	0.0	0.0	17.9	5.1	-1.2	1.0	-1.2	1.1	NA	Pinedale AQD Short Form
11/14/2014	8/18/2014	AP-16895	Jonah Energy	SHB 124-11	MD-16895	12/16/2014	5.3	2.9	0.0	0.0	25.9	3.8	-20.6	-0.9	-20.6	-0.9	NA	Pinedale AQD Short Form
11/14/2014	8/18/2014	AP-16896	Jonah Energy	SHB 2-34	MD-16896	12/16/2014	7.6	3.4	0.0	0.0	5.7	2.9	1.9	0.5	2.9	0.6	NA	Pinedale AQD Short Form
11/14/2014	8/18/2014	AP-16897	Jonah Energy	SHB 7-15	MD-16897	12/16/2014	6.2	3.0	0.0	0.0	13.1	5.1	-6.9	-2.1	-6.9	-2.1	NA	Pinedale AQD Short Form
11/14/2014	8/20/2014	AP-16884	Jonah Energy	JF 1-8	MD-16884	12/16/2014	3.1	1.9	0.0	0.0	17.8	2.9	-14.7	-1.0	-14.7	-1.0	NA	Pinedale AQD Short Form
11/14/2014	8/22/2014	AP-16885	Jonah Energy	C-SHB 10-30	MD-16885	12/16/2014	7.1	3.2	0.0	0.0	12.3	3.2	-5.2	0.0	-5.2	0.0	NA	Pinedale AQD Short Form
11/14/2014	8/22/2014	AP-16883	Jonah Energy	CAB 61-13	MD-16883	12/16/2014	12.8	4.0	0.0	0.0	13.1	4.0	-0.3	0.0	-0.3	0.0	NA	Pinedale AQD Short Form
11/14/2014	8/22/2014	AP-16882	Jonah Energy	JF 45-8H	MD-16882	12/16/2014	3.4	1.6	0.0	0.0	3.8	1.5	-0.4	0.1	-0.4	0.1	NA	Pinedale AQD Short Form
12/19/2014	8/29/2014	AP-A0000024	Jonah Energy	SHB 1-32	P-0004218	1/21/2015	4.0	2.0	0.0	0.0	10.5	1.9	-6.5	0.1	-6.5	0.1	NA	Pinedale AQD Short Form
12/19/2014	8/29/2014	AP-A0000023	Jonah Energy	HAC 5-20	P-0004096	1/21/2015	1.9	2.1	0.0	0.0	6.9	0.8	-5.0	1.3	-5.0	1.4	NA	Pinedale AQD Short Form
12/19/2014	8/29/2014	AP-A0000025	Jonah Energy	CU 2-18	P-0004498	1/21/2015	1.4	1.1	0.0	0.0	7.2	0.6	-5.8	0.5	-5.8	0.6	NA	Pinedale AQD Short Form
12/19/2014	8/29/2014	AP-A0000027	Jonah Energy	CS 10-36	P-0004728	1/21/2015	1.8	1.8	0.0	0.0	7.2	0.6	-5.4	1.2	-5.4	1.3	NA	Pinedale AQD Short Form
12/19/2014	8/29/2014	AP-A0000026	Jonah Energy	SHB 4-33	P-0004528	1/21/2015	5.4	2.7	0.0	0.0	4.6	3.0	0.8	-0.3	1.2	-0.3	NA	Pinedale AQD Short Form
5/15/2015	9/5/2014	AP-A0000061	Jonah Energy	SHB 9-33			3.2	2.0	0.0	0.0	7.9	2.1	-4.7	-0.1	-4.7	-0.1	NA	Pinedale AQD Short Form
5/15/2015	9/5/2014	AP-A0000056	Jonah Energy	CF 15-24			1.8	2.1	0.0	0.0	7.5	0.6	-5.7	1.5	-5.7	1.7	NA	Pinedale AQD Short Form
	9/11/2014		Jonah Energy	CAB 14-25 Engine Mod			0.3	0.2	0.0	0.0	0.3	0.2	0.0	0.0	0.0	0.0	NA	Full Application - Engine Only
11/28/2014	9/11/2014	AP-A0000135	Jonah Energy	SHB 15-27 microturbine removal	P-0000014	1/9/2015	-0.3	-0.2	0.0	0.0	--	--	-0.3	-0.2	-0.3	-0.2	NA	Full Application - Engine Only
1/2/2015	9/12/2014	AP-A0000053	Jonah Energy	CAB 14-25	P-0006018	2/3/2015	8.1	4.4	0.0	0.0	9.8	3.3	-1.7	1.1	-1.7	1.2	NA	Pinedale AQD Short Form
5/15/2015	9/12/2014	AP-A0000051	Jonah Energy	CF 16-2			1.8	2.1	0.0	0.0	6.9	0.5	-5.1	1.6	-5.1	1.8	NA	Pinedale AQD Short Form
1/2/2015	9/12/2014	AP-A0000052	Jonah Energy	CF 7-35	P-0005969	2/3/2015	1.8	1.1	0.0	0.0	6.3	0.5	-4.5	0.6	-4.5	0.7	NA	Pinedale AQD Short Form
1/2/2015	9/12/2014	AP-A0000083	Jonah Energy	COR 3-31	P-0006057	2/3/2015	10.1	2.6	0.0	0.0	37.7	3.6	-27.6	-1.0	-27.6	-1.0	NA	Pinedale AQD Short Form
5/15/2015	9/12/2014	AP-A0000082	Jonah Energy	CF 16-14			1.8	2.1	0.0	0.0	7.9	0.8	-6.1	1.3	-6.1	1.4	NA	Pinedale AQD Short Form
	9/19/2014		Jonah Energy	CS 12-36			2.3	1.7	0.0	0.0	8.5	0.5	-6.2	1.2	-6.2	1.3	NA	Pinedale AQD Short Form
	9/23/2014		Jonah Energy	SHB 48-16			1.7	1.2	0.0	0.0	6.5	0.8	-4.8	0.4	-4.8	0.4	NA	Pinedale AQD Short Form
	9/23/2014		Jonah Energy	SHB 48-22			2.7	1.7	0.0	0.0	27.5	4.2	-24.8	-2.5	-24.8	-2.5	NA	Pinedale AQD Short Form
	9/26/2014		Jonah Energy	JF 1-5X			6.9	3.2	28.6	4.8	--	--	-21.7	-1.6	-21.7	-1.6	NA	Pinedale AQD Short Form
	9/26/2014		Jonah Energy	SHB 41-11			3.6	1.4	0.0	0.0	3.8	1.3	-0.2	0.1	-0.2	0.1	NA	Pinedale AQD Short Form
	9/26/2014		Jonah Energy	Tot Federal #1			3.3	1.2	0.0	0.0	6.3	0.8	-3.0	0.4	-3.0	0.4	NA	Pinedale AQD Short Form
	9/26/2014		Jonah Energy	SHB 14-33			4.5	1.7	0.0	0.0	4.5	1.6	0.0	0.1	0.0	0.1	NA	Pinedale AQD Short Form
	9/29/2014		Jonah Energy	SHB 11-20			13.2	3.6	0.0	0.0	28.5	5.1	-15.3	-1.5	-15.3	-1.5	NA	Pinedale AQD Short Form
	9/30/2014		Jonah Energy	SHB 72-9			16.8	5.9	0.0	0.0	35.3	11.6	-18.5	-5.7	-18.5	-5.7	NA	Pinedale AQD Short Form
2/6/2015	11/3/2014	AP-A0000261	Jonah Energy	SHB 12-36	P-0010206	3/10/2015	7.0	2.7	0.0	0.0	7.8	2.9	-0.8	-0.2	-0.8	-0.2	NA	IMPACT Forms
2/6/2015	11/3/2014	AP-A0000262	Jonah Energy	SAG 17-30	P-0009849	3/10/2015	2.3	1.5	0.0	0.0	4.9	2.1	-2.6	-0.6	-2.6	-0.6	NA	IMPACT Forms
2/6/2015	11/5/2014	AP-A0000263	Jonah Energy	SAG 73-20	P-0009874	3/10/2015	3.9	1.8	0.0	0.0	2.8	1.2	1.1	0.6	1.7	0.7	NA	IMPACT Forms
2/6/2015	11/7/2014	AP-A0000264	Jonah Energy	CAB 2-31	P-0010210	3/10/2015	3.9	1.7	0.0	0.0	6.1	2.1	-2.2	-0.4	-2.2	-0.4	NA	IMPACT Forms
1/23/2015	12/2/2014	AP-A0000142	Jonah Energy	Ten (10) Portable Rod Pump Engines	P-0002551	2/24/2015	10.0	7.0	0.0	0.0	--	--	10.0	7.0	15.0	7.7	NA	IMPACT Forms
4/3/2015	12/5/2014	AP-A0000426	Jonah Energy	JF 5-4			7.9	4.1	0.0	0.0	6.4	2.7	1.5	1.4	2.3	1.5	NA	IMPACT Forms
3/20/2015	12/5/2014	AP-A0000363	Jonah Energy	SHB 3-34			6.7	3.3	0.0	0.0	7.2	2.6	-0.5	0.7	-0.5	0.8	NA	IMPACT Forms
4/3/2015	12/5/2014	AP-A0000429	Jonah Energy	SHB 2-36			7.5	3.0	0.0	0.0	7.4	3.4	0.1	-0.4	0.1	-0.4	NA	IMPACT Forms
4/3/2015	12/5/2014	AP-A0000425	Jonah Energy	SHB 10-33			5.6	2.5	0.0	0.0	16.4	4.8	-10.8	-2.3	-10.8	-2.3	NA	IMPACT Forms
4/3/2015	12/5/2014	AP-A0000427	Jonah Energy	SHB 12-29			6.7	3.2	0.0	0.0	28.6	3.4	-21.9	-0.2	-21.9	-0.2	NA	IMPACT Forms
4/3/2015	12/5/2014	AP-A0000423	Jonah Energy	JF 3-5			3.0	1.4	0.0	0.0	9.1	1.2	-6.1	0.2	-6.1	0.2	NA	IMPACT Forms
4/24/2015	12/16/2014	AP-A0000379	Jonah Energy	HAC 14-30 Compressor Engine Replacement			8.1	5.8	0.5	8.1	0.0	0.0	7.6	-2.3	11.4	-2.3	NA	IMPACT Forms
3/27/2015	12/19/2014	AP-A0000415	Jonah Energy	JF 1-6			7.8	2.9	0.0	0.0	32.3	5.2	-24.5	-2.3	-24.5	-2.3	NA	IMPACT Forms
3/27/2015	12/19/2014	AP-A0000422	Jonah Energy	JF 1-4X			9.3	3.3	0.0	0.0	12.2	1.6	-2.9	1.7	-2.9	1.9	NA	IMPACT Forms
4/3/2015	12/22/2014	AP-A0000424	Jonah Energy	SHB 11-22			7.7	3.5	0.0	0.0	17.1	3.2	-9.4	0.3	-9.4	0.3	NA	IMPACT Forms
3/27/2015	12/22/2014	AP-A0000421	Jonah Energy	SHB 4-27			14.1	6.1	0.0	0.0	11.5	6.3	2.6	-0.2	3.9	-0.2	NA	IMPACT Forms
N/A	12/30/2014	Incorporated into previous WDEQ application	Jonah Energy	CAB 13-30			18.7	7.3	0.0	0.0							NA	IMPACT Forms
4/17/2015	1/16/2015	AP-A0000465	Jonah Energy	JF 2-8X			5.4	2.7	0.0	0.0	30.6	3.0	-25.2	-0.3	-25.2	-0.3	NA	IMPACT Forms
4/17/2015	1/16/2015	AP-A0000464	Jonah Energy	JF 24-9			2.3	1.1	0.0	0.0	3.7	1.4	-1.4	-0.3	-1.4	-0.3	NA	IMPACT Forms
4/17/2015	1/16/2015	AP-A0000463	Jonah Energy	JF 13-7			2.5	1.4	0.0	0.0	3.2	1.2	-0.7	0.2	-0.7	0.2	NA	IMPACT Forms
4/17/2015	1/19/2015	AP-A0000458	Jonah Energy	SHB 1-35			10.7	4.2	0.0	0.0	8.5	3.3	2.2	0.9	3.3	1.0	NA	IMPACT Forms
4/24/2015	1/21/2015	AP-A0000487	Jonah Energy	JF 5-6			4.5	2.4	0.0	0.0	5.6	2.0	-1.1	0.4	-1.1	0.4	NA	IMPACT Forms

4/24/2015	1/27/2015	AP-A0000491	Jonah Energy	JF 1-5			6.6	3.0	0.0	0.0	24.6	4.0	-18.0	-1.0	-18.0	-1.0	NA	IMPACT Forms
4/24/2015	1/30/2015	AP-A0000515	Jonah Energy	YP 1-13			5.0	2.4	0.0	0.0	18.2	2.2	-13.2	0.2	-13.2	0.2	NA	IMPACT Forms
5/1/2015	1/30/2015	AP-A0000533	Jonah Energy	YP 7-2			2.8	1.4	0.0	0.0	2.9	1.3	-0.1	0.1	-0.1	0.1	NA	IMPACT Forms
5/1/2015	1/30/2015	AP-A0000532	Jonah Energy	YP 10-13			4.6	2.3	0.0	0.0	27.8	3.5	-23.2	-1.2	-23.2	-1.2	NA	IMPACT Forms
5/8/2015	1/30/2015	AP-A0000535	Jonah Energy	YP 16-13			5.0	2.6	0.0	0.0	24.5	2.8	-19.5	-0.2	-19.5	-0.2	NA	IMPACT Forms
5/1/2015	1/30/2015	AP-A0000534	Jonah Energy	YP 10-14			4.6	2.5	0.0	0.0	23.4	3.3	-18.8	-0.8	-18.8	-0.8	NA	IMPACT Forms
	2/23/2015	AP-A0000604	Jonah Energy	JF 12-7			4.6	1.8	18.7	3.6	0.0	0.0	-14.1	-1.8	-14.1	-1.8	NA	IMPACT Forms
	2/23/2015	AP-A0000602	Jonah Energy	JF 8-7			5.5	2.5	0.0	0.0	7.4	2.5	-1.9	0.0	-1.9	0.0	NA	IMPACT Forms
	2/23/2015	AP-A0000603	Jonah Energy	SHB 1-34			6.8	3.2	0.0	0.0	6.6	3.4	0.2	-0.2	0.3	-0.2	NA	IMPACT Forms
	3/19/2015	AP-A0000728	Jonah Energy	SHB 8-14			14.4	6.0	0.0	0.0	9.2	3.6	5.2	2.4	7.8	2.6	NA	IMPACT Forms
	3/23/2015	AP-A0000765	Jonah Energy	JF 1-5X			8.0	4.2	50.6	4.1	--	--	-42.6	0.1	-42.6	0.1	NA	IMPACT Forms
	3/23/2015	AP-A0000763	Jonah Energy	SHB 6-35			9.9	4.3	0.0	0.0	10.9	4.1	-1.0	0.2	-1.0	0.2	NA	IMPACT Forms
	3/26/2015	AP-A0000778	Jonah Energy	SHB 10-35 Compressor Engine			4.1	6.1	0.0	0.0	0.0	0.0	4.1	6.1	6.2	6.7	NA	IMPACT Forms
	3/26/2015	AP-A0000777	Jonah Energy	YP 4-12 Compressor Engine			6.5	9.5	0.0	0.0	0.0	0.0	6.5	9.5	9.8	10.5	NA	IMPACT Forms
	4/7/2015	AP-A0000853	Jonah Energy	SHB 67-11			15.1	7.5	0.0	0.0	13.1	5.1	2.0	2.4	3.0	2.6	NA	IMPACT Forms
	4/10/2015	AP-A0000846	Jonah Energy	CAB 13-19			12.4	4.5	0.0	0.0	13.9	3.7	-1.5	0.8	-1.5	0.9	NA	IMPACT Forms
	4/15/2015	AP-A0000897	Jonah Energy	SHB 12-15			10.5	4.2	0.0	0.0	9.7	3.3	0.8	0.9	1.2	1.0	NA	IMPACT Forms
	4/29/2015	AP-A0000944	Jonah Energy	SHB 1-29 Compressor Engine			12.6	9.8	0.0	0.0	0.0	0.0	12.6	9.8	18.9	10.8	NA	IMPACT Forms
	4/29/2015	AP-A0000957	Jonah Energy	SHB 6-32 Compressor Engine			12.6	9.8	0.0	0.0	0.0	0.0	12.6	9.8	18.9	10.8	NA	IMPACT Forms
	4/29/2015	AP-A0000943	Jonah Energy	SHB 2-34 Compressor Engine			12.6	9.8	0.0	0.0	0.0	0.0	12.6	9.8	18.9	10.8	NA	IMPACT Forms
	4/29/2015	AP-A0000942	Jonah Energy	SHB 13-26 Compressor Engine			12.6	9.8	0.0	0.0	0.0	0.0	12.6	9.8	18.9	10.8	NA	IMPACT Forms
	5/12/2015	AP-A0001018	Jonah Energy	SOL 9-36			4.8	3.7	0.0	0.0	17.6	2.0	-12.8	1.7	-12.8	1.9	NA	IMPACT Forms
	5/12/2014	AP-A0001026	Jonah Energy	CAB 72-29			16.4	8.9	0.0	0.0	30.2	8.5	-13.8	0.4	-13.8	0.4	NA	IMPACT Forms
	5/13/2015	AP-A0001019	Jonah Energy	SHB 48-22			3.4	2.3	0.0	0.0	34.4	4.2	-31.0	-1.9	-31.0	-1.9	NA	IMPACT Forms
	5/26/2015		Jonah Energy	SHB 6-32 [SHB 1-33 consolidation]			8.0	4.4	47.5	2.1	9.3	3.6	-48.8	-1.3	-48.8	-1.3	NA	IMPACT Forms
					JONAH ENERGY TOTAL		**4672.1**	**1547.1**	**3987.3**	**761.1**	**3143.6**	**787.4**	**-2477.5**	**-8.2**	**-2917.5**	**-50.0**		

CERTIFICATION OF VAPOR COLLECTION SYSTEMS

Location: SHB 6-32 Current Route: 8 Permit #: _____ Date: 5/6/2015

Start Time: 9:31 AM am / pm Line Pressure 199 psi

TANKS — √ if completed

Confirm thief hatch gasket integrity and seal:	√	
Confirm thief hatch spring size is 16 ozs:	√	
Confirm thief hatch is closed:	√	
Confirm that all vapors from the tanks are routed to the combustor:	√	Method: Sensory
Confirm that all vapor pipe connections are tight:	√	(PID, FLIR, Sensory)
Confirm that a drip tank is installed and functioning properly:	√	
Confirm PRV functioning properly and type: (Enardo w/ ≥8 oz. or A.G.)	√	AG
Confirm that all production tanks have VOC's controlled	√	

GLYCOL DEHYDRATORS — √ if completed

Confirm that all valves are in proper position to route vapors to combustor:	√	Method: Sensory
Confirm that vapor piping is installed properly and all connections are tight:	√	(PID, FLIR, Sensory)
Confirm that the site has a valve tagging program in plac (office)	√	
Confirm that all pneumatic controllers are No Bleed/Low Bleed controllers	√	

GLYCOL HEAT MEDIUM PUMPS — √ if completed

Confirm that all pneumatic pumps are routed to the combustor:	√	Method: Sensory
Confirm that all connections are tight:	√	(PID, FLIR, Sensory)

COMBUSTORS (VOC/BTEX) — √ if completed (PID, FLIR, Sensory)

List the type, size and quantity of combustors on location:

Type:	TCI	Size:	4000	QTY:	1
Type:		Size:		QTY:	

Confirm that the combustor is not smoking:	√
Confirm that the pilot light is lit:	√
Confirm that all still vent vapors are routed to combustor:	√
Confirm pilot flame recording device installed and operational:	√
Confirm that the combustor is not going down on high temp shutoff:	√
Confirm that the combustor is handling all the vapors:	√
Confirm that the combustor is functioning properly:	√

SYSTEM CHECKS and PRESSURE TEST — √ if completed

Confirm that all vapor collection piping is steel and properly sized:	√
Confirm that vapor collection piping is designed to limit blockage (freezing) issues:	√
Confirm that tank pressure was monitored for a minimum of 10 Minutes and/or 3 dump cycles:	√
Confirm that tank pressure did not exceed PRV set points:	√
Confirm no change in PRV emissions during pressure test:	√

Method used to determine change (PID, FLIR, Sensory) : Sensory

Record the pressure monitoring records for 3 dump cycles and/or maximum reading for 10 minutes below:

Pressure Reading #1 (ounces)	Pressure Reading #2 (ounces)	Pressure Reading #3 (ounces)
1.00	1.00	1.00

Date & who Assigned	Comments:(please note any leaks found, problems or deficiencies needing correction)	Date of Completion	Initials
	#1 None found		
	#2		
	#3		

	Date	Initials
Comments and Site Verified by: Glenn Whicker	5/6/2015	GW
Comments and Site Verified by:		

√ if all issues are resolved √

Signature: _____

Printed Name: Glenn Whicker

Date Verified: 5/6/2015

Provide completed forms, documentation of methods, pressure monitoring records to supervisor.

JONAH ENERGY LLC

May 26, 2015

Stationary Source Compliance Program Manager
Wyoming Department of Environmental Quality
Air Quality Division
Herschler Building – 2E
122 West 25th Street
Cheyenne, WY 82002

RE: Request for Permit to Operate
Stud Horse Butte (SHB) 6-32 Central Facility, Sublette County, Wyoming

Dear WDEQ:

Please consider this letter as a request for the Permit to Operate, as required by Wyoming Department of Environmental Quality (WDEQ) Standards and Regulations Chapter 6 Section 2 (a) (iii), for the SHB 6-32 Central Facility.

As stated in WAQS&R Chapter 6 Section 2 (a) (iii) *" facilities or sources not subject to the provisions of Chapter 6 Section 3 of these regulations shall obtain a Chapter 6 Section 2 operating permit from the Department, pursuant to this section, for operation after a 120-day start-up period."*

Jonah Energy has been following the Wyoming Presumptive BACT process when applying for permits for these facilities. As such, these well production facilities were constructed and operating prior to the application submittal. Therefore, the Chapter 6, Section 2 permit application and the subsequent permit is based on the actual equipment and operating conditions at the time of submittal.

Unless otherwise notified by the Division, Jonah Energy will consider this letter and complying with the WDEQ Presumptive BACT requirements to be sufficient documentation for the required demonstration of compliance with Wyoming Air Quality Standards and Regulations.

If you have any questions please contact Charles Cornell at 720.577.1251, or via email at chuck.cornell@jonahenergy.com.

Sincerely,

Charles Cornell
Sr. Regulatory Lead

Jonah Energy

707 17th Street Suite 2700 Denver CO 80202 USA

Process Description

The Stud Horse Butte (SHB) 6-32 is a Central Production Facility that receives production from 71 existing producing natural gas wells. Additionally, as part of this air permit application the 4 existing producing wells from the SHB 1-33 Central Production Facility are being consolidated into the SHB 6-32 Central Production Facility, for a total of 75 producing gas wells. Field gas and production fluids from all wells flow into a common manifold.

The commingled liquid stream containing natural gas, condensate, and produced water flows from the wells, being heated as the piping passes through one (1) 1.5 MMBtu/hr indirect heater. The stream is heated to a desired temperature range before being routed to a high-pressure separator, where the fluids are separated into individual phases (natural gas, condensate, and produced water). One (1) 0.5 MMBtu/hr indirect heater is also located at the facility servicing the low-pressure separator.

Condensate flows from the low pressure separator to six (6) 400-bbl storage tanks. The condensate is periodically measured and loaded into tank trucks for sales. The tank vapors are routed to one (1) enclosed combustor where the hydrocarbon vapors are burned.

Produced water flows from the inlet separators to three (3) 400-bbl produced water tanks. It is periodically trucked off site. Vapors from the produced water tanks are also routed to the enclosed combustor where hydrocarbon vapors are burned.

Field gas exits the inlet separators and flows to the one (1) 20 MMCFD glycol dehydration unit on site. This unit is equipped with three (3) Kimray 20015SC glycol circulation pumps, two are active and one is a spare. Water vapor is removed from the gas, the gas is metered, and it enters the gas gathering pipeline system.

The rich triethylene glycol (TEG), used in the dehydration unit, is routed through one (1) 0.12 MMBtu/hr heated flash tank. The flash tank overhead vapors are either used as fuel or sent to the enclosed combustor.

Water is removed from the rich TEG in a regenerator equipped with one (1) 0.75 MMBtu/hr reboiler heater. Water vapor removed from the rich TEG is condensed in a 130°F regenerator overhead condenser. The non-condensable vapors are sent to the enclosed combustor. The regenerated, lean TEG is re-circulated and re-used in the system.

There are four (4) pneumatic heat trace circulation pumps and zero (0) pneumatic methanol injection pumps that use field gas as the motive power fluid. The motive gas exhausts emitted from the pneumatic pumps associated with this facility are routed to the enclosed combustor.

Fugitive emissions are associated with miscellaneous piping connections, valves, tank vent valves, and flanges.

This drawing is a general representation based on the equipment of the SHB 06-32 Central Facility. The actual orientation of equipment at this facility may be different.

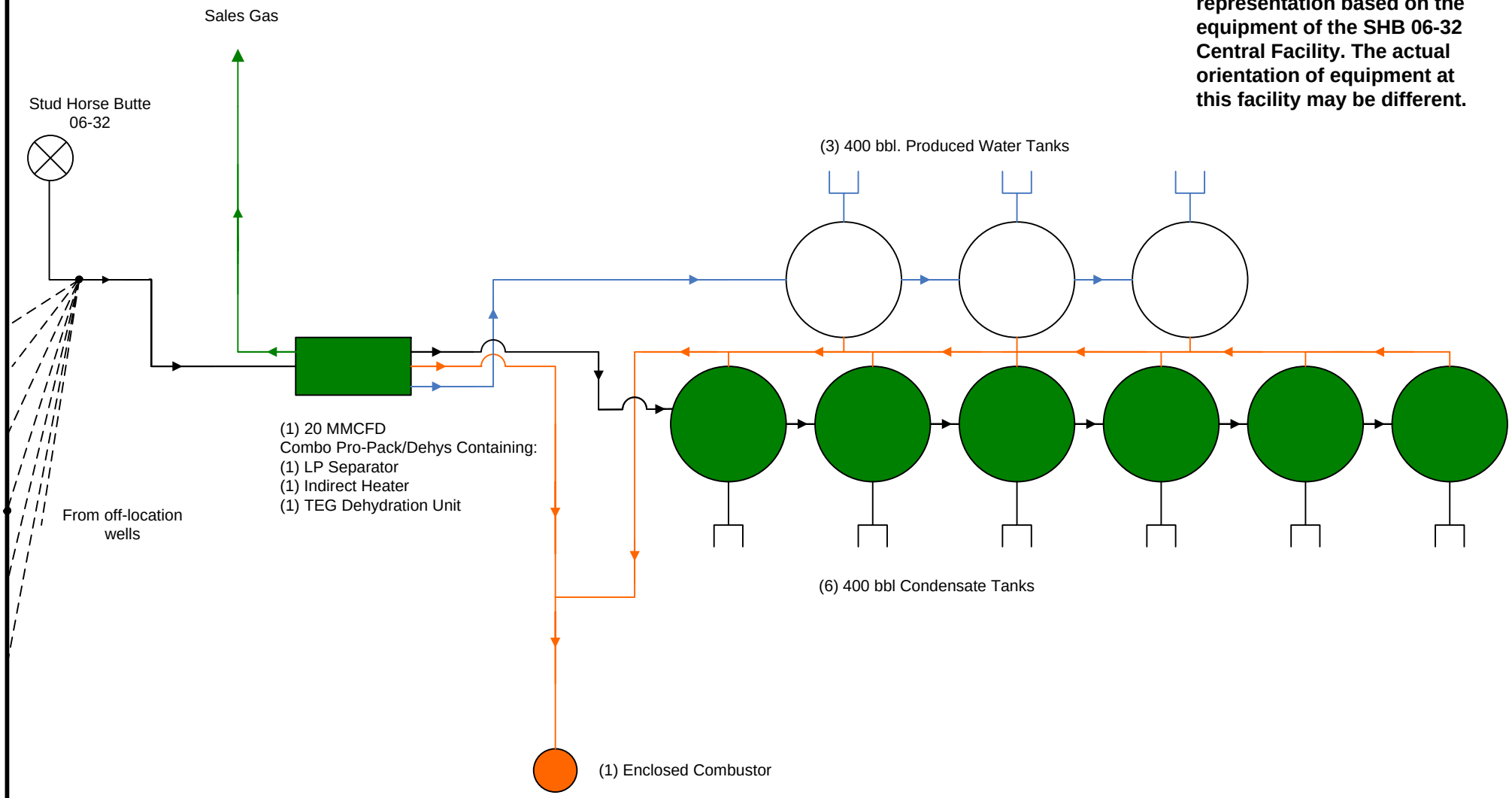

LEGEND:

Wellhead

Flow Line

-Combo Production Unit

-Tank

-Future Combo Production Unit/ Tank

Prepared by:

JONAH ENERGY LLC

Stud Horse Butte 06-32 Central Facility

Sublette County, WY
SE NW Sec 32, T29N, R108W
Latitude: 42.44059°
Longitude: -109.74538°
Elevation: 7,107'

-NOT TO SCALE-

Drawn by: CAC	Date: 05/20/2015
Rev. by:	Date Rev:

Company Name: **Jonah Energy LLC**
Field Name: **Jonah Field**
Facility Name: **Stud Horse Butte 6-32**

Emissions Summary (TPY)

Baseline Emissions [Jan-Mar 2008]:	**Stud Horse Butte 1-33**	VOC	47.5	HAP	2.3	NOx	2.1	CO 1.5
Baseline Includes Addition of High-Bleed Pneumatic Devices not Previously Included in SHB 1-33 Permit MD-1529, and considers uncontrolled pneumatic pumps, since permit doesn't account that they were previously controlled								
Current Permitted Emissions [MD-16644]	**Stud Horse Butte 6-32**	VOC	9.3	HAP	0.7	NOx	3.6	CO 1.7
Requested Emissions - Current Application:	**Stud Horse Butte 6-32**	VOC	8.0	HAP	0.7	NOx	4.4	CO 1.9
Offset Emissions:		VOC	-48.8			NOx	-1.4	
Offset Required:		VOC	**None**			NOx	**None**	

Production Value Comparsion

Baseline Production [Jan - Mar 2008]:	**Stud Horse Butte 1-33**	BPD	29.0	MMSCFD	2.8
Previously Permitted Production [MD-16644]:	**Stud Horse Butte 6-32**	BPD	140.0	MMSCFD	19.0
Requested Production - Current Application:	**Stud Horse Butte 6-32**	BPD	105.0	MMSCFD	13.0

CURRENT REQUESTED EMISSION CALCULATIONS

Company Name: **Jonah Energy LLC**
Field Name: **Jonah Field**
Facility Name: **Stud Horse Butte 6-32 Central Facility**

Wyoming Air Quality Application Emission Summary Sheet

Future Uncontrolled Production Equipment Emissions Based on Annualized Rate

			NOx		CO		SO2		Particulates		VOC		Total HAPs	
Ref No.	**Equipment**	**Note**	**lb/hr**	**TPY**	**lb/hr**	**TPY**	**lb/hr**	**TPY**	**lb/hr**	**TPY**	**lb/hr**	**TPY**	**lb/hr**	**TPY**
001	(1) 0.75 MMBtu/hr TEG Reboiler	a	0.08	0.35	0.07	0.29	0.000	0.002	0.006	0.027	0.001	0.004	0.000	0.000
002	(1) 0.12 MMBtu/hr Flash Tank Heater	a	0.01	0.06	0.01	0.05	0.000	0.000	0.001	0.004	0.000	0.001	0.000	0.000
003	(1) 1.5 MMBtu/hr Indirect Heater	a	0.16	0.70	0.13	0.59	0.001	0.004	0.012	0.053	0.002	0.008	0.000	0.000
004	(1) 0.5 MMBtu/hr Indirect Heater	a	0.05	0.23	0.04	0.20	0.000	0.001	0.004	0.018	0.001	0.003	0.000	0.000
005	(1) 20 MMSCFD TEG Dehydration Unit		0.00	0.0	0.00	0.0	0.00	0.0	0.00	0.0	36.68	160.6	17.92	78.5
006	(6) 400 bbl Condensate Tanks		0.00	0.0	0.00	0.0	0.00	0.0	0.00	0.0	4.00	126.5	1.12	4.91
007	Pneumatics (Pumps and Liquid Level Controllers)	b	0.00	0.0	0.00	0.0	0.00	0.0	0.00	0.0	12.18	27.3	0.43	1.0
008	Tank Truck Loading	c	0.00	0.0	0.00	0.0	0.00	0.0	0.00	0.0	20.29	1.6	0.79	0.06
009	Fugitives	d	0.00	0.0	0.00	0.0	0.00	0.0	0.00	0.0	0.18	0.8	0.02	0.08
010	(3) 400 bbl Produced Water Tanks	e	0.00	0.0	0.00	0.0	0.00	0.0	0.00	0.0	Not Est.			
011	Enclosed Combustors		0.00	0.0	0.00	0.0	0.00	0.0	0.00	0.0	0.00	0.0	0.00	0.0
	Total		**0.31**	**1.3**	**0.26**	**1.1**	**0.00**	**0.0**	**0.02**	**0.1**	**73.33**	**316.9**	**20.28**	**84.5**

NOTES: a - Burner emissions based on EPA AP-42 emission factors from Section 1.4, Tables 1.4-1 and 1.4-2 for uncontrolled natural gas burners, it is assumed that burners operate 8,760 hours per year, and a fuel heating value of 1112.16 Btu/SCF

b - Pneumatic VOC/HAP emissions based on VOC/HAP fraction of the field gas, and consumption rates of typical equipment used in this field area.

c - Tank Truck Loading VOC/HAP emissions are calculated per Chapter 6, Section 2 Permitting Guidance for Oil and Gas Production Facilities set forth by the WDEQ. HAP emissions for Tank Truck Loading are calculated by using the ratio of condensate tank VOC and HAP emissions.

d - Fugitive emissions account for VOC/HAP vapors from connectors, valves, tank hatches, and relief vent/valves. Emission Factors derived from Chapter 6, Section 2 Permitting Guidance for Oil and Gas Production Facilities.

e - There is currently no standard emissions estimating method for produced water tanks, VOC/HAP emissions from this source are considered insignificant.

Company Name: **Jonah Energy LLC**
Field Name: **Jonah Field**
Facility Name: **Stud Horse Butte 6-32 Central Facility**

Wyoming Air Quality Application Emission Summary Sheet

Future Controlled Production Equipment Emissions

			NOx		CO		SO2		Particulates		VOC		Total HAPs	
Ref No.	**Equipment**	**Note**	**lb/hr**	**TPY**	**lb/hr**	**TPY**	**lb/hr**	**TPY**	**lb/hr**	**TPY**	**lb/hr**	**TPY**	**lb/hr**	**TPY**
001	(1) 0.75 MMBtu/hr TEG Reboiler	a	0.08	0.35	0.07	0.29	0.0005	0.0021	0.0061	0.0267	0.0009	0.0040	0.0000	0.0000
002	(1) 0.12 MMBtu/hr Flash Tank Heater	a	0.01	0.06	0.01	0.05	0.0001	0.0003	0.0010	0.0043	0.0001	0.0006	0.0000	0.0000
003	(1) 1.5 MMBtu/hr Indirect Heater	a	0.16	0.70	0.13	0.59	0.0010	0.0042	0.0122	0.0534	0.0018	0.0079	0.0000	0.0000
004	(1) 0.5 MMBtu/hr Indirect Heater	a	0.05	0.23	0.04	0.20	0.0003	0.0014	0.0041	0.0178	0.0006	0.0026	0.0000	0.0000
005	(1) 20 MMSCFD TEG Dehydration Unit		0.00	0.0	0.00	0.0	0.000	0.00	0.00	0.00	0.30	1.3	0.08	0.3
006	(6) 400 bbl Condensate Tanks		0.00	0.0	0.00	0.0	0.00	0.0	0.00	0.0	0.58	2.5	0.02	0.1
007	Pneumatics (Pumps and Liquid Level Controllers)	b	0.00	0.0	0.00	0.0	0.00	0.0	0.00	0.0	0.51	1.7	0.02	0.1
008	Tank Truck Loading	c	0.00	0.0	0.00	0.0	0.00	0.0	0.00	0.0	20.29	1.62	0.79	0.06
009	Fugitives	d	0.00	0.0	0.00	0.0	0.00	0.0	0.00	0.0	0.18	0.8	0.02	0.08
010	(3) 400 bbl Produced Water Tanks	e	0.00	0.00	0.0	0.00	0.00	0.00	0.0	0.00	Insignificant			
011	Enclosed Combustors		0.69	3.0	0.17	0.8	0.00	0.00	0.00	0.0	0.00	0.001	0.00	0.0
	Total		**1.00**	**4.4**	**0.43**	**1.9**	**0.00**	**0.0**	**0.02**	**0.1**	**21.86**	**8.0**	**0.93**	**0.7**

NOTES: a - Burner emissions based on EPA AP-42 emission factors from Section 1.4, Tables 1.4-1 and 1.4-2 for uncontrolled natural gas burners, it is assumed that burners operate 8,760 hours per year, and a fuel heating value of 1112.16 Btu/SCF

b - Pneumatic VOC/HAP emissions based on VOC/HAP fraction of the field gas, and consumption rates of typical equipment used in this field area. Emissions based on 98% destruction efficiency as vapors are routed to combustor.

c - Tank Truck Loading VOC/HAP emissions are calculated per Chapter 6, Section 2 Permitting Guidance for Oil and Gas Production Facilities set forth by the WDEQ. HAP emissions for Tank Truck Loading are calculated by using the ratio of condensate tank VOC and HAP emissions.

d - Fugitive emissions account for VOC/HAP vapors from connectors, valves, tank hatches, and relief vent/valves. Emission Factors derived from Chapter 6, Section 2 Permitting Guidance for Oil and Gas Production Facilities.

e - There is currently no standard emissions estimating method for produced water tanks, VOC/HAP emissions from this source are considered insignificant.

f - Emissions are based on 98% destruction efficiency for flash tank, regenerator, and condensate tank vapors, and pneumatic pump motive gas exhaust.

g - Combustor emissions account for pilot gas and NOx,CO,and SO2 emissions from all controlled sources. The controlled VOC and HAP emissions have been allocated back to the individual contributing source.

Company Name: **Jonah Energy LLC**
Field Name: **Jonah Field**
Facility Name: **Stud Horse Butte 6-32 Central Facility**

Gas Analysis Calculation Sheet

Based on: **Jonah Composite**
Date of Sample: NA
Temp: 67 F
Pressure: 227 psig

							LHV BTU Content		HHV BTU Content	
Component	**Mole %**	**Mole Frac.**	**MW**	**Lb/Lb mole**	**VOC**	**HAP**	**Btu/scf**	**Btu/scf*Mole Frac**	**Btu/scf**	**Btu/scf*Mole Frac**
Carbon Dioxide	0.6663	0.0067	44.01	0.29			0.0	0.00	0.0	0.00
Hydrogen Sulfide	0.0000	0.0000	34.08	0.00			586.8	0.00	637.1	0.00
Nitrogen	0.2502	0.0025	28.02	0.07			0.0	0.00	0.0	0.00
Methane	90.1348	0.9013	16.04	14.46			909.4	819.69	1010.0	910.36
Ethane	5.4990	0.0550	30.07	1.65			1618.7	89.01	1769.6	97.31
Propane	1.9710	0.0197	44.09	0.87	0.87		2314.9	45.63	2516.1	49.59
Isobutane	0.4483	0.0045	58.12	0.26	0.26		3000.4	13.45	3251.9	14.58
n-butane	0.4514	0.0045	58.12	0.26	0.26		3010.8	13.59	3262.3	14.73
Isopentane	0.1823	0.0018	72.15	0.13	0.13		3699.0	6.74	4000.9	7.29
n-pentane	0.1277	0.0013	72.15	0.09	0.09		3706.9	4.73	4008.9	5.12
Cyclopentane	0.0000	0.0000	70.08	0.00	0.00		3512.2	0.00	3763.4	0.00
n-hexane	0.0443	0.0004	86.18	0.04	0.04	0.04	4404.1	1.95	4750.2	2.11
Cyclohexane	0.0263	0.0003	84.18	0.02	0.02		4179.9	1.10	4481.2	1.18
Other Hexanes	0.0801	0.0008	86.18	0.07	0.07		4392.7	3.52	4744.5	3.80
Heptanes	0.0428	0.0004	100.21	0.04	0.04		5100.3	2.18	5500.4	2.35
Methylcyclohexane	0.0323	0.0003	98.19	0.03	0.03		4863.9	1.57	5215.7	1.69
2,2,4-Trimethylpentane	0.0036	0.0000	114.22	0.00	0.00	0.00	5779.1	0.21	6231.5	0.22
Benzene	0.0134	0.0001	78.11	0.01	0.01	0.01	3591.1	0.48	3741.5	0.50
Toluene	0.0129	0.0001	92.14	0.01	0.01	0.01	4273.7	0.55	4474.5	0.58
Ethylbenzene	0.0002	0.0000	106.17	0.00	0.00	0.00	4970.7	0.01	5221.7	0.01
Xylenes	0.0019	0.0000	106.17	0.00	0.00	0.00	4957.4	0.09	5208.4	0.10
C8+Heavies	0.0110	0.0001	315.00	0.03	0.03		5796.3	0.64	5794.1	0.64
Totals	**100.0000**	**1.0000**		**18.36**	**1.88**	**0.07**		**1005.16**		**1112.16**

Weight Fraction of Vapors that are VOC: **0.103**
Weight Fraction of Vapors that are HAP: **0.004**

Company Name **Jonah Energy LLC**
Field Name: **Jonah Field**
Facility Name: **Stud Horse Butte 6-32 Central Facility**

Emission Calculation for External Combustion Sources

AP-42 Calculation Method

(For Estimating Emissions, Using Emission Factors from EPA AP-42, Table 1.4-1 and Table 1.4-2)

Burner Data

Reference No.	Burner Rating (MMBtu/Hr)	Equipment	Annual Op Time (hours)	Fuel Type	Fuel Htg Value (Btu/scf)	Weight Fraction VOC [1]
001	0.750	(1) 0.75 MMBtu/hr TEG Reboiler	8760	Field	1112	0.10
002	0.120	(1) 0.12 MMBtu/hr Flash Tank Heater	8760	Field	1112	0.10
003	1.500	(1) 1.5 MMBtu/hr Indirect Heater	8760	Field	1112	0.10
004	0.500	(1) 0.5 MMBtu/hr Indirect Heater	8760	Field	1112	0.10

1 - Weight Fraction of VOC is derived from the fuel gas analysis (MW_{VOC}/MW_{TOTAL})

Emission Factors

Reference No.	Burner Rating (MMBtu/Hr)	Emission Factors					
		NOx (Lb/MMFt^3)	CO (Lb/MMFt^3)	SO_2 (Lb/MMFt^3)	PM (Lb/MMFt^3)	TOC [2] (Lb/MMFt^3)	VOC [3] (Lb/MMFt^3)
001	0.750	100.0	84.0	0.6	7.6	11.0	1.1
002	0.120	100.0	84.0	0.6	7.6	11.0	1.1
003	1.500	100.0	84.0	0.6	7.6	11.0	1.1
004	0.500	100.0	84.0	0.6	7.6	11.0	1.1
EF Source		AP-42	AP-42	AP-42	AP-42	AP-42	Estimate

2- Total Organic Compunds (TOC)
3 - VOC emission factor determined by taking TOC factor times fraction of fuel gas that was VOC.

Emissions (Lb/Hr) = E.F. (Lb/MMft^3) * FHV/1020 * Burner Rating (MMbtu/Hr) * 1/1020 (btu/scf) * 1 MMft3/1x10^6 ft^3 * 1x10^6 Btu/MMbtu

Emissions (TPY) = Emissions (Lb/Hr) * Annual Operating Time (Hr/Yr) * 1 ton/2,000 Lb

Source Emissions

Reference No.	Source Emissions									
	NOx		CO		SO_2		PM		VOC	
	(Lb/Hr)	(TPY)	(Lb/Hr)	(TPY)	(Lb/Hr)	(TPY)	(Lb/Hr)	(TPY)	(Lb/Hr)	(TPY)
001	0.08	0.4	0.07	0.3	0.000	0.002	0.006	0.027	0.001	0.004
002	0.01	0.1	0.01	0.0	0.000	0.000	0.001	0.004	0.000	0.001
003	0.16	0.7	0.13	0.6	0.001	0.004	0.012	0.053	0.002	0.008
004	0.05	0.2	0.04	0.2	0.000	0.001	0.004	0.018	0.001	0.003

Company Name:	**Jonah Energy LLC**
Field Name:	**Jonah Field**
Facility Name:	**Stud Horse Butte 6-32 Central Facility**

Dehydration Unit Emissions Analysis Sheet

Uncontrolled Dehydration Unit Emissions

Annual Rate	**VOC**		**HAPS**	
13 MMSCFD	**lb/hr**	**TPY**	**lb/hr**	**TPY**
20MM Regenerator Emissions	27.76	121.6	17.05	74.7
20MM Flash Tank Emissions	8.92	39.1	0.87	3.8
TOTAL				
(1) 20 MMSCFD TEG Dehydration Unit	**36.68**	**160.6**	**17.92**	**78.5**

Controlled Dehydration Unit Emissions*

Annual Rate	**VOC**		**HAPS**	
13 MMSCFD	**lb/hr**	**TPY**	**lb/hr**	**TPY**
20MM Regenerator Emissions	0.12	0.55	0.06	0.27
20MM Flash Tank Emissions	0.18	0.78	0.017	0.08
TOTAL				
(1) 20 MMSCFD TEG Dehydration Unit	**0.30**	**1.33**	**0.08**	**0.35**

*Combustor has destruction efficiency of 98%. The Dehydration Unit has a condenser and regenerator, therefore the over all control efficiency is greater than 98%.

Company Name:	Jonah Energy LLC
Field Name:	Jonah Field
Facility Name:	Stud Horse Butte 6-32 Central Facility

Condensate Storage Tank Emissions Calculations

Uncontrolled Storage Tank Emissions

Annual Rate (BCPD)	105.0	
	lb/hr	TPY
Stock Tank VOC Flash Vent Gas	28.71	125.7
Tanks 4.0 W & B VOC Vent Gas	0.18	0.8
Total Stock Tank VOC Vent Gas	**4.00**	**126.5**
Stock Tank HAPs Flash Gas	**1.12**	**4.9**

User needs to in put data
Data calculated from Promax

Controlled Storage Tank Emissions*

Annual Rate (BCPD)	105.0	
	lb/hr	TPY
Stock Tank VOC Flash Vent Gas	0.57	2.5
Tanks 4.0 W & B VOC Vent Gas	0.00	0.02
Total Stock Tank VOC Vent Gas	**0.58**	**2.5**
Stock Tank HAPs Flash Gas	**0.02**	**0.1**

*Combustor has destruction efficiency of 98%.

Model Inputs		
Sample Temperature	66.67	oF
Sample Pressure	239	psia
Std Liquid Volumetric Flow	105	bbl/d
Number of Tanks	6	
Tank Size	400	BBL
Tank Temperature	45	oF
Tank Pressure	12	psia

Flash Tank Emission Calculation

Calculated VOC and HAP Emissions, Using Promax

Flash Gas Promax Output

Component	Mass Flow (lb/hr)	TPY
Methane	17.47	76.5
Ethane	9.38	41.1
Propane	10.80	47.3
Isobutane	4.34	19.0
n-butane	5.30	23.2
Neopentane	0.05	0.2
Isopentane	2.50	10.9
n-pentane	1.85	8.1
2,2 Dimethylbutane	0.09	0.4
2,3 Dimethylbutane	0.24	1.1
2-Methylpentane	0.59	2.6
3-Methylpentane	0.32	1.4
n-hexane	0.41	1.8
Heptanes	1.18	5.2
Octanes	0.20	0.9
Nonanes	0.09	0.4
Decanes Plus	0.04	0.2
Nitrogen	0.04	0.2
Carbon Dioxide	0.77	3.4
Benzene	0.22	1.0
Toluene	0.27	1.2
Ethylbenzene	0.01	0.0
M &P Xylenes	0.06	0.3
O-Xylenes	0.01	0.0
2,2,4-Trimethylpentane	0.14	0.6
TOTAL	**56.4**	**246.9**

STD Gas Flow	
0.0176	MMSCFD
733.44	SCFHR

API Gravity
64.68

TOTAL Flash Emissions		
	lb/hr	TPY
VOC	**28.71**	**125.7**
HAPS	**1.1**	**4.9**

VOC Flash Gas (lb/hr) = Total Flash Gas (lb/hr) - Non-VOC Components (lb/hr)
VOC Flash Gas (TPY) = VOC Flash Gas (lb/hr) * 8760 hrs/yr * 1 ton/2000 lbs
HAP Flash Gas (lb/hr) = Sum of HAP components (lb/hr)
HAP Flash Gas (TPY) = HAP Flash Gas (lb/hr) * 8760 hrs/yr * 1 ton/2000 lbs

Component	Mol %	Normalized	Mol Frac
Methane	9.24446	9.2445	0.09
Ethane	3.0519	3.0519	0.03
Propane	3.53456	3.5346	0.04
i-Butane	1.91326	1.9133	0.02
n-Butane	3.10256	3.1026	0.03
Propane, 2,2-Dimethyl-	0.03224	0.0322	0.00
i-Pentane	2.8428	2.8428	0.03
n-Pentane	2.85142	2.8514	0.03
Butane, 2,2-Dimethyl-	0.19142	0.1914	0.00
Butane, 2,3-Dimethyl-	0.71348	0.7135	0.01
Pentane, 2-Methyl-	1.94474	1.9447	0.02
Pentane, 3-Methyl-	1.17562	1.1756	0.01
n-Hexane	3.19008	1.9725	0.02
n-Heptane	20.96502	16.2393	0.16
n-Octane	15.5326	8.8870	0.09
n-Nonane	11.58426	11.5843	0.12
n-Decane	17.9626	17.9626	0.18
Nitrogen	0.01098	0.0110	0.00
CO2	0.15588	0.1559	0.00
Benzene	1.21758	1.2176	0.01
Toluene	4.72568	4.7257	0.05
Ethylbenzene	0.47268	0.4727	0.00
m-Xylene	3.94074	3.9407	0.04
o-Xylene	0.73086	0.7309	0.01
Pentane, 2,2,4-Trimethyl-	1.5013	1.5013	0.02
Total	**112.5887**	**99.9999**	**1.0000**

Calculation for Working and Breathing Losses

Calculated VOC Emissions, Using Promax

Size of Tank (bbl)	No. Tanks	Material Category
400	6	Light Organics

STD Gas Flow	
7.55E-06	MMSCFD
0.31	SCFHR

Working Losses (lb/yr/tank)	Working Losses (lb/yr)	Breathing Losses (lb/yr/tank)	Breathing Losses (lb/yr)	Working Losses (TPY)	Breathing Losses (TPY)	Total Losses (lb/hr)	Total Losses (TPY)
35	212.49	229.47	1376.80	0.11	0.69	**0.18**	**0.8**

Total Losses = Working Losses + Breathing Losses

Tank Inputs				
Shell Height	20	ft	Max % Fill	97.5%
Shell Diameter	12	ft	Avg % Fill	50.0%
Max Liquid Height	19.5	ft		
Average Liquid Height	10	ft		
Throughput	1,609,650	gal/yr		
Heated	NO			
Shell Color/Shade	Medium Grey		**Site Selection**	
Shell Condition	Good		Cheyenne, WY	
Roof Color/Shade	Medium Grey		**Tank Contents**	
Roof Condition	Good		Light Organics	
Type	Cone			
	0.5	ft		
Slope	0.08	ft/ft		
Vacuum Setting	-0.03	psig		
Pressure Setting	0.25	psig		

- Working losses (lb/yr) and Breathing losses (lb/yr/tank) from Promax output.
  Working Losses are the VOC emissions resulting from hydrocarbon liquid levels rising and falling as fluid enters and leaves the tank, causing the gas blanket to be vented and replaced.
  Breathing Losses are the VOC emissions resulting from the evaporation/weathering of the hydrocarbon liquid during storage.
  Losses (TPY) = Losses (Lb/Yr) * 1 ton/2,000 lb.
  Losses (Lb/Hr) = Losses (TPY) * 2,000 Lb/1 ton * 1 Yr/8,760 Hr

Company Name: **Jonah Energy LLC**
Field Name: **Jonah Field**
Facility Name: **Stud Horse Butte 6-32 Central Facility**

Pneumatic Equipment Emission Calculations

Uncontrolled Pneumatic Equipment Emissions

Reference No.	Component Description	Quantity	Manufacturer	Model	Consumption Rate (scfh)	Hours of Operation	VOC fraction of instrument gas	HAP fraction of instrument gas	VOC Emission (lb/hr)	VOC Emission (TPY)	HAP Emission (lb/hr)	HAP Emission (TPY)
007	Chemical Pump (Methanol, etc.)	0	Varies	5000	50	8760	0.10	0.0036	0.00	0.0	0.00	0.0
007	Double Diaphram Glycol Circulation (Heat Trace)	4	Varies	1040	600	4380	0.10	0.0036	11.91	26.1	0.42	0.9
007	Pneumatic Controllers	9	Varies	6900	6	8760	0.10	0.0036	0.27	1.2	0.01	0.0
									12.18	**27.26**	**0.43**	**0.97**

NOTES: - Pnuematic pump make, model, and consumption rate are estimated
- Pump hours of operation are based on equipment operating for one-half of the year, assumed shut-down during warmer months.
- Pneumatic controller make, model are representative of field equipment; consumption rate is assumed 6 scfh for low bleed, no bleed controllers; high low controller units, liquid level controllers and BTEX pot dumps are included

Controlled Pneumatic Equipment Emissions

Reference No.	Component Description	Quantity	Manufacturer	Model	Consumption Rate (scfh)	Hours of Operation	Quantity Controlled	Control Efficiency	VOC Emission (lb/hr)	VOC Emission (TPY)	HAP Emission (lb/hr)	HAP Emission (TPY)
007	Chemical Pump (Methanol, etc.)	0	Varies	5000	50	8760	0	98%	0.00	0.0	0.00	0.0
007	Double Diaphram Glycol Circulation (Heat Trace)	4	Varies	1040	600	4380	4	98%	0.24	0.5	0.01	0.0
007	Pneumatic Controllers	9	Varies	6900	6	8760	0	0%	0.27	1.2	0.01	0.0
									0.51	**1.70**	**0.02**	**0.06**

Company Name: **Jonah Energy LLC**
Field Name: **Jonah Field**
Facility Name: **Stud Horse Butte 6-32 Central Facility**

Volatile Organic Compound Emission Calculation for Truck Loading

LL= 12.46 * S P M /T

LL = Loading loss (Lb/1,000 gal.), of liquid loaded
S = Saturation factor (from AP-42 Table 5.2-1)
P = True vapor pressure of liquid loaded (psia), (from AP-42 Table 7.1-2)
M = Molecular weight of vapors (Lb/Lb-mole)
T = Temperature of liquid loaded (0R = 460 + 0F)

S= **0.6** (For dedicated Hydrocarbon service)
P= **2.8** True Vapor Pressure (psia) @ T=60 for a RVP=10 fluid
M= **50** Lb/Lb-mole (from composition of vapor phase as per Tanks 4.09)
T= **60** 0F or **520** 0R

LL= 2.0128 Lb/1,000 gal. Loaded

-For a facility making: **38,325** bbl/yr or **105** bbl/day

Uncontrolled Tank Truck Loading Emissions

LL (TPY) = LL (Lb/1,000 gal) * annual production (bbl/yr) * 42 gal/bbl * 1ton/2000Lbs

Truck Loadout Emissions = 1.6 TPY of VOC

LL (lb/hr) = LL (Lb/1,000 gal) * 240 bbl tank truck * 42 gal/bbl * 1 hr loadout duration

Truck Loadout Emissions = 20.29 lb/hr of VOC

Truck Loadout Emissions = 0.06 TPY of HAP

Truck Loadout Emissions = 0.79 lb/hr of HAP

Company Name: **Jonah Energy LLC**
Field Name: **Jonah Field**
Facility Name: **Stud Horse Butte 6-32 Central Facility**

Fugitives Emission Calculation

Equipment Leak Emission Estimates for Oil and Gas Production Operations

Factors are taken from O&G Production Facilities Permitting Guidance

Component Type	Equipment Service Category			
	Gas (lbs/component/day)	Heavy Oil3 (<20 API Gravity) (lbs/component/day)	Light Oil (>20 API Gravity) (lbs/component/day)	Water/Light Oil (lbs/component/day)
Connectors	1.10E-02	4.00E-04	1.10E-02	5.80E-03
Flanges	2.10E-02	2.10E-05	5.80E-03	1.50E-04
Open-ended Lines	1.10E-01	7.40E-03	7.40E-02	1.30E-02
Other1	4.70E-01	1.70E-03	4.00E-01	7.40E-01
Pumps	1.30E-01	Not avaliable	6.90E-01	1.30E-03
Valves	2.40E-01	4.40E-04	1.30E-01	5.20E-03

- All factors are for total organic compound emission rates (includes non-VOC's such as methane and ethane).
1 - "Other" equipment type includes compressors, pressure relief valves, relief valves, diaphrams, drains, dump arms, hatches, instruments, meters, polished rods and vents.
2 - Water/Light Oil factors apply to water streams in oil service with a water content greater than 50% to less than 99%. For streams with water content greater than 99%, the emission rate is considered negligable.
3 - The emission factor for pumps was not derived in the actual protocol, the factor for "other" has been substituted for completeness.

INPUTS:

List the quantity of each type of component in each type of service at the applicant's facility:

Component Type	Equipment Service Category			
	Gas	Heavy Oil (<20 API Gravity)	Light Oil (>20 API Gravity)	Water/Light Oil
Connectors	**2558**	**0**	**830**	**1382**
Flanges	**93**	**0**	**0**	**0**
Open-ended Lines	**18**	**0**	**0**	**0**
Other1	**354**	**0**	**0**	**10**
Pumps	**4**	**0**	**0**	**3**
Valves	**163**	**0**	**53**	**104**

NOTE: The component count is an estimate only.

Sample Calculation:

TOC (TPY) = component quantity * component factor * 365 day/yr * 1 ton/2,000 lb
VOC (TPY) = TOC* Estimated Weight fraction From Permitting Guidance

Component Type	Equipment Service Category			
	Gas (TPY of TOC)	Heavy Oil (<20 API Gravity) (TPY of TOC)	Light Oil (>20 API Gravity) (TPY of TOC)	Water/Light Oil (TPY of TOC)
Connectors	5.14	0.00	1.67	1.46
Flanges	0.36	0.00	0.00	0.00
Open-ended Lines	0.36	0.00	0.00	0.00
Other1	30.36	0.00	0.00	1.35
Pumps	0.09	0.00	0.00	0.00
Valves	7.14	0.00	1.26	0.10
TOTAL	**43.452**	**0.000**	**2.924**	**2.913**
Weight VOC Fraction	0.035	0.030	0.292	0.292
Weight HAP Fraction	0.004	0.025	0.026	0.026
TPY VOC	**1.52**	**0.00**	**0.85**	**0.85**
lb/hr VOC	0.35	0.00	0.19	0.19
TPY HAP	**0.18**	**0.00**	**0.08**	**0.08**
lb/hr HAP	0.04	0.00	0.02	0.02

	Source	VOC		HAP		
		(lb/hr)	(TPY)	(lb/hr)	(TPY)	
009	Fugitives	**0.18**	**0.81**	**0.02**	**0.08**	**75.0% Reduction**

*A 75% reduction in fugutive emissions has been applied due to the Enhanced Directed Inspection & Maintenance (EDI&M) Program.

Company Name:	**Jonah Energy LLC**
Field Name:	**Jonah Field**
Facility Name:	**Stud Horse Butte 6-32 Central Facility**

Wyoming Air Quality Standards and Regulations

Enclosed Flare Emission Analysis Worksheet

(Based on Office of Air Quality Planning and Standards, EPA, AP-42 Manual, Fifth Edition, January 1995, Section 13.5)

Reference No.	Source with vapors sent to the Combustion Chamber	Vapor Volume (SCFD)	Vapor Heating Value (Btu/scf)	H2S Content (%)	NOx (lb/hr)	NOx (TPY)	CO (lb/hr)	CO (TPY)	SO2 (lb/hr)	SO2 (TPY)
	Condensate Tank Vent [1]	17610	1704	0	0.18	0.77	0.04	0.19	0.00	0.00
005	20 MMSCFD Dehydration Unit	1699	2343	0	0.02	0.10	0.01	0.03	0.00	0.00
005	20 MMSCFD Flash Tank	15432	1243	0	0.11	0.49	0.03	0.12	0.00	0.00
007	Double Diaphram Glycol Circulation (Heat Trace)	57600	1112	0	0.37	1.64	0.09	0.41	0.00	0.00
007	Chemical Pump (Methanol, etc.)	0	1112	0	0.00	0.00	0.00	0.00	0.00	0.00
011	Pilot Gas	1200	1112	0	0.01	0.03	0.00	0.01	0.00	0.00
	Total	**93541.2**			**0.69**	**3.0**	**0.17**	**0.8**	**0.00**	**0.0**

NOTES: 1 - Enclosed flare NOx and CO emissions based on continuous operation, using emission factors requested by WDEQ in O&G Production Facilities C6S2 Guidance, Appendix B13.

Reference No.	Source with vapors sent to the Combustion Chamber	Vapor Volume (SCFD)	Vapor Heating Value (Btu/scf)	PM Emission (lb/hr)	PM Emission (TPY)	VOC Emission (lb/hr)	VOC Emission (TPY)	HAP Emission (lb/hr)	HAP Emission (TPY)
011	Pilot Gas	1200	1112.16	0.00	0.00	0.0001	5.2E-04	0.00	0.00

Jonah Field Condensate Composite

Description	Stud Horse Butte 01-29 CF	Cabrito 08-25 CF	Stud Horse Butte 02-28 CF	Stud Horse Butte 15-27	SAG 34-19 CF	Jonah Composite	
Field	Jonah	Jonah	Jonah	Jonah	Jonah		
Analysis Date/Time	07/27/2011	07/27/2011	07/27/2011	07/27/2011	07/27/2011		
Sample Temerature	N/A	67	69	N/A	64	**66.67**	**F**
Sample Pressure	220	250	220	225	250	**233**	**psig**
Date Sampled	7/25/2011	07/26/2011	07/25/2011	07/25/2011	07/26/2011		
Componet	**Mol%**	**Mol%**	**Mol%**	**Mol%**	**Mol%**	**Mol%**	
Methane	6.5398	7.2487	19.9695	6.3631	6.1012	**9.2445**	
Ethane	2.8830	3.2441	3.1402	2.7213	3.2709	**3.0519**	
Propane	3.2394	4.0447	2.6308	3.1956	4.5623	**3.5346**	
Isobutane	1.7487	2.2678	1.3451	1.7447	2.4600	**1.9133**	
n-Butane	2.8063	3.7852	2.1382	2.7343	4.0488	**3.1026**	
Neopentane	0.0384	0.0498	0.0000	0.0296	0.0434	**0.0322**	
Isopentane	2.6121	3.1645	2.3392	2.6150	3.4832	**2.8428**	
n-Pentane	2.6610	3.2181	2.1999	2.6119	3.5662	**2.8514**	
2,2-Dimethylbutane	0.2030	0.2055	0.1622	0.1899	0.1965	**0.1914**	
2,3-Dimethylbutane	0.7150	0.7912	0.5361	0.7268	0.7983	**0.7135**	
2-Methylpentane	1.9322	2.1455	1.6170	1.9161	2.1129	**1.9447**	
3-Methylpentane	1.1840	1.2842	0.9742	1.1768	1.2589	**1.1756**	
n-Hexane	3.2065	3.4524	2.6654	3.1975	3.4286	**3.1901**	
Heptanes	21.9287	21.0746	19.5222	22.6729	19.6267	**20.9650**	
Octanes	16.1150	15.2336	14.7932	17.9609	13.5603	**15.5326**	
Nonanes	12.1312	11.1473	11.1167	13.3825	10.1436	**11.5843**	
Decanes plus	19.9385	17.4769	14.6206	16.6056	21.1714	**17.9626**	
Nitrogen	0.0083	0.0091	0.0156	0.0219	0.0000	**0.0110**	
Carbon Dioxide	0.1086	0.1571	0.2139	0.1336	0.1662	**0.1559**	
Total	99.9997	100.0003	100.0000	100.0000	99.9994	99.9999	
Componet							
Benzene	1.2441	1.3412	1.1014	1.3471	1.0541	**1.2176**	
Toluene	4.6147	4.8111	4.4587	5.7550	3.9889	**4.7257**	
Ethylbenzene	0.4788	0.4700	0.4461	0.5557	0.4128	**0.4727**	
M&P Xylene	4.0059	3.7155	3.7671	4.7846	3.4306	**3.9407**	
O-Xylene	0.7322	0.7187	0.6751	0.8526	0.6757	**0.7309**	
2,2,4-Trimethylpentane	1.5487	1.5344	1.3710	1.6230	1.4294	**1.5013**	

GRI E&P TANK INFORMATION						
Component	**Mol%**	**Mol%**	**Mol%**	**Mol%**	**Mol%**	**Mol%**
H2S	0.0000	0.0000	0.0000	0.0000	0.0000	**0.0000**
O2	0.0000	0.0000	0.0000	0.0000	0.0000	**0.0000**
CO2	0.1086	0.1571	0.2139	0.1336	0.1662	**0.1559**
N2	0.0083	0.0091	0.0156	0.0219	0.0000	**0.0110**
C1	6.5398	7.2487	19.9695	6.3631	6.1012	**9.2445**
C2	2.8830	3.2441	3.1402	2.7213	3.2709	**3.0519**
C3	3.2394	4.0447	2.6308	3.1956	4.5623	**3.5346**
IC4	1.7487	2.2678	1.3451	1.7447	2.4600	**1.9133**
NC4	2.8063	3.7852	2.1382	2.7343	4.0488	**3.1026**
IC5	2.6505	3.2143	2.3392	2.6446	3.5266	**2.8750**
NC5	2.6610	3.2181	2.1999	2.6119	3.5662	**2.8514**
Hexanes	4.0342	4.4264	3.2895	4.0096	4.3666	**4.0253**
Heptanes	20.6846	19.7334	18.4208	21.3258	18.5726	**19.7474**
Octanes	9.9516	8.8881	8.9635	10.5829	8.1420	**9.3056**
Nonanes	6.9143	6.2431	6.2284	7.1896	5.6245	**6.4400**
Benzene	1.2441	1.3412	1.1014	1.3471	1.0541	**1.2176**
Toluene	4.6147	4.8111	4.4587	5.7550	3.9889	**4.7257**
E-Benzene	0.4788	0.4700	0.4461	0.5557	0.4128	**0.4727**
Xylene	4.7381	4.4342	4.4422	5.6372	4.1063	**4.6716**
n-C6	3.2065	3.4524	2.6654	3.1975	3.4286	**3.1901**
2,2,4-Trimethylpentane	1.5487	1.5344	1.3710	1.6230	1.4294	**1.5013**
C10 Plus						
C10 Mole %	19.9385	17.4769	14.6206	16.6056	21.1714	**17.9626**
Total	99.9997	100.0003	100.0000	100.0000	99.9994	99.9999

* Individual contributing analysis available upon request.

Jonah Field Wet Gas Composite

Description	Stud Horse Butte 01-29 CF	Cabrito 08-25 CF	Stud Horse Butte 2-28 CF	Stud Horse Butte 15-27 CF	SAG 34-19 CF	Jonah Composite	
Field	Jonah	Jonah	Jonah	Jonah	Jonah		
Analysis Date/Time	07/28/2011	07/27/2011	07/27/2011	07/27/2011	07/27/2011		
Sample Temerature	N/A	67	69	68	64	**67.00**	**F**
Sample Pressure	200	250	220	225	240	**227**	**psig**
Date Sampled	7/25/2011	07/26/2011	07/25/2011	07/25/2011	07/26/2011		
Componet	**Mol%**	**Mol%**	**Mol%**	**Mol%**	**Mol%**	**Mol%**	
Methane	91.2359	89.3437	90.9345	90.3932	88.7667	**90.1348**	
Ethane	5.1393	5.8672	5.1822	5.3779	5.9286	**5.4990**	
Propane	1.6661	2.1827	1.6989	1.8852	2.4219	**1.9710**	
Isobutane	0.3732	0.4991	0.3888	0.4326	0.5478	**0.4483**	
n-Butane	0.3723	0.5010	0.3879	0.4282	0.5677	**0.4514**	
Neopentane	0.0081	0.0127	0.0096	0.0080	0.0076	**0.0092**	
Isopentane	0.1452	0.1895	0.1573	0.1695	0.2038	**0.1731**	
n-Pentane	0.1072	0.1397	0.1167	0.1235	0.1513	**0.1277**	
2,2-Dimethylbutane	0.0055	0.0062	0.0061	0.0060	0.0057	**0.0059**	
2,3-Dimethylbutane	0.0131	0.0170	0.0144	0.0151	0.0159	**0.0151**	
2-Methylpentane	0.0336	0.0434	0.0376	0.0382	0.0392	**0.0384**	
3-Methylpentane	0.0183	0.0234	0.0204	0.0207	0.0208	**0.0207**	
n-Hexane	0.0387	0.0500	0.0439	0.0454	0.0437	**0.0443**	
Heptanes	0.1192	0.1352	0.1334	0.1560	0.1132	**0.1314**	
Octanes	0.0092	0.0089	0.0097	0.0119	0.0072	**0.0094**	
Nonanes	0.0031	0.0032	0.0038	0.0048	0.0028	**0.0035**	
Decanes plus	0.0001	0.0002	0.0004	0.0003	0.0001	**0.0002**	
Nitrogen	0.202	0.2156	0.2811	0.2054	0.3469	**0.2502**	
Carbon Dioxide	0.5099	0.7613	0.5733	0.6781	0.8091	**0.6663**	
Oxygen	0.0000	0.0000	0.0000	0.0000	0.0000	**0.0000**	
Hydrogen Sulfide	0.0000	0.0000	0.0000	0.0000	0.0000	**0.0000**	
Total	100.0000	100.0000	100.0000	100.0000	100.0000	100.0000	
Componet							
Benzene	0.0117	0.0154	0.0145	0.0154	0.0102	**0.0134**	
Toluene	0.0109	0.0132	0.0132	0.0169	0.0104	**0.0129**	
Ethylbenzene	0.0002	0.0002	0.0003	0.0003	0.0002	**0.0002**	
M&P Xylene	0.0014	0.0015	0.0017	0.0023	0.0014	**0.0017**	
O-Xylene	0.0002	0.0002	0.0003	0.0003	0.0002	**0.0002**	
2,2,4-Trimethylpentane	0.0031	0.0038	0.0037	0.0041	0.0033	**0.0036**	
Cyclopentane	0.0000	0.0000	0.0000	0.0000	0.0000	**0.0000**	
Cyclohexane	0.0231	0.0281	0.0273	0.0290	0.0241	**0.0263**	
Methylcyclohexane	0.0295	0.0322	0.0336	0.0377	0.0286	**0.0323**	

GRI GlyCalc Information

Componet	**Mol%**	**Mol%**	**Mol%**	**Mol%**	**Mol%**	**Mol%**
Carbon Dioxide	0.5099	0.7613	0.5733	0.6781	0.8091	**0.6663**
Hydrogen Sulfide	0.0000	0.0000	0.0000	0.0000	0.0000	**0.0000**
Nitrogen	0.2020	0.2156	0.2811	0.2054	0.3469	**0.2502**
Methane	91.2359	89.3437	90.9345	90.3932	88.7667	**90.1348**
Ethane	5.1393	5.8672	5.1822	5.3779	5.9286	**5.4990**
Propane	1.6661	2.1827	1.6989	1.8852	2.4219	**1.9710**
Isobutane	0.3732	0.4991	0.3888	0.4326	0.5478	**0.4483**
n-Butane	0.3723	0.5010	0.3879	0.4282	0.5677	**0.4514**
Isopentane	0.1533	0.2022	0.1669	0.1775	0.2114	**0.1823**
n-Pentane	0.1072	0.1397	0.1167	0.1235	0.1513	**0.1277**
Cyclopentane	0.0000	0.0000	0.0000	0.0000	0.0000	**0.0000**
n-Hexane	0.0387	0.0500	0.0439	0.0454	0.0437	**0.0443**
Cyclohexane	0.0231	0.0281	0.0273	0.0290	0.0241	**0.0263**
Other Hexanes	0.0705	0.0900	0.0785	0.0800	0.0816	**0.0801**
Heptanes	0.0409	0.0425	0.0411	0.0529	0.0366	**0.0428**
Methylcyclohexane	0.0295	0.0322	0.0336	0.0377	0.0286	**0.0323**
2,2,4 Trimethylpentane	0.0031	0.0038	0.0037	0.0041	0.0033	**0.0036**
Benzene	0.0117	0.0154	0.0145	0.0154	0.0102	**0.0134**
Toluene	0.0109	0.0132	0.0132	0.0169	0.0104	**0.0129**
Ethylbenzene	0.0002	0.0002	0.0003	0.0003	0.0002	**0.0002**
Xylenes	0.0016	0.0017	0.0020	0.0026	0.0016	**0.0019**
C8+ Heavies	0.0106	0.0104	0.0116	0.0141	0.0083	**0.0110**
Oxygen	0.0000	0.0000	0.0000	0.0000	0.0000	**0.0000**
Total	100.0000	100.0000	100.0000	100.0000	100.0000	100.0000

* Individual contributing analysis available upon request.

Bryan Research & Engineering, Inc.

ProMax® 3.2

with

TSWEET® & PROSIM®

Copyright © BRE Group, Ltd. 2002-2013. All Rights Reserved.

Simulation Report

Project: EHS MODELS.PMX

Licensed to Jonah Energy LLC and Affiliates

Client Name: Jonah Energy LLC
Location: SHB 6-32 CDP
Job:

ProMax Filename: S:\NORTH_ROCKIES\JONAH\OPERATIONS\FACILITIES\MODELING\EHS MODELS\EHS MODELS.PMX
ProMax Version: 3.2.13330.0
Simulation Initiated: 5/20/2015 4:31:05 PM

Bryan Research & Engineering, Inc.
Chemical Engineering Consultants
P.O. Box 4747 Bryan, Texas 77805
Office: (979) 776-5220
FAX: (979) 776-4818
mailto:sales@bre.com
http://www.bre.com/

Report Navigator can be activated via the ProMax Navigator Toolbar.
An asterisk (*), throughout the report, denotes a user specified value.
A question mark (?) after a value, throughout the report, denotes an extrapolated or approximate value.

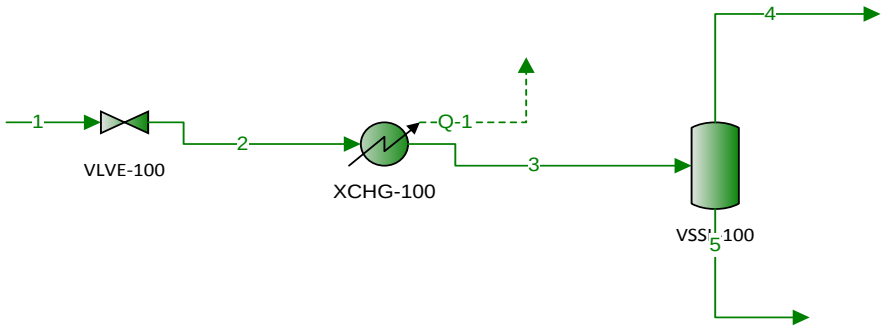

Tank Working and BreathingTank loss calculations for "3".

Process Streams		1	2	3	4	5
Composition	**Status:**	**Solved**	**Solved**	**Solved**	**Solved**	**Solved**
Phase: **Total**	**From Block:**	**--**	**VLVE-100**	**XCHG-100**	**VSSL-100**	**VSSL-100**
	To Block:	**VLVE-100**	**XCHG-100**	**VSSL-100**	**--**	**--**
Mole Fraction		**%**	**%**	**%**	**%**	**%**
Methane		9.24447*	9.24447	9.24447	56.3340	0.259520
Ethane		3.05190*	3.05190	3.05190	16.1477	0.553149
Propane		3.53456*	3.53456	3.53456	12.6759	1.79034
i-Butane		1.91326*	1.91326	1.91326	3.86092	1.54164
n-Butane		3.10256*	3.10256	3.10256	4.71506	2.79489
Propane, 2,2-Dimethyl-		0.0322400*	0.0322400	0.0322400	0.0375030	0.0312358
i-Pentane		2.84280*	2.84280	2.84280	1.78930	3.04382
n-Pentane		2.85142*	2.85142	2.85142	1.32385	3.14289
Butane, 2,2-Dimethyl-		0.191420*	0.191420	0.191420	0.0546911	0.217509
Butane, 2,3-Dimethyl-		0.713481*	0.713481	0.713481	0.146545	0.821655
Pentane, 2-Methyl-		1.94474*	1.94474	1.94474	0.352956	2.24846
Pentane, 3-Methyl-		1.17562*	1.17562	1.17562	0.189946	1.36369
n-Hexane		1.97250*	1.97250	1.97250	0.248970	2.30136
n-Heptane		16.2394*	16.2394	16.2394	0.611357	19.2213
n-Octane		8.88703*	8.88703	8.88703	0.0923424	10.5651
n-Nonane		11.5843*	11.5843	11.5843	0.0348182	13.7880
n-Decane		17.9626*	17.9626	17.9626	0.0156687	21.3870
Nitrogen		0.0109800*	0.0109800	0.0109800	0.0680902	8.30633E-05
CO2		0.155880*	0.155880	0.155880	0.902698	0.0133832
Benzene		1.21758*	1.21758	1.21758	0.146717	1.42191
Toluene		4.72569*	4.72569	4.72569	0.150318	5.59869
Ethylbenzene		0.472681*	0.472681	0.472681	0.00414933	0.562079
m-Xylene		3.94074*	3.94074	3.94074	0.0282300	4.68727
o-Xylene		0.730861*	0.730861	0.730861	0.00469261	0.869418
Pentane, 2,2,4-Trimethyl-		1.50130*	1.50130	1.50130	0.0635236	1.77564
Molar Flow		**lbmol/h**	**lbmol/h**	**lbmol/h**	**lbmol/h**	**lbmol/h**
Methane		1.11506*	1.11506	1.11506	1.08878	0.0262873
Ethane		0.368119*	0.368119	0.368119	0.312089	0.0560298
Propane		0.426337*	0.426337	0.426337	0.244989	0.181348
i-Butane		0.230777*	0.230777	0.230777	0.0746205	0.156156
n-Butane		0.374230*	0.374230	0.374230	0.0911287	0.283101
Propane, 2,2-Dimethyl-		0.00388878*	0.00388878	0.00388878	0.000724825	0.00316395
i-Pentane		0.342897*	0.342897	0.342897	0.0345820	0.308315
n-Pentane		0.343937*	0.343937	0.343937	0.0255863	0.318351
Butane, 2,2-Dimethyl-		0.0230890*	0.0230890	0.0230890	0.00105702	0.0220320
Butane, 2,3-Dimethyl-		0.0860597*	0.0860597	0.0860597	0.00283230	0.0832274
Pentane, 2-Methyl-		0.234574*	0.234574	0.234574	0.00682163	0.227752
Pentane, 3-Methyl-		0.141803*	0.141803	0.141803	0.00367111	0.138132
n-Hexane		0.237922*	0.237922	0.237922	0.00481188	0.233110
n-Heptane		1.95878*	1.95878	1.95878	0.0118158	1.94697
n-Octane		1.07195*	1.07195	1.07195	0.00178471	1.07016
n-Nonane		1.39729*	1.39729	1.39729	0.000672936	1.39662
n-Decane		2.16664*	2.16664	2.16664	0.000302831	2.16634
Nitrogen		0.00132440*	0.00132440	0.00132440	0.00131599	8.41368E-06
CO2		0.0188022*	0.0188022	0.0188022	0.0174466	0.00135561
Benzene		0.146864*	0.146864	0.146864	0.00283562	0.144028
Toluene		0.570010*	0.570010	0.570010	0.00290522	0.567104
Ethylbenzene		0.0570145*	0.0570145	0.0570145	8.01948E-05	0.0569343
m-Xylene		0.475331*	0.475331	0.475331	0.000545606	0.474785
o-Xylene		0.0881561*	0.0881561	0.0881561	9.06947E-05	0.0880654
Pentane, 2,2,4-Trimethyl-		0.181086*	0.181086	0.181086	0.00122773	0.179858

Mass Fraction	%	%	%	%	%
Methane	1.55184*	1.55184	1.55184	30.9899	0.0384650
Ethane	0.960249*	0.960249	0.960249	16.6498	0.153669
Propane	1.63089*	1.63089	1.63089	19.1670	0.729384
i-Butane	1.16362*	1.16362	1.16362	7.69505	0.827845
n-Butane	1.88693*	1.88693	1.88693	9.39741	1.50083
Propane, 2,2-Dimethyl-	0.0243399*	0.0243399	0.0243399	0.0927841	0.0208212
i-Pentane	2.14620*	2.14620	2.14620	4.42680	2.02895
n-Pentane	2.15270*	2.15270	2.15270	3.27528	2.09499
Butane, 2,2-Dimethyl-	0.172609*	0.172609	0.172609	0.161614	0.173175
Butane, 2,3-Dimethyl-	0.643367*	0.643367	0.643367	0.433045	0.654180
Pentane, 2-Methyl-	1.75363*	1.75363	1.75363	1.04299	1.79017
Pentane, 3-Methyl-	1.06009*	1.06009	1.06009	0.561296	1.08574
n-Hexane	1.77866*	1.77866	1.77866	0.735714	1.83228
n-Heptane	17.0270*	17.0270	17.0270	2.10063	17.7944
n-Octane	10.6225*	10.6225	10.6225	0.361705	11.1499
n-Nonane	15.5467*	15.5467	15.5467	0.153130	16.3380
n-Decane	26.7431*	26.7431	26.7431	0.0764469	28.1140
Nitrogen	0.00321856*	0.00321856	0.00321856	0.0654078	2.14981E-05
CO2	0.0717845*	0.0717845	0.0717845	1.36228	0.00544164
Benzene	0.995195*	0.995195	0.995195	0.392986	1.02615
Toluene	4.55616*	4.55616	4.55616	0.474932	4.76597
Ethylbenzene	0.525101*	0.525101	0.525101	0.0151056	0.551319
m-Xylene	4.37777*	4.37777	4.37777	0.102771	4.59754
o-Xylene	0.811913*	0.811913	0.811913	0.0170834	0.852774
Pentane, 2,2,4-Trimethyl-	1.79447*	1.79447	1.79447	0.248822	1.87393
Mass Flow	**lb/h**	**lb/h**	**lb/h**	**lb/h**	**lb/h**
Methane	17.8884*	17.8884	17.8884	17.4666	0.421714
Ethane	11.0690*	11.0690	11.0690	9.38422	1.68476
Propane	18.7996*	18.7996	18.7996	10.8030	7.99665
i-Butane	13.4132*	13.4132	13.4132	4.33711	9.07614
n-Butane	21.7510*	21.7510	21.7510	5.29660	16.4544
Propane, 2,2-Dimethyl-	0.280570*	0.280570	0.280570	0.0522953	0.228275
i-Pentane	24.7396*	24.7396	24.7396	2.49505	22.2446
n-Pentane	24.8146*	24.8146	24.8146	1.84602	22.9686
Butane, 2,2-Dimethyl-	1.98970*	1.98970	1.98970	0.0910893	1.89861
Butane, 2,3-Dimethyl-	7.41622*	7.41622	7.41622	0.244074	7.17215
Pentane, 2-Methyl-	20.2145*	20.2145	20.2145	0.587856	19.6266
Pentane, 3-Methyl-	12.2199*	12.2199	12.2199	0.316359	11.9036
n-Hexane	20.5030*	20.5030	20.5030	0.414665	20.0884
n-Heptane	196.274*	196.274	196.274	1.18396	195.090
n-Octane	122.447*	122.447	122.447	0.203865	122.243
n-Nonane	179.209*	179.209	179.209	0.0863075	179.123
n-Decane	308.273*	308.273	308.273	0.0430873	308.230
Nitrogen	0.0371010*	0.0371010	0.0371010	0.0368653	0.000235696
CO2	0.827475*	0.827475	0.827475	0.767815	0.0596598
Benzene	11.4718*	11.4718	11.4718	0.221496	11.2503
Toluene	52.5198*	52.5198	52.5198	0.267683	52.2521
Ethylbenzene	6.05294*	6.05294	6.05294	0.00851388	6.04443
m-Xylene	50.4635*	50.4635	50.4635	0.0579242	50.4055
o-Xylene	9.35909*	9.35909	9.35909	0.00962860	9.34946
Pentane, 2,2,4-Trimethyl-	20.6852*	20.6852	20.6852	0.140242	20.5450

Process Streams		1	2	3	4	5
Properties	**Status:**	**Solved**	**Solved**	**Solved**	**Solved**	**Solved**
Phase: Total	**From Block:**	**--**	**VLVE-100**	**XCHG-100**	**VSSL-100**	**VSSL-100**
	To Block:	**VLVE-100**	**XCHG-100**	**VSSL-100**	**--**	**--**
Property	**Units**					
Temperature	°F	66.67*	52.7562	45*	45	45
Pressure	psia	239*	12*	12	12	12
Mole Fraction Vapor	%	2.47395	16.6161	16.0232	100	0
Mole Fraction Light Liquid	%	97.5261	83.3839	83.9768	0	100
Mole Fraction Heavy Liquid	%	0	0	0	0	0
Molecular Weight	lb/lbmol	95.5667	95.5667	95.5667	29.1623	108.237
Mass Density	lb/ft^3	35.1545	1.23139	1.29458	0.0650625	45.4133
Molar Flow	lbmol/h	12.0619	12.0619	12.0619	1.93271	10.1292
Mass Flow	lb/h	1152.72	1152.72	1152.72	56.3623	1096.36
Vapor Volumetric Flow	ft^3/h	32.7901	936.113	890.421	866.280	24.1418
Liquid Volumetric Flow	gpm	4.08812	116.710	111.014	108.004	3.00988
Std Vapor Volumetric Flow	MMSCFD	0.109856	0.109856	0.109856	0.0176024	0.0922533
Std Liquid Volumetric Flow	sgpm	3.33474	3.33474	3.33474	0.272236	3.0625*
Compressibility		0.115025	0.169355	0.163564	0.993116	0.00528083
Specific Gravity					1.00689	0.728139
API Gravity						64.7227
Enthalpy	Btu/h	-1.00311E+06	-1.00311E+06	-1.00800E+06	-76755.9	-931245
Mass Enthalpy	Btu/lb	-870.211	-870.211	-874.454	-1361.83	-849.398
Mass Cp	Btu/(lb*°F)	0.490087	0.472134	0.468229	0.424949	0.470454
Ideal Gas CpCv Ratio		1.05850	1.05984	1.06060	1.19188	1.05361
Dynamic Viscosity	cP				0.00919046	0.615177
Kinematic Viscosity	cSt				8.81831	0.845660
Thermal Conductivity	Btu/(h*ft*°F)				0.0136347	0.0753305
Surface Tension	lbf/ft					0.00159619
Net Ideal Gas Heating Value	Btu/ft^3	4816.41	4816.41	4816.41	1542.41	5441.10
Net Liquid Heating Value	Btu/lb	18968.1	18968.1	18968.1	19964.1	18916.9
Gross Ideal Gas Heating Value	Btu/ft^3	5182.77	5182.77	5182.77	1687.53	5849.69
Gross Liquid Heating Value	Btu/lb	20422.9	20422.9	20422.9	21852.5	20349.4

Process Streams		1	2	3	4	5
Composition	**Status:**	**Solved**	**Solved**	**Solved**	**Solved**	**Solved**
Phase: Vapor	**From Block:**	**--**	**VLVE-100**	**XCHG-100**	**VSSL-100**	**VSSL-100**
	To Block:	**VLVE-100**	**XCHG-100**	**VSSL-100**	**--**	**--**
Mole Fraction		**%**	**%**	**%**	**%**	
Methane		89.2610	54.4207	56.3340	56.3340	
Ethane		6.15061	15.8481	16.1477	16.1477	
Propane		2.11509	13.0156	12.6759	12.6759	
i-Butane		0.463446	4.18333	3.86092	3.86092	
n-Butane		0.529309	5.22200	4.71506	4.71506	
Propane, 2,2-Dimethyl-		0.00409994	0.0421505	0.0375030	0.0375030	
i-Pentane		0.194433	2.08045	1.78930	1.78930	
n-Pentane		0.144556	1.56166	1.32385	1.32385	
Butane, 2,2-Dimethyl-		0.00606461	0.0654375	0.0546911	0.0546911	
Butane, 2,3-Dimethyl-		0.0166838	0.177432	0.146545	0.146545	
Pentane, 2-Methyl-		0.0410032	0.430161	0.352956	0.352956	
Pentane, 3-Methyl-		0.0222021	0.232237	0.189946	0.189946	
n-Hexane		0.0300442	0.307190	0.248970	0.248970	
n-Heptane		0.0852452	0.779250	0.611357	0.611357	
n-Octane		0.0150506	0.121581	0.0923424	0.0923424	
n-Nonane		0.00658469	0.0472756	0.0348182	0.0348182	
n-Decane		0.00352277	0.0219040	0.0156687	0.0156687	
Nitrogen		0.226820	0.0656828	0.0680902	0.0680902	
CO2		0.632406	0.876995	0.902698	0.902698	
Benzene		0.0170393	0.180361	0.146717	0.146717	
Toluene		0.0201169	0.191298	0.150318	0.150318	
Ethylbenzene		0.000652557	0.00545093	0.00414933	0.00414933	
m-Xylene		0.00456842	0.0373363	0.0282300	0.0282300	
o-Xylene		0.000761667	0.00621303	0.00469261	0.00469261	
Pentane, 2,2,4-Trimethyl-		0.00864879	0.0801930	0.0635236	0.0635236	

Molar Flow	lbmol/h	lbmol/h	lbmol/h	lbmol/h
Methane	0.266360	1.09071	1.08878	1.08878
Ethane	0.0183538	0.317631	0.312089	0.312089
Propane	0.00631156	0.260862	0.244989	0.244989
i-Butane	0.00138295	0.0838433	0.0746205	0.0746205
n-Butane	0.00157949	0.104661	0.0911287	0.0911287
Propane, 2,2-Dimethyl-	1.22345E-05	0.000844789	0.000724825	0.000724825
i-Pentane	0.000580200	0.0416967	0.0345820	0.0345820
n-Pentane	0.000431364	0.0312991	0.0255863	0.0255863
Butane, 2,2-Dimethyl-	1.80972E-05	0.00131151	0.00105702	0.00105702
Butane, 2,3-Dimethyl-	4.97854E-05	0.00355613	0.00283230	0.00283230
Pentane, 2-Methyl-	0.000122356	0.00862137	0.00682163	0.00682163
Pentane, 3-Methyl-	6.62524E-05	0.00465455	0.00367111	0.00367111
n-Hexane	8.96536E-05	0.00615676	0.00481188	0.00481188
n-Heptane	0.000254377	0.0156179	0.0118158	0.0118158
n-Octane	4.49118E-05	0.00243676	0.00178471	0.00178471
n-Nonane	1.96491E-05	0.000947507	0.000672936	0.000672936
n-Decane	1.05122E-05	0.000439005	0.000302831	0.000302831
Nitrogen	0.000676846	0.00131643	0.00131599	0.00131599
CO2	0.00188714	0.0175769	0.0174466	0.0174466
Benzene	5.08462E-05	0.00361484	0.00283562	0.00283562
Toluene	6.00302E-05	0.00383403	0.00290522	0.00290522
Ethylbenzene	1.94727E-06	0.000109249	8.01948E-05	8.01948E-05
m-Xylene	1.36324E-05	0.000748302	0.000545606	0.000545606
o-Xylene	2.27286E-06	0.000124523	9.06947E-05	9.06947E-05
Pentane, 2,2,4-Trimethyl-	2.58085E-05	0.00160725	0.00122773	0.00122773
Mass Fraction	**%**	**%**	**%**	**%**
Methane	77.2688	28.8310	30.9899	30.9899
Ethane	9.97951	15.7370	16.6498	16.6498
Propane	5.03264	18.9533	19.1670	19.1670
i-Butane	1.45349	8.02952	7.69505	7.69505
n-Butane	1.66006	10.0232	9.39741	9.39741
Propane, 2,2-Dimethyl-	0.0159616	0.100429	0.0927841	0.0927841
i-Pentane	0.756956	4.95691	4.42680	4.42680
n-Pentane	0.562778	3.72083	3.27528	3.27528
Butane, 2,2-Dimethyl-	0.0282006	0.186224	0.161614	0.161614
Butane, 2,3-Dimethyl-	0.0775799	0.504941	0.433045	0.433045
Pentane, 2-Methyl-	0.190665	1.22416	1.04299	1.04299
Pentane, 3-Methyl-	0.103240	0.660907	0.561296	0.561296
n-Hexane	0.139706	0.874209	0.735714	0.735714
n-Heptane	0.460912	2.57857	2.10063	2.10063
n-Octane	0.0927682	0.458634	0.361705	0.361705
n-Nonane	0.0455703	0.200234	0.153130	0.153130
n-Decane	0.0270461	0.102920	0.0764469	0.0764469
Nitrogen	0.342862	0.0607635	0.0654078	0.0654078
CO2	1.50181	1.27458	1.36228	1.36228
Benzene	0.0718190	0.465249	0.392986	0.392986
Toluene	0.100017	0.582070	0.474932	0.474932
Ethylbenzene	0.00373828	0.0191107	0.0151056	0.0151056
m-Xylene	0.0261709	0.130899	0.102771	0.102771
o-Xylene	0.00436333	0.0217826	0.0170834	0.0170834
Pentane, 2,2,4-Trimethyl-	0.0533091	0.302508	0.248822	0.248822

Mass Flow	lb/h	lb/h	lb/h	lb/h
Methane	4.27307	17.4977	17.4666	17.4666
Ethane	0.551881	9.55087	9.38422	9.38422
Propane	0.278312	11.5029	10.8030	10.8030
i-Butane	0.0803800	4.87315	4.33711	4.33711
n-Butane	0.0918034	6.08310	5.29660	5.29660
Propane, 2,2-Dimethyl-	0.000882701	0.0609505	0.0522953	0.0522953
i-Pentane	0.0418607	3.00837	2.49505	2.49505
n-Pentane	0.0311224	2.25819	1.84602	1.84602
Butane, 2,2-Dimethyl-	0.00155953	0.113020	0.0910893	0.0910893
Butane, 2,3-Dimethyl-	0.00429028	0.306451	0.244074	0.244074
Pentane, 2-Methyl-	0.0105441	0.742950	0.587856	0.587856
Pentane, 3-Methyl-	0.00570933	0.401107	0.316359	0.316359
n-Hexane	0.00772593	0.530561	0.414665	0.414665
n-Heptane	0.0254890	1.56494	1.18396	1.18396
n-Octane	0.00513021	0.278347	0.203865	0.203865
n-Nonane	0.00252010	0.121523	0.0863075	0.0863075
n-Decane	0.00149569	0.0624624	0.0430873	0.0430873
Nitrogen	0.0189607	0.0368776	0.0368653	0.0368653
CO2	0.0830520	0.773551	0.767815	0.767815
Benzene	0.00397169	0.282362	0.221496	0.221496
Toluene	0.00553108	0.353261	0.267683	0.267683
Ethylbenzene	0.000206732	0.0115984	0.00851388	0.00851388
m-Xylene	0.00144729	0.0794435	0.0579242	0.0579242
o-Xylene	0.000241298	0.0132200	0.00962860	0.00962860
Pentane, 2,2,4-Trimethyl-	0.00294807	0.183593	0.140242	0.140242

Process Streams		1	2	3	4	5
Properties	**Status:**	Solved	Solved	Solved	Solved	Solved
Phase: Vapor	**From Block:**	--	VLVE-100	XCHG-100	VSSL-100	VSSL-100
	To Block:	VLVE-100	XCHG-100	VSSL-100	--	--
Property	**Units**					
Temperature	°F	66.67	52.7562	45	45	
Pressure	psia	239	12	12	12	
Mole Fraction Vapor	%	100	100	100	100	
Mole Fraction Light Liquid	%	0	0	0	0	
Mole Fraction Heavy Liquid	%	0	0	0	0	
Molecular Weight	lb/lbmol	18.5323	30.2813	29.1623	29.1623	
Mass Density	lb/ft^3	0.824142	0.0665493	0.0650625	0.0650625	
Molar Flow	lbmol/h	0.298406	2.00422	1.93271	1.93271	
Mass Flow	lb/h	5.53014	60.6904	56.3623	56.3623	
Vapor Volumetric Flow	ft^3/h	6.71018	911.962	866.280	866.280	
Liquid Volumetric Flow	gpm	0.836593	113.699	108.004	108.004	
Std Vapor Volumetric Flow	MMSCFD	0.00271777	0.0182537	0.0176024	0.0176024	
Std Liquid Volumetric Flow	sgpm	0.0339900	0.287041	0.272236	0.272236	
Compressibility		0.951467	0.992926	0.993116	0.993116	
Specific Gravity		0.639869	1.04553	1.00689	1.00689	
API Gravity						
Enthalpy	Btu/h	-10173.5	-80488.5	-76755.9	-76755.9	
Mass Enthalpy	Btu/lb	-1839.65	-1326.21	-1361.83	-1361.83	
Mass Cp	Btu/(lb*°F)	0.524888	0.425256	0.424949	0.424949	
Ideal Gas CpCv Ratio		1.27615	1.18333	1.19188	1.19188	
Dynamic Viscosity	cP	0.0110064	0.00921953	0.00919046	0.00919046	
Kinematic Viscosity	cSt	0.833723	8.64857	8.81831	8.81831	
Thermal Conductivity	Btu/(h*ft*°F)	0.0187289	0.0136761	0.0136347	0.0136347	
Surface Tension	lbf/ft					
Net Ideal Gas Heating Value	Btu/ft^3	1016.09	1598.39	1542.41	1542.41	
Net Liquid Heating Value	Btu/lb	20773.1	19920.3	19964.1	19964.1	
Gross Ideal Gas Heating Value	Btu/ft^3	1123.94	1747.43	1687.53	1687.53	
Gross Liquid Heating Value	Btu/lb	22981.4	21788.1	21852.5	21852.5	

Process Streams		1	2	3	4	5
Composition	**Status:**	**Solved**	**Solved**	**Solved**	**Solved**	**Solved**
Phase: Light Liquid	**From Block:**	**--**	**VLVE-100**	**XCHG-100**	**VSSL-100**	**VSSL-100**
	To Block:	**VLVE-100**	**XCHG-100**	**VSSL-100**	**--**	**--**
Mole Fraction		**%**	**%**	**%**		**%**
Methane		7.21469	0.242128	0.259520		0.259520
Ethane		2.97330	0.501979	0.553149		0.553149
Propane		3.57057	1.64526	1.79034		1.79034
i-Butane		1.95004	1.46090	1.54164		1.54164
n-Butane		3.16784	2.68022	2.79489		2.79489
Propane, 2,2-Dimethyl-		0.0329539	0.0302652	0.0312358		0.0312358
i-Pentane		2.90998	2.99472	3.04382		3.04382
n-Pentane		2.92009	3.10844	3.14289		3.14289
Butane, 2,2-Dimethyl-		0.196122	0.216525	0.217509		0.217509
Butane, 2,3-Dimethyl-		0.731157	0.820300	0.821655		0.821655
Pentane, 2-Methyl-		1.99303	2.24656	2.24846		2.24846
Pentane, 3-Methyl-		1.20488	1.36361	1.36369		1.36369
n-Hexane		2.02178	2.30435	2.30136		2.30136
n-Heptane		16.6491	19.3201	19.2213		19.2213
n-Octane		9.11209	10.6337	10.5651		10.5651
n-Nonane		11.8780	13.8833	13.7880		13.7880
n-Decane		18.4182	21.5377	21.3870		21.3870
Nitrogen		0.00550479	7.92955E-05	8.30633E-05		8.30633E-05
CO2		0.143792	0.0121824	0.0133832		0.0133832
Benzene		1.24804	1.42427	1.42191		1.42191
Toluene		4.84505	5.62926	5.59869		5.59869
Ethylbenzene		0.484655	0.565786	0.562079		0.562079
m-Xylene		4.04059	4.71858	4.68727		4.68727
o-Xylene		0.749381	0.875263	0.869418		0.869418
Pentane, 2,2,4-Trimethyl-		1.53917	1.78449	1.77564		1.77564
Molar Flow		**lbmol/h**	**lbmol/h**	**lbmol/h**		**lbmol/h**
Methane		0.848703	0.0243525	0.0262873		0.0262873
Ethane		0.349765	0.0504877	0.0560298		0.0560298
Propane		0.420026	0.165475	0.181348		0.181348
i-Butane		0.229394	0.146933	0.156156		0.156156
n-Butane		0.372650	0.269569	0.283101		0.283101
Propane, 2,2-Dimethyl-		0.00387654	0.00304399	0.00316395		0.00316395
i-Pentane		0.342317	0.301201	0.308315		0.308315
n-Pentane		0.343506	0.312638	0.318351		0.318351
Butane, 2,2-Dimethyl-		0.0230709	0.0217775	0.0220320		0.0220320
Butane, 2,3-Dimethyl-		0.0860099	0.0825035	0.0832274		0.0832274
Pentane, 2-Methyl-		0.234451	0.225952	0.227752		0.227752
Pentane, 3-Methyl-		0.141737	0.137148	0.138132		0.138132
n-Hexane		0.237833	0.231765	0.233110		0.233110
n-Heptane		1.95853	1.94317	1.94697		1.94697
n-Octane		1.07190	1.06951	1.07016		1.07016
n-Nonane		1.39727	1.39634	1.39662		1.39662
n-Decane		2.16663	2.16620	2.16634		2.16634
Nitrogen		0.000647558	7.97532E-06	8.41368E-06		8.41368E-06
CO2		0.0169150	0.00122527	0.00135561		0.00135561
Benzene		0.146813	0.143249	0.144028		0.144028
Toluene		0.569950	0.566176	0.567104		0.567104
Ethylbenzene		0.0570125	0.0569052	0.0569343		0.0569343
m-Xylene		0.475317	0.474582	0.474785		0.474785
o-Xylene		0.0881538	0.0880315	0.0880654		0.0880654
Pentane, 2,2,4-Trimethyl-		0.181060	0.179479	0.179858		0.179858

Mass Fraction	%	%	%	%
Methane	1.18684	0.0357751	0.0384650	0.0384650
Ethane	0.916771	0.139018	0.153669	0.153669
Propane	1.61449	0.668182	0.729384	0.729384
i-Butane	1.16222	0.782039	0.827845	0.827845
n-Butane	1.88803	1.43475	1.50083	1.50083
Propane, 2,2-Dimethyl-	0.0243802	0.0201112	0.0208212	0.0208212
i-Pentane	2.15289	1.98999	2.02895	2.02895
n-Pentane	2.16037	2.06555	2.09499	2.09499
Butane, 2,2-Dimethyl-	0.173306	0.171853	0.173175	0.173175
Butane, 2,3-Dimethyl-	0.646095	0.651060	0.654180	0.654180
Pentane, 2-Methyl-	1.76117	1.78306	1.79017	1.79017
Pentane, 3-Methyl-	1.06471	1.08228	1.08574	1.08574
n-Hexane	1.78657	1.82893	1.83228	1.83228
n-Heptane	17.1069	17.8300	17.7944	17.7944
n-Octane	10.6732	11.1873	11.1499	11.1499
n-Nonane	15.6214	16.3995	16.3380	16.3380
n-Decane	26.8719	28.2237	28.1140	28.1140
Nitrogen	0.00158128	2.04588E-05	2.14981E-05	2.14981E-05
CO2	0.0648910	0.00493792	0.00544164	0.00544164
Benzene	0.999647	1.02465	1.02615	1.02615
Toluene	4.57764	4.77702	4.76597	4.76597
Ethylbenzene	0.527614	0.553222	0.551319	0.551319
m-Xylene	4.39875	4.61380	4.59754	4.59754
o-Xylene	0.815806	0.855825	0.852774	0.852774
Pentane, 2,2,4-Trimethyl-	1.80286	1.87739	1.87393	1.87393
Mass Flow	**lb/h**	**lb/h**	**lb/h**	**lb/h**
Methane	13.6153	0.390674	0.421714	0.421714
Ethane	10.5171	1.51812	1.68476	1.68476
Propane	18.5213	7.29674	7.99665	7.99665
i-Butane	13.3329	8.54009	9.07614	9.07614
n-Butane	21.6592	15.6679	16.4544	16.4544
Propane, 2,2-Dimethyl-	0.279688	0.219620	0.228275	0.228275
i-Pentane	24.6978	21.7313	22.2446	22.2446
n-Pentane	24.7835	22.5565	22.9686	22.9686
Butane, 2,2-Dimethyl-	1.98814	1.87668	1.89861	1.89861
Butane, 2,3-Dimethyl-	7.41193	7.10977	7.17215	7.17215
Pentane, 2-Methyl-	20.2039	19.4715	19.6266	19.6266
Pentane, 3-Methyl-	12.2142	11.8188	11.9036	11.9036
n-Hexane	20.4953	19.9725	20.0884	20.0884
n-Heptane	196.248	194.709	195.090	195.090
n-Octane	122.442	122.169	122.243	122.243
n-Nonane	179.207	179.088	179.123	179.123
n-Decane	308.272	308.211	308.230	308.230
Nitrogen	0.0181403	0.000223416	0.000235696	0.000235696
CO2	0.744423	0.0539235	0.0596598	0.0596598
Benzene	11.4678	11.1895	11.2503	11.2503
Toluene	52.5143	52.1665	52.2521	52.2521
Ethylbenzene	6.05274	6.04134	6.04443	6.04443
m-Xylene	50.4620	50.3840	50.4055	50.4055
o-Xylene	9.35885	9.34587	9.34946	9.34946
Pentane, 2,2,4-Trimethyl-	20.6823	20.5016	20.5450	20.5450

Process Streams		1	2	3	4	5
Properties	**Status:**	**Solved**	**Solved**	**Solved**	**Solved**	**Solved**
Phase: Light Liquid	**From Block:**	**--**	**VLVE-100**	**XCHG-100**	**VSSL-100**	**VSSL-100**
	To Block:	**VLVE-100**	**XCHG-100**	**VSSL-100**	**--**	**--**
Property	**Units**					
Temperature	°F	66.67	52.7562	45		45
Pressure	psia	239	12	12		12
Mole Fraction Vapor	%	0	0	0		0
Mole Fraction Light Liquid	%	100	100	100		100
Mole Fraction Heavy Liquid	%	0	0	0		0
Molecular Weight	lb/lbmol	97.5208	108.576	108.237		108.237
Mass Density	lb/ft^3	43.9875	45.2167	45.4133		45.4133
Molar Flow	lbmol/h	11.7635	10.0577	10.1292		10.1292
Mass Flow	lb/h	1147.19	1092.03	1096.36		1096.36
Vapor Volumetric Flow	ft^3/h	26.0799	24.1510	24.1418		24.1418
Liquid Volumetric Flow	gpm	3.25152	3.01104	3.00988		3.00988
Std Vapor Volumetric Flow	MMSCFD	0.107138	0.0916020	0.0922533		0.0922533
Std Liquid Volumetric Flow	sgpm	3.30075	3.04770	3.06250		3.0625
Compressibility		0.0938071	0.00523989	0.00528083		0.00528083
Specific Gravity		0.705278	0.724986	0.728139		0.728139
API Gravity		68.1874	64.5939	64.7227		64.7227
Enthalpy	Btu/h	-992936	-922621	-931245		-931245
Mass Enthalpy	Btu/lb	-865.538	-844.868	-849.398		-849.398
Mass Cp	Btu/(lb*°F)	0.489920	0.474739	0.470454		0.470454
Ideal Gas CpCv Ratio		1.05735	1.05276	1.05361		1.05361
Dynamic Viscosity	cP	0.430914	0.584908	0.615177		0.615177
Kinematic Viscosity	cSt	0.611562	0.807548	0.845660		0.845660
Thermal Conductivity	Btu/(h*ft*°F)	0.0721492	0.0746798	0.0753305		0.0753305
Surface Tension	lbf/ft	0.00129587?	0.00156771?	0.00159619		0.00159619
Net Ideal Gas Heating Value	Btu/ft^3	4912.81	5457.67	5441.10		5441.10
Net Liquid Heating Value	Btu/lb	18959.4	18915.2	18916.9		18916.9
Gross Ideal Gas Heating Value	Btu/ft^3	5285.73	5867.34	5849.69		5849.69
Gross Liquid Heating Value	Btu/lb	20410.6	20347.1	20349.4		20349.4

User Value Sets Report

Client Name:	Jonah Energy LLC	**Job:**	
Location:	SHB 6-32 CDP		
Flowsheet:	Flowsheet1		

Tank Losses

User Value [ShellLength]

Parameter	20*	ft	Upper Bound	
Lower Bound	0*	ft	Enforce Bound	FALSE

User Value [ShellDiam]

Parameter	12*	ft	Upper Bound	
Lower Bound	0*	ft	Enforce Bound	FALSE

User Value [BreatherVP]

Parameter	0.25*	psig	Upper Bound	
Lower Bound			Enforce Bound	FALSE

User Value [BreatherVacP]

Parameter	-0.0300000*	psig	Upper Bound	
Lower Bound			Enforce Bound	FALSE

User Value [DomeRadius]

Parameter		ft	Upper Bound	ft
Lower Bound		ft	Enforce Bound	FALSE

User Value [OpPress]

Parameter	0*	psig	Upper Bound	
Lower Bound			Enforce Bound	FALSE

User Value [AvgPercentLiq]

Parameter	0.5*	%	Upper Bound	
Lower Bound		%	Enforce Bound	FALSE

User Value [MaxPercentLiq]

Parameter	0.975*	%	Upper Bound	
Lower Bound		%	Enforce Bound	FALSE

User Value [AnnNetTP]

Parameter	102.100*	bbl/day	Upper Bound	
Lower Bound	0*	bbl/day	Enforce Bound	FALSE

User Value [OREff]

Parameter	70*	%	Upper Bound	
Lower Bound		%	Enforce Bound	FALSE

User Value [AtmPressure]

Parameter	11.7595*	psia	Upper Bound	
Lower Bound			Enforce Bound	FALSE

User Value [MaxLiqSurfaceT]

Parameter	67.0676*	°F	Upper Bound	
Lower Bound			Enforce Bound	FALSE

User Value [WorkingLosses]			
Parameter	0.106243*	ton/yr	Upper Bound
Lower Bound		ton/yr	Enforce Bound FALSE

User Value [StandingLosses]			
Parameter	0.688398*	ton/yr	Upper Bound
Lower Bound		ton/yr	Enforce Bound FALSE

User Value [RimSealLosses]			
Parameter	0*	ton/yr	Upper Bound
Lower Bound			Enforce Bound FALSE

User Value [WithdrawalLoss]			
Parameter	0*	ton/yr	Upper Bound
Lower Bound			Enforce Bound FALSE

User Value [LoadingLosses]			
Parameter	0*	ton/yr	Upper Bound
Lower Bound			Enforce Bound FALSE

User Value [DeckFittingLosses]			
Parameter	0*	ton/yr	Upper Bound
Lower Bound			Enforce Bound FALSE

User Value [DeckSeamLosses]			
Parameter	0*	ton/yr	Upper Bound
Lower Bound			Enforce Bound FALSE

User Value [FlashingLosses]			
Parameter	186.086*	ton/yr	Upper Bound
Lower Bound			Enforce Bound FALSE

User Value [GasMoleWeight]			
Parameter	0.0576622*	kg/mol	Upper Bound
Lower Bound			Enforce Bound FALSE

Notes:
This User Value Set was programmatically generated. GUID={F64D6CE6-B4EB-49FC-97CA-502E6C4C6D1B}

GRI-GLYCalc VERSION 4.0 - SUMMARY OF INPUT VALUES

Case Name: SHB 6-32 - Actual Production
File Name: S:\North_Rockies\EH&S\Jonah Field\Air\Permits & Applications\Well Production Facilities\SHB 6-32\Permit Applications\05-2015 app\SHB 6-32 - GLYCalc_20MM LP.ddf
Date: May 20, 2015

DESCRIPTION:

Description: (1) 20 MM Dehy wirh total of (3) Kimray 20015SC Glycol Pumps (two used, one spare) and 13 MMCFD through this 1 dehy unit

Annual Hours of Operation: 8760.0 hours/yr

WET GAS:

Temperature: 67.00 deg. F
Pressure: 227.00 psig
Wet Gas Water Content: Saturated

Component	Conc. (vol %)
Carbon Dioxide	0.6663
Nitrogen	0.2502
Methane	90.1348
Ethane	5.4990
Propane	1.9710
Isobutane	0.4483
n-Butane	0.4514
Isopentane	0.1823
n-Pentane	0.1277
n-Hexane	0.0443
Cyclohexane	0.0263
Other Hexanes	0.0801
Heptanes	0.0428
Methylcyclohexane	0.0323
2,2,4-Trimethylpentane	0.0036
Benzene	0.0134
Toluene	0.0129
Ethylbenzene	0.0002
Xylenes	0.0019
C8+ Heavies	0.0110

DRY GAS:

Flow Rate: 13.0 MMSCF/day
Water Content: 5.0 lbs. H2O/MMSCF

LEAN GLYCOL:

Glycol Type: TEG
Water Content: 1.5 wt% H2O
Flow Rate: 6.7 gpm

PUMP:

Glycol Pump Type: Gas Injection
Gas Injection Pump Volume Ratio: 0.080 acfm gas/gpm glycol

FLASH TANK:

Flash Control: Combustion device
Flash Control Efficiency: 98.00 %
Temperature: 150.0 deg. F
Pressure: 50.0 psig

REGENERATOR OVERHEADS CONTROL DEVICE:

Control Device: Condenser
Temperature: 130.0 deg. F
Pressure: 12.0 psia

Control Device: Combustion Device
Destruction Efficiency: 98.0 %
Excess Oxygen: 15.0 %
Ambient Air Temperature: 45.0 deg. F

GRI-GLYCalc VERSION 4.0 - AGGREGATE CALCULATIONS REPORT

Case Name: SHB 6-32 - Actual Production
File Name: S:\North_Rockies\EH&S\Jonah Field\Air\Permits & Applications\Well Production Facilities\SHB 6-32\Permit Applications\05-2015 app\SHB 6-32 - GLYCalc_20MM LP.ddf
Date: May 20, 2015

DESCRIPTION:

Description: (1) 20 MM Dehy wirh total of (3) Kimray 20015SC Glycol Pumps (two used, one spare) and 13 MMCFD through this 1 dehy unit

Annual Hours of Operation: 8760.0 hours/yr

EMISSIONS REPORTS:

CONTROLLED REGENERATOR EMISSIONS

Component	lbs/hr	lbs/day	tons/yr
Methane	0.0152	0.364	0.0664
Ethane	0.0077	0.186	0.0339
Propane	0.0104	0.250	0.0457
Isobutane	0.0057	0.136	0.0248
n-Butane	0.0084	0.201	0.0367
Isopentane	0.0042	0.101	0.0185
n-Pentane	0.0041	0.098	0.0179
n-Hexane	0.0030	0.073	0.0133
Cyclohexane	0.0090	0.216	0.0394
Other Hexanes	0.0042	0.101	0.0185
Heptanes	0.0052	0.124	0.0227
Methylcyclohexane	0.0111	0.267	0.0488
2,2,4-Trimethylpentane	0.0002	0.004	0.0008
Benzene	0.0333	0.799	0.1459
Toluene	0.0239	0.573	0.1045
Ethylbenzene	0.0002	0.004	0.0008
Xylenes	0.0018	0.043	0.0078
C8+ Heavies	0.0001	0.001	0.0002
Total Emissions	0.1476	3.542	0.6465
Total Hydrocarbon Emissions	0.1476	3.542	0.6465
Total VOC Emissions	0.1247	2.993	0.5462
Total HAP Emissions	0.0623	1.496	0.2731
Total BTEX Emissions	0.0591	1.419	0.2590

UNCONTROLLED REGENERATOR EMISSIONS

Component	lbs/hr	lbs/day	tons/yr
Methane	0.7599	18.238	3.3285
Ethane	0.3921	9.411	1.7176
Propane	0.5571	13.370	2.4399
Isobutane	0.3208	7.700	1.4053
n-Butane	0.4991	11.977	2.1858
Isopentane	0.3221	7.730	1.4107
n-Pentane	0.3260	7.823	1.4277
n-Hexane	0.3559	8.541	1.5586

Cyclohexane	1.3275	31.860	5.8144
Other Hexanes	0.4149	9.958	1.8174
Heptanes	1.1954	28.690	5.2360
Methylcyclohexane	2.6976	64.743	11.8157
2,2,4-Trimethylpentane	0.0406	0.975	0.1779
Benzene	5.3700	128.881	23.5207
Toluene	8.3301	211.922	38.6758
Ethylbenzene	0.2093	5.023	0.9167
Xylenes	2.2447	53.874	9.8319
C8+ Heavies	3.0471	73.131	13.3464
Total Emissions	28.9103	693.847	126.6270
Total Hydrocarbon Emissions	28.9103	693.847	126.6270
Total VOC Emissions	27.7582	666.197	121.5809
Total HAP Emissions	17.0506	409.214	74.6816
Total BTEX Emissions	16.6541	399.699	72.9451

FLASH GAS EMISSIONS

Component	lbs/hr	lbs/day	tons/yr
Methane	0.4499	10.797	1.9704
Ethane	0.0688	1.650	0.3012
Propane	0.0490	1.176	0.2147
Isobutane	0.0194	0.466	0.0850
n-Butane	0.0235	0.565	0.1031
Isopentane	0.0136	0.326	0.0594
n-Pentane	0.0113	0.270	0.0493
n-Hexane	0.0071	0.169	0.0309
Cyclohexane	0.0065	0.156	0.0284
Other Hexanes	0.0107	0.256	0.0468
Heptanes	0.0120	0.288	0.0526
Methylcyclohexane	0.0106	0.255	0.0466
2,2,4-Trimethylpentane	0.0008	0.019	0.0034
Benzene	0.0043	0.103	0.0188
Toluene	0.0047	0.113	0.0206
Ethylbenzene	0.0001	0.002	0.0003
Xylenes	0.0005	0.012	0.0022
C8+ Heavies	0.0043	0.104	0.0190
Total Emissions	0.6970	16.728	3.0528
Total Hydrocarbon Emissions	0.6970	16.728	3.0528
Total VOC Emissions	0.1784	4.281	0.7812
Total HAP Emissions	0.0174	0.418	0.0763
Total BTEX Emissions	0.0096	0.230	0.0419

FLASH TANK OFF GAS

Component	lbs/hr	lbs/day	tons/yr
Methane	22.4936	539.845	98.5218
Ethane	3.4378	82.507	15.0575
Propane	2.4505	58.812	10.7332
Isobutane	0.9706	23.296	4.2514
n-Butane	1.1775	28.259	5.1572
Isopentane	0.6783	16.278	2.9708
n-Pentane	0.5630	13.512	2.4659
n-Hexane	0.3529	8.470	1.5458

Cyclohexane	0.3246	7.790	1.4217
Other Hexanes	0.5340	12.816	2.3389
Heptanes	0.6005	14.411	2.6300
Methylcyclohexane	0.5316	12.759	2.3286
2,2,4-Trimethylpentane	0.0393	0.943	0.1721
Benzene	0.2147	5.152	0.9403
Toluene	0.2349	5.638	1.0289
Ethylbenzene	0.0033	0.080	0.0146
Xylenes	0.0255	0.612	0.1117
C8+ Heavies	0.2170	5.208	0.9505
Total Emissions	34.8495	836.388	152.6408
Total Hydrocarbon Emissions	34.8495	836.388	152.6408
Total VOC Emissions	8.9182	214.036	39.0615
Total HAP Emissions	0.8706	20.895	3.8133
Total BTEX Emissions	0.4784	11.482	2.0954

EQUIPMENT REPORTS:

CONDENSER AND COMBUSTION DEVICE

Condenser Outlet Temperature:	130.00	deg. F
Condenser Pressure:	12.00	psia
Condenser Duty:	3.31e-002	MM BTU/hr
Hydrocarbon Recovery:	1.73	bbls/day
Produced Water:	2.43	bbls/day
Ambient Temperature:	45.00	deg. F
Excess Oxygen:	15.00	%
Combustion Efficiency:	98.00	%
Supplemental Fuel Requirement:	3.31e-002	MM BTU/hr

Component	Emitted	Destroyed
Methane	1.99%	98.01%
Ethane	1.97%	98.03%
Propane	1.87%	98.13%
Isobutane	1.76%	98.24%
n-Butane	1.68%	98.32%
Isopentane	1.31%	98.69%
n-Pentane	1.26%	98.74%
n-Hexane	0.86%	99.14%
Cyclohexane	0.68%	99.32%
Other Hexanes	1.02%	98.98%
Heptanes	0.43%	99.57%
Methylcyclohexane	0.41%	99.59%
2,2,4-Trimethylpentane	0.42%	99.58%
Benzene	0.62%	99.38%
Toluene	0.27%	99.73%
Ethylbenzene	0.09%	99.91%
Xylenes	0.08%	99.92%
C8+ Heavies	0.00%	100.00%

ABSORBER

NOTE: Because the Calculated Absorber Stages was below the minimum allowed, GRI-GLYCalc has set the number of Absorber Stages to 1.25 and has calculated a revised Dry Gas Dew Point.

Calculated Absorber Stages:	1.25
Calculated Dry Gas Dew Point:	2.60 lbs. H2O/MMSCF
Temperature:	67.0 deg. F
Pressure:	227.0 psig
Dry Gas Flow Rate:	13.0000 MMSCF/day
Glycol Losses with Dry Gas:	0.0110 lb/hr
Wet Gas Water Content:	Saturated
Calculated Wet Gas Water Content:	69.27 lbs. H2O/MMSCF
Calculated Lean Glycol Recirc. Ratio:	11.07 gal/lb H2O

Component	Remaining in Dry Gas	Absorbed in Glycol
Water	3.75%	96.25%
Carbon Dioxide	99.72%	0.28%
Nitrogen	99.98%	0.02%
Methane	99.98%	0.02%
Ethane	99.94%	0.06%
Propane	99.86%	0.14%
Isobutane	99.75%	0.25%
n-Butane	99.65%	0.35%
Isopentane	99.57%	0.43%
n-Pentane	99.42%	0.58%
n-Hexane	98.80%	1.20%
Cyclohexane	94.87%	5.13%
Other Hexanes	99.14%	0.86%
Heptanes	97.17%	2.83%
Methylcyclohexane	92.97%	7.03%
2,2,4-Trimethylpentane	98.74%	1.26%
Benzene	62.74%	37.26%
Toluene	46.70%	53.30%
Ethylbenzene	29.99%	70.01%
Xylenes	21.30%	78.70%
C8+ Heavies	87.90%	12.10%

FLASH TANK

Flash Control:	Combustion device
Flash Control Efficiency:	98.00 %
Flash Temperature:	150.0 deg. F
Flash Pressure:	50.0 psig

Component	Left in Glycol	Removed in Flash Gas
Water	99.89%	0.11%
Carbon Dioxide	25.24%	74.76%
Nitrogen	3.22%	96.78%
Methane	3.27%	96.73%
Ethane	10.24%	89.76%
Propane	18.52%	81.48%
Isobutane	24.84%	75.16%
n-Butane	29.77%	70.23%
Isopentane	32.47%	67.53%
n-Pentane	36.94%	63.06%

n-Hexane	50.44%	49.56%
Cyclohexane	80.97%	19.03%
Other Hexanes	44.23%	55.77%
Heptanes	66.73%	33.27%
Methylcyclohexane	84.19%	15.81%
2,2,4-Trimethylpentane	51.52%	48.48%
Benzene	96.35%	3.65%
Toluene	97.61%	2.39%
Ethylbenzene	98.60%	1.40%
Xylenes	99.02%	0.98%
C8+ Heavies	94.15%	5.85%

REGENERATOR

No Stripping Gas used in regenerator.

Component	Remaining in Glycol	Distilled Overhead
Water	60.92%	39.08%
Carbon Dioxide	0.00%	100.00%
Nitrogen	0.00%	100.00%
Methane	0.00%	100.00%
Ethane	0.00%	100.00%
Propane	0.00%	100.00%
Isobutane	0.00%	100.00%
n-Butane	0.00%	100.00%
Isopentane	1.26%	98.74%
n-Pentane	1.16%	98.84%
n-Hexane	0.92%	99.08%
Cyclohexane	3.88%	96.12%
Other Hexanes	2.03%	97.97%
Heptanes	0.72%	99.28%
Methylcyclohexane	4.69%	95.31%
2,2,4-Trimethylpentane	2.71%	97.29%
Benzene	5.18%	94.82%
Toluene	8.08%	91.92%
Ethylbenzene	10.54%	89.46%
Xylenes	13.01%	86.99%
C8+ Heavies	12.67%	87.33%

STREAM REPORTS:

WET GAS STREAM

Temperature: 67.00 deg. F
Pressure: 241.70 psia
Flow Rate: 5.43e+005 scfh

Component	Conc. (vol%)	Loading (lb/hr)
Water	1.46e-001	3.76e+001
Carbon Dioxide	6.65e-001	4.19e+002
Nitrogen	2.50e-001	1.00e+002

Methane	9.00e+001	2.06e+004
Ethane	5.49e+000	2.36e+003
Propane	1.97e+000	1.24e+003
Isobutane	4.48e-001	3.72e+002
n-Butane	4.51e-001	3.75e+002
Isopentane	1.82e-001	1.88e+002
n-Pentane	1.28e-001	1.32e+002
n-Hexane	4.42e-002	5.45e+001
Cyclohexane	2.63e-002	3.16e+001
Other Hexanes	8.00e-002	9.86e+001
Heptanes	4.27e-002	6.13e+001
Methylcyclohexane	3.23e-002	4.53e+001
2,2,4-Trimethylpentane	3.59e-003	5.87e+000
Benzene	1.34e-002	1.49e+001
Toluene	1.29e-002	1.70e+001
Ethylbenzene	2.00e-004	3.03e-001
Xylenes	1.90e-003	2.88e+000
C8+ Heavies	1.10e-002	2.68e+001
Total Components	100.00	2.62e+004

DRY GAS STREAM

Temperature: 67.00 deg. F
Pressure: 241.70 psia
Flow Rate: 5.42e+005 scfh

Component	Conc. (vol%)	Loading (lb/hr)
Water	5.49e-003	1.41e+000
Carbon Dioxide	6.65e-001	4.18e+002
Nitrogen	2.50e-001	1.00e+002
Methane	9.02e+001	2.06e+004
Ethane	5.50e+000	2.36e+003
Propane	1.97e+000	1.24e+003
Isobutane	4.47e-001	3.71e+002
n-Butane	4.50e-001	3.73e+002
Isopentane	1.82e-001	1.87e+002
n-Pentane	1.27e-001	1.31e+002
n-Hexane	4.38e-002	5.39e+001
Cyclohexane	2.50e-002	3.00e+001
Other Hexanes	7.94e-002	9.77e+001
Heptanes	4.16e-002	5.95e+001
Methylcyclohexane	3.00e-002	4.21e+001
2,2,4-Trimethylpentane	3.56e-003	5.80e+000
Benzene	8.41e-003	9.38e+000
Toluene	6.03e-003	7.93e+000
Ethylbenzene	6.00e-005	9.09e-002
Xylenes	4.05e-004	6.14e-001
C8+ Heavies	9.67e-003	2.35e+001
Total Components	100.00	2.62e+004

LEAN GLYCOL STREAM

Temperature: 67.00 deg. F
Flow Rate: 6.67e+000 gpm

Component	Conc. (wt%)	Loading (lb/hr)
TEG	9.84e+001	3.69e+003
Water	1.50e+000	5.63e+001
Carbon Dioxide	3.12e-012	1.17e-010
Nitrogen	4.08e-014	1.53e-012
Methane	2.79e-018	1.05e-016
Ethane	1.92e-008	7.21e-007
Propane	1.95e-009	7.31e-008
Isobutane	7.42e-010	2.79e-008
n-Butane	8.66e-010	3.25e-008
Isopentane	1.09e-004	4.11e-003
n-Pentane	1.02e-004	3.82e-003
n-Hexane	8.78e-005	3.29e-003
Cyclohexane	1.43e-003	5.36e-002
Other Hexanes	2.30e-004	8.61e-003
Heptanes	2.32e-004	8.72e-003
Methylcyclohexane	3.54e-003	1.33e-001
2,2,4-Trimethylpentane	3.01e-005	1.13e-003
Benzene	7.81e-003	2.93e-001
Toluene	2.07e-002	7.76e-001
Ethylbenzene	6.57e-004	2.46e-002
Xylenes	8.95e-003	3.36e-001
C8+ Heavies	1.18e-002	4.42e-001
Total Components	100.00	3.75e+003

RICH GLYCOL AND PUMP GAS STREAM

Temperature: 67.00 deg. F
Pressure: 241.70 psia
Flow Rate: 6.88e+000 gpm
NOTE: Stream has more than one phase.

Component	Conc. (wt%)	Loading (lb/hr)
TEG	9.58e+001	3.69e+003
Water	2.40e+000	9.25e+001
Carbon Dioxide	4.09e-002	1.58e+000
Nitrogen	2.93e-003	1.13e-001
Methane	6.03e-001	2.33e+001
Ethane	9.94e-002	3.83e+000
Propane	7.80e-002	3.01e+000
Isobutane	3.35e-002	1.29e+000
n-Butane	4.35e-002	1.68e+000
Isopentane	2.61e-002	1.00e+000
n-Pentane	2.32e-002	8.93e-001
n-Hexane	1.85e-002	7.12e-001
Cyclohexane	4.43e-002	1.71e+000
Other Hexanes	2.48e-002	9.58e-001
Heptanes	4.68e-002	1.80e+000
Methylcyclohexane	8.72e-002	3.36e+000
2,2,4-Trimethylpentane	2.10e-003	8.10e-002
Benzene	1.53e-001	5.88e+000
Toluene	2.55e-001	9.84e+000
Ethylbenzene	6.16e-003	2.37e-001
Xylenes	6.76e-002	2.61e+000

C8+ Heavies	9.62e-002	3.71e+000
Total Components	100.00	3.85e+003

FLASH TANK OFF GAS STREAM

Temperature: 150.00 deg. F
Pressure: 64.70 psia
Flow Rate: 6.43e+002 scfh

Component	Conc. (vol%)	Loading (lb/hr)
Water	3.45e-001	1.05e-001
Carbon Dioxide	1.58e+000	1.18e+000
Nitrogen	2.30e-001	1.09e-001
Methane	8.27e+001	2.25e+001
Ethane	6.74e+000	3.44e+000
Propane	3.28e+000	2.45e+000
Isobutane	9.85e-001	9.71e-001
n-Butane	1.19e+000	1.18e+000
Isopentane	5.54e-001	6.78e-001
n-Pentane	4.60e-001	5.63e-001
n-Hexane	2.42e-001	3.53e-001
Cyclohexane	2.27e-001	3.25e-001
Other Hexanes	3.65e-001	5.34e-001
Heptanes	3.53e-001	6.00e-001
Methylcyclohexane	3.19e-001	5.32e-001
2,2,4-Trimethylpentane	2.03e-002	3.93e-002
Benzene	1.62e-001	2.15e-001
Toluene	1.50e-001	2.35e-001
Ethylbenzene	1.85e-003	3.33e-003
Xylenes	1.42e-002	2.55e-002
C8+ Heavies	7.51e-002	2.17e-001
Total Components	100.00	3.62e+001

FLASH TANK GLYCOL STREAM

Temperature: 150.00 deg. F
Flow Rate: 6.80e+000 gpm

Component	Conc. (wt%)	Loading (lb/hr)
TEG	9.68e+001	3.69e+003
Water	2.42e+000	9.24e+001
Carbon Dioxide	1.04e-002	3.98e-001
Nitrogen	9.52e-005	3.64e-003
Methane	1.99e-002	7.60e-001
Ethane	1.03e-002	3.92e-001
Propane	1.46e-002	5.57e-001
Isobutane	8.40e-003	3.21e-001
n-Butane	1.31e-002	4.99e-001
Isopentane	8.54e-003	3.26e-001
n-Pentane	8.64e-003	3.30e-001
n-Hexane	9.41e-003	3.59e-001
Cyclohexane	3.62e-002	1.38e+000
Other Hexanes	1.11e-002	4.24e-001
Heptanes	3.15e-002	1.20e+000

Methylcyclohexane	7.41e-002	2.83e+000
2,2,4-Trimethylpentane	1.09e-003	4.17e-002
Benzene	1.48e-001	5.66e+000
Toluene	2.52e-001	9.61e+000
Ethylbenzene	6.13e-003	2.34e-001
Xylenes	6.76e-002	2.58e+000
C8+ Heavies	9.14e-002	3.49e+000
Total Components	100.00	3.82e+003

FLASH GAS EMISSIONS

Flow Rate: 2.31e+003 scfh
Control Method: Combustion Device
Control Efficiency: 98.00

Component	Conc. (vol%)	Loading (lb/hr)
Water	6.26e+001	6.86e+001
Carbon Dioxide	3.67e+001	9.83e+001
Nitrogen	6.42e-002	1.09e-001
Methane	4.62e-001	4.50e-001
Ethane	3.76e-002	6.88e-002
Propane	1.83e-002	4.90e-002
Isobutane	5.50e-003	1.94e-002
n-Butane	6.67e-003	2.35e-002
Isopentane	3.09e-003	1.36e-002
n-Pentane	2.57e-003	1.13e-002
n-Hexane	1.35e-003	7.06e-003
Cyclohexane	1.27e-003	6.49e-003
Other Hexanes	2.04e-003	1.07e-002
Heptanes	1.97e-003	1.20e-002
Methylcyclohexane	1.78e-003	1.06e-002
2,2,4-Trimethylpentane	1.13e-004	7.86e-004
Benzene	9.05e-004	4.29e-003
Toluene	8.39e-004	4.70e-003
Ethylbenzene	1.03e-005	6.65e-005
Xylenes	7.90e-005	5.10e-004
C8+ Heavies	4.19e-004	4.34e-003
Total Components	100.00	1.68e+002

REGENERATOR OVERHEADS STREAM

Temperature: 212.00 deg. F
Pressure: 14.70 psia
Flow Rate: 9.03e+002 scfh

Component	Conc. (vol%)	Loading (lb/hr)
Water	8.42e+001	3.61e+001
Carbon Dioxide	3.80e-001	3.98e-001
Nitrogen	5.45e-003	3.64e-003
Methane	1.99e+000	7.60e-001
Ethane	5.48e-001	3.92e-001
Propane	5.31e-001	5.57e-001
Isobutane	2.32e-001	3.21e-001

n-Butane	3.61e-001	4.99e-001
Isopentane	1.88e-001	3.22e-001
n-Pentane	1.90e-001	3.26e-001
n-Hexane	1.73e-001	3.56e-001
Cyclohexane	6.63e-001	1.33e+000
Other Hexanes	2.02e-001	4.15e-001
Heptanes	5.01e-001	1.20e+000
Methylcyclohexane	1.15e+000	2.70e+000
2,2,4-Trimethylpentane	1.49e-002	4.06e-002
Benzene	2.89e+000	5.37e+000
Toluene	4.03e+000	8.83e+000
Ethylbenzene	8.28e-002	2.09e-001
Xylenes	8.88e-001	2.24e+000
C8+ Heavies	7.51e-001	3.05e+000
Total Components	100.00	6.54e+001

CONDENSER PRODUCED WATER STREAM

Temperature: 130.00 deg. F
Flow Rate: 7.10e-002 gpm

Component	Conc. (wt%)	Loading (lb/hr)	(ppm)
Water	9.99e+001	3.55e+001	999083.
Carbon Dioxide	3.12e-003	1.11e-003	31.
Nitrogen	8.01e-007	2.84e-007	0.
Methane	3.16e-004	1.12e-004	3.
Ethane	1.79e-004	6.37e-005	2.
Propane	2.67e-004	9.47e-005	3.
Isobutane	7.80e-005	2.77e-005	1.
n-Butane	1.52e-004	5.39e-005	2.
Isopentane	5.31e-005	1.89e-005	1.
n-Pentane	5.50e-005	1.95e-005	1.
n-Hexane	3.33e-005	1.18e-005	0.
Cyclohexane	5.37e-004	1.91e-004	5.
Other Hexanes	3.75e-005	1.33e-005	0.
Heptanes	3.09e-005	1.10e-005	0.
Methylcyclohexane	3.15e-004	1.12e-004	3.
2,2,4-Trimethylpentane	6.92e-007	2.46e-007	0.
Benzene	5.32e-002	1.89e-002	532.
Toluene	3.08e-002	1.10e-002	308.
Ethylbenzene	1.78e-004	6.32e-005	2.
Xylenes	2.36e-003	8.38e-004	24.
C8+ Heavies	1.88e-007	6.69e-008	0.
Total Components	100.00	3.55e+001	1000000.

CONDENSER RECOVERED OIL STREAM

Temperature: 130.00 deg. F
Flow Rate: 5.06e-002 gpm

Component	Conc. (wt%)	Loading (lb/hr)
Water	5.19e-002	1.12e-002
Carbon Dioxide	1.46e-002	3.14e-003

Nitrogen	7.38e-005	1.59e-005
Methane	8.83e-003	1.90e-003
Ethane	2.59e-002	5.57e-003
Propane	1.66e-001	3.57e-002
Isobutane	1.78e-001	3.82e-002
n-Butane	3.73e-001	8.02e-002
Isopentane	5.16e-001	1.11e-001
n-Pentane	5.63e-001	1.21e-001
n-Hexane	9.47e-001	2.04e-001
Cyclohexane	4.08e+000	8.77e-001
Other Hexanes	9.47e-001	2.04e-001
Heptanes	4.35e+000	9.37e-001
Methylcyclohexane	9.95e+000	2.14e+000
2,2,4-Trimethylpentane	1.49e-001	3.20e-002
Benzene	1.71e+001	3.69e+000
Toluene	3.54e+001	7.63e+000
Ethylbenzene	9.30e-001	2.00e-001
Xylenes	1.00e+001	2.15e+000
C8+ Heavies	1.42e+001	3.04e+000
Total Components	100.00	2.15e+001

CONDENSER VENT STREAM

Temperature: 130.00 deg. F
Pressure: 12.00 psia
Flow Rate: 7.08e+001 scfh

Component	Conc. (vol%)	Loading (lb/hr)
Water	1.86e+001	6.26e-001
Carbon Dioxide	4.80e+000	3.94e-001
Nitrogen	6.92e-002	3.62e-003
Methane	2.53e+001	7.58e-001
Ethane	6.88e+000	3.87e-001
Propane	6.33e+000	5.21e-001
Isobutane	2.60e+000	2.83e-001
n-Butane	3.86e+000	4.19e-001
Isopentane	1.57e+000	2.11e-001
n-Pentane	1.52e+000	2.05e-001
n-Hexane	9.46e-001	1.52e-001
Cyclohexane	2.86e+000	4.50e-001
Other Hexanes	1.31e+000	2.11e-001
Heptanes	1.38e+000	2.59e-001
Methylcyclohexane	3.04e+000	5.57e-001
2,2,4-Trimethylpentane	4.02e-002	8.58e-003
Benzene	1.14e+001	1.66e+000
Toluene	6.93e+000	1.19e+000
Ethylbenzene	4.67e-002	9.26e-003
Xylenes	4.52e-001	8.96e-002
C8+ Heavies	8.30e-003	2.64e-003
Total Components	100.00	8.40e+000

COMBUSTION DEVICE OFF GAS STREAM

Temperature: 1000.00 deg. F

Pressure: 14.70 psia
Flow Rate: 1.08e+000 scfh

Component	Conc. (vol%)	Loading (lb/hr)
Methane	3.31e+001	1.52e-002
Ethane	9.00e+000	7.73e-003
Propane	8.27e+000	1.04e-002
Isobutane	3.40e+000	5.65e-003
n-Butane	5.04e+000	8.38e-003
Isopentane	2.05e+000	4.22e-003
n-Pentane	1.99e+000	4.10e-003
n-Hexane	1.24e+000	3.04e-003
Cyclohexane	3.74e+000	9.00e-003
Other Hexanes	1.72e+000	4.22e-003
Heptanes	1.81e+000	5.17e-003
Methylcyclohexane	3.97e+000	1.11e-002
2,2,4-Trimethylpentane	5.26e-002	1.72e-004
Benzene	1.49e+001	3.33e-002
Toluene	9.06e+000	2.39e-002
Ethylbenzene	6.10e-002	1.85e-004
Xylenes	5.91e-001	1.79e-003
C8+ Heavies	1.08e-002	5.28e-005
Total Components	100.00	1.48e-001

HISTORICAL/BASELINE EMISSION CALCULATIONS

FIELD NAME	Well	WELL DESCRIPTION	Period End	Day	OIL PROD	OIL SALES	GAS PROD	GAS SALES	WATER PROD	OIL PROD [BBLS/D]	GAS PROD [MCF/D]
JONAH	765352	STUD HORSE BUTTE 1-33	1/31/2008	31	110	127	11178	10906	138	4.1	360.6
JONAH	765352	STUD HORSE BUTTE 1-33	2/29/2008	29	39	94	4338	4084	34	3.2	149.6
JONAH	765352	STUD HORSE BUTTE 1-33	3/31/2008	31	24	19	2676	2404	17	0.6	86.3
	********							----------			
	******				---------	---------	---------	--		2.7	0.2
	765352				172	240	18192	17394			
JONAH	23978	STUD HORSE BUTTE 17-33	1/31/2008	31	278	271	27957	27685	351	8.7	901.8
JONAH	23978	STUD HORSE BUTTE 17-33	2/29/2008	29	263	388	28024	27770	234	13.4	966.3
JONAH	23978	STUD HORSE BUTTE 17-33	3/31/2008	31	275	203	28318	28046	196	6.5	913.5
	********							----------			
	******				---------	---------	---------	--		9.6	0.9
	23978				815	861	84299	83501			
JONAH	23982	STUD HORSE BUTTE 31-33	1/31/2008	31	261	258	26279	26007	330	8.3	847.7
JONAH	23982	STUD HORSE BUTTE 31-33	2/29/2008	29	239	358	25574	25320	213	12.3	881.9
JONAH	23982	STUD HORSE BUTTE 31-33	3/31/2008	31	251	185	25914	25642	180	6.0	835.9
	********							----------			
	******				---------	---------	---------	--		8.9	0.9
	23982				752	801	77767	76969			
JONAH	23983	STUD HORSE BUTTE 32-33	1/31/2008	31	194	208	19569	19297	245	6.7	631.3
JONAH	23983	STUD HORSE BUTTE 32-33	2/29/2008	29	232	314	24757	24503	206	10.8	853.7
JONAH	23983	STUD HORSE BUTTE 32-33	3/31/2008	31	235	174	24311	24039	168	5.6	784.2
	********							----------			
	******				---------	---------	---------	--		7.7	0.8
	23983				661	697	68637	67839			

GAS PROD [MCF/D]	OIL PROD [BBLS/D]
2.8	29.0

Company Name: **Jonah Energy LLC**
Field Name: **Jonah Field**
Facility Name: **Stud Horse Butte 1-33 - Baseline Calcs**

Wyoming Air Quality Application Emission Summary Sheet

Baseline Uncontrolled Production Equipment Emissions Based on Annualized Rate

			NOx		CO		SO2		Particulates		VOC		Total HAPs	
Ref No.	**Equipment**	**Note**	**lb/hr**	**TPY**	**lb/hr**	**TPY**	**lb/hr**	**TPY**	**lb/hr**	**TPY**	**lb/hr**	**TPY**	**lb/hr**	**TPY**
001	(1) 0.175 MMBtu/hr TEG Reboiler	a	0.02	0.08	0.02	0.07	0.000	0.000	0.001	0.006	0.0002	0.0009	0.000	0.000
002	(1) 0.175 MMBtu/hr TEG Reboiler	a	0.02	0.08	0.02	0.07	0.000	0.000	0.001	0.006	0.0002	0.0009	0.000	0.000
003	(1) 0.085 MMBtu/hr TEG Reboiler	a	0.01	0.04	0.01	0.03	0.000	0.000	0.001	0.003	0.0001	0.0004	0.000	0.000
004	(1) 0.085 MMBtu/hr Flash Tank Heater	a	0.01	0.04	0.01	0.03	0.000	0.000	0.001	0.003	0.0001	0.0004	0.000	0.000
005	(1) 0.085 MMBtu/hr Flash Tank Heater	a	0.01	0.04	0.01	0.03	0.000	0.000	0.001	0.003	0.0001	0.0004	0.000	0.000
006	(1) 0.085 MMBtu/hr Flash Tank Heater	a	0.01	0.04	0.01	0.03	0.000	0.000	0.001	0.003	0.0001	0.0004	0.000	0.000
007	(1) 1.0 MMBtu/hr Indirect Heater	a	0.11	0.47	0.09	0.39	0.001	0.003	0.008	0.036	0.0012	0.0053	0.000	0.000
008	(1) 1.0 MMBtu/hr Indirect Heater	a	0.11	0.47	0.09	0.39	0.001	0.003	0.008	0.036	0.0012	0.0053	0.000	0.000
009	(1) 0.75 MMBtu/hr Indirect Heater	a	0.08	0.35	0.07	0.29	0.000	0.002	0.006	0.027	0.0009	0.0040	0.000	0.000
010	(1) 10 MMSCFD TEG Dehydration Unit		0.00	0.00	0.00	0.00	0.000	0.000	0.000	0.000	6.57	28.8	2.49	10.91
011	(1) 10 MMSCFD TEG Dehydration Unit		0.00	0.00	0.00	0.00	0.000	0.000	0.000	0.000	6.57	28.8	2.49	10.91
012	(1) 4 MMSCFD TEG Dehydration Unit		0.00	0.00	0.00	0.00	0.000	0.000	0.000	0.000	2.88	12.6	1.06	4.66
013	(2) 400 bbl Condensate Tanks		0.00	0.00	0.00	0.00	0.000	0.000	0.000	0.000	8.11	35.5	0.31	1.36
014	Pneumatics (Pumps and Liquid Level Controllers)	b	0.00	0.00	0.00	0.00	0.000	0.000	0.000	0.000	11.99	39.5	0.43	1.40
015	Tank Truck Loading	c	0.00	0.00	0.00	0.00	0.000	0.000	0.000	0.000	20.29	0.4	0.77	0.02
016	Fugitives	d	0.00	0.00	0.00	0.00	0.000	0.000	0.000	0.000	1.40	6.1	0.15	0.64
017	(1) 400 bbl Produced Water Tanks	e	0.00	0.00	0.00	0.00	0.000	0.000	0.000	0.000	Not Est.			
018	Enclosed Combustors		0.00	0.00	0.00	0.00	0.000	0.000	0.000	0.000	0.00	0.00	0.00	0.00
	Total		**0.37**	**1.6**	**0.31**	**1.4**	**0.002**	**0.01**	**0.03**	**0.12**	**57.79**	**151.6**	**7.70**	**29.9**

NOTES: a - Burner emissions based on EPA AP-42 emission factors from Section 1.4, Tables 1.4-1 and 1.4-2 for uncontrolled natural gas burners, it is assumed that burners operate 8,760 hours per year, and a fuel heating value of 1112.16 Btu/SCF

b - Pneumatic VOC/HAP emissions based on VOC/HAP fraction of the field gas, and consumption rates of typical equipment used in this field area.

c - Tank Truck Loading VOC/HAP emissions are calculated per Chapter 6, Section 2 Permitting Guidance for Oil and Gas Production Facilities set forth by the WDEQ. HAP emissions for Tank Truck Loading are calculated by using the ratio of condensate tank VOC and HAP emissions.

d - Fugitive emissions account for VOC/HAP vapors from connectors, valves, tank hatches, and relief vent/valves. Emission Factors derived from Chapter 6, Section 2 Permitting Guidance for Oil and Gas Production Facilities.

e - There is currently no standard emissions estimating method for produced water tanks, VOC/HAP emissions from this source are considered insignificant.

Company Name: **Jonah Energy LLC**
Field Name: **Jonah Field**
Facility Name: **Stud Horse Butte 1-33 - Baseline Calcs**

Wyoming Air Quality Application Emission Summary Sheet

Baseline Controlled Production Equipment Emissions

			NOx		CO		SO2		Particulates		VOC		Total HAPs	
Ref No.	**Equipment**	**Note**	**lb/hr**	**TPY**	**lb/hr**	**TPY**	**lb/hr**	**TPY**	**lb/hr**	**TPY**	**lb/hr**	**TPY**	**lb/hr**	**TPY**
001	(1) 0.175 MMBtu/hr TEG Reboiler	a	0.02	0.08	0.02	0.07	0.000	0.000	0.001	0.006	0.000	0.001	0.000	0.000
002	(1) 0.175 MMBtu/hr TEG Reboiler	a	0.02	0.08	0.02	0.07	0.000	0.000	0.001	0.006	0.000	0.001	0.000	0.000
003	(1) 0.085 MMBtu/hr TEG Reboiler	a	0.01	0.04	0.01	0.03	0.000	0.000	0.001	0.003	0.000	0.000	0.000	0.000
004	(1) 0.085 MMBtu/hr Flash Tank Heater	a	0.01	0.04	0.01	0.03	0.000	0.000	0.001	0.003	0.000	0.000	0.000	0.000
005	(1) 0.085 MMBtu/hr Flash Tank Heater	a	0.01	0.04	0.01	0.03	0.000	0.000	0.001	0.003	0.000	0.000	0.000	0.000
006	(1) 0.085 MMBtu/hr Flash Tank Heater	a	0.01	0.04	0.01	0.03	0.000	0.000	0.001	0.003	0.000	0.000	0.000	0.000
007	(1) 1.0 MMBtu/hr Indirect Heater	a	0.11	0.47	0.09	0.39	0.001	0.003	0.008	0.036	0.001	0.005	0.000	0.000
008	(1) 1.0 MMBtu/hr Indirect Heater	a	0.11	0.47	0.09	0.39	0.001	0.003	0.008	0.036	0.001	0.005	0.000	0.000
009	(1) 0.75 MMBtu/hr Indirect Heater	a	0.08	0.35	0.07	0.29	0.000	0.002	0.006	0.027	0.001	0.004	0.000	0.000
010	(1) 10 MMSCFD TEG Dehydration Unit		0.00	0.00	0.00	0.00	0.000	0.000	0.000	0.000	0.07	0.30	0.02	0.07
011	(1) 10 MMSCFD TEG Dehydration Unit		0.00	0.00	0.00	0.00	0.000	0.000	0.000	0.000	0.07	0.30	0.02	0.07
012	(1) 4 MMSCFD TEG Dehydration Unit		0.00	0.00	0.00	0.00	0.000	0.000	0.000	0.000	0.03	0.13	0.01	0.03
013	(2) 400 bbl Condensate Tanks		0.00	0.00	0.00	0.00	0.000	0.000	0.000	0.000	0.16	0.71	0.006	0.03
014	Pneumatics (Pumps and Liquid Level Controllers)	b	0.00	0.00	0.00	0.00	0.000	0.000	0.000	0.000	11.99	39.5	0.43	1.40
015	Tank Truck Loading	c	0.00	0.00	0.00	0.00	0.000	0.000	0.000	0.000	20.29	0.45	0.77	0.02
016	Fugitives	d	0.00	0.00	0.00	0.00	0.000	0.000	0.000	0.000	1.40	6.11	0.15	0.64
017	(1) 400 bbl Produced Water Tanks	e	0.00	0.00	0.0	0.00	0.000	0.000	0.000	0.000	Insignificant			
018	Enclosed Combustors		0.12	0.53	0.03	0.13	0.000	0.000	0.000	0.000	0.00	0.00	0.00	0.00
	Total		**0.49**	**2.1**	**0.34**	**1.5**	**0.002**	**0.01**	**0.03**	**0.12**	**34.0**	**47.5**	**1.39**	**2.26**

NOTES: a - Burner emissions based on EPA AP-42 emission factors from Section 1.4, Tables 1.4-1 and 1.4-2 for uncontrolled natural gas burners, it is assumed that burners operate 8,760 hours per year, and a fuel heating value of 1112.16 Btu/SCF

b - Pneumatic VOC/HAP emissions based on VOC/HAP fraction of the field gas, and consumption rates of typical equipment used in this field area. Emissions based on 98% destruction efficiency as vapors are routed to combustor.

c - Tank Truck Loading VOC/HAP emissions are calculated per Chapter 6, Section 2 Permitting Guidance for Oil and Gas Production Facilities set forth by the WDEQ. HAP emissions for Tank Truck Loading are calculated by using the ratio of condensate tank VOC and HAP emissions.

d - Fugitive emissions account for VOC/HAP vapors from connectors, valves, tank hatches, and relief vent/valves. Emission Factors derived from Chapter 6, Section 2 Permitting Guidance for Oil and Gas Production Facilities.

e - There is currently no standard emissions estimating method for produced water tanks, VOC/HAP emissions from this source are considered insignificant.

f - Emissions are based on 98% destruction efficiency for flash tank, regenerator, and condensate tank vapors, and pneumatic pump motive gas exhaust.

g - Combustor emissions account for pilot gas and NOx,CO,and SO2 emissions from all controlled sources. The controlled VOC and HAP emissions have been allocated back to the individual contributing source.

Company Name: **Jonah Energy LLC**
Field Name: **Jonah Field**
Facility Name: **Stud Horse Butte 1-33 - Baseline Calcs**

Gas Analysis Calculation Sheet

Based on: **Jonah Composite**
Date of Sample: NA
Temp: 67 F
Pressure: 227 psig

							LHV BTU Content		HHV BTU Content	
Component	**Mole %**	**Mole Frac.**	**MW**	**Lb/Lb mole**	**VOC**	**HAP**	**Btu/scf**	**Btu/scf*Mole Frac**	**Btu/scf**	**Btu/scf*Mole Frac**
Carbon Dioxide	0.6663	0.0067	44.01	0.29			0.0	0.00	0.0	0.00
Hydrogen Sulfide	0.0000	0.0000	34.08	0.00			586.8	0.00	637.1	0.00
Nitrogen	0.2502	0.0025	28.02	0.07			0.0	0.00	0.0	0.00
Methane	90.1348	0.9013	16.04	14.46			909.4	819.69	1010.0	910.36
Ethane	5.4990	0.0550	30.07	1.65			1618.7	89.01	1769.6	97.31
Propane	1.9710	0.0197	44.09	0.87	0.87		2314.9	45.63	2516.1	49.59
Isobutane	0.4483	0.0045	58.12	0.26	0.26		3000.4	13.45	3251.9	14.58
n-butane	0.4514	0.0045	58.12	0.26	0.26		3010.8	13.59	3262.3	14.73
Isopentane	0.1823	0.0018	72.15	0.13	0.13		3699.0	6.74	4000.9	7.29
n-pentane	0.1277	0.0013	72.15	0.09	0.09		3706.9	4.73	4008.9	5.12
Cyclopentane	0.0000	0.0000	70.08	0.00	0.00		3512.2	0.00	3763.4	0.00
n-hexane	0.0443	0.0004	86.18	0.04	0.04	0.04	4404.1	1.95	4750.2	2.11
Cyclohexane	0.0263	0.0003	84.18	0.02	0.02		4179.9	1.10	4481.2	1.18
Other Hexanes	0.0801	0.0008	86.18	0.07	0.07		4392.7	3.52	4744.5	3.80
Heptanes	0.0428	0.0004	100.21	0.04	0.04		5100.3	2.18	5500.4	2.35
Methylcyclohexane	0.0323	0.0003	98.19	0.03	0.03		4863.9	1.57	5215.7	1.69
2,2,4-Trimethylpentane	0.0036	0.0000	114.22	0.00	0.00	0.00	5779.1	0.21	6231.5	0.22
Benzene	0.0134	0.0001	78.11	0.01	0.01	0.01	3591.1	0.48	3741.5	0.50
Toluene	0.0129	0.0001	92.14	0.01	0.01	0.01	4273.7	0.55	4474.5	0.58
Ethylbenzene	0.0002	0.0000	106.17	0.00	0.00	0.00	4970.7	0.01	5221.7	0.01
Xylenes	0.0019	0.0000	106.17	0.00	0.00	0.00	4957.4	0.09	5208.4	0.10
C8+Heavies	0.0110	0.0001	315.00	0.03	0.03		5796.3	0.64	5794.1	0.64
Totals	**100.0000**	**1.0000**		**18.36**	**1.88**	**0.07**		**1005.16**		**1112.16**

Weight Fraction of Vapors that are VOC: **0.103**
Weight Fraction of Vapors that are HAP: **0.004**

Company Name: **Jonah Energy LLC**
Field Name: **Jonah Field**
Facility Name: **Stud Horse Butte 1-33 - Baseline Calcs**

Emission Calculation for External Combustion Sources

AP-42 Calculation Method

(For Estimating Emissions, Using Emission Factors from EPA AP-42, Table 1.4-1 and Table 1.4-2)

Burner Data

Reference No.	Burner Rating (MMBtu/Hr)	Equipment	Annual Op Time (hours)	Fuel Type	Fuel Htg Value (Btu/scf)	Weight Fraction VOC [1]
001	0.175	(1) 0.175 MMBtu/hr TEG Reboiler	8760	Field	1112	0.10
002	0.175	(1) 0.175 MMBtu/hr TEG Reboiler	8760	Field	1112	0.10
003	0.085	(1) 0.085 MMBtu/hr TEG Reboiler	8760	Field	1112	0.10
004	0.085	(1) 0.085 MMBtu/hr Flash Tank Heater	8760	Field	1112	0.10
005	0.085	(1) 0.085 MMBtu/hr Flash Tank Heater	8760	Field	1112	0.10
006	0.085	(1) 0.085 MMBtu/hr Flash Tank Heater	8760	Field	1112	0.10
007	1.000	(1) 1.0 MMBtu/hr Indirect Heater	8760	Field	1112	0.10
008	1.000	(1) 1.0 MMBtu/hr Indirect Heater	8760	Field	1112	0.10
009	0.750	(1) 0.75 MMBtu/hr Indirect Heater	8760	Field	1112	0.10

1 - Weight Fraction of VOC is derived from the fuel gas analysis (MW_{VOC}/MW_{TOTAL})

Emission Factors

Reference No.	Burner Rating (MMBtu/Hr)	Emission Factors					
		NOx (Lb/MMFt^3)	CO (Lb/MMFt^3)	SO_2 (Lb/MMFt^3)	PM (Lb/MMFt^3)	TOC [2] (Lb/MMFt^3)	VOC [3] (Lb/MMFt^3)
001	0.175	100.0	84.0	0.6	7.6	11.0	1.1
002	0.175	100.0	84.0	0.6	7.6	11.0	1.1
003	0.085	100.0	84.0	0.6	7.6	11.0	1.1
004	0.085	100.0	84.0	0.6	7.6	11.0	1.1
005	0.085	100.0	84.0	0.6	7.6	11.0	1.1
006	0.085	100.0	84.0	0.6	7.6	11.0	1.1
007	1.000	100.0	84.0	0.6	7.6	11.0	1.1
008	1.000	100.0	84.0	0.6	7.6	11.0	1.1
009	0.750	100.0	84.0	0.6	7.6	11.0	1.1
EF Source		AP-42	AP-42	AP-42	AP-42	AP-42	Estimate

2- Total Organic Compunds (TOC)
3 - VOC emission factor determined by taking TOC factor times fraction of fuel gas that was VOC.

Emissions (Lb/Hr) = E.F. (Lb/MMft^3) * FHV/1020 * Burner Rating (MMbtu/Hr) * 1/1020 (btu/scf) * 1 MMft3/1x10^6 ft^3 * 1x10^6 Btu/MMbtu

Emissions (TPY) = Emissions (Lb/Hr) * Annual Operating Time (Hr/Yr) * 1 ton/2,000 Lb

Source Emissions

Reference No.	Source Emissions									
	NOx		CO		SO_2		PM		VOC	
	(Lb/Hr)	(TPY)	(Lb/Hr)	(TPY)	(Lb/Hr)	(TPY)	(Lb/Hr)	(TPY)	(Lb/Hr)	(TPY)
001	0.02	0.08	0.02	0.07	0.0001	0.0005	0.0014	0.0062	0.0002	0.0009
002	0.02	0.08	0.02	0.07	0.0001	0.0005	0.0014	0.0062	0.0002	0.0009
003	0.01	0.04	0.01	0.03	0.0001	0.0002	0.0007	0.0030	0.0001	0.0004
004	0.01	0.04	0.01	0.03	0.0001	0.0002	0.0007	0.0030	0.0001	0.0004
005	0.01	0.04	0.01	0.03	0.0001	0.0002	0.0007	0.0030	0.0001	0.0004
006	0.01	0.04	0.01	0.03	0.0001	0.0002	0.0007	0.0030	0.0001	0.0004
007	0.11	0.47	0.09	0.39	0.0006	0.0028	0.0081	0.0356	0.0012	0.0053
008	0.11	0.47	0.09	0.39	0.0006	0.0028	0.0081	0.0356	0.0012	0.0053
009	0.08	0.35	0.07	0.29	0.0005	0.0021	0.0061	0.0267	0.0009	0.0040

Company Name:	**Jonah Energy LLC**
Field Name:	**Jonah Field**
Facility Name:	**Stud Horse Butte 1-33 - Baseline Calcs**

Dehydration Unit Emissions Analysis Sheet

Uncontrolled Dehydration Unit Emissions

Annual Rate	**VOC**		**HAPS**	
2.8 MMSCFD	**lb/hr**	**TPY**	**lb/hr**	**TPY**
10MM Regenerator Emissions	4.64	20.3	2.34	10.2
10MM Flash Tank Emissions	1.93	8.4	0.15	0.7
10MM Regenerator Emissions	4.64	20.3	2.34	10.2
10MM Flash Tank Emissions	1.93	8.4	0.15	0.7
4MM Regenerator Emissions	2.02	8.8	1.00	4.4
4MM Flash Tank Emissions	0.86	3.8	0.07	0.3
TOTAL				
(1) 10 MMSCFD TEG Dehydration Unit	**6.57**	**28.8**	**2.49**	**10.9**
(1) 10 MMSCFD TEG Dehydration Unit	**6.57**	**28.8**	**2.49**	**10.9**
(1) 4 MMSCFD TEG Dehydration Unit	**2.88**	**12.6**	**1.06**	**4.7**

Controlled Dehydration Unit Emissions*

Annual Rate	**VOC**		**HAPS**	
2.8 MMSCFD	**lb/hr**	**TPY**	**lb/hr**	**TPY**
10MM Regenerator Emissions	0.03	0.1	0.01	0.06
10MM Flash Tank Emissions	0.04	0.2	0.003	0.01
10MM Regenerator Emissions	0.03	0.1	0.01	0.06
10MM Flash Tank Emissions	0.04	0.2	0.003	0.01
4MM Regenerator Emissions	0.01	0.06	0.01	0.03
4MM Flash Tank Emissions	0.02	0.1	0.001	0.01
TOTAL				
(1) 10 MMSCFD TEG Dehydration Unit	**0.07**	**0.30**	**0.02**	**0.07**
(1) 10 MMSCFD TEG Dehydration Unit	**0.07**	**0.30**	**0.02**	**0.07**
(1) 4 MMSCFD TEG Dehydration Unit	**0.03**	**0.13**	**0.01**	**0.03**

*Combustor has destruction efficiency of 98%. The Dehydration Unit has a condenser and regenerator, therefore the over all control efficiency is greater than 98%.

Company Name:	Jonah Energy LLC
Field Name:	Jonah Field
Facility Name:	Stud Horse Butte 1-33 - Baseline Calcs

Condensate Storage Tank Emissions Calculations

Uncontrolled Storage Tank Emissions

Annual Rate (BCPD)	29.0	
	lb/hr	TPY
Stock Tank VOC Flash Vent Gas	7.93	34.7
Tanks 4.0 W & B VOC Vent Gas	0.18	0.8
Total Stock Tank VOC Vent Gas	**8.11**	**35.5**
Stock Tank HAPs Flash Gas	**0.31**	**1.36**

User needs to in put data
Data calculated from Promax

Controlled Storage Tank Emissions*

Annual Rate (BCPD)	29.0	
	lb/hr	TPY
Stock Tank VOC Flash Vent Gas	0.16	0.7
Tanks 4.0 W & B VOC Vent Gas	0.004	0.02
Total Stock Tank VOC Vent Gas	**0.16**	**0.71**
Stock Tank HAPs Flash Gas	**0.01**	**0.03**

*Combustor has destruction efficiency of 98%.

Model Inputs		
Sample Temperature	66.67	oF
Sample Pressure	239	psia
Std Liquid Volumetric Flow	29	bbl/d
Number of Tanks	2	
Tank Size	400	BBL
Tank Temperature	45	oF
Tank Pressure	12	psia

Flash Tank Emission Calculation

Calculated VOC and HAP Emissions, Using Promax

Flash Gas Promax Output

Component	Mass Flow (lb/hr)	TPY
Methane	4.82	21.1
Ethane	2.59	11.4
Propane	2.98	13.1
Isobutane	1.20	5.2
n-butane	1.46	6.4
Neopentane	0.01	0.1
Isopentane	0.69	3.0
n-pentane	0.51	2.2
2,2 Dimethylbutane	0.03	0.1
2,3 Dimethylbutane	0.07	0.3
2-Methylpentane	0.16	0.7
3-Methylpentane	0.09	0.4
n-hexane	0.11	0.5
Heptanes	0.33	1.4
Octanes	0.06	0.2
Nonanes	0.02	0.1
Decanes Plus	0.01	0.1
Nitrogen	0.01	0.0
Carbon Dioxide	0.21	0.9
Benzene	0.06	0.3
Toluene	0.07	0.3
Ethylbenzene	0.00	0.0
M &P Xylenes	0.02	0.1
O-Xylenes	0.00	0.0
2,2,4-Trimethylpentane	0.04	0.2
TOTAL	**15.6**	**68.2**

STD Gas Flow	
0.0049	MMSCFD
202.57	SCFHR

API Gravity
64.68

TOTAL Flash Emissions		
	lb/hr	TPY
VOC	**7.93**	**34.7**
HAPS	**0.3**	**1.4**

VOC Flash Gas (lb/hr) = Total Flash Gas (lb/hr) - Non-VOC Components (lb/hr)
VOC Flash Gas (TPY) = VOC Flash Gas (lb/hr) * 8760 hrs/yr * 1 ton/2000 lbs
HAP Flash Gas (lb/hr) = Sum of HAP components (lb/hr)
HAP Flash Gas (TPY) = HAP Flash Gas (lb/hr) * 8760 hrs/yr * 1 ton/2000 lbs

Component	Mol %	Normalized	Mol Frac
Methane	9.24446	9.2445	0.09
Ethane	3.0519	3.0519	0.03
Propane	3.53456	3.5346	0.04
i-Butane	1.91326	1.9133	0.02
n-Butane	3.10256	3.1026	0.03
Propane, 2,2-Dimethyl-	0.03224	0.0322	0.00
i-Pentane	2.8428	2.8428	0.03
n-Pentane	2.85142	2.8514	0.03
Butane, 2,2-Dimethyl-	0.19142	0.1914	0.00
Butane, 2,3-Dimethyl-	0.71348	0.7135	0.01
Pentane, 2-Methyl-	1.94474	1.9447	0.02
Pentane, 3-Methyl-	1.17562	1.1756	0.01
n-Hexane	3.19008	1.9725	0.02
n-Heptane	20.96502	16.2393	0.16
n-Octane	15.5326	8.8870	0.09
n-Nonane	11.58426	11.5843	0.12
n-Decane	17.9626	17.9626	0.18
Nitrogen	0.01098	0.0110	0.00
CO2	0.15588	0.1559	0.00
Benzene	1.21758	1.2176	0.01
Toluene	4.72568	4.7257	0.05
Ethylbenzene	0.47268	0.4727	0.00
m-Xylene	3.94074	3.9407	0.04
o-Xylene	0.73086	0.7309	0.01
Pentane, 2,2,4-Trimethyl-	1.5013	1.5013	0.02
Total	**112.5887**	**99.9999**	**1.0000**

Calculation for Working and Breathing Losses

Calculated VOC Emissions, Using Promax

Size of Tank (bbl)	No. Tanks	Material Category
400	2	Light Organics

STD Gas Flow	
7.39E-06	MMSCFD
0.31	SCFHR

Working Losses (lb/yr/tank)	Working Losses (lb/yr)	Breathing Losses (lb/yr/tank)	Breathing Losses (lb/yr)	Working Losses (TPY)	Breathing Losses (TPY)	Total Losses (lb/hr)	Total Losses (TPY)
90	179.78	688.40	1376.80	0.09	0.69	**0.18**	**0.8**

Total Losses = Working Losses + Breathing Losses

Tank Inputs				
Shell Height	20	ft	Max % Fill	97.5%
Shell Diameter	12	ft	Avg % Fill	50.0%
Max Liquid Height	19.5	ft		
Average Liquid Height	10	ft		
Throughput	444,570	gal/yr		
Heated	NO			
Shell Color/Shade	Medium Grey		**Site Selection**	
Shell Condition	Good		Cheyenne, WY	
Roof Color/Shade	Medium Grey		**Tank Contents**	
Roof Condition	Good		Light Organics	
Type	Cone			
	0.5	ft		
Slope	0.08	ft/ft		
Vacuum Setting	-0.03	psig		
Pressure Setting	0.25	psig		

- Working losses (lb/yr) and Breathing losses (lb/yr/tank) from Promax output.
  Working Losses are the VOC emissions resulting from hydrocarbon liquid levels rising and falling as fluid enters and leaves the tank, causing the gas blanket to be vented and replaced.
  Breathing Losses are the VOC emissions resulting from the evaporation/weathering of the hydrocarbon liquid during storage.
  Losses (TPY) = Losses (Lb/Yr) * 1 ton/2,000 lb.
  Losses (Lb/Hr) = Losses (TPY) * 2,000 Lb/1 ton * 1 Yr/8,760 Hr

Company Name: **Jonah Energy LLC**
Field Name: **Jonah Field**
Facility Name: **Stud Horse Butte 1-33 - Baseline Calcs**

Pneumatic Equipment Emission Calculations

Uncontrolled Pneumatic Equipment Emissions

Reference No.	Component Description	Quantity	Manufacturer	Model	Consumption Rate (scfh)	Hours of Operation	VOC fraction of instrument gas	HAP fraction of instrument gas	VOC Emission (lb/hr)	VOC Emission (TPY)	HAP Emission (lb/hr)	HAP Emission (TPY)
014	Chemical Pump (Methanol, etc.)	0	Varies	5000	50	8760	0.10	0.0036	0.00	0.0	0.00	0.0
014	Double Diaphram Glycol Circulation (Heat Trace)	2	Varies	1040	600	4380	0.10	0.0036	5.96	13.0	0.21	0.5
014	Pneumatic Controllers	27	Varies	6900	45	8760	0.10	0.0036	6.03	26.4	0.21	0.9
									11.99	**39.45**	**0.43**	**1.40**

NOTES: - Pnuematic pump make, model, and consumption rate are estimated
- Pump hours of operation are based on equipment operating for one-half of the year, assumed shut-down during warmer months.
- Pneumatic controller make, model are representative of field equipment; consumption rate is assumed 6 scfh for low bleed, no bleed controllers; high low controller units, liquid level controllers and BTEX pot dumps are included

Company Name: **Jonah Energy LLC**
Field Name: **Jonah Field**
Facility Name: **Stud Horse Butte 1-33 - Baseline Calcs**

Volatile Organic Compound Emission Calculation for Truck Loading

LL= 12.46 * S P M /T

LL = Loading loss (Lb/1,000 gal.), of liquid loaded
S = Saturation factor (from AP-42 Table 5.2-1)
P = True vapor pressure of liquid loaded (psia), (from AP-42 Table 7.1-2)
M = Molecular weight of vapors (Lb/Lb-mole)
T = Temperature of liquid loaded (0R = 460 + 0F)

S= 0.6 (For dedicated Hydrocarbon service)
P= 2.8 True Vapor Pressure (psia) @ T=60 for a RVP=10 fluid
M= 50 Lb/Lb-mole (from composition of vapor phase as per Tanks 4.09)
T= 60 0F or 520 0R

LL= 2.0128 Lb/1,000 gal. Loaded

-For a facility making: 10,585 bbl/yr or 29 bbl/day

Uncontrolled Tank Truck Loading Emissions

LL (TPY) = LL (Lb/1,000 gal) * annual production (bbl/yr) * 42 gal/bbl * 1ton/2000Lbs

Truck Loadout Emissions = 0.4 TPY of VOC

LL (lb/hr) = LL (Lb/1,000 gal) * 240 bbl tank truck * 42 gal/bbl * 1 hr loadout duration

Truck Loadout Emissions = 20.29 lb/hr of VOC

Truck Loadout Emissions = 0.02 TPY of HAP

Truck Loadout Emissions = 0.77 lb/hr of HAP

Company Name: **Jonah Energy LLC**
Field Name: **Jonah Field**
Facility Name: **Stud Horse Butte 1-33 - Baseline Calcs**

Fugitives Emission Calculation

Equipment Leak Emission Estimates for Oil and Gas Production Operations

Factors are taken from O&G Production Facilities Permitting Guidance

Component Type	Equipment Service Category			
	Gas (lbs/component/day)	Heavy Oil3 (<20 API Gravity) (lbs/component/day)	Light Oil (>20 API Gravity) (lbs/component/day)	Water/Light Oil (lbs/component/day)
Connectors	1.10E-02	4.00E-04	1.10E-02	5.80E-03
Flanges	2.10E-02	2.10E-05	5.80E-03	1.50E-04
Open-ended Lines	1.10E-01	7.40E-03	7.40E-02	1.30E-02
Other1	4.70E-01	1.70E-03	4.00E-01	7.40E-01
Pumps	1.30E-01	Not avaliable	6.90E-01	1.30E-03
Valves	2.40E-01	4.40E-04	1.30E-01	5.20E-03

- All factors are for total organic compound emission rates (includes non-VOC's such as methane and ethane).
1 - "Other" equipment type includes compressors, pressure relief valves, relief valves, diaphrams, drains, dump arms, hatches, instruments, meters, polished rods and vents.
2 - Water/Light Oil factors apply to water streams in oil service with a water content greater than 50% to less than 99%. For streams with water content greater than 99%, the emission rate is considered negligable.
3 - The emission factor for pumps was not derived in the actual protocol, the factor for "other" has been substituted for completeness.

INPUTS:

List the quantity of each type of component in each type of service at the applicant's facility:

Component Type	Equipment Service Category			
	Gas	Heavy Oil (<20 API Gravity)	Light Oil (>20 API Gravity)	Water/Light Oil
Connectors	**4251**	**0**	**533**	**1791**
Flanges	**161**	**0**	**0**	**1**
Open-ended Lines	**43**	**0**	**0**	**0**
Other1	**837**	**0**	**0**	**40**
Pumps	**4**	**0**	**0**	**11**
Valves	**319**	**0**	**40**	**122**

NOTE: The component count is an estimate only.

Sample Calculation:

TOC (TPY) = component quantity * component factor * 365 day/yr * 1 ton/2,000 lb
VOC (TPY) = TOC* Estimated Weight fraction From Permitting Guidance

Component Type	Equipment Service Category			
	Gas (TPY of TOC)	Heavy Oil (<20 API Gravity) (TPY of TOC)	Light Oil (>20 API Gravity) (TPY of TOC)	Water/Light Oil (TPY of TOC)
Connectors	8.53	0.00	1.07	1.90
Flanges	0.62	0.00	0.00	0.00
Open-ended Lines	0.86	0.00	0.00	0.00
Other1	71.79	0.00	0.00	5.40
Pumps	0.09	0.00	0.00	0.00
Valves	13.97	0.00	0.95	0.12
TOTAL	**95.875**	**0.000**	**2.019**	**7.416**
Weight VOC Fraction	0.035	0.030	0.292	0.292
Weight HAP Fraction	0.004	0.025	0.026	0.026
TPY VOC	**3.36**	**0.00**	**0.59**	**2.17**
lb/hr VOC	0.77	0.00	0.13	0.49
TPY HAP	**0.40**	**0.00**	**0.05**	**0.19**
lb/hr HAP	0.09	0.00	0.01	0.04

	Source	VOC		HAP		
		(lb/hr)	(TPY)	(lb/hr)	(TPY)	
016	Fugitives	**1.40**	**6.11**	**0.15**	**0.64**	**0.0% Reduction**

*A 75% reduction in fugutive emissions has been applied due to the Enhanced Directed Inspection & Maintenance (EDI&M) Program.

Company Name:	**Jonah Energy LLC**
Field Name:	**Jonah Field**
Facility Name:	**Stud Horse Butte 1-33 - Baseline Calcs**

Wyoming Air Quality Standards and Regulations

Enclosed Flare Emission Analysis Worksheet

(Based on Office of Air Quality Planning and Standards, EPA, AP-42 Manual, Fifth Edition, January 1995, Section 13.5)

Reference No.	Source with vapors sent to the Combustion Chamber	Vapor Volume (SCFD)	Vapor Heating Value (Btu/scf)	H2S Content (%)	NOx (lb/hr)	NOx (TPY)	CO (lb/hr)	CO (TPY)	SO2 (lb/hr)	SO2 (TPY)
	Condensate Tank Vent [1]	4869	1704	0	0.05	0.21	0.01	0.05	0.00	0.0
010	10 MMSCFD Dehydration Unit	40	2369	0	0.001	0.002	0.000	0.001	0.00	0.0
011	10 MMSCFD Dehydration Unit	40	2369	0	0.001	0.002	0.000	0.001	0.00	0.0
012	4 MMSCFD Dehydration Unit	214	2353	0	0.00	0.01	0.001	0.003	0.00	0.0
010	10 MMSCFD Flash Tank	3432	1237	0	0.02	0.11	0.01	0.03	0.00	0.0
011	10 MMSCFD Flash Tank	3432	1237	0	0.02	0.11	0.01	0.03	0.00	0.0
012	4 MMSCFD Flash Tank	1534	1237	0	0.01	0.05	0.003	0.01	0.00	0.0
018	Pilot Gas	1200	1112	0	0.01	0.03	0.00	0.01	0.00	0.0
	Total	**14759.4**			**0.12**	**0.5**	**0.03**	**0.13**	**0.00**	**0.00**

NOTES: 1 - Enclosed flare NOx and CO emissions based on continuous operation, using emission factors requested by WDEQ in O&G Production Facilities C6S2 Guidance, Appendix B13.

Reference No.	Source with vapors sent to the Combustion Chamber	Vapor Volume (SCFD)	Vapor Heating Value (Btu/scf)	PM Emission (lb/hr)	PM Emission (TPY)	VOC Emission (lb/hr)	VOC Emission (TPY)	HAP Emission (lb/hr)	HAP Emission (TPY)
018	Pilot Gas	1200	1112	0.00	0.00	0.0001	4.6E-10	0.00	0.00

Jonah Field Condensate Composite

Description	Stud Horse Butte 01-29 CF	Cabrito 08-25 CF	Stud Horse Butte 02-28 CF	Stud Horse Butte 15-27	SAG 34-19 CF	Jonah Composite	
Field	Jonah	Jonah	Jonah	Jonah	Jonah		
Analysis Date/Time	07/27/2011	07/27/2011	07/27/2011	07/27/2011	07/27/2011		
Sample Temerature	N/A	67	69	N/A	64	**66.67**	**F**
Sample Pressure	220	250	220	225	250	**233**	**psig**
Date Sampled	7/25/2011	07/26/2011	07/25/2011	07/25/2011	07/26/2011		
Componet	**Mol%**	**Mol%**	**Mol%**	**Mol%**	**Mol%**	**Mol%**	
Methane	6.5398	7.2487	19.9695	6.3631	6.1012	**9.2445**	
Ethane	2.8830	3.2441	3.1402	2.7213	3.2709	**3.0519**	
Propane	3.2394	4.0447	2.6308	3.1956	4.5623	**3.5346**	
Isobutane	1.7487	2.2678	1.3451	1.7447	2.4600	**1.9133**	
n-Butane	2.8063	3.7852	2.1382	2.7343	4.0488	**3.1026**	
Neopentane	0.0384	0.0498	0.0000	0.0296	0.0434	**0.0322**	
Isopentane	2.6121	3.1645	2.3392	2.6150	3.4832	**2.8428**	
n-Pentane	2.6610	3.2181	2.1999	2.6119	3.5662	**2.8514**	
2,2-Dimethylbutane	0.2030	0.2055	0.1622	0.1899	0.1965	**0.1914**	
2,3-Dimethylbutane	0.7150	0.7912	0.5361	0.7268	0.7983	**0.7135**	
2-Methylpentane	1.9322	2.1455	1.6170	1.9161	2.1129	**1.9447**	
3-Methylpentane	1.1840	1.2842	0.9742	1.1768	1.2589	**1.1756**	
n-Hexane	3.2065	3.4524	2.6654	3.1975	3.4286	**3.1901**	
Heptanes	21.9287	21.0746	19.5222	22.6729	19.6267	**20.9650**	
Octanes	16.1150	15.2336	14.7932	17.9609	13.5603	**15.5326**	
Nonanes	12.1312	11.1473	11.1167	13.3825	10.1436	**11.5843**	
Decanes plus	19.9385	17.4769	14.6206	16.6056	21.1714	**17.9626**	
Nitrogen	0.0083	0.0091	0.0156	0.0219	0.0000	**0.0110**	
Carbon Dioxide	0.1086	0.1571	0.2139	0.1336	0.1662	**0.1559**	
Total	99.9997	100.0003	100.0000	100.0000	99.9994	99.9999	
Componet							
Benzene	1.2441	1.3412	1.1014	1.3471	1.0541	**1.2176**	
Toluene	4.6147	4.8111	4.4587	5.7550	3.9889	**4.7257**	
Ethylbenzene	0.4788	0.4700	0.4461	0.5557	0.4128	**0.4727**	
M&P Xylene	4.0059	3.7155	3.7671	4.7846	3.4306	**3.9407**	
O-Xylene	0.7322	0.7187	0.6751	0.8526	0.6757	**0.7309**	
2,2,4-Trimethylpentane	1.5487	1.5344	1.3710	1.6230	1.4294	**1.5013**	

GRI E&P TANK INFORMATION						
Component	**Mol%**	**Mol%**	**Mol%**	**Mol%**	**Mol%**	**Mol%**
H2S	0.0000	0.0000	0.0000	0.0000	0.0000	**0.0000**
O2	0.0000	0.0000	0.0000	0.0000	0.0000	**0.0000**
CO2	0.1086	0.1571	0.2139	0.1336	0.1662	**0.1559**
N2	0.0083	0.0091	0.0156	0.0219	0.0000	**0.0110**
C1	6.5398	7.2487	19.9695	6.3631	6.1012	**9.2445**
C2	2.8830	3.2441	3.1402	2.7213	3.2709	**3.0519**
C3	3.2394	4.0447	2.6308	3.1956	4.5623	**3.5346**
IC4	1.7487	2.2678	1.3451	1.7447	2.4600	**1.9133**
NC4	2.8063	3.7852	2.1382	2.7343	4.0488	**3.1026**
IC5	2.6505	3.2143	2.3392	2.6446	3.5266	**2.8750**
NC5	2.6610	3.2181	2.1999	2.6119	3.5662	**2.8514**
Hexanes	4.0342	4.4264	3.2895	4.0096	4.3666	**4.0253**
Heptanes	20.6846	19.7334	18.4208	21.3258	18.5726	**19.7474**
Octanes	9.9516	8.8881	8.9635	10.5829	8.1420	**9.3056**
Nonanes	6.9143	6.2431	6.2284	7.1896	5.6245	**6.4400**
Benzene	1.2441	1.3412	1.1014	1.3471	1.0541	**1.2176**
Toluene	4.6147	4.8111	4.4587	5.7550	3.9889	**4.7257**
E-Benzene	0.4788	0.4700	0.4461	0.5557	0.4128	**0.4727**
Xylene	4.7381	4.4342	4.4422	5.6372	4.1063	**4.6716**
n-C6	3.2065	3.4524	2.6654	3.1975	3.4286	**3.1901**
2,2,4-Trimethylpentane	1.5487	1.5344	1.3710	1.6230	1.4294	**1.5013**
C10 Plus						
C10 Mole %	19.9385	17.4769	14.6206	16.6056	21.1714	**17.9626**
Total	99.9997	100.0003	100.0000	100.0000	99.9994	99.9999

* Individual contributing analysis available upon request.

Jonah Field Wet Gas Composite

Description	Stud Horse Butte 01-29 CF	Cabrito 08-25 CF	Stud Horse Butte 2-28 CF	Stud Horse Butte 15-27 CF	SAG 34-19 CF	Jonah Composite	
Field	Jonah	Jonah	Jonah	Jonah	Jonah		
Analysis Date/Time	07/28/2011	07/27/2011	07/27/2011	07/27/2011	07/27/2011		
Sample Temerature	N/A	67	69	68	64	**67.00**	**F**
Sample Pressure	200	250	220	225	240	**227**	**psig**
Date Sampled	7/25/2011	07/26/2011	07/25/2011	07/25/2011	07/26/2011		
Componet	**Mol%**	**Mol%**	**Mol%**	**Mol%**	**Mol%**	**Mol%**	
Methane	91.2359	89.3437	90.9345	90.3932	88.7667	**90.1348**	
Ethane	5.1393	5.8672	5.1822	5.3779	5.9286	**5.4990**	
Propane	1.6661	2.1827	1.6989	1.8852	2.4219	**1.9710**	
Isobutane	0.3732	0.4991	0.3888	0.4326	0.5478	**0.4483**	
n-Butane	0.3723	0.5010	0.3879	0.4282	0.5677	**0.4514**	
Neopentane	0.0081	0.0127	0.0096	0.0080	0.0076	**0.0092**	
Isopentane	0.1452	0.1895	0.1573	0.1695	0.2038	**0.1731**	
n-Pentane	0.1072	0.1397	0.1167	0.1235	0.1513	**0.1277**	
2,2-Dimethylbutane	0.0055	0.0062	0.0061	0.0060	0.0057	**0.0059**	
2,3-Dimethylbutane	0.0131	0.0170	0.0144	0.0151	0.0159	**0.0151**	
2-Methylpentane	0.0336	0.0434	0.0376	0.0382	0.0392	**0.0384**	
3-Methylpentane	0.0183	0.0234	0.0204	0.0207	0.0208	**0.0207**	
n-Hexane	0.0387	0.0500	0.0439	0.0454	0.0437	**0.0443**	
Heptanes	0.1192	0.1352	0.1334	0.1560	0.1132	**0.1314**	
Octanes	0.0092	0.0089	0.0097	0.0119	0.0072	**0.0094**	
Nonanes	0.0031	0.0032	0.0038	0.0048	0.0028	**0.0035**	
Decanes plus	0.0001	0.0002	0.0004	0.0003	0.0001	**0.0002**	
Nitrogen	0.202	0.2156	0.2811	0.2054	0.3469	**0.2502**	
Carbon Dioxide	0.5099	0.7613	0.5733	0.6781	0.8091	**0.6663**	
Oxygen	0.0000	0.0000	0.0000	0.0000	0.0000	**0.0000**	
Hydrogen Sulfide	0.0000	0.0000	0.0000	0.0000	0.0000	**0.0000**	
Total	100.0000	100.0000	100.0000	100.0000	100.0000	100.0000	
Componet							
Benzene	0.0117	0.0154	0.0145	0.0154	0.0102	**0.0134**	
Toluene	0.0109	0.0132	0.0132	0.0169	0.0104	**0.0129**	
Ethylbenzene	0.0002	0.0002	0.0003	0.0003	0.0002	**0.0002**	
M&P Xylene	0.0014	0.0015	0.0017	0.0023	0.0014	**0.0017**	
O-Xylene	0.0002	0.0002	0.0003	0.0003	0.0002	**0.0002**	
2,2,4-Trimethylpentane	0.0031	0.0038	0.0037	0.0041	0.0033	**0.0036**	
Cyclopentane	0.0000	0.0000	0.0000	0.0000	0.0000	**0.0000**	
Cyclohexane	0.0231	0.0281	0.0273	0.0290	0.0241	**0.0263**	
Methylcyclohexane	0.0295	0.0322	0.0336	0.0377	0.0286	**0.0323**	

GRI GlyCalc Information

Componet	**Mol%**	**Mol%**	**Mol%**	**Mol%**	**Mol%**	**Mol%**
Carbon Dioxide	0.5099	0.7613	0.5733	0.6781	0.8091	**0.6663**
Hydrogen Sulfide	0.0000	0.0000	0.0000	0.0000	0.0000	**0.0000**
Nitrogen	0.2020	0.2156	0.2811	0.2054	0.3469	**0.2502**
Methane	91.2359	89.3437	90.9345	90.3932	88.7667	**90.1348**
Ethane	5.1393	5.8672	5.1822	5.3779	5.9286	**5.4990**
Propane	1.6661	2.1827	1.6989	1.8852	2.4219	**1.9710**
Isobutane	0.3732	0.4991	0.3888	0.4326	0.5478	**0.4483**
n-Butane	0.3723	0.5010	0.3879	0.4282	0.5677	**0.4514**
Isopentane	0.1533	0.2022	0.1669	0.1775	0.2114	**0.1823**
n-Pentane	0.1072	0.1397	0.1167	0.1235	0.1513	**0.1277**
Cyclopentane	0.0000	0.0000	0.0000	0.0000	0.0000	**0.0000**
n-Hexane	0.0387	0.0500	0.0439	0.0454	0.0437	**0.0443**
Cyclohexane	0.0231	0.0281	0.0273	0.0290	0.0241	**0.0263**
Other Hexanes	0.0705	0.0900	0.0785	0.0800	0.0816	**0.0801**
Heptanes	0.0409	0.0425	0.0411	0.0529	0.0366	**0.0428**
Methylcyclohexane	0.0295	0.0322	0.0336	0.0377	0.0286	**0.0323**
2,2,4 Trimethylpentane	0.0031	0.0038	0.0037	0.0041	0.0033	**0.0036**
Benzene	0.0117	0.0154	0.0145	0.0154	0.0102	**0.0134**
Toluene	0.0109	0.0132	0.0132	0.0169	0.0104	**0.0129**
Ethylbenzene	0.0002	0.0002	0.0003	0.0003	0.0002	**0.0002**
Xylenes	0.0016	0.0017	0.0020	0.0026	0.0016	**0.0019**
C8+ Heavies	0.0106	0.0104	0.0116	0.0141	0.0083	**0.0110**
Oxygen	0.0000	0.0000	0.0000	0.0000	0.0000	**0.0000**
Total	100.0000	100.0000	100.0000	100.0000	100.0000	100.0000

* Individual contributing analysis available upon request.

Bryan Research & Engineering, Inc.

ProMax® 3.2

with

TSWEET® & PROSIM®

Copyright © BRE Group, Ltd. 2002-2013. All Rights Reserved.

Simulation Report

Project: EHS MODELS.PMX

Licensed to Jonah Energy LLC and Affiliates

Client Name: Jonah Energy LLC
Location: SHB 1-33 CDP-Baseline
Job:

ProMax Filename: S:\NORTH_ROCKIES\JONAH\OPERATIONS\FACILITIES\MODELING\EHS MODELS\EHS MODELS.PMX
ProMax Version: 3.2.13330.0
Simulation Initiated: 5/21/2015 10:53:02 AM

Bryan Research & Engineering, Inc.
Chemical Engineering Consultants
P.O. Box 4747 Bryan, Texas 77805
Office: (979) 776-5220
FAX: (979) 776-4818
mailto:sales@bre.com
http://www.bre.com/

Report Navigator can be activated via the ProMax Navigator Toolbar.
An asterisk (*), throughout the report, denotes a user specified value.
A question mark (?) after a value, throughout the report, denotes an extrapolated or approximate value.

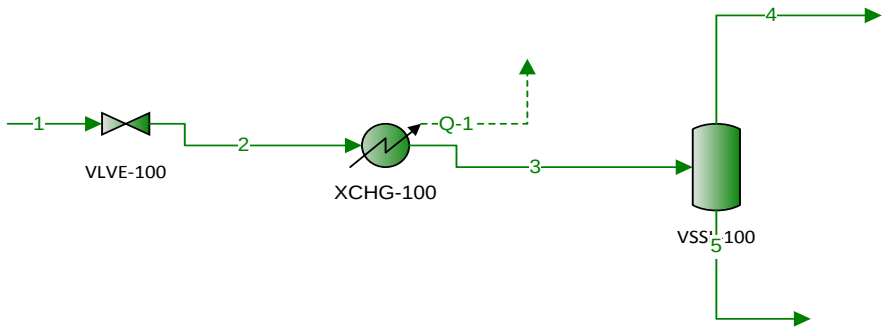

Tank Working and BreathingTank loss calculations for "3".

Process Streams		1	2	3	4	5
Composition	**Status:**	**Solved**	**Solved**	**Solved**	**Solved**	**Solved**
Phase: **Total**	**From Block:**	**--**	**VLVE-100**	**XCHG-100**	**VSSL-100**	**VSSL-100**
	To Block:	**VLVE-100**	**XCHG-100**	**VSSL-100**	**--**	**--**
Mole Fraction		**%**	**%**	**%**	**%**	**%**
Methane		9.24447*	9.24447	9.24447	56.3340	0.259520
Ethane		3.05190*	3.05190	3.05190	16.1477	0.553149
Propane		3.53456*	3.53456	3.53456	12.6759	1.79034
i-Butane		1.91326*	1.91326	1.91326	3.86092	1.54164
n-Butane		3.10256*	3.10256	3.10256	4.71506	2.79489
Propane, 2,2-Dimethyl-		0.0322400*	0.0322400	0.0322400	0.0375030	0.0312358
i-Pentane		2.84280*	2.84280	2.84280	1.78930	3.04382
n-Pentane		2.85142*	2.85142	2.85142	1.32385	3.14289
Butane, 2,2-Dimethyl-		0.191420*	0.191420	0.191420	0.0546911	0.217509
Butane, 2,3-Dimethyl-		0.713481*	0.713481	0.713481	0.146545	0.821655
Pentane, 2-Methyl-		1.94474*	1.94474	1.94474	0.352956	2.24846
Pentane, 3-Methyl-		1.17562*	1.17562	1.17562	0.189946	1.36369
n-Hexane		1.97250*	1.97250	1.97250	0.248970	2.30136
n-Heptane		16.2394*	16.2394	16.2394	0.611357	19.2213
n-Octane		8.88703*	8.88703	8.88703	0.0923424	10.5651
n-Nonane		11.5843*	11.5843	11.5843	0.0348182	13.7880
n-Decane		17.9626*	17.9626	17.9626	0.0156687	21.3870
Nitrogen		0.0109800*	0.0109800	0.0109800	0.0680902	8.30633E-05
CO2		0.155880*	0.155880	0.155880	0.902698	0.0133832
Benzene		1.21758*	1.21758	1.21758	0.146717	1.42191
Toluene		4.72569*	4.72569	4.72569	0.150318	5.59869
Ethylbenzene		0.472681*	0.472681	0.472681	0.00414933	0.562079
m-Xylene		3.94074*	3.94074	3.94074	0.0282300	4.68727
o-Xylene		0.730861*	0.730861	0.730861	0.00469261	0.869418
Pentane, 2,2,4-Trimethyl-		1.50130*	1.50130	1.50130	0.0635236	1.77564
Molar Flow		**lbmol/h**	**lbmol/h**	**lbmol/h**	**lbmol/h**	**lbmol/h**
Methane		0.307970*	0.307970	0.307970	0.300710	0.00726031
Ethane		0.101671*	0.101671	0.101671	0.0861961	0.0154749
Propane		0.117750*	0.117750	0.117750	0.0676637	0.0500866
i-Butane		0.0637383*	0.0637383	0.0637383	0.0206095	0.0431288
n-Butane		0.103359*	0.103359	0.103359	0.0251689	0.0781898
Propane, 2,2-Dimethyl-		0.00107404*	0.00107404	0.00107404	0.000200190	0.000873853
i-Pentane		0.0947050*	0.0947050	0.0947050	0.00955121	0.0851538
n-Pentane		0.0949922*	0.0949922	0.0949922	0.00706670	0.0879255
Butane, 2,2-Dimethyl-		0.00637696*	0.00637696	0.00637696	0.000291940	0.00608502
Butane, 2,3-Dimethyl-		0.0237689*	0.0237689	0.0237689	0.000782253	0.0229866
Pentane, 2-Methyl-		0.0647870*	0.0647870	0.0647870	0.00188407	0.0629030
Pentane, 3-Methyl-		0.0391646*	0.0391646	0.0391646	0.00101393	0.0381507
n-Hexane		0.0657118*	0.0657118	0.0657118	0.00132899	0.0643828
n-Heptane		0.540997*	0.540997	0.540997	0.00326341	0.537734
n-Octane		0.296062*	0.296062	0.296062	0.000492921	0.295569
n-Nonane		0.385918*	0.385918	0.385918	0.000185859	0.385732
n-Decane		0.598406*	0.598406	0.598406	8.36390E-05	0.598322
Nitrogen		0.000365788*	0.000365788	0.000365788	0.000363464	2.32378E-06
CO2		0.00519298*	0.00519298	0.00519298	0.00481858	0.000374407
Benzene		0.0405624*	0.0405624	0.0405624	0.000783172	0.0397793
Toluene		0.157431*	0.157431	0.157431	0.000802395	0.156629
Ethylbenzene		0.0157469*	0.0157469	0.0157469	2.21490E-05	0.0157247
m-Xylene		0.131282*	0.131282	0.131282	0.000150691	0.131131
o-Xylene		0.0243479*	0.0243479	0.0243479	2.50490E-05	0.0243228
Pentane, 2,2,4-Trimethyl-		0.0500143*	0.0500143	0.0500143	0.000339087	0.0496752

Mass Fraction	%	%	%	%	%
Methane	1.55184*	1.55184	1.55184	30.9899	0.0384650
Ethane	0.960249*	0.960249	0.960249	16.6498	0.153669
Propane	1.63089*	1.63089	1.63089	19.1670	0.729384
i-Butane	1.16362*	1.16362	1.16362	7.69505	0.827845
n-Butane	1.88693*	1.88693	1.88693	9.39741	1.50083
Propane, 2,2-Dimethyl-	0.0243399*	0.0243399	0.0243399	0.0927841	0.0208212
i-Pentane	2.14620*	2.14620	2.14620	4.42680	2.02895
n-Pentane	2.15270*	2.15270	2.15270	3.27528	2.09499
Butane, 2,2-Dimethyl-	0.172609*	0.172609	0.172609	0.161614	0.173175
Butane, 2,3-Dimethyl-	0.643367*	0.643367	0.643367	0.433045	0.654180
Pentane, 2-Methyl-	1.75363*	1.75363	1.75363	1.04299	1.79017
Pentane, 3-Methyl-	1.06009*	1.06009	1.06009	0.561296	1.08574
n-Hexane	1.77866*	1.77866	1.77866	0.735714	1.83228
n-Heptane	17.0270*	17.0270	17.0270	2.10063	17.7944
n-Octane	10.6225*	10.6225	10.6225	0.361705	11.1499
n-Nonane	15.5467*	15.5467	15.5467	0.153130	16.3380
n-Decane	26.7431*	26.7431	26.7431	0.0764469	28.1140
Nitrogen	0.00321856*	0.00321856	0.00321856	0.0654078	2.14981E-05
CO2	0.0717845*	0.0717845	0.0717845	1.36228	0.00544164
Benzene	0.995195*	0.995195	0.995195	0.392986	1.02615
Toluene	4.55616*	4.55616	4.55616	0.474932	4.76597
Ethylbenzene	0.525101*	0.525101	0.525101	0.0151056	0.551319
m-Xylene	4.37777*	4.37777	4.37777	0.102771	4.59754
o-Xylene	0.811913*	0.811913	0.811913	0.0170834	0.852774
Pentane, 2,2,4-Trimethyl-	1.79447*	1.79447	1.79447	0.248822	1.87393
Mass Flow	**lb/h**	**lb/h**	**lb/h**	**lb/h**	**lb/h**
Methane	4.94059*	4.94059	4.94059	4.82412	0.116473
Ethane	3.05715*	3.05715	3.05715	2.59183	0.465315
Propane	5.19227*	5.19227	5.19227	2.98367	2.20860
i-Butane	3.70461*	3.70461	3.70461	1.19787	2.50674
n-Butane	6.00743*	6.00743	6.00743	1.46287	4.54456
Propane, 2,2-Dimethyl-	0.0774909*	0.0774909	0.0774909	0.0144435	0.0630474
i-Pentane	6.83285*	6.83285	6.83285	0.689108	6.14374
n-Pentane	6.85357*	6.85357	6.85357	0.509854	6.34372
Butane, 2,2-Dimethyl-	0.549537*	0.549537	0.549537	0.0251580	0.524379
Butane, 2,3-Dimethyl-	2.04829*	2.04829	2.04829	0.0674109	1.98088
Pentane, 2-Methyl-	5.58305*	5.58305	5.58305	0.162360	5.42069
Pentane, 3-Methyl-	3.37502*	3.37502	3.37502	0.0873754	3.28765
n-Hexane	5.66274*	5.66274	5.66274	0.114527	5.54822
n-Heptane	54.2090*	54.2090	54.2090	0.327000	53.8820
n-Octane	33.8187*	33.8187	33.8187	0.0563057	33.7624
n-Nonane	49.4959*	49.4959	49.4959	0.0238373	49.4721
n-Decane	85.1422*	85.1422	85.1422	0.0119003	85.1303
Nitrogen	0.0102470*	0.0102470	0.0102470	0.0101819	6.50969E-05
CO2	0.228541*	0.228541	0.228541	0.212063	0.0164775
Benzene	3.16841*	3.16841	3.16841	0.0611750	3.10723
Toluene	14.5055*	14.5055	14.5055	0.0739314	14.4315
Ethylbenzene	1.67176*	1.67176	1.67176	0.00235145	1.66941
m-Xylene	13.9375*	13.9375	13.9375	0.0159981	13.9215
o-Xylene	2.58489*	2.58489	2.58489	0.00265933	2.58223
Pentane, 2,2,4-Trimethyl-	5.71306*	5.71306	5.71306	0.0387334	5.67432

Process Streams		1	2	3	4	5
Properties	**Status:**	**Solved**	**Solved**	**Solved**	**Solved**	**Solved**
Phase: Total	**From Block:**	**--**	**VLVE-100**	**XCHG-100**	**VSSL-100**	**VSSL-100**
	To Block:	**VLVE-100**	**XCHG-100**	**VSSL-100**	**--**	**--**
Property	**Units**					
Temperature	°F	66.67*	52.7562	45*	45	45
Pressure	psia	239*	12*	12	12	12
Mole Fraction Vapor	%	2.47395	16.6161	16.0232	100	0
Mole Fraction Light Liquid	%	97.5261	83.3839	83.9768	0	100
Mole Fraction Heavy Liquid	%	0	0	0	0	0
Molecular Weight	lb/lbmol	95.5667	95.5667	95.5667	29.1623	108.237
Mass Density	lb/ft^3	35.1545	1.23139	1.29458	0.0650625	45.4133
Molar Flow	lbmol/h	3.33139	3.33139	3.33139	0.533797	2.79760
Mass Flow	lb/h	318.370	318.370	318.370	15.5667	302.804
Vapor Volumetric Flow	ft^3/h	9.05631	258.546	245.926	239.258	6.66772
Liquid Volumetric Flow	gpm	1.12910	32.2342	30.6609	29.8296	0.831301
Std Vapor Volumetric Flow	MMSCFD	0.0303411	0.0303411	0.0303411	0.00486163	0.0254795
Std Liquid Volumetric Flow	sgpm	0.921022	0.921022	0.921022	0.0751890	0.845833*
Compressibility		0.115025	0.169355	0.163564	0.993116	0.00528083
Specific Gravity					1.00689	0.728139
API Gravity						64.7227
Enthalpy	Btu/h	-277049	-277049	-278400	-21199.2	-257201
Mass Enthalpy	Btu/lb	-870.211	-870.211	-874.454	-1361.83	-849.398
Mass Cp	Btu/(lb*°F)	0.490087	0.472134	0.468229	0.424949	0.470454
Ideal Gas CpCv Ratio		1.05850	1.05984	1.06060	1.19188	1.05361
Dynamic Viscosity	cP				0.00919046	0.615177
Kinematic Viscosity	cSt				8.81831	0.845660
Thermal Conductivity	Btu/(h*ft*°F)				0.0136347	0.0753305
Surface Tension	lbf/ft					0.00159619
Net Ideal Gas Heating Value	Btu/ft^3	4816.41	4816.41	4816.41	1542.41	5441.10
Net Liquid Heating Value	Btu/lb	18968.1	18968.1	18968.1	19964.1	18916.9
Gross Ideal Gas Heating Value	Btu/ft^3	5182.77	5182.77	5182.77	1687.53	5849.69
Gross Liquid Heating Value	Btu/lb	20422.9	20422.9	20422.9	21852.5	20349.4

Process Streams		1	2	3	4	5
Composition	**Status:**	**Solved**	**Solved**	**Solved**	**Solved**	**Solved**
Phase: Vapor	**From Block:**	**--**	**VLVE-100**	**XCHG-100**	**VSSL-100**	**VSSL-100**
	To Block:	**VLVE-100**	**XCHG-100**	**VSSL-100**	**--**	**--**
Mole Fraction		**%**	**%**	**%**	**%**	
Methane		89.2610	54.4207	56.3340	56.3340	
Ethane		6.15061	15.8481	16.1477	16.1477	
Propane		2.11509	13.0156	12.6759	12.6759	
i-Butane		0.463446	4.18333	3.86092	3.86092	
n-Butane		0.529309	5.22200	4.71506	4.71506	
Propane, 2,2-Dimethyl-		0.00409994	0.0421505	0.0375030	0.0375030	
i-Pentane		0.194433	2.08045	1.78930	1.78930	
n-Pentane		0.144556	1.56166	1.32385	1.32385	
Butane, 2,2-Dimethyl-		0.00606461	0.0654375	0.0546911	0.0546911	
Butane, 2,3-Dimethyl-		0.0166838	0.177432	0.146545	0.146545	
Pentane, 2-Methyl-		0.0410032	0.430161	0.352956	0.352956	
Pentane, 3-Methyl-		0.0222021	0.232237	0.189946	0.189946	
n-Hexane		0.0300442	0.307190	0.248970	0.248970	
n-Heptane		0.0852452	0.779250	0.611357	0.611357	
n-Octane		0.0150506	0.121581	0.0923424	0.0923424	
n-Nonane		0.00658469	0.0472756	0.0348182	0.0348182	
n-Decane		0.00352277	0.0219040	0.0156687	0.0156687	
Nitrogen		0.226820	0.0656828	0.0680902	0.0680902	
CO2		0.632406	0.876995	0.902698	0.902698	
Benzene		0.0170393	0.180361	0.146717	0.146717	
Toluene		0.0201169	0.191298	0.150318	0.150318	
Ethylbenzene		0.000652557	0.00545093	0.00414933	0.00414933	
m-Xylene		0.00456842	0.0373363	0.0282300	0.0282300	
o-Xylene		0.000761667	0.00621303	0.00469261	0.00469261	
Pentane, 2,2,4-Trimethyl-		0.00864879	0.0801930	0.0635236	0.0635236	

Molar Flow	lbmol/h	lbmol/h	lbmol/h	lbmol/h
Methane	0.0735662	0.301244	0.300710	0.300710
Ethane	0.00506914	0.0877268	0.0861961	0.0861961
Propane	0.00174319	0.0720475	0.0676637	0.0676637
i-Butane	0.000381957	0.0231567	0.0206095	0.0206095
n-Butane	0.000436240	0.0289062	0.0251689	0.0251689
Propane, 2,2-Dimethyl-	3.37904E-06	0.000233323	0.000200190	0.000200190
i-Pentane	0.000160246	0.0115162	0.00955121	0.00955121
n-Pentane	0.000119139	0.00864450	0.00706670	0.00706670
Butane, 2,2-Dimethyl-	4.99826E-06	0.000362227	0.000291940	0.000291940
Butane, 2,3-Dimethyl-	1.37503E-05	0.000982170	0.000782253	0.000782253
Pentane, 2-Methyl-	3.37935E-05	0.00238114	0.00188407	0.00188407
Pentane, 3-Methyl-	1.82983E-05	0.00128554	0.00101393	0.00101393
n-Hexane	2.47615E-05	0.00170044	0.00132899	0.00132899
n-Heptane	7.02565E-05	0.00431351	0.00326341	0.00326341
n-Octane	1.24042E-05	0.000673009	0.000492921	0.000492921
n-Nonane	5.42690E-06	0.000261692	0.000185859	0.000185859
n-Decane	2.90336E-06	0.000121249	8.36390E-05	8.36390E-05
Nitrogen	0.000186938	0.000363585	0.000363464	0.000363464
CO2	0.000521209	0.00485458	0.00481858	0.00481858
Benzene	1.40432E-05	0.000998384	0.000783172	0.000783172
Toluene	1.65798E-05	0.00105892	0.000802395	0.000802395
Ethylbenzene	5.37818E-07	3.01734E-05	2.21490E-05	2.21490E-05
m-Xylene	3.76515E-06	0.000206674	0.000150691	0.000150691
o-Xylene	6.27742E-07	3.43921E-05	2.50490E-05	2.50490E-05
Pentane, 2,2,4-Trimethyl-	7.12806E-06	0.000443906	0.000339087	0.000339087
Mass Fraction	**%**	**%**	**%**	**%**
Methane	77.2688	28.8310	30.9899	30.9899
Ethane	9.97951	15.7370	16.6498	16.6498
Propane	5.03264	18.9533	19.1670	19.1670
i-Butane	1.45349	8.02952	7.69505	7.69505
n-Butane	1.66006	10.0232	9.39741	9.39741
Propane, 2,2-Dimethyl-	0.0159616	0.100429	0.0927841	0.0927841
i-Pentane	0.756956	4.95691	4.42680	4.42680
n-Pentane	0.562778	3.72083	3.27528	3.27528
Butane, 2,2-Dimethyl-	0.0282006	0.186224	0.161614	0.161614
Butane, 2,3-Dimethyl-	0.0775799	0.504941	0.433045	0.433045
Pentane, 2-Methyl-	0.190665	1.22416	1.04299	1.04299
Pentane, 3-Methyl-	0.103240	0.660907	0.561296	0.561296
n-Hexane	0.139706	0.874209	0.735714	0.735714
n-Heptane	0.460912	2.57857	2.10063	2.10063
n-Octane	0.0927682	0.458634	0.361705	0.361705
n-Nonane	0.0455703	0.200234	0.153130	0.153130
n-Decane	0.0270461	0.102920	0.0764469	0.0764469
Nitrogen	0.342862	0.0607635	0.0654078	0.0654078
CO2	1.50181	1.27458	1.36228	1.36228
Benzene	0.0718190	0.465249	0.392986	0.392986
Toluene	0.100017	0.582070	0.474932	0.474932
Ethylbenzene	0.00373828	0.0191107	0.0151056	0.0151056
m-Xylene	0.0261709	0.130899	0.102771	0.102771
o-Xylene	0.00436333	0.0217826	0.0170834	0.0170834
Pentane, 2,2,4-Trimethyl-	0.0533091	0.302508	0.248822	0.248822

Mass Flow	lb/h	lb/h	lb/h	lb/h
Methane	1.18018	4.83269	4.82412	4.82412
Ethane	0.152424	2.63786	2.59183	2.59183
Propane	0.0768672	3.17698	2.98367	2.98367
i-Butane	0.0222002	1.34592	1.19787	1.19787
n-Butane	0.0253552	1.68009	1.46287	1.46287
Propane, 2,2-Dimethyl-	0.000243794	0.0168340	0.0144435	0.0144435
i-Pentane	0.0115615	0.830883	0.689108	0.689108
n-Pentane	0.00859571	0.623690	0.509854	0.509854
Butane, 2,2-Dimethyl-	0.000430727	0.0312151	0.0251580	0.0251580
Butane, 2,3-Dimethyl-	0.00118493	0.0846389	0.0674109	0.0674109
Pentane, 2-Methyl-	0.00291217	0.205196	0.162360	0.162360
Pentane, 3-Methyl-	0.00157686	0.110782	0.0873754	0.0873754
n-Hexane	0.00213383	0.146536	0.114527	0.114527
n-Heptane	0.00703983	0.432222	0.327000	0.327000
n-Octane	0.00141692	0.0768768	0.0563057	0.0563057
n-Nonane	0.000696027	0.0335634	0.0238373	0.0238373
n-Decane	0.000413094	0.0172515	0.0119003	0.0119003
Nitrogen	0.00523678	0.0101852	0.0101819	0.0101819
CO2	0.0229382	0.213647	0.212063	0.212063
Benzene	0.00109694	0.0779856	0.0611750	0.0611750
Toluene	0.00152763	0.0975673	0.0739314	0.0739314
Ethylbenzene	5.70974E-05	0.00320336	0.00235145	0.00235145
m-Xylene	0.000399727	0.0219415	0.0159981	0.0159981
o-Xylene	6.66443E-05	0.00365123	0.00265933	0.00265933
Pentane, 2,2,4-Trimethyl-	0.000814228	0.0507067	0.0387334	0.0387334

Process Streams		1	2	3	4	5
Properties	**Status:**	**Solved**	**Solved**	**Solved**	**Solved**	**Solved**
Phase: Vapor	**From Block:**	**--**	**VLVE-100**	**XCHG-100**	**VSSL-100**	**VSSL-100**
	To Block:	**VLVE-100**	**XCHG-100**	**VSSL-100**	**--**	**--**
Property	**Units**					
Temperature	°F	66.67	52.7562	45	45	
Pressure	psia	239	12	12	12	
Mole Fraction Vapor	%	100	100	100	100	
Mole Fraction Light Liquid	%	0	0	0	0	
Mole Fraction Heavy Liquid	%	0	0	0	0	
Molecular Weight	lb/lbmol	18.5323	30.2813	29.1623	29.1623	
Mass Density	lb/ft^3	0.824142	0.0665493	0.0650625	0.0650625	
Molar Flow	lbmol/h	0.0824169	0.553547	0.533797	0.533797	
Mass Flow	lb/h	1.52737	16.7621	15.5667	15.5667	
Vapor Volumetric Flow	ft^3/h	1.85329	251.875	239.258	239.258	
Liquid Volumetric Flow	gpm	0.231059	31.4026	29.8296	29.8296	
Std Vapor Volumetric Flow	MMSCFD	0.000750622	0.00504150	0.00486163	0.00486163	
Std Liquid Volumetric Flow	sgpm	0.00938772	0.0792780	0.0751890	0.0751890	
Compressibility		0.951467	0.992926	0.993116	0.993116	
Specific Gravity		0.639869	1.04553	1.00689	1.00689	
API Gravity						
Enthalpy	Btu/h	-2809.83	-22230.2	-21199.2	-21199.2	
Mass Enthalpy	Btu/lb	-1839.65	-1326.21	-1361.83	-1361.83	
Mass Cp	Btu/(lb*°F)	0.524888	0.425256	0.424949	0.424949	
Ideal Gas CpCv Ratio		1.27615	1.18333	1.19188	1.19188	
Dynamic Viscosity	cP	0.0110064	0.00921953	0.00919046	0.00919046	
Kinematic Viscosity	cSt	0.833723	8.64857	8.81831	8.81831	
Thermal Conductivity	Btu/(h*ft*°F)	0.0187289	0.0136761	0.0136347	0.0136347	
Surface Tension	lbf/ft					
Net Ideal Gas Heating Value	Btu/ft^3	1016.09	1598.39	1542.41	1542.41	
Net Liquid Heating Value	Btu/lb	20773.1	19920.3	19964.1	19964.1	
Gross Ideal Gas Heating Value	Btu/ft^3	1123.94	1747.43	1687.53	1687.53	
Gross Liquid Heating Value	Btu/lb	22981.4	21788.1	21852.5	21852.5	

Process Streams		1	2	3	4	5
Composition	**Status:**	**Solved**	**Solved**	**Solved**	**Solved**	**Solved**
Phase: Light Liquid	**From Block:**	**--**	**VLVE-100**	**XCHG-100**	**VSSL-100**	**VSSL-100**
	To Block:	**VLVE-100**	**XCHG-100**	**VSSL-100**	**--**	**--**
Mole Fraction		**%**	**%**	**%**		**%**
Methane		7.21469	0.242128	0.259520		0.259520
Ethane		2.97330	0.501979	0.553149		0.553149
Propane		3.57057	1.64526	1.79034		1.79034
i-Butane		1.95004	1.46090	1.54164		1.54164
n-Butane		3.16784	2.68022	2.79489		2.79489
Propane, 2,2-Dimethyl-		0.0329539	0.0302652	0.0312358		0.0312358
i-Pentane		2.90998	2.99472	3.04382		3.04382
n-Pentane		2.92009	3.10844	3.14289		3.14289
Butane, 2,2-Dimethyl-		0.196122	0.216525	0.217509		0.217509
Butane, 2,3-Dimethyl-		0.731157	0.820300	0.821655		0.821655
Pentane, 2-Methyl-		1.99303	2.24656	2.24846		2.24846
Pentane, 3-Methyl-		1.20488	1.36361	1.36369		1.36369
n-Hexane		2.02178	2.30435	2.30136		2.30136
n-Heptane		16.6491	19.3201	19.2213		19.2213
n-Octane		9.11209	10.6337	10.5651		10.5651
n-Nonane		11.8780	13.8833	13.7880		13.7880
n-Decane		18.4182	21.5377	21.3870		21.3870
Nitrogen		0.00550479	7.92955E-05	8.30633E-05		8.30633E-05
CO2		0.143792	0.0121824	0.0133832		0.0133832
Benzene		1.24804	1.42427	1.42191		1.42191
Toluene		4.84505	5.62926	5.59869		5.59869
Ethylbenzene		0.484655	0.565786	0.562079		0.562079
m-Xylene		4.04059	4.71858	4.68727		4.68727
o-Xylene		0.749381	0.875263	0.869418		0.869418
Pentane, 2,2,4-Trimethyl-		1.53917	1.78449	1.77564		1.77564
Molar Flow		**lbmol/h**	**lbmol/h**	**lbmol/h**		**lbmol/h**
Methane		0.234404	0.00672593	0.00726031		0.00726031
Ethane		0.0966018	0.0139442	0.0154749		0.0154749
Propane		0.116007	0.0457028	0.0500866		0.0500866
i-Butane		0.0633564	0.0405816	0.0431288		0.0431288
n-Butane		0.102922	0.0744524	0.0781898		0.0781898
Propane, 2,2-Dimethyl-		0.00107066	0.000840720	0.000873853		0.000873853
i-Pentane		0.0945448	0.0831888	0.0851538		0.0851538
n-Pentane		0.0948730	0.0863477	0.0879255		0.0879255
Butane, 2,2-Dimethyl-		0.00637197	0.00601474	0.00608502		0.00608502
Butane, 2,3-Dimethyl-		0.0237551	0.0227867	0.0229866		0.0229866
Pentane, 2-Methyl-		0.0647533	0.0624059	0.0629030		0.0629030
Pentane, 3-Methyl-		0.0391463	0.0378791	0.0381507		0.0381507
n-Hexane		0.0656871	0.0640114	0.0643828		0.0643828
n-Heptane		0.540927	0.536684	0.537734		0.537734
n-Octane		0.296050	0.295389	0.295569		0.295569
n-Nonane		0.385912	0.385656	0.385732		0.385732
n-Decane		0.598403	0.598285	0.598322		0.598322
Nitrogen		0.000178849	2.20271E-06	2.32378E-06		2.32378E-06
CO2		0.00467178	0.000338408	0.000374407		0.000374407
Benzene		0.0405484	0.0395641	0.0397793		0.0397793
Toluene		0.157415	0.156372	0.156629		0.156629
Ethylbenzene		0.0157463	0.0157167	0.0157247		0.0157247
m-Xylene		0.131278	0.131075	0.131131		0.131131
o-Xylene		0.0243472	0.0243135	0.0243228		0.0243228
Pentane, 2,2,4-Trimethyl-		0.0500072	0.0495704	0.0496752		0.0496752

Mass Fraction	%	%	%	%
Methane	1.18684	0.0357751	0.0384650	0.0384650
Ethane	0.916771	0.139018	0.153669	0.153669
Propane	1.61449	0.668182	0.729384	0.729384
i-Butane	1.16222	0.782039	0.827845	0.827845
n-Butane	1.88803	1.43475	1.50083	1.50083
Propane, 2,2-Dimethyl-	0.0243802	0.0201112	0.0208212	0.0208212
i-Pentane	2.15289	1.98999	2.02895	2.02895
n-Pentane	2.16037	2.06555	2.09499	2.09499
Butane, 2,2-Dimethyl-	0.173306	0.171853	0.173175	0.173175
Butane, 2,3-Dimethyl-	0.646095	0.651060	0.654180	0.654180
Pentane, 2-Methyl-	1.76117	1.78306	1.79017	1.79017
Pentane, 3-Methyl-	1.06471	1.08228	1.08574	1.08574
n-Hexane	1.78657	1.82893	1.83228	1.83228
n-Heptane	17.1069	17.8300	17.7944	17.7944
n-Octane	10.6732	11.1873	11.1499	11.1499
n-Nonane	15.6214	16.3995	16.3380	16.3380
n-Decane	26.8719	28.2237	28.1140	28.1140
Nitrogen	0.00158128	2.04588E-05	2.14981E-05	2.14981E-05
CO2	0.0648910	0.00493792	0.00544164	0.00544164
Benzene	0.999647	1.02465	1.02615	1.02615
Toluene	4.57764	4.77702	4.76597	4.76597
Ethylbenzene	0.527614	0.553222	0.551319	0.551319
m-Xylene	4.39875	4.61380	4.59754	4.59754
o-Xylene	0.815806	0.855825	0.852774	0.852774
Pentane, 2,2,4-Trimethyl-	1.80286	1.87739	1.87393	1.87393
Mass Flow	**lb/h**	**lb/h**	**lb/h**	**lb/h**
Methane	3.76041	0.107901	0.116473	0.116473
Ethane	2.90472	0.419289	0.465315	0.465315
Propane	5.11540	2.01529	2.20860	2.20860
i-Butane	3.68241	2.35869	2.50674	2.50674
n-Butane	5.98208	4.32734	4.54456	4.54456
Propane, 2,2-Dimethyl-	0.0772471	0.0606569	0.0630474	0.0630474
i-Pentane	6.82129	6.00197	6.14374	6.14374
n-Pentane	6.84497	6.22988	6.34372	6.34372
Butane, 2,2-Dimethyl-	0.549106	0.518322	0.524379	0.524379
Butane, 2,3-Dimethyl-	2.04711	1.96365	1.98088	1.98088
Pentane, 2-Methyl-	5.58013	5.37785	5.42069	5.42069
Pentane, 3-Methyl-	3.37345	3.26424	3.28765	3.28765
n-Hexane	5.66061	5.51621	5.54822	5.54822
n-Heptane	54.2019	53.7767	53.8820	53.8820
n-Octane	33.8173	33.7419	33.7624	33.7624
n-Nonane	49.4952	49.4624	49.4721	49.4721
n-Decane	85.1418	85.1249	85.1303	85.1303
Nitrogen	0.00501018	6.17054E-05	6.50969E-05	6.50969E-05
CO2	0.205602	0.0148932	0.0164775	0.0164775
Benzene	3.16731	3.09042	3.10723	3.10723
Toluene	14.5039	14.4079	14.4315	14.4315
Ethylbenzene	1.67171	1.66856	1.66941	1.66941
m-Xylene	13.9371	13.9156	13.9215	13.9215
o-Xylene	2.58482	2.58124	2.58223	2.58223
Pentane, 2,2,4-Trimethyl-	5.71224	5.66235	5.67432	5.67432

Process Streams		1	2	3	4	5
Properties	**Status:**	**Solved**	**Solved**	**Solved**	**Solved**	**Solved**
Phase: Light Liquid	**From Block:**	**--**	**VLVE-100**	**XCHG-100**	**VSSL-100**	**VSSL-100**
	To Block:	**VLVE-100**	**XCHG-100**	**VSSL-100**	**--**	**--**
Property	**Units**					
Temperature	°F	66.67	52.7562	45		45
Pressure	psia	239	12	12		12
Mole Fraction Vapor	%	0	0	0		0
Mole Fraction Light Liquid	%	100	100	100		100
Mole Fraction Heavy Liquid	%	0	0	0		0
Molecular Weight	lb/lbmol	97.5208	108.576	108.237		108.237
Mass Density	lb/ft^3	43.9875	45.2167	45.4133		45.4133
Molar Flow	lbmol/h	3.24898	2.77785	2.79760		2.79760
Mass Flow	lb/h	316.843	301.608	302.804		302.804
Vapor Volumetric Flow	ft^3/h	7.20302	6.67029	6.66772		6.66772
Liquid Volumetric Flow	gpm	0.898039	0.831620	0.831301		0.831301
Std Vapor Volumetric Flow	MMSCFD	0.0295905	0.0252996	0.0254795		0.0254795
Std Liquid Volumetric Flow	sgpm	0.911635	0.841744	0.845833		0.845833
Compressibility		0.0938071	0.00523989	0.00528083		0.00528083
Specific Gravity		0.705278	0.724986	0.728139		0.728139
API Gravity		68.1874	64.5939	64.7227		64.7227
Enthalpy	Btu/h	-274240	-254819	-257201		-257201
Mass Enthalpy	Btu/lb	-865.538	-844.868	-849.398		-849.398
Mass Cp	Btu/(lb*°F)	0.489920	0.474739	0.470454		0.470454
Ideal Gas CpCv Ratio		1.05735	1.05276	1.05361		1.05361
Dynamic Viscosity	cP	0.430914	0.584908	0.615177		0.615177
Kinematic Viscosity	cSt	0.611562	0.807548	0.845660		0.845660
Thermal Conductivity	Btu/(h*ft*°F)	0.0721492	0.0746798	0.0753305		0.0753305
Surface Tension	lbf/ft	0.00129587?	0.00156771?	0.00159619		0.00159619
Net Ideal Gas Heating Value	Btu/ft^3	4912.81	5457.67	5441.10		5441.10
Net Liquid Heating Value	Btu/lb	18959.4	18915.2	18916.9		18916.9
Gross Ideal Gas Heating Value	Btu/ft^3	5285.73	5867.34	5849.69		5849.69
Gross Liquid Heating Value	Btu/lb	20410.6	20347.1	20349.4		20349.4

User Value Sets Report

Client Name:	Jonah Energy LLC	**Job:**	
Location:	SHB 1-33 CDP-Baseline		
Flowsheet:	Flowsheet1		

Tank Losses

User Value [ShellLength]

Parameter	20*	ft	Upper Bound	
Lower Bound	0*	ft	Enforce Bound	FALSE

User Value [ShellDiam]

Parameter	12*	ft	Upper Bound	
Lower Bound	0*	ft	Enforce Bound	FALSE

User Value [BreatherVP]

Parameter	0.25*	psig	Upper Bound	
Lower Bound			Enforce Bound	FALSE

User Value [BreatherVacP]

Parameter	-0.0300000*	psig	Upper Bound	
Lower Bound			Enforce Bound	FALSE

User Value [DomeRadius]

Parameter		ft	Upper Bound	ft
Lower Bound		ft	Enforce Bound	FALSE

User Value [OpPress]

Parameter	0*	psig	Upper Bound	
Lower Bound			Enforce Bound	FALSE

User Value [AvgPercentLiq]

Parameter	0.5*	%	Upper Bound	
Lower Bound		%	Enforce Bound	FALSE

User Value [MaxPercentLiq]

Parameter	0.975*	%	Upper Bound	
Lower Bound		%	Enforce Bound	FALSE

User Value [AnnNetTP]

Parameter	28.1991*	bbl/day	Upper Bound	
Lower Bound	0*	bbl/day	Enforce Bound	FALSE

User Value [OREff]

Parameter	70*	%	Upper Bound	
Lower Bound		%	Enforce Bound	FALSE

User Value [AtmPressure]

Parameter	11.7595*	psia	Upper Bound	
Lower Bound			Enforce Bound	FALSE

User Value [MaxLiqSurfaceT]

Parameter	67.0676*	°F	Upper Bound	
Lower Bound			Enforce Bound	FALSE

User Value [WorkingLosses]			
Parameter	0.0898918*	ton/yr	Upper Bound
Lower Bound		ton/yr	Enforce Bound: FALSE

User Value [StandingLosses]			
Parameter	0.688398*	ton/yr	Upper Bound
Lower Bound		ton/yr	Enforce Bound: FALSE

User Value [RimSealLosses]			
Parameter	0*	ton/yr	Upper Bound
Lower Bound			Enforce Bound: FALSE

User Value [WithdrawalLoss]			
Parameter	0*	ton/yr	Upper Bound
Lower Bound			Enforce Bound: FALSE

User Value [LoadingLosses]			
Parameter	0*	ton/yr	Upper Bound
Lower Bound			Enforce Bound: FALSE

User Value [DeckFittingLosses]			
Parameter	0*	ton/yr	Upper Bound
Lower Bound			Enforce Bound: FALSE

User Value [DeckSeamLosses]			
Parameter	0*	ton/yr	Upper Bound
Lower Bound			Enforce Bound: FALSE

User Value [FlashingLosses]			
Parameter	51.3953*	ton/yr	Upper Bound
Lower Bound			Enforce Bound: FALSE

User Value [GasMoleWeight]			
Parameter	0.0576622*	kg/mol	Upper Bound
Lower Bound			Enforce Bound: FALSE

Notes:
This User Value Set was programmatically generated. GUID={F64D6CE6-B4EB-49FC-97CA-502E6C4C6D1B}

GRI-GLYCalc VERSION 4.0 - SUMMARY OF INPUT VALUES

Case Name: SHB 1-33 - Baseline Production
File Name: S:\North_Rockies\EH&S\Jonah Field\Air\Permits & Applications\Well Production Facilities\SHB 6-32\Permit Applications\05-2015 app\SHB 6-32 - GLYCalc_10MM.ddf
Date: May 21, 2015

DESCRIPTION:

Description: (1) 10 MM Dehy with 1 Kimray 9015 PV Glycol Pump and 1.2 MMCFD through this 1 dehy unit

Annual Hours of Operation: 8760.0 hours/yr

WET GAS:

Temperature: 67.00 deg. F
Pressure: 227.00 psig
Wet Gas Water Content: Saturated

Component	Conc. (vol %)
Carbon Dioxide	0.6663
Nitrogen	0.2502
Methane	90.1348
Ethane	5.4990
Propane	1.9710
Isobutane	0.4483
n-Butane	0.4514
Isopentane	0.1823
n-Pentane	0.1277
n-Hexane	0.0443
Cyclohexane	0.0263
Other Hexanes	0.0801
Heptanes	0.0428
Methylcyclohexane	0.0323
2,2,4-Trimethylpentane	0.0036
Benzene	0.0134
Toluene	0.0129
Ethylbenzene	0.0002
Xylenes	0.0019
C8+ Heavies	0.0110

DRY GAS:

Flow Rate: 1.2 MMSCF/day
Water Content: 5.0 lbs. H2O/MMSCF

LEAN GLYCOL:

Glycol Type: TEG
Water Content: 1.5 wt% H2O
Flow Rate: 1.5 gpm

PUMP:

```
                Glycol Pump Type: Gas Injection
   Gas Injection Pump Volume Ratio:     0.080 acfm gas/gpm glycol
```

FLASH TANK:

```
                          Flash Control: Combustion device
               Flash Control Efficiency:  98.00 %
                      Temperature:     150.0 deg. F
                         Pressure:      50.0 psig
```

REGENERATOR OVERHEADS CONTROL DEVICE:

```
                   Control Device: Condenser
                      Temperature:     130.0 deg. F
                         Pressure:      12.0 psia

                   Control Device: Combustion Device
           Destruction Efficiency:      98.0 %
                    Excess Oxygen:      15.0 %
          Ambient Air Temperature:      45.0 deg. F
```

GRI-GLYCalc VERSION 4.0 - AGGREGATE CALCULATIONS REPORT

Case Name: SHB 1-33 - Baseline Production
File Name: S:\North_Rockies\EH&S\Jonah Field\Air\Permits & Applications\Well Production Facilities\SHB 6-32\Permit Applications\05-2015 app\SHB 6-32 - GLYCalc_10MM.ddf
Date: May 21, 2015

DESCRIPTION:

Description: (1) 10 MM Dehy with 1 Kimray 9015 PV Glycol Pump and 1.2 MMCFD through this 1 dehy unit

Annual Hours of Operation: 8760.0 hours/yr

EMISSIONS REPORTS:

CONTROLLED REGENERATOR EMISSIONS

Component	lbs/hr	lbs/day	tons/yr
Methane	0.0034	0.083	0.0151
Ethane	0.0018	0.043	0.0078
Propane	0.0024	0.058	0.0105
Isobutane	0.0013	0.032	0.0058
n-Butane	0.0020	0.048	0.0088
Isopentane	0.0011	0.026	0.0047
n-Pentane	0.0011	0.026	0.0047
n-Hexane	0.0009	0.021	0.0038
Cyclohexane	0.0026	0.062	0.0113
Other Hexanes	0.0012	0.028	0.0051
Heptanes	0.0016	0.039	0.0071
Methylcyclohexane	0.0034	0.081	0.0147
2,2,4-Trimethylpentane	0.0001	0.001	0.0002
Benzene	0.0070	0.169	0.0309
Toluene	0.0048	0.114	0.0208
Ethylbenzene	<0.0001	0.001	0.0001
Xylenes	0.0003	0.008	0.0014
C8+ Heavies	<0.0001	<0.001	0.0001
Total Emissions	0.0349	0.838	0.1529
Total Hydrocarbon Emissions	0.0349	0.838	0.1529
Total VOC Emissions	0.0297	0.712	0.1299
Total HAP Emissions	0.0131	0.313	0.0572
Total BTEX Emissions	0.0121	0.292	0.0532

UNCONTROLLED REGENERATOR EMISSIONS

Component	lbs/hr	lbs/day	tons/yr
Methane	0.1725	4.140	0.7556
Ethane	0.0903	2.167	0.3955
Propane	0.1253	3.006	0.5486
Isobutane	0.0725	1.740	0.3176
n-Butane	0.1126	2.703	0.4933
Isopentane	0.0726	1.743	0.3181
n-Pentane	0.0739	1.773	0.3236
n-Hexane	0.0805	1.931	0.3525
Cyclohexane	0.2907	6.977	1.2733

Other Hexanes	0.0941	2.258	0.4120
Heptanes	0.2674	6.417	1.1711
Methylcyclohexane	0.5783	13.879	2.5329
2,2,4-Trimethylpentane	0.0092	0.222	0.0404
Benzene	0.8211	19.706	3.5963
Toluene	1.1631	27.914	5.0943
Ethylbenzene	0.0240	0.576	0.1051
Xylenes	0.2406	5.775	1.0540
C8+ Heavies	0.6132	14.718	2.6860
Total Emissions	4.9019	117.645	21.4702
Total Hydrocarbon Emissions	4.9019	117.645	21.4702
Total VOC Emissions	4.6391	111.338	20.3191
Total HAP Emissions	2.3385	56.123	10.2425
Total BTEX Emissions	2.2488	53.971	9.8496

FLASH GAS EMISSIONS

Component	lbs/hr	lbs/day	tons/yr
Methane	0.1004	2.408	0.4395
Ethane	0.0154	0.369	0.0673
Propane	0.0109	0.263	0.0480
Isobutane	0.0043	0.104	0.0190
n-Butane	0.0053	0.126	0.0230
Isopentane	0.0030	0.073	0.0133
n-Pentane	0.0025	0.060	0.0110
n-Hexane	0.0016	0.038	0.0069
Cyclohexane	0.0014	0.033	0.0060
Other Hexanes	0.0024	0.057	0.0104
Heptanes	0.0026	0.063	0.0114
Methylcyclohexane	0.0022	0.053	0.0096
2,2,4-Trimethylpentane	0.0002	0.004	0.0008
Benzene	0.0006	0.015	0.0028
Toluene	0.0006	0.015	0.0027
Ethylbenzene	<0.0001	<0.001	<0.0001
Xylenes	0.0001	0.001	0.0002
C8+ Heavies	0.0008	0.020	0.0037
Total Emissions	0.1543	3.702	0.6757
Total Hydrocarbon Emissions	0.1543	3.702	0.6757
Total VOC Emissions	0.0385	0.925	0.1688
Total HAP Emissions	0.0031	0.073	0.0134
Total BTEX Emissions	0.0013	0.031	0.0057

FLASH TANK OFF GAS

Component	lbs/hr	lbs/day	tons/yr
Methane	5.0177	120.424	21.9774
Ethane	0.7688	18.451	3.3674
Propane	0.5474	13.138	2.3978
Isobutane	0.2169	5.207	0.9502
n-Butane	0.2630	6.311	1.1518
Isopentane	0.1514	3.634	0.6631
n-Pentane	0.1257	3.017	0.5506
n-Hexane	0.0783	1.878	0.3428
Cyclohexane	0.0685	1.645	0.3001

Other Hexanes	0.1188	2.851	0.5203
Heptanes	0.1306	3.136	0.5722
Methylcyclohexane	0.1097	2.633	0.4805
2,2,4-Trimethylpentane	0.0087	0.209	0.0381
Benzene	0.0323	0.774	0.1413
Toluene	0.0303	0.726	0.1326
Ethylbenzene	0.0004	0.009	0.0016
Xylenes	0.0027	0.064	0.0117
C8+ Heavies	0.0419	1.007	0.1837
Total Emissions	7.7130	185.113	33.7831
Total Hydrocarbon Emissions	7.7130	185.113	33.7831
Total VOC Emissions	1.9266	46.238	8.4384
Total HAP Emissions	0.1525	3.661	0.6681
Total BTEX Emissions	0.0656	1.574	0.2872

EQUIPMENT REPORTS:

CONDENSER AND COMBUSTION DEVICE

Condenser Outlet Temperature:	130.00	deg. F
Condenser Pressure:	12.00	psia
Condenser Duty:	7.88e-003	MM BTU/hr
Hydrocarbon Recovery:	0.25	bbls/day
Produced Water:	0.22	bbls/day
Ambient Temperature:	45.00	deg. F
Excess Oxygen:	15.00	%
Combustion Efficiency:	98.00	%
Supplemental Fuel Requirement:	7.88e-003	MM BTU/hr

Component	Emitted	Destroyed
Methane	2.00%	98.00%
Ethane	1.98%	98.02%
Propane	1.91%	98.09%
Isobutane	1.84%	98.16%
n-Butane	1.78%	98.22%
Isopentane	1.49%	98.51%
n-Pentane	1.45%	98.55%
n-Hexane	1.07%	98.93%
Cyclohexane	0.89%	99.11%
Other Hexanes	1.23%	98.77%
Heptanes	0.60%	99.40%
Methylcyclohexane	0.58%	99.42%
2,2,4-Trimethylpentane	0.58%	99.42%
Benzene	0.86%	99.14%
Toluene	0.41%	99.59%
Ethylbenzene	0.14%	99.86%
Xylenes	0.13%	99.87%
C8+ Heavies	0.00%	100.00%

ABSORBER

NOTE: Because the Calculated Absorber Stages was below the minimum allowed, GRI-GLYCalc has set the number of Absorber Stages to 1.25 and has calculated a revised Dry Gas Dew Point.

Calculated Absorber Stages:	1.25	
Calculated Dry Gas Dew Point:	2.26	lbs. H2O/MMSCF
Temperature:	67.0	deg. F
Pressure:	227.0	psig
Dry Gas Flow Rate:	1.2000	MMSCF/day
Glycol Losses with Dry Gas:	0.0010	lb/hr
Wet Gas Water Content:	Saturated	
Calculated Wet Gas Water Content:	69.27	lbs. H2O/MMSCF
Calculated Lean Glycol Recirc. Ratio:	26.83	gal/lb H2O

Component	Remaining in Dry Gas	Absorbed in Glycol
Water	3.26%	96.74%
Carbon Dioxide	99.32%	0.68%
Nitrogen	99.96%	0.04%
Methane	99.96%	0.04%
Ethane	99.84%	0.16%
Propane	99.65%	0.35%
Isobutane	99.39%	0.61%
n-Butane	99.15%	0.85%
Isopentane	98.94%	1.06%
n-Pentane	98.59%	1.41%
n-Hexane	97.08%	2.92%
Cyclohexane	87.93%	12.07%
Other Hexanes	97.90%	2.10%
Heptanes	93.20%	6.80%
Methylcyclohexane	83.79%	16.21%
2,2,4-Trimethylpentane	96.93%	3.07%
Benzene	38.43%	61.57%
Toluene	24.12%	75.88%
Ethylbenzene	13.26%	86.74%
Xylenes	8.80%	91.20%
C8+ Heavies	73.72%	26.28%

FLASH TANK

Flash Control:	Combustion device	
Flash Control Efficiency:	98.00 %	
Flash Temperature:	150.0	deg. F
Flash Pressure:	50.0	psig

Component	Left in Glycol	Removed in Flash Gas
Water	99.89%	0.11%
Carbon Dioxide	25.49%	74.51%
Nitrogen	3.28%	96.72%
Methane	3.32%	96.68%
Ethane	10.51%	89.49%
Propane	18.62%	81.38%
Isobutane	25.05%	74.95%
n-Butane	29.99%	70.01%
Isopentane	32.70%	67.30%
n-Pentane	37.29%	62.71%
n-Hexane	50.93%	49.07%

Cyclohexane	81.52%	18.48%
Other Hexanes	44.70%	55.30%
Heptanes	67.33%	32.67%
Methylcyclohexane	84.68%	15.32%
2,2,4-Trimethylpentane	52.16%	47.84%
Benzene	96.41%	3.59%
Toluene	97.66%	2.34%
Ethylbenzene	98.63%	1.37%
Xylenes	99.04%	0.96%
C8+ Heavies	94.36%	5.64%

REGENERATOR

No Stripping Gas used in regenerator.

Component	Remaining in Glycol	Distilled Overhead
Water	79.08%	20.92%
Carbon Dioxide	0.00%	100.00%
Nitrogen	0.00%	100.00%
Methane	0.00%	100.00%
Ethane	0.00%	100.00%
Propane	0.00%	100.00%
Isobutane	0.00%	100.00%
n-Butane	0.00%	100.00%
Isopentane	1.25%	98.75%
n-Pentane	1.15%	98.85%
n-Hexane	0.91%	99.09%
Cyclohexane	3.85%	96.15%
Other Hexanes	2.01%	97.99%
Heptanes	0.72%	99.28%
Methylcyclohexane	4.66%	95.34%
2,2,4-Trimethylpentane	2.67%	97.33%
Benzene	5.17%	94.83%
Toluene	8.07%	91.93%
Ethylbenzene	10.52%	89.48%
Xylenes	13.00%	87.00%
C8+ Heavies	12.63%	87.37%

STREAM REPORTS:

WET GAS STREAM

Temperature: 67.00 deg. F
Pressure: 241.70 psia
Flow Rate: 5.01e+004 scfh

Component	Conc. (vol%)	Loading (lb/hr)
Water	1.46e-001	3.47e+000
Carbon Dioxide	6.65e-001	3.87e+001
Nitrogen	2.50e-001	9.24e+000
Methane	9.00e+001	1.91e+003

Ethane	5.49e+000	2.18e+002
Propane	1.97e+000	1.15e+002
Isobutane	4.48e-001	3.44e+001
n-Butane	4.51e-001	3.46e+001
Isopentane	1.82e-001	1.73e+001
n-Pentane	1.28e-001	1.22e+001
n-Hexane	4.42e-002	5.04e+000
Cyclohexane	2.63e-002	2.92e+000
Other Hexanes	8.00e-002	9.11e+000
Heptanes	4.27e-002	5.66e+000
Methylcyclohexane	3.23e-002	4.18e+000
2,2,4-Trimethylpentane	3.59e-003	5.42e-001
Benzene	1.34e-002	1.38e+000
Toluene	1.29e-002	1.57e+000
Ethylbenzene	2.00e-004	2.80e-002
Xylenes	1.90e-003	2.66e-001
C8+ Heavies	1.10e-002	2.47e+000
Total Components	100.00	2.42e+003

DRY GAS STREAM

Temperature: 67.00 deg. F
Pressure: 241.70 psia
Flow Rate: 5.00e+004 scfh

Component	Conc. (vol%)	Loading (lb/hr)
Water	4.77e-003	1.13e-001
Carbon Dioxide	6.62e-001	3.84e+001
Nitrogen	2.50e-001	9.24e+000
Methane	9.02e+001	1.91e+003
Ethane	5.50e+000	2.18e+002
Propane	1.97e+000	1.14e+002
Isobutane	4.46e-001	3.42e+001
n-Butane	4.48e-001	3.43e+001
Isopentane	1.81e-001	1.72e+001
n-Pentane	1.26e-001	1.20e+001
n-Hexane	4.30e-002	4.89e+000
Cyclohexane	2.31e-002	2.57e+000
Other Hexanes	7.85e-002	8.91e+000
Heptanes	3.99e-002	5.27e+000
Methylcyclohexane	2.71e-002	3.51e+000
2,2,4-Trimethylpentane	3.49e-003	5.26e-001
Benzene	5.15e-003	5.31e-001
Toluene	3.11e-003	3.78e-001
Ethylbenzene	2.65e-005	3.71e-003
Xylenes	1.67e-004	2.34e-002
C8+ Heavies	8.12e-003	1.82e+000
Total Components	100.00	2.41e+003

LEAN GLYCOL STREAM

Temperature: 67.00 deg. F
Flow Rate: 1.50e+000 gpm

Component	Conc. (wt%)	Loading (lb/hr)
TEG	9.85e+001	8.31e+002
Water	1.50e+000	1.27e+001
Carbon Dioxide	3.12e-012	2.63e-011
Nitrogen	4.10e-014	3.45e-013
Methane	2.80e-018	2.36e-017
Ethane	1.93e-008	1.63e-007
Propane	1.94e-009	1.64e-008
Isobutane	7.42e-010	6.26e-009
n-Butane	8.65e-010	7.29e-009
Isopentane	1.09e-004	9.21e-004
n-Pentane	1.02e-004	8.59e-004
n-Hexane	8.75e-005	7.38e-004
Cyclohexane	1.38e-003	1.16e-002
Other Hexanes	2.29e-004	1.93e-003
Heptanes	2.29e-004	1.93e-003
Methylcyclohexane	3.35e-003	2.83e-002
2,2,4-Trimethylpentane	3.01e-005	2.54e-004
Benzene	5.30e-003	4.47e-002
Toluene	1.21e-002	1.02e-001
Ethylbenzene	3.34e-004	2.82e-003
Xylenes	4.26e-003	3.59e-002
C8+ Heavies	1.05e-002	8.86e-002
Total Components	100.00	8.44e+002

RICH GLYCOL AND PUMP GAS STREAM

Temperature: 67.00 deg. F
Pressure: 241.70 psia
Flow Rate: 1.53e+000 gpm
NOTE: Stream has more than one phase.

Component	Conc. (wt%)	Loading (lb/hr)
TEG	9.66e+001	8.31e+002
Water	1.86e+000	1.60e+001
Carbon Dioxide	4.12e-002	3.54e-001
Nitrogen	2.93e-003	2.52e-002
Methane	6.04e-001	5.19e+000
Ethane	9.99e-002	8.59e-001
Propane	7.82e-002	6.73e-001
Isobutane	3.37e-002	2.89e-001
n-Butane	4.37e-002	3.76e-001
Isopentane	2.62e-002	2.25e-001
n-Pentane	2.33e-002	2.00e-001
n-Hexane	1.85e-002	1.59e-001
Cyclohexane	4.31e-002	3.71e-001
Other Hexanes	2.50e-002	2.15e-001
Heptanes	4.65e-002	4.00e-001
Methylcyclohexane	8.33e-002	7.16e-001
2,2,4-Trimethylpentane	2.11e-003	1.82e-002
Benzene	1.04e-001	8.98e-001
Toluene	1.51e-001	1.30e+000
Ethylbenzene	3.16e-003	2.72e-002
Xylenes	3.25e-002	2.79e-001
C8+ Heavies	8.65e-002	7.44e-001

Total Components	100.00	8.60e+002

FLASH TANK OFF GAS STREAM

Temperature: 150.00 deg. F
Pressure: 64.70 psia
Flow Rate: 1.43e+002 scfh

Component	Conc. (vol%)	Loading (lb/hr)
Water	2.65e-001	1.80e-002
Carbon Dioxide	1.59e+000	2.64e-001
Nitrogen	2.31e-001	2.44e-002
Methane	8.29e+001	5.02e+000
Ethane	6.77e+000	7.69e-001
Propane	3.29e+000	5.47e-001
Isobutane	9.89e-001	2.17e-001
n-Butane	1.20e+000	2.63e-001
Isopentane	5.56e-001	1.51e-001
n-Pentane	4.62e-001	1.26e-001
n-Hexane	2.41e-001	7.83e-002
Cyclohexane	2.16e-001	6.85e-002
Other Hexanes	3.65e-001	1.19e-001
Heptanes	3.45e-001	1.31e-001
Methylcyclohexane	2.96e-001	1.10e-001
2,2,4-Trimethylpentane	2.02e-002	8.70e-003
Benzene	1.09e-001	3.23e-002
Toluene	8.70e-002	3.03e-002
Ethylbenzene	9.28e-004	3.72e-004
Xylenes	6.69e-003	2.68e-003
C8+ Heavies	6.52e-002	4.19e-002
Total Components	100.00	8.02e+000

FLASH TANK GLYCOL STREAM

Temperature: 150.00 deg. F
Flow Rate: 1.52e+000 gpm

Component	Conc. (wt%)	Loading (lb/hr)
TEG	9.75e+001	8.31e+002
Water	1.88e+000	1.60e+001
Carbon Dioxide	1.06e-002	9.02e-002
Nitrogen	9.72e-005	8.28e-004
Methane	2.02e-002	1.73e-001
Ethane	1.06e-002	9.03e-002
Propane	1.47e-002	1.25e-001
Isobutane	8.51e-003	7.25e-002
n-Butane	1.32e-002	1.13e-001
Isopentane	8.63e-003	7.35e-002
n-Pentane	8.77e-003	7.47e-002
n-Hexane	9.53e-003	8.12e-002
Cyclohexane	3.55e-002	3.02e-001
Other Hexanes	1.13e-002	9.60e-002
Heptanes	3.16e-002	2.69e-001

Methylcyclohexane	7.12e-002	6.07e-001
2,2,4-Trimethylpentane	1.11e-003	9.48e-003
Benzene	1.02e-001	8.66e-001
Toluene	1.48e-001	1.27e+000
Ethylbenzene	3.15e-003	2.68e-002
Xylenes	3.25e-002	2.77e-001
C8+ Heavies	8.24e-002	7.02e-001
Total Components	100.00	8.52e+002

FLASH GAS EMISSIONS

Flow Rate: 5.11e+002 scfh
Control Method: Combustion Device
Control Efficiency: 98.00

Component	Conc. (vol%)	Loading (lb/hr)
Water	6.28e+001	1.52e+001
Carbon Dioxide	3.66e+001	2.17e+001
Nitrogen	6.46e-002	2.44e-002
Methane	4.64e-001	1.00e-001
Ethane	3.79e-002	1.54e-002
Propane	1.84e-002	1.09e-002
Isobutane	5.54e-003	4.34e-003
n-Butane	6.71e-003	5.26e-003
Isopentane	3.11e-003	3.03e-003
n-Pentane	2.59e-003	2.51e-003
n-Hexane	1.35e-003	1.57e-003
Cyclohexane	1.21e-003	1.37e-003
Other Hexanes	2.05e-003	2.38e-003
Heptanes	1.93e-003	2.61e-003
Methylcyclohexane	1.66e-003	2.19e-003
2,2,4-Trimethylpentane	1.13e-004	1.74e-004
Benzene	6.13e-004	6.45e-004
Toluene	4.87e-004	6.05e-004
Ethylbenzene	5.20e-006	7.44e-006
Xylenes	3.75e-005	5.36e-005
C8+ Heavies	3.65e-004	8.39e-004
Total Components	100.00	3.71e+001

REGENERATOR OVERHEADS STREAM

Temperature: 212.00 deg. F
Pressure: 14.70 psia
Flow Rate: 9.61e+001 scfh

Component	Conc. (vol%)	Loading (lb/hr)
Water	7.34e+001	3.35e+000
Carbon Dioxide	8.10e-001	9.02e-002
Nitrogen	1.17e-002	8.28e-004
Methane	4.25e+000	1.73e-001
Ethane	1.19e+000	9.03e-002
Propane	1.12e+000	1.25e-001
Isobutane	4.93e-001	7.25e-002
n-Butane	7.65e-001	1.13e-001

Isopentane	3.98e-001	7.26e-002
n-Pentane	4.04e-001	7.39e-002
n-Hexane	3.69e-001	8.05e-002
Cyclohexane	1.36e+000	2.91e-001
Other Hexanes	4.31e-001	9.41e-002
Heptanes	1.05e+000	2.67e-001
Methylcyclohexane	2.33e+000	5.78e-001
2,2,4-Trimethylpentane	3.19e-002	9.23e-003
Benzene	4.15e+000	8.21e-001
Toluene	4.99e+000	1.16e+000
Ethylbenzene	8.92e-002	2.40e-002
Xylenes	8.95e-001	2.41e-001
C8+ Heavies	1.42e+000	6.13e-001
Total Components	100.00	8.34e+000

CONDENSER PRODUCED WATER STREAM

Temperature: 130.00 deg. F
Flow Rate: 6.41e-003 gpm

Component	Conc. (wt%)	Loading (lb/hr)	(ppm)
Water	9.99e+001	3.20e+000	999181.
Carbon Dioxide	3.06e-003	9.79e-005	31.
Nitrogen	7.85e-007	2.52e-008	0.
Methane	3.08e-004	9.87e-006	3.
Ethane	1.78e-004	5.71e-006	2.
Propane	2.63e-004	8.44e-006	3.
Isobutane	7.89e-005	2.53e-006	1.
n-Butane	1.56e-004	4.99e-006	2.
Isopentane	5.86e-005	1.88e-006	1.
n-Pentane	6.19e-005	1.98e-006	1.
n-Hexane	4.02e-005	1.29e-006	0.
Cyclohexane	6.59e-004	2.11e-005	7.
Other Hexanes	4.39e-005	1.41e-006	0.
Heptanes	4.13e-005	1.32e-006	0.
Methylcyclohexane	4.07e-004	1.30e-005	4.
2,2,4-Trimethylpentane	9.30e-007	2.98e-008	0.
Benzene	4.83e-002	1.55e-003	483.
Toluene	2.64e-002	8.45e-004	264.
Ethylbenzene	1.40e-004	4.48e-006	1.
Xylenes	1.77e-003	5.68e-005	18.
C8+ Heavies	2.66e-007	8.52e-009	0.
Total Components	100.00	3.20e+000	1000000.

CONDENSER RECOVERED OIL STREAM

Temperature: 130.00 deg. F
Flow Rate: 7.42e-003 gpm

Component	Conc. (wt%)	Loading (lb/hr)
Water	4.59e-002	1.45e-003
Carbon Dioxide	1.40e-002	4.41e-004
Nitrogen	5.65e-005	1.78e-006

Methane	9.39e-003	2.96e-004
Ethane	2.73e-002	8.60e-004
Propane	1.70e-001	5.36e-003
Isobutane	1.86e-001	5.88e-003
n-Butane	3.96e-001	1.25e-002
Isopentane	5.84e-001	1.84e-002
n-Pentane	6.39e-001	2.02e-002
n-Hexane	1.19e+000	3.76e-002
Cyclohexane	5.13e+000	1.62e-001
Other Hexanes	1.15e+000	3.64e-002
Heptanes	5.92e+000	1.87e-001
Methylcyclohexane	1.30e+001	4.10e-001
2,2,4-Trimethylpentane	2.07e-001	6.54e-003
Benzene	1.48e+001	4.67e-001
Toluene	2.93e+001	9.25e-001
Ethylbenzene	7.06e-001	2.23e-002
Xylenes	7.13e+000	2.25e-001
C8+ Heavies	1.94e+001	6.12e-001
Total Components	100.00	3.16e+000

CONDENSER VENT STREAM

Temperature: 130.00 deg. F
Pressure: 12.00 psia
Flow Rate: 1.65e+001 scfh

Component	Conc. (vol%)	Loading (lb/hr)
Water	1.86e+001	1.46e-001
Carbon Dioxide	4.69e+000	8.97e-002
Nitrogen	6.79e-002	8.26e-004
Methane	2.47e+001	1.72e-001
Ethane	6.85e+000	8.94e-002
Propane	6.26e+000	1.20e-001
Isobutane	2.64e+000	6.66e-002
n-Butane	3.97e+000	1.00e-001
Isopentane	1.73e+000	5.42e-002
n-Pentane	1.71e+000	5.37e-002
n-Hexane	1.15e+000	4.29e-002
Cyclohexane	3.52e+000	1.29e-001
Other Hexanes	1.54e+000	5.77e-002
Heptanes	1.85e+000	8.05e-002
Methylcyclohexane	3.94e+000	1.68e-001
2,2,4-Trimethylpentane	5.42e-002	2.69e-003
Benzene	1.04e+001	3.52e-001
Toluene	5.94e+000	2.38e-001
Ethylbenzene	3.67e-002	1.69e-003
Xylenes	3.40e-001	1.57e-002
C8+ Heavies	1.17e-002	8.69e-004
Total Components	100.00	1.98e+000

COMBUSTION DEVICE OFF GAS STREAM

Temperature: 1000.00 deg. F
Pressure: 14.70 psia

Flow Rate: 2.53e-001 scfh

Component	Conc. (vol%)	Loading (lb/hr)
Methane	3.23e+001	3.44e-003
Ethane	8.93e+000	1.79e-003
Propane	8.17e+000	2.40e-003
Isobutane	3.44e+000	1.33e-003
n-Butane	5.18e+000	2.00e-003
Isopentane	2.26e+000	1.08e-003
n-Pentane	2.24e+000	1.07e-003
n-Hexane	1.50e+000	8.58e-004
Cyclohexane	4.60e+000	2.58e-003
Other Hexanes	2.01e+000	1.15e-003
Heptanes	2.41e+000	1.61e-003
Methylcyclohexane	5.14e+000	3.36e-003
2,2,4-Trimethylpentane	7.07e-002	5.38e-005
Benzene	1.36e+001	7.05e-003
Toluene	7.75e+000	4.75e-003
Ethylbenzene	4.79e-002	3.39e-005
Xylenes	4.43e-001	3.13e-004
C8+ Heavies	1.53e-002	1.74e-005
Total Components	100.00	3.49e-002

GRI-GLYCalc VERSION 4.0 - SUMMARY OF INPUT VALUES

Case Name: SHB 1-33 - Baseline Production
File Name: S:\North_Rockies\EH&S\Jonah Field\Air\Permits & Applications\Well Production Facilities\SHB 6-32\Permit Applications\05-2015 app\SHB 6-32 - GLYCalc_4MM.ddf
Date: May 21, 2015

DESCRIPTION:

Description: (1) 4 MM Dehy wirh total of (1) Kimray 4015 PV Glycol Pump and 0.5 MMCFD through this 1 dehy unit

Annual Hours of Operation: 8760.0 hours/yr

WET GAS:

Temperature: 67.00 deg. F
Pressure: 227.00 psig
Wet Gas Water Content: Saturated

Component	Conc. (vol %)
Carbon Dioxide	0.6663
Nitrogen	0.2502
Methane	90.1348
Ethane	5.4990
Propane	1.9710
Isobutane	0.4483
n-Butane	0.4514
Isopentane	0.1823
n-Pentane	0.1277
n-Hexane	0.0443
Cyclohexane	0.0263
Other Hexanes	0.0801
Heptanes	0.0428
Methylcyclohexane	0.0323
2,2,4-Trimethylpentane	0.0036
Benzene	0.0134
Toluene	0.0129
Ethylbenzene	0.0002
Xylenes	0.0019
C8+ Heavies	0.0110

DRY GAS:

Flow Rate: 0.5 MMSCF/day
Water Content: 5.0 lbs. H2O/MMSCF

LEAN GLYCOL:

Glycol Type: TEG
Water Content: 1.5 wt% H2O
Flow Rate: 0.7 gpm

PUMP:

Glycol Pump Type: Gas Injection
Gas Injection Pump Volume Ratio: 0.080 acfm gas/gpm glycol

FLASH TANK:

Flash Control: Combustion device
Flash Control Efficiency: 98.00 %
Temperature: 150.0 deg. F
Pressure: 50.0 psig

REGENERATOR OVERHEADS CONTROL DEVICE:

Control Device: Condenser
Temperature: 130.0 deg. F
Pressure: 12.0 psia

Control Device: Combustion Device
Destruction Efficiency: 98.0 %
Excess Oxygen: 15.0 %
Ambient Air Temperature: 45.0 deg. F

GRI-GLYCalc VERSION 4.0 - AGGREGATE CALCULATIONS REPORT

Case Name: SHB 1-33 - Baseline Production
File Name: S:\North_Rockies\EH&S\Jonah Field\Air\Permits & Applications\Well Production Facilities\SHB 6-32\Permit Applications\05-2015 app\SHB 6-32 - GLYCalc_4MM.ddf
Date: May 21, 2015

DESCRIPTION:

Description: (1) 4 MM Dehy wirh total of (1) Kimray 4015 PV Glycol Pump and 0.5 MMCFD through this 1 dehy unit

Annual Hours of Operation: 8760.0 hours/yr

EMISSIONS REPORTS:

CONTROLLED REGENERATOR EMISSIONS

Component	lbs/hr	lbs/day	tons/yr
Methane	0.0015	0.037	0.0067
Ethane	0.0008	0.019	0.0035
Propane	0.0011	0.026	0.0047
Isobutane	0.0006	0.014	0.0026
n-Butane	0.0009	0.022	0.0039
Isopentane	0.0005	0.012	0.0021
n-Pentane	0.0005	0.012	0.0021
n-Hexane	0.0004	0.009	0.0017
Cyclohexane	0.0012	0.028	0.0051
Other Hexanes	0.0005	0.013	0.0023
Heptanes	0.0007	0.018	0.0032
Methylcyclohexane	0.0015	0.037	0.0067
2,2,4-Trimethylpentane	<0.0001	0.001	0.0001
Benzene	0.0031	0.075	0.0136
Toluene	0.0021	0.050	0.0092
Ethylbenzene	<0.0001	<0.001	0.0001
Xylenes	0.0001	0.003	0.0006
C8+ Heavies	<0.0001	<0.001	<0.0001
Total Emissions	0.0156	0.375	0.0684
Total Hydrocarbon Emissions	0.0156	0.375	0.0684
Total VOC Emissions	0.0133	0.319	0.0581
Total HAP Emissions	0.0058	0.138	0.0252
Total BTEX Emissions	0.0053	0.128	0.0234

UNCONTROLLED REGENERATOR EMISSIONS

Component	lbs/hr	lbs/day	tons/yr
Methane	0.0771	1.850	0.3376
Ethane	0.0404	0.969	0.1768
Propane	0.0559	1.342	0.2450
Isobutane	0.0324	0.777	0.1418
n-Butane	0.0503	1.207	0.2203
Isopentane	0.0324	0.778	0.1420
n-Pentane	0.0330	0.792	0.1445
n-Hexane	0.0359	0.862	0.1573

Cyclohexane	0.1292	3.100	0.5658
Other Hexanes	0.0420	1.008	0.1840
Heptanes	0.1191	2.859	0.5218
Methylcyclohexane	0.2563	6.151	1.1226
2,2,4-Trimethylpentane	0.0041	0.099	0.0180
Benzene	0.3524	8.459	1.5437
Toluene	0.4939	11.853	2.1632
Ethylbenzene	0.0101	0.242	0.0442
Xylenes	0.1010	2.423	0.4423
C8+ Heavies	0.2699	6.478	1.1822
Total Emissions	2.1354	51.251	9.3532
Total Hydrocarbon Emissions	2.1354	51.251	9.3532
Total VOC Emissions	2.0180	48.432	8.8389
Total HAP Emissions	0.9975	23.939	4.3688
Total BTEX Emissions	0.9574	22.978	4.1934

FLASH GAS EMISSIONS

Component	lbs/hr	lbs/day	tons/yr
Methane	0.0448	1.075	0.1962
Ethane	0.0069	0.165	0.0301
Propane	0.0049	0.117	0.0214
Isobutane	0.0019	0.046	0.0085
n-Butane	0.0023	0.056	0.0103
Isopentane	0.0014	0.032	0.0059
n-Pentane	0.0011	0.027	0.0049
n-Hexane	0.0007	0.017	0.0031
Cyclohexane	0.0006	0.015	0.0027
Other Hexanes	0.0011	0.025	0.0046
Heptanes	0.0012	0.028	0.0051
Methylcyclohexane	0.0010	0.023	0.0043
2,2,4-Trimethylpentane	0.0001	0.002	0.0003
Benzene	0.0003	0.007	0.0012
Toluene	0.0003	0.006	0.0011
Ethylbenzene	<0.0001	<0.001	<0.0001
Xylenes	<0.0001	0.001	0.0001
C8+ Heavies	0.0004	0.009	0.0016
Total Emissions	0.0688	1.652	0.3014
Total Hydrocarbon Emissions	0.0688	1.652	0.3014
Total VOC Emissions	0.0172	0.412	0.0751
Total HAP Emissions	0.0013	0.032	0.0058
Total BTEX Emissions	0.0006	0.013	0.0024

FLASH TANK OFF GAS

Component	lbs/hr	lbs/day	tons/yr
Methane	2.2400	53.760	9.8112
Ethane	0.3432	8.238	1.5034
Propane	0.2444	5.865	1.0704
Isobutane	0.0968	2.324	0.4242
n-Butane	0.1174	2.817	0.5141
Isopentane	0.0676	1.622	0.2960
n-Pentane	0.0561	1.346	0.2457
n-Hexane	0.0349	0.838	0.1529

Cyclohexane	0.0304	0.730	0.1332
Other Hexanes	0.0530	1.272	0.2321
Heptanes	0.0581	1.396	0.2547
Methylcyclohexane	0.0485	1.165	0.2126
2,2,4-Trimethylpentane	0.0039	0.093	0.0170
Benzene	0.0138	0.332	0.0606
Toluene	0.0128	0.308	0.0562
Ethylbenzene	0.0002	0.004	0.0007
Xylenes	0.0011	0.027	0.0049
C8+ Heavies	0.0184	0.442	0.0807
Total Emissions	3.4408	82.579	15.0707
Total Hydrocarbon Emissions	3.4408	82.579	15.0707
Total VOC Emissions	0.8576	20.581	3.7561
Total HAP Emissions	0.0667	1.602	0.2923
Total BTEX Emissions	0.0280	0.671	0.1224

EQUIPMENT REPORTS:

CONDENSER AND COMBUSTION DEVICE

Condenser Outlet Temperature:	130.00	deg. F
Condenser Pressure:	12.00	psia
Condenser Duty:	3.53e-003	MM BTU/hr
Hydrocarbon Recovery:	0.11	bbls/day
Produced Water:	0.09	bbls/day
Ambient Temperature:	45.00	deg. F
Excess Oxygen:	15.00	%
Combustion Efficiency:	98.00	%
Supplemental Fuel Requirement:	3.53e-003	MM BTU/hr

Component	Emitted	Destroyed
Methane	2.00%	98.00%
Ethane	1.98%	98.02%
Propane	1.92%	98.08%
Isobutane	1.84%	98.16%
n-Butane	1.79%	98.21%
Isopentane	1.51%	98.49%
n-Pentane	1.47%	98.53%
n-Hexane	1.09%	98.91%
Cyclohexane	0.91%	99.09%
Other Hexanes	1.24%	98.76%
Heptanes	0.62%	99.38%
Methylcyclohexane	0.60%	99.40%
2,2,4-Trimethylpentane	0.60%	99.40%
Benzene	0.88%	99.12%
Toluene	0.42%	99.58%
Ethylbenzene	0.15%	99.85%
Xylenes	0.14%	99.86%
C8+ Heavies	0.00%	100.00%

ABSORBER

NOTE: Because the Calculated Absorber Stages was below the minimum allowed, GRI-GLYCalc has set the number of Absorber Stages to 1.25 and has calculated a revised Dry Gas Dew Point.

Calculated Absorber Stages:	1.25
Calculated Dry Gas Dew Point:	2.25 lbs. H2O/MMSCF
Temperature:	67.0 deg. F
Pressure:	227.0 psig
Dry Gas Flow Rate:	0.5000 MMSCF/day
Glycol Losses with Dry Gas:	0.0004 lb/hr
Wet Gas Water Content:	Saturated
Calculated Wet Gas Water Content:	69.27 lbs. H2O/MMSCF
Calculated Lean Glycol Recirc. Ratio:	28.76 gal/lb H2O

Component	Remaining in Dry Gas	Absorbed in Glycol
Water	3.24%	96.76%
Carbon Dioxide	99.27%	0.73%
Nitrogen	99.96%	0.04%
Methane	99.96%	0.04%
Ethane	99.83%	0.17%
Propane	99.62%	0.38%
Isobutane	99.35%	0.65%
n-Butane	99.09%	0.91%
Isopentane	98.87%	1.13%
n-Pentane	98.49%	1.51%
n-Hexane	96.88%	3.12%
Cyclohexane	87.14%	12.86%
Other Hexanes	97.75%	2.25%
Heptanes	92.73%	7.27%
Methylcyclohexane	82.76%	17.24%
2,2,4-Trimethylpentane	96.71%	3.29%
Benzene	36.59%	63.41%
Toluene	22.69%	77.31%
Ethylbenzene	12.35%	87.65%
Xylenes	8.17%	91.83%
C8+ Heavies	72.25%	27.75%

FLASH TANK

Flash Control:	Combustion device
Flash Control Efficiency:	98.00 %
Flash Temperature:	150.0 deg. F
Flash Pressure:	50.0 psig

Component	Left in Glycol	Removed in Flash Gas
Water	99.89%	0.11%
Carbon Dioxide	25.51%	74.49%
Nitrogen	3.29%	96.71%
Methane	3.33%	96.67%
Ethane	10.52%	89.48%
Propane	18.62%	81.38%
Isobutane	25.06%	74.94%
n-Butane	30.00%	70.00%
Isopentane	32.70%	67.30%
n-Pentane	37.30%	62.70%

n-Hexane	50.95%	49.05%
Cyclohexane	81.55%	18.45%
Other Hexanes	44.72%	55.28%
Heptanes	67.36%	32.64%
Methylcyclohexane	84.71%	15.29%
2,2,4-Trimethylpentane	52.18%	47.82%
Benzene	96.41%	3.59%
Toluene	97.67%	2.33%
Ethylbenzene	98.63%	1.37%
Xylenes	99.04%	0.96%
C8+ Heavies	94.37%	5.63%

REGENERATOR

No Stripping Gas used in regenerator.

Component	Remaining in Glycol	Distilled Overhead
Water	80.20%	19.80%
Carbon Dioxide	0.00%	100.00%
Nitrogen	0.00%	100.00%
Methane	0.00%	100.00%
Ethane	0.00%	100.00%
Propane	0.00%	100.00%
Isobutane	0.00%	100.00%
n-Butane	0.00%	100.00%
Isopentane	1.25%	98.75%
n-Pentane	1.15%	98.85%
n-Hexane	0.91%	99.09%
Cyclohexane	3.85%	96.15%
Other Hexanes	2.01%	97.99%
Heptanes	0.72%	99.28%
Methylcyclohexane	4.66%	95.34%
2,2,4-Trimethylpentane	2.67%	97.33%
Benzene	5.17%	94.83%
Toluene	8.06%	91.94%
Ethylbenzene	10.52%	89.48%
Xylenes	12.99%	87.01%
C8+ Heavies	12.63%	87.37%

STREAM REPORTS:

WET GAS STREAM

Temperature: 67.00 deg. F
Pressure: 241.70 psia
Flow Rate: 2.09e+004 scfh

Component	Conc. (vol%)	Loading (lb/hr)
Water	1.46e-001	1.45e+000
Carbon Dioxide	6.65e-001	1.61e+001
Nitrogen	2.50e-001	3.85e+000

Methane	9.00e+001	7.95e+002
Ethane	5.49e+000	9.09e+001
Propane	1.97e+000	4.78e+001
Isobutane	4.48e-001	1.43e+001
n-Butane	4.51e-001	1.44e+001
Isopentane	1.82e-001	7.23e+000
n-Pentane	1.28e-001	5.06e+000
n-Hexane	4.42e-002	2.10e+000
Cyclohexane	2.63e-002	1.22e+000
Other Hexanes	8.00e-002	3.79e+000
Heptanes	4.27e-002	2.36e+000
Methylcyclohexane	3.23e-002	1.74e+000
2,2,4-Trimethylpentane	3.59e-003	2.26e-001
Benzene	1.34e-002	5.75e-001
Toluene	1.29e-002	6.53e-001
Ethylbenzene	2.00e-004	1.17e-002
Xylenes	1.90e-003	1.11e-001
C8+ Heavies	1.10e-002	1.03e+000
Total Components	100.00	1.01e+003

DRY GAS STREAM

Temperature: 67.00 deg. F
Pressure: 241.70 psia
Flow Rate: 2.08e+004 scfh

Component	Conc. (vol%)	Loading (lb/hr)
Water	4.74e-003	4.69e-002
Carbon Dioxide	6.62e-001	1.60e+001
Nitrogen	2.50e-001	3.85e+000
Methane	9.02e+001	7.94e+002
Ethane	5.50e+000	9.07e+001
Propane	1.97e+000	4.76e+001
Isobutane	4.46e-001	1.42e+001
n-Butane	4.48e-001	1.43e+001
Isopentane	1.80e-001	7.15e+000
n-Pentane	1.26e-001	4.99e+000
n-Hexane	4.30e-002	2.03e+000
Cyclohexane	2.29e-002	1.06e+000
Other Hexanes	7.84e-002	3.71e+000
Heptanes	3.97e-002	2.19e+000
Methylcyclohexane	2.68e-002	1.44e+000
2,2,4-Trimethylpentane	3.49e-003	2.19e-001
Benzene	4.91e-003	2.10e-001
Toluene	2.93e-003	1.48e-001
Ethylbenzene	2.47e-005	1.44e-003
Xylenes	1.55e-004	9.06e-003
C8+ Heavies	7.96e-003	7.44e-001
Total Components	100.00	1.00e+003

LEAN GLYCOL STREAM

Temperature: 67.00 deg. F
Flow Rate: 6.69e-001 gpm

Component	Conc. (wt%)	Loading (lb/hr)
TEG	9.85e+001	3.71e+002
Water	1.50e+000	5.65e+000
Carbon Dioxide	3.12e-012	1.17e-011
Nitrogen	4.09e-014	1.54e-013
Methane	2.79e-018	1.05e-017
Ethane	1.93e-008	7.29e-008
Propane	1.94e-009	7.32e-009
Isobutane	7.41e-010	2.79e-009
n-Butane	8.64e-010	3.26e-009
Isopentane	1.09e-004	4.11e-004
n-Pentane	1.02e-004	3.84e-004
n-Hexane	8.74e-005	3.29e-004
Cyclohexane	1.37e-003	5.17e-003
Other Hexanes	2.29e-004	8.63e-004
Heptanes	2.28e-004	8.61e-004
Methylcyclohexane	3.32e-003	1.25e-002
2,2,4-Trimethylpentane	3.00e-005	1.13e-004
Benzene	5.10e-003	1.92e-002
Toluene	1.15e-002	4.33e-002
Ethylbenzene	3.15e-004	1.19e-003
Xylenes	4.00e-003	1.51e-002
C8+ Heavies	1.04e-002	3.90e-002
Total Components	100.00	3.77e+002

RICH GLYCOL AND PUMP GAS STREAM

Temperature: 67.00 deg. F
Pressure: 241.70 psia
Flow Rate: 6.85e-001 gpm
NOTE: Stream has more than one phase.

Component	Conc. (wt%)	Loading (lb/hr)
TEG	9.66e+001	3.71e+002
Water	1.84e+000	7.06e+000
Carbon Dioxide	4.12e-002	1.58e-001
Nitrogen	2.93e-003	1.13e-002
Methane	6.03e-001	2.32e+000
Ethane	9.99e-002	3.84e-001
Propane	7.82e-002	3.00e-001
Isobutane	3.37e-002	1.29e-001
n-Butane	4.37e-002	1.68e-001
Isopentane	2.62e-002	1.00e-001
n-Pentane	2.33e-002	8.95e-002
n-Hexane	1.85e-002	7.12e-002
Cyclohexane	4.29e-002	1.65e-001
Other Hexanes	2.50e-002	9.59e-002
Heptanes	4.64e-002	1.78e-001
Methylcyclohexane	8.27e-002	3.17e-001
2,2,4-Trimethylpentane	2.11e-003	8.11e-003
Benzene	1.00e-001	3.85e-001
Toluene	1.43e-001	5.50e-001
Ethylbenzene	2.98e-003	1.14e-002
Xylenes	3.05e-002	1.17e-001

C8+ Heavies	8.53e-002	3.27e-001
Total Components	100.00	3.84e+002

FLASH TANK OFF GAS STREAM

Temperature: 150.00 deg. F
Pressure: 64.70 psia
Flow Rate: 6.39e+001 scfh

Component	Conc. (vol%)	Loading (lb/hr)
Water	2.61e-001	7.93e-003
Carbon Dioxide	1.59e+000	1.18e-001
Nitrogen	2.31e-001	1.09e-002
Methane	8.29e+001	2.24e+000
Ethane	6.78e+000	3.43e-001
Propane	3.29e+000	2.44e-001
Isobutane	9.89e-001	9.68e-002
n-Butane	1.20e+000	1.17e-001
Isopentane	5.56e-001	6.76e-002
n-Pentane	4.62e-001	5.61e-002
n-Hexane	2.40e-001	3.49e-002
Cyclohexane	2.14e-001	3.04e-002
Other Hexanes	3.65e-001	5.30e-002
Heptanes	3.44e-001	5.81e-002
Methylcyclohexane	2.93e-001	4.85e-002
2,2,4-Trimethylpentane	2.02e-002	3.88e-003
Benzene	1.05e-001	1.38e-002
Toluene	8.27e-002	1.28e-002
Ethylbenzene	8.75e-004	1.56e-004
Xylenes	6.28e-003	1.12e-003
C8+ Heavies	6.42e-002	1.84e-002
Total Components	100.00	3.58e+000

FLASH TANK GLYCOL STREAM

Temperature: 150.00 deg. F
Flow Rate: 6.77e-001 gpm

Component	Conc. (wt%)	Loading (lb/hr)
TEG	9.75e+001	3.71e+002
Water	1.85e+000	7.05e+000
Carbon Dioxide	1.06e-002	4.03e-002
Nitrogen	9.72e-005	3.70e-004
Methane	2.03e-002	7.71e-002
Ethane	1.06e-002	4.04e-002
Propane	1.47e-002	5.59e-002
Isobutane	8.51e-003	3.24e-002
n-Butane	1.32e-002	5.03e-002
Isopentane	8.63e-003	3.28e-002
n-Pentane	8.78e-003	3.34e-002
n-Hexane	9.53e-003	3.63e-002
Cyclohexane	3.53e-002	1.34e-001
Other Hexanes	1.13e-002	4.29e-002
Heptanes	3.15e-002	1.20e-001

Methylcyclohexane	7.07e-002	2.69e-001
2,2,4-Trimethylpentane	1.11e-003	4.23e-003
Benzene	9.77e-002	3.72e-001
Toluene	1.41e-001	5.37e-001
Ethylbenzene	2.97e-003	1.13e-002
Xylenes	3.05e-002	1.16e-001
C8+ Heavies	8.12e-002	3.09e-001
Total Components	100.00	3.80e+002

FLASH GAS EMISSIONS

Flow Rate: 2.28e+002 scfh
Control Method: Combustion Device
Control Efficiency: 98.00

Component	Conc. (vol%)	Loading (lb/hr)
Water	6.28e+001	6.80e+000
Carbon Dioxide	3.66e+001	9.69e+000
Nitrogen	6.46e-002	1.09e-002
Methane	4.64e-001	4.48e-002
Ethane	3.80e-002	6.86e-003
Propane	1.84e-002	4.89e-003
Isobutane	5.54e-003	1.94e-003
n-Butane	6.72e-003	2.35e-003
Isopentane	3.12e-003	1.35e-003
n-Pentane	2.59e-003	1.12e-003
n-Hexane	1.35e-003	6.98e-004
Cyclohexane	1.20e-003	6.08e-004
Other Hexanes	2.05e-003	1.06e-003
Heptanes	1.93e-003	1.16e-003
Methylcyclohexane	1.64e-003	9.71e-004
2,2,4-Trimethylpentane	1.13e-004	7.76e-005
Benzene	5.89e-004	2.77e-004
Toluene	4.63e-004	2.57e-004
Ethylbenzene	4.90e-006	3.13e-006
Xylenes	3.52e-005	2.25e-005
C8+ Heavies	3.60e-004	3.69e-004
Total Components	100.00	1.66e+001

REGENERATOR OVERHEADS STREAM

Temperature: 212.00 deg. F
Pressure: 14.70 psia
Flow Rate: 4.06e+001 scfh

Component	Conc. (vol%)	Loading (lb/hr)
Water	7.25e+001	1.40e+000
Carbon Dioxide	8.56e-001	4.03e-002
Nitrogen	1.23e-002	3.70e-004
Methane	4.49e+000	7.71e-002
Ethane	1.26e+000	4.04e-002
Propane	1.19e+000	5.59e-002
Isobutane	5.21e-001	3.24e-002

n-Butane	8.09e-001	5.03e-002
Isopentane	4.20e-001	3.24e-002
n-Pentane	4.28e-001	3.30e-002
n-Hexane	3.90e-001	3.59e-002
Cyclohexane	1.44e+000	1.29e-001
Other Hexanes	4.56e-001	4.20e-002
Heptanes	1.11e+000	1.19e-001
Methylcyclohexane	2.44e+000	2.56e-001
2,2,4-Trimethylpentane	3.37e-002	4.12e-003
Benzene	4.22e+000	3.52e-001
Toluene	5.01e+000	4.94e-001
Ethylbenzene	8.90e-002	1.01e-002
Xylenes	8.89e-001	1.01e-001
C8+ Heavies	1.48e+000	2.70e-001
Total Components	100.00	3.57e+000

CONDENSER PRODUCED WATER STREAM

Temperature: 130.00 deg. F
Flow Rate: 2.66e-003 gpm

Component	Conc. (wt%)	Loading (lb/hr)	(ppm)
Water	9.99e+001	1.33e+000	999192.
Carbon Dioxide	3.05e-003	4.07e-005	31.
Nitrogen	7.84e-007	1.04e-008	0.
Methane	3.08e-004	4.10e-006	3.
Ethane	1.78e-004	2.37e-006	2.
Propane	2.63e-004	3.51e-006	3.
Isobutane	7.90e-005	1.05e-006	1.
n-Butane	1.56e-004	2.08e-006	2.
Isopentane	5.91e-005	7.86e-007	1.
n-Pentane	6.25e-005	8.32e-007	1.
n-Hexane	4.09e-005	5.44e-007	0.
Cyclohexane	6.70e-004	8.92e-006	7.
Other Hexanes	4.45e-005	5.92e-007	0.
Heptanes	4.24e-005	5.64e-007	0.
Methylcyclohexane	4.15e-004	5.52e-006	4.
2,2,4-Trimethylpentane	9.54e-007	1.27e-008	0.
Benzene	4.76e-002	6.34e-004	476.
Toluene	2.59e-002	3.45e-004	259.
Ethylbenzene	1.37e-004	1.83e-006	1.
Xylenes	1.74e-003	2.31e-005	17.
C8+ Heavies	2.73e-007	3.64e-009	0.
Total Components	100.00	1.33e+000	1000000.

CONDENSER RECOVERED OIL STREAM

Temperature: 130.00 deg. F
Flow Rate: 3.18e-003 gpm

Component	Conc. (wt%)	Loading (lb/hr)
Water	4.54e-002	6.15e-004
Carbon Dioxide	1.39e-002	1.89e-004

Nitrogen	5.52e-005	7.48e-007
Methane	9.46e-003	1.28e-004
Ethane	2.74e-002	3.71e-004
Propane	1.70e-001	2.31e-003
Isobutane	1.87e-001	2.54e-003
n-Butane	3.98e-001	5.39e-003
Isopentane	5.89e-001	7.98e-003
n-Pentane	6.45e-001	8.74e-003
n-Hexane	1.21e+000	1.64e-002
Cyclohexane	5.22e+000	7.07e-002
Other Hexanes	1.17e+000	1.59e-002
Heptanes	6.07e+000	8.22e-002
Methylcyclohexane	1.33e+001	1.80e-001
2,2,4-Trimethylpentane	2.13e-001	2.89e-003
Benzene	1.45e+001	1.97e-001
Toluene	2.87e+001	3.89e-001
Ethylbenzene	6.91e-001	9.36e-003
Xylenes	6.95e+000	9.41e-002
C8+ Heavies	1.99e+001	2.70e-001
Total Components	100.00	1.35e+000

CONDENSER VENT STREAM

Temperature: 130.00 deg. F
Pressure: 12.00 psia
Flow Rate: 7.37e+000 scfh

Component	Conc. (vol%)	Loading (lb/hr)
Water	1.86e+001	6.51e-002
Carbon Dioxide	4.69e+000	4.01e-002
Nitrogen	6.78e-002	3.69e-004
Methane	2.47e+001	7.69e-002
Ethane	6.85e+000	4.00e-002
Propane	6.26e+000	5.36e-002
Isobutane	2.64e+000	2.98e-002
n-Butane	3.98e+000	4.49e-002
Isopentane	1.74e+000	2.44e-002
n-Pentane	1.73e+000	2.43e-002
n-Hexane	1.16e+000	1.95e-002
Cyclohexane	3.58e+000	5.85e-002
Other Hexanes	1.56e+000	2.61e-002
Heptanes	1.90e+000	3.69e-002
Methylcyclohexane	4.02e+000	7.66e-002
2,2,4-Trimethylpentane	5.56e-002	1.23e-003
Benzene	1.02e+001	1.55e-001
Toluene	5.84e+000	1.05e-001
Ethylbenzene	3.61e-002	7.45e-004
Xylenes	3.33e-001	6.87e-003
C8+ Heavies	1.21e-002	4.00e-004
Total Components	100.00	8.86e-001

COMBUSTION DEVICE OFF GAS STREAM

Temperature: 1000.00 deg. F

Pressure: 14.70 psia
Flow Rate: 1.13e-001 scfh

Component	Conc. (vol%)	Loading (lb/hr)
Methane	3.22e+001	1.54e-003
Ethane	8.94e+000	8.00e-004
Propane	8.17e+000	1.07e-003
Isobutane	3.45e+000	5.97e-004
n-Butane	5.19e+000	8.98e-004
Isopentane	2.28e+000	4.89e-004
n-Pentane	2.26e+000	4.85e-004
n-Hexane	1.52e+000	3.90e-004
Cyclohexane	4.67e+000	1.17e-003
Other Hexanes	2.04e+000	5.22e-004
Heptanes	2.47e+000	7.38e-004
Methylcyclohexane	5.24e+000	1.53e-003
2,2,4-Trimethylpentane	7.26e-002	2.47e-005
Benzene	1.34e+001	3.10e-003
Toluene	7.62e+000	2.09e-003
Ethylbenzene	4.72e-002	1.49e-005
Xylenes	4.35e-001	1.37e-004
C8+ Heavies	1.58e-002	8.00e-006
Total Components	100.00	1.56e-002