AIR QUALITY DIVISION
CHAPTER 6, SECTION 3
OPERATING PERMIT

WYOMING DEPARTMENT OF ENVIRONMENTAL QUALITY
AIR QUALITY DIVISION
122 West 25th Street
Cheyenne, Wyoming 82002

PERMIT NO. 3-2-045-2

Issue Date: **February 28, 2014**
Expiration Date: **July 21, 2015**
Effective Date: **February 28, 2014**
Replaces Permit No.: **3-2-045-1**

In accordance with the provisions of W.S. §35-11-203 through W.S. §35-11-212 and Chapter 6, Section 3 of the Wyoming Air Quality Standards and Regulations,

Encore Energy Partners Operating, LLC
Elk Basin Gas Plant
Section 29, T58N, R99W
Park County, Wyoming

is authorized to operate a stationary source of air contaminants consisting of emission units described in this permit. The units described are subject to the terms and conditions specified in this permit. All terms and conditions of the permit are enforceable by the State of Wyoming. All terms and conditions of the permit, except those designated as not federally enforceable, are enforceable by EPA and citizens under the Act. A copy of this permit shall be kept on-site at the above named facility.

Steven A. Dietrich, Administrator
Air Quality Division

2-28-14
Date

Todd Parfitt, Director
Department of Environmental Quality

3/5/14
Date

WAQSR CHAPTER 6, SECTION 3 OPERATING PERMIT

WYOMING DEPARTMENT OF ENVIRONMENTAL QUALITY
AIR QUALITY DIVISION

TABLE OF CONTENTS
(Modified February 28, 2014)

General Information 3

Source Emission Points 4

Total Facility Estimated Emissions 5

Facility-Specific Permit Conditions 6
- Facility-Wide Permit Conditions 6
- Source-Specific Permit Conditions 6
- Testing Requirements *6*
- Monitoring Requirements 7
- Recordkeeping Requirements 8
- Reporting Requirements *8*
- Accidental Release Prevention Requirements 10

WAQSR Chapter 7, Section 3 Compliance Assurance Monitoring (CAM) Requirements 11
WAQSR Chapter 5, Section 2 and 40 CFR Part 60, Subpart OOOO Requirements 12
WAQSR Chapter 5, Section *3* and 40 CFR 63 Subpart HH Requirements 12
WAQSR Chapter 5, Section 3 and 40 CFR 63 Subpart ZZZZ Requirements *12*

Compliance Certification and Schedule *13*
- Compliance Certification *13*
- Compliance Schedule *13*

General Permit Conditions *14*

State Only Permit Conditions *19*

Summary of Source Emission Limits and Requirements *21*

Abbreviations *23*

Definitions *24*

Appendix A: Compliance Assurance Monitoring (CAM) Plan
Appendix B: ***Reserved***
Appendix C: ***Reserved***
Appendix D: ***Reserved***

GENERAL INFORMATION

Company Name: Encore Energy Partners Operating, LLC

Mailing Address: P.O. Box 569 (Amended January 15, 2013)

City: Powell State: WY Zip: 82435

Plant Name: Elk Basin Gas Plant

Plant Location: Section 29, Township 58 North, Range 99 West, Park County (approximately 16 miles north of Powell, Wyoming on HWY 295).

Plant Mailing Address: P.O. Box 569

City: Powell State: Wyoming Zip: 82435

Name of Owner: Encore Energy Partners Operating, LLC Phone: (817) 877-9955

Responsible Official: Britt Pence Phone: (713) 327-2252
(Amended January 15, 2013)

Alternate Responsible Official: *Curt Kyle* Phone: *(307) 754-7300*
(*Amended September 29, 2010*)

Plant Manager/Contact: Curt Kyle Phone: (307) 754-7300

DEQ Air Quality Contact: District 4 Engineer Phone: (307) 332-6755
510 Meadowview Drive
Lander, Wyoming 82520

SIC Code: 1311 & 1321

Description of Process: The Elk Basin Gas Plant currently processes approximately 12 million standard cubic feet per day (MMSCFD) of sour gas, another 12 MMSCFD of sweet gas and produces propane, butane, natural gas and elemental sulfur for sales. The gas from the collection system enters the plant through a 24-inch line. The inlet scrubber removes any liquids from the feed gas. After scrubbing, the feed gas is sent to the inlet compressors where it is compressed to approximately 500 pounds per square inch gauge (psig). After compression H_2S and CO are removed from the gas stream in the amine unit. The gas leaving the amine unit has less than 4 parts per million (ppm) H_2S in it. The acid gas from the amine unit is sent to modified Claus units to reduce the H_2S content and recover elemental sulfur. The sweet gas leaving the amine unit is recompressed and sent to the lean oil absorber and fractionation system, where it is separated into natural gas, propane, butane and gasoline. The facility has three steam generating boilers used primarily to power two electric turbines for power generation at the plant. Flue gas from Boilers #2 and #3 can be re-injected into the Tensleep formation to maintain the pressure and production of the formation. The current injection rates are 10 to 12 MMSCFD at 350-400 psig.

SOURCE EMISSION POINTS

This table may not include any or all insignificant activities at this facility.

(Modified May 16, 2011)

SOURCE ID#	SOURCE DESCRIPTION	SIZE	CH. 6, SEC. 2 PERMITS
EB-1	Boiler #1	62.5 MMBtu/hr	None
EB-2	Boiler #2	62.5 MMBtu/hr	None
EB-3	Boiler #3	44 MMBtu/hr	None
EG-1	Plant Emergency Generator **(Compression Ignition)**	195 HP	March 31, 1993 Division Letter
TEG #1	TEG Dehydrator Still Vent #1	4 MMscfd	None
TEG #2	TEG Dehydrator Still Vent #2	12 MMscfd	None
EC-1	Compressor #1 [1]	1200 hp	None
EC-2	Compressor #2 [1]	1200 hp	None
EC-3	Compressor #3 [1]	1200 hp	None
EC-4	Compressor #4 [1]	1200 hp	None
EC-5	Compressor #5 [1]	1200 hp	None
EC-6	Compressor #6 [1]	1000 hp	None
EC-7	Compressor #7 [1]	1000 hp	None
EC-8	Compressor #8 [1]	1000 hp	None
EC-9	Compressor #9 [1]	2000 hp	None
LO-1	Truck Loading Emissions	10.6 MMgal gasoline/yr	None
F-1	Plant Flare	0.22 MMBtu/hr	None
FUG	Process Fugitive Emissions	N/A	None
INC-1	Tail Gas Incinerator	12.5 MMBtu/hr (12 MM SCFD)	October 10, 1995 Division Letter, June 4 1996, Division Letter

[1] Engines are 2-stroke lean burn.

TOTAL FACILITY ESTIMATED EMISSIONS

For informational purposes only. These emissions are not to be assumed as permit limits.

POLLUTANT	EMISSIONS (TPY)
CRITERIA POLLUTANT EMISSIONS	
Particulate Matter	23.7
PM_{10} Particulate Matter	23.7
Sulfur Dioxide (SO_2)	2170.9
Nitrogen Oxides (NO_X)	1734.8
Carbon Monoxide (CO)	630.9
Volatile Organic Compounds (VOCs)	180.2
HAZARDOUS AIR POLLUTANT (HAP) EMISSIONS	21.5

Emission estimates are from the operating permit application. The emission estimates are based on process information, AP-42 factors, GRI-HAPCalc 3.01 and GLY-Calc 4.0 programs.

FACILITY-SPECIFIC PERMIT CONDITIONS

Facility-Wide Permit Conditions

(F1) PERMIT SHIELD [WAQSR Ch 6, Sec 3(k)]
Compliance with the conditions of this permit shall be deemed compliance with any applicable requirements as of the date of permit issuance.

(F2) SULFUR DIOXIDE EMISSIONS INVENTORY [WAQSR Ch 14, Sec 3]
The permittee shall comply with the requirements of WAQSR Ch 14, Sec 3, including estimating SO_2 emissions in accordance with Ch 14, Sec 3(b), and adjusting estimates in accordance with Ch 14, Sec 3(c), if necessary.

Source-Specific Permit Conditions

(F3) VISIBLE EMISSIONS [WAQSR Ch 3, Sec 2] ***(Modified February 28, 2014)***

(a) Visible emissions from the Plant Emergency Generator (Unit EG-1) shall not exceed 30 percent opacity except for periods not exceeding ten consecutive seconds.

(b) Visible emissions of any contaminant discharged into the atmosphere from the Tail Gas Incinerator, TEG Dehydrator Still Vent #1 and #2 and the Plant Flare (units INC-1, TEG-1, TEG-2 & F-1) shall not exhibit greater than 20 percent opacity except for one period or periods aggregating not more than six minutes in any one hour of not more than 40 percent opacity.

(c) Visible emissions from all other sources at this facility shall not exceed 40 percent opacity (units EC-1 thru EC-9, EB-1, EB-2 & EB-3).

(F4) TAIL GAS INCINERATOR SO_2 EMISSION LIMIT [WAQSR Ch 6, Sec 3(h)(i)(A)]
SO_2 emissions from the Tail Gas Incinerator (unit INC-1) shall not exceed 695 pounds per hour (lb/hr) on a fixed 24-hour average basis.

(F5) SULFUR RECOVERY EFFICIENCY [WAQSR Ch 6, Sec 3(h)(i)(A)]
The Elk Basin Gas Plant shall maintain a minimum sulfur recovery efficiency of 93.5 percent on a fixed 24-hour basis.

(F6) FUEL BURNING EQUIPMENT [WAQSR Ch 3, Sec 3]
Boilers #1, #2 and #3 (units EB-1, EB-2 & EB-3) shall each be limited to NO_X emissions of 0.23 lb/MMBtu of heat input as specified in WAQSR Chapter 3, Section 3(a)(ii).

(F7) TEMPORARY ENGINE REPLACEMENT [WAQSR Ch 6, Sec 3(h)(i)(I)]

(a) Should an engine break down or require an overhaul during the term of this permit, the permittee may bring on site and operate a temporary replacement engine until repairs are made. Permanent replacement of an engine **must** be evaluated by the Division under Ch 6, Sec 2 of WAQSR to determine appropriate permitting action and evaluate the need for additional requirements resulting from the permanent replacement.

(b) The temporary replacement unit shall be identical or similar to the unit replaced with emission levels at or below those of the unit replaced.

(c) The permittee shall notify the Division in writing of such replacement within five working days, provide the date of startup of the replacement engine, and provide a statement regarding the applicability of any New Source Performance Standards (NSPS) in 40 CFR, Part 60 and/or the applicability of any National Emission Standards for Hazardous Air Pollutants (NESHAPs) in 40 CFR, Part 63.

Testing Requirements

(F8) EMISSIONS TESTING [W.S. 35-11-110]

(a) The Division reserves the right to require additional testing as provided under condition G1 of this permit. Should testing be required, test methods found at 40 CFR 60, Appendix A, shall be used as follows:

(i) For visible emissions sources, Method 9 shall be used.
(ii) For SO_2 emissions sources, Methods 1-4 and 6 or 6C shall be used.
(iii) For NO_X emission sources, Methods 1-4 and 7 or 7E shall be used.
(iv) For CO emissions sources, Methods 1-4 and 10 shall be used.
(v) Methods 1-4 and Method 15 shall be used to measure H_2S and COS emissions.
(v) For alternative test methods, or methods used for other pollutants, the approval of the Administrator must be obtained prior to using the test method to measure emissions.

(b) Unless otherwise specified, testing shall be conducted in accordance with WAQSR Ch 5, Sec 2(h).

Monitoring Requirements

(F9) VISIBLE EMISSIONS MONITORING [WAQSR Ch 6, Sec 3(h)(i)(C)(I)]

(a) Periodic monitoring for visible emissions from the Compressor Engines and Boilers #1, #2 and #3 (units EC-1, EC-2, EC-3, EC-4, EC-5, EC-6, EC-7, EC-8, EC-9, EB-1, EB-2 & EB-3) shall consist of monitoring the type of fuel used to ensure natural gas is the sole fuel source for these units.

(b) Periodic monitoring of visible emissions from the Tail Gas Incinerator and the TEG Dehydrator Still Vents #1 and #2 (units INC-1, TEG-1 & TEG-2) is not required since these sources are not expected to have visible emissions during normal operations.

(c) Periodic monitoring of visible emissions from Plant Emergency Generator (unit EG-1) is not required since this source does not operate during normal operations of the facility.

(F10) CONTINUOUS SO_2 EMISSIONS MONITORING
[WAQSR Ch 7, Sec 3 and an October 10, 1995 Division Letter]
Compliance Assurance Monitoring (CAM) for SO_2 emissions shall consist of the following monitoring methods:

(a) The permittee shall operate and maintain a continuous in-stack monitoring system, including a gas flowrate monitoring system on the Tail Gas Incinerator (unit INC-1) stack for continuously measuring SO_2 emissions leaving the combustion zone of the incinerator.

(b) The monitoring system shall comply with the requirements of WAQSR Chapter 5, Section 2(j).

(c) The permittee shall follow any additional requirements of the approved CAM plan, attached as Appendix A, and conditions CAM-1 through CAM-4 of this permit.

(F11) SULFUR RECOVERY EFFICIENCY MONITORING [WAQSR Ch 7, Sec 3]
Compliance Assurance Monitoring (CAM) for sulfur recovery efficiency shall consist of the following monitoring methods:

(a) The permittee shall assess compliance with the sulfur recover efficiency specified in condition F5 of this permit on a continuous basis by the following methods:
(i) The acid gas inlet flowrate shall be monitored on a continuous basis.
(ii) The sulfur entering the system shall be determined weekly at a minimum, by obtaining a sample from the acid gas inlet stream. The gas samples shall be analyzed by gas chromatograph to determine hydrogen sulfide content.
(iii) The sulfur dioxide emissions shall be determined by conducting the continuous emissions monitoring specified under condition F10 of this permit.
(iv) The sulfur recovery efficiency shall be calculated continuously (at least four evenly spaced data points per hour) as described in the approved CAM plan attached as Appendix A of this permit.

(b) The permittee shall follow all additional requirements of the approved CAM plan, attached as Appendix A, and conditions CAM-1 through CAM-4 of this permit.

(F12) NO_X EMISSIONS MONITORING [WAQSR Ch 6, Sec 3(h)(i)(C)(I)]
For NO_X emissions from Boilers #1, #2 and #3 (units EB-1, EB-2 & EB-3), the permittee shall measure NO_X emissions at least once every five years for comparison with the emission limit specified in condition F6.

Recordkeeping Requirements

(F13) SULFUR DIOXIDE EMISSIONS INVENTORY RECORDS [WAQSR Ch 14, Sec 3(b)]

(a) The permittee shall maintain all records used in the calculation of SO_2 emissions for the inventory required by condition F2, including but not limited to the following:
   (i) Amount of fuel consumed;
   (ii) Percent sulfur content of fuel and how the content was determined;
   (iii) Quantity of product produced;
   (iv) Emissions monitoring data;
   (v) Operating data; and
   (vi) How the emissions are calculated, including monitoring/estimation methodology with a demonstration that the selected methodology is acceptable under Ch 14, Sec 3.

(b) The permittee shall maintain records of any physical changes to facility operations or equipment, or any other changes (e.g. raw material or feed) that may affect emissions projections of SO_2.

(c) The permittee shall retain all records and support information for compliance with this condition and with the reporting requirements of condition F16 at the facility, for a period of **at least ten (10) years** from the date of establishment, or if the record was the basis for an adjustment to the milestone, five years after the date of an implementation plan revision, whichever is longer.

(F14) TESTING RECORDS [WAQSR Ch 6, Sec 3(h)(i)(C)(II)]

(a) For any testing required under conditions F8 or F12, other than Method 9 observations, the permittee shall record, as applicable, the following:
   (i) The date, place, and time of sampling or measurements;
   (ii) The date(s) the analyses were performed;
   (iii) The company or entity that performed the analyses;
   (iv) The analytical techniques or methods used;
   (v) The results of such analyses;
   (vi) The operating conditions as they existed at the time of sampling or measurement; and
   (vii) The permittee shall maintain records of any corrective actions taken.

(b) For any Method 9 observations required by the Division under condition F9, the permittee shall keep field records in accordance with Section 2.2 of Method 9.

(c) The permittee shall retain on-site at the facility, the records of each test, measurement, or observation and support information for a period of at least five years from the date of the test, measurement, or observation.

(F15) TAIL GAS INCINERATOR RECORDS
[WAQSR Ch 5, Sec 2(g)(ii) and (g)(v); W.S. 35-11-110; October 10, 1995 Division Letter]

(a) The permittee shall maintain records of the occurrence and duration of any startup, shutdown or malfunction in the operation of the Tail Gas Incinerator (unit INC-1); any malfunction of the air pollution control equipment; or any periods during which either continuous monitoring system is inoperative.

(b) The permittee shall maintain records of all measurements, including the fixed 24-hour measurements from the continuous monitoring system, monitoring device, and performance testing measurements; all continuous monitoring system performance evaluations; all continuous monitoring system or monitoring device calibration checks; adjustments and maintenance performed on these systems or devices; and all other information required under conditions F10 and F11 of this permit, recorded in a permanent form suitable for inspection.

(c) All records shall be retained on-site at the facility for a period of at least five years from the date such records are generated.

Reporting Requirements

(F16) SULFUR DIOXIDE EMISSIONS INVENTORY REPORTS [WAQSR Ch 14, Sec 3(b) and (c)]
(Modified February 28, 2014)

(a) The permittee shall report calendar year SO_2 emissions by April 15th of the following year. The inventory shall be submitted in the format specified by the Division.

(b) Emissions from startup, shutdown, and upset conditions shall be included in the inventory.

(c) If the permittee uses a different emission monitoring or calculation method than was used to report SO_2 emissions in ***2006***, the permittee shall adjust reported SO_2 emissions to be comparable to the emission monitoring or calculation method that was used in ***2006***. The calculations that are used to make this adjustment shall be included with the annual emission report.

(d) The annual reports shall be submitted in accordance with condition G4 of this permit.

(F17) TESTING AND FUEL USE REPORTS [WAQSR Ch 6, Sec 3(h)(i)(C)(III)]

(a) The permittee shall report the results of any emissions tests required under conditions F8 and F12, within 45 days of conducting the tests.

(b) Documentation that all emissions units, except the Plant Emergency Generator (unit EG-1), are firing natural gas as specified by condition F9 of this permit, shall be reported by January 31 and July 31 each year.

(c) All instances of deviations from the conditions of this permit shall be clearly stated in each report.

(d) The reports shall include the information specified under condition F14 of this permit and shall be submitted to the Division in accordance with condition G4.

(F18) QUARTERLY SO_2 AND SULFUR RECOVERY EFFICIENY REPORTS [WAQSR Ch 6, Sec 3(h)(i)(C)(III)]

(a) The permit shall submit a written report of excess emissions, as defined in paragraph (b) of this condition, to the Administrator for every calendar quarter. All quarterly reports shall be postmarked by the 30th day following the end of each calendar quarter and shall include the following information:

(i) The magnitude of excess emissions, any conversion factor(s) used, that date and time of commencement and completion of each time period of excess emissions, and the process operating time and during the reporting period.

(ii) Specific identification of each period of excess emissions that occurs during start-up, shutdowns, and malfunctions of the Tail Gas Incinerator (unit INC-1), the nature and cause of any malfunction, if known, and the corrective action taken or preventative measures adopted.

(iii) The date and time identifying each period during which the continuous monitoring system was inoperative except for zero and span checks and the nature of the system repairs or adjustments.

(iv) When no excess emissions have occurred or the occurred or the continuous monitoring system has not been inoperative, repaired, or adjusted, such information shall be clearly stated in the report.

(b) For the purpose of the reporting under this condition, excess emissions from the Tail Gas Incinerator (unit INC-1) are defined as:

(i) Any 24-hour period during which the average SO_2 emission exceed 695 lb/hr; or

(ii) Any 24-hour period during which the sulfur recovery efficiency is less than 93.5%.

(c) The quarterly reports shall be submitted in accordance with condition G4 of this permit.

(F19) REPORTING EXCESS EMISSIONS & DEVIATIONS FROM PERMIT REQUIREMENTS [WAQSR Ch 6, Sec 3(h)(i)(C)(III)]

(a) General reporting requirements are described under the General Conditions of this permit. The Division reserves the right to require reports as provided under condition G1 of this permit.

(b) Emissions which exceed the limits specified in this permit and which are not reported under a different condition of this permit shall be reported annually with the emission inventory unless specifically superseded by condition G17, condition G19, or other condition(s) of this permit. The probable cause of such exceedance, the duration of the exceedance, the magnitude of the exceedance, and any corrective actions or preventative measures taken shall be included in this annual report. For sources and pollutants which are not continuously monitored, if at any time emissions exceed the limits specified in this permit by 100 percent, or if a single episode of emission limit exceedance spans a period of 24 hours or more, such exceedance shall be reported to the Division within one working day of the exceedance. (Excess emissions due to an emergency shall be reported as specified in condition G17. Excess emissions due to unavoidable equipment malfunction shall be reported as specified in condition G19.)

(c) Any other deviation from the conditions of this permit shall be reported to the Division in writing within 30 days of the deviation or discovery of the deviation.

(F20) GREENHOUSE GAS REPORTS [W.S. 35-11-110]
The permittee shall submit to the Division, a copy of any report(s) required to be submitted to the EPA under 40 CFR Part 98.
(a) The report(s) shall be submitted on or before the date due to EPA as indicated in 40 CFR Part 98, in an electronic format as specified by the Division.
(b) The report(s) shall be submitted in accordance with condition G4(a)(i) of this permit, to the attention of the Division's Emission Inventory Program. A copy need not be sent to the DEQ Air Quality contact.

(F21) GREENHOUSE GAS REPORTS [W.S. 35-11-110] (Modified May 16, 2011)
The permittee shall submit to the Division a summary of any report(s) required to be submitted to the EPA under 40 CFR Part 98.
(a) The report(s) shall be submitted to the Division within 60 days of submission to EPA, in a format as specified by the Division.
(b) The report(s) shall be submitted in accordance with condition G4(a)(i) of this permit, to the attention of the Division's Emission Inventory Program. A copy need not be sent to the DEQ Air Quality contact.

Accidental Release Prevention Requirements

(F22) ACCIDENTAL RELEASE PREVENTION REQUIREMENTS [40 CFR Part 68]
(a) The permittee shall meet all requirements of 40 CFR Part 68 as they apply to the facility.
(b) The permittee shall submit, as part of the annual compliance certification submitted under condition C1 of this permit, a certification statement concerning the facility's compliance with all requirements of 40 CFR Part 68, including the registration and submission of a Risk Management Plan.

WAQSR CHAPTER 7, SECTION 3
COMPLIANCE ASSURANCE MONITORING (CAM) REQUIREMENTS

(CAM-1) COMPLIANCE ASSURANCE MONITORING REQUIREMENTS [WAQSR Ch 7, Sec 3 (b) and (c)]

The permittee shall follow the CAM plan attached as Appendix A of this permit and meet all CAM requirements of WAQSR Chapter 7, Section 3 as they apply to the Tail Gas Incinerator (unit INC-1) and the sulfur recovery (Claus) unit. Compliance with the source specific monitoring, recordkeeping, and reporting requirements of this permit meets the monitoring, recordkeeping, and reporting requirements of WAQSR Chapter 7, Section 3, except for additional requirements specified under conditions CAM-2 through CAM-4.

(CAM-2) OPERATION OF APPROVED MONITORING [WAQSR Ch 7, Sec 3 (g)]

(a) At all times, the permittee shall maintain the monitoring under this section, including but not limited to, maintaining necessary parts for routine repairs of the monitoring equipment.

(b) Except for monitoring malfunctions, associated repairs, and required quality assurance or control activities, the permittee shall conduct all monitoring in continuous operation (or at all required intervals) at all times that the pollutant specific emissions unit is operating.

(c) Upon detecting an excursion, the permittee shall restore operation of the pollutant-specific emission unit to its normal or usual manner of operation as expeditiously as practicable in accordance with good air pollution control practices. The response shall include minimizing the period of any start-up, shutdown or malfunction and taking any corrective actions to restore normal operation and prevent the likely recurrence of the cause of an excursion.

(d) If the permittee identifies a failure to achieve compliance with an emission limit for which the monitoring did not provide an indication of an excursion while providing valid data, or the results of compliance or performance testing documents a need to modify the existing indicator ranges, the permittee shall promptly notify the Division and, if necessary, submit a proposed modification to this permit to address the necessary monitoring changes.

(CAM-3) QUALITY IMPROVEMENT PLAN (QIP) REQUIREMENTS [WAQSR Ch 7, Sec 3 (h)]

(a) If the Division or the EPA Administrator determines, based on available information, that the permittee has used unacceptable procedures in response to an excursion or exceedance, the permittee may be required to develop and implement a Quality Improvement Plan (QIP).

(b) If required, the permittee shall maintain a written Quality Improvement Plan (QIP) and have it available for inspection.

(c) The plan shall include procedures for conducting one or more of the following:

(i) Improved preventative maintenance practices.

(ii) Process operation changes.

(iii) Appropriate improvements to control methods.

(iv) Other steps appropriate to correct control.

(v) More frequent or improved monitoring (in conjunction with (i) - (iv) above).

(d) If a QIP is required, the permittee shall develop and implement a QIP as expeditiously as practicable and shall notify the Division if the period for completing the QIP exceeds 180 days from the date on which the need to implement the QIP was determined.

(e) Following implementation of a QIP, upon any subsequent determination under paragraph (a) above, the Division may require the permittee to make reasonable changes to the QIP if the QIP failed to address the cause of control device problems, or failed to provide adequate procedures for correcting control device problems as expeditiously as practicable.

(f) Implementation of a QIP shall not excuse the permittee from compliance with any existing emission limit(s) or any existing monitoring, testing, reporting, or recordkeeping requirements that may be applicable to the facility.

(CAM-4) SAVINGS PROVISIONS [WAQSR Ch 7, Sec 3 (j)]

Nothing in the CAM regulations shall excuse the permittee from compliance with any existing emission limit or standard, or any existing monitoring, testing, reporting or recordkeeping requirement that may be applicable to the facility.

WAQSR CHAPTER 5, SECTION 2 NEW SOURCE PERFORMANCE STANDARDS (NSPS) and

40 CFR PART 60, SUBPART OOOO REQUIREMENTS FOR CRUDE OIL AND NATURAL GAS PRODUCTION, TRANSMISSION AND DISTRIBUTION
(Modified February 28, 2014)

SUBPART OOOO REQUIREMENTS [40 CFR 60 Subparts A and OOOO; and WAQSR Ch 5, Sec 2]
The permittee shall meet all applicable requirements of 40 CFR 60 Subparts A and OOOO and WAQSR Ch 5, Sec 2 as they apply to affected facilities as specified under §60.5365.

WAQSR CHAPTER 5, SECTION 3
NATIONAL EMISSION STANDARDS FOR HAZARDOUS AIR POLLUTANTS (NESHAPS) and

40 CFR PART 63, SUBPART HH REQUIREMENTS FOR OIL AND NATURAL GAS PRODUCTION FACILITIES
(Modified February 28, 2014)

SUBPART HH REQUIREMENTS [40 CFR Part 63, Subparts ***A and*** HH; and WAQSR Ch 5, Sec 3]
The permittee shall meet all requirements of 40 CFR Part 63, Subparts ***A and*** HH and WAQSR Chapter 5, Section 3, as they apply to affected sources as defined in §63.760, located at oil and natural gas production facilities that are major or area sources of hazardous air pollutants (HAP). For area sources, the affected source includes each triethylene glycol (TEG) dehydration unit ***as specified in §63.760(b)(2)***, including units TEG #1 & TEG #2.

40 CFR PART 63, SUBPART ZZZZ REQUIREMENTS FOR STATIONARY RECIPROCATING INTERNAL COMBUSTION ENGINES
(Modified May 16, 2011)
(Modified February 28, 2014)

***SUBPART ZZZZ* REQUIREMENTS [40 CFR Part 63, Subparts *A and* ZZZZ and WAQSR Ch 5, Sec 3]**
The permittee shall meet all requirements of WAQSR Chapter 5, Section 3 and 40 CFR Part 63, Subparts *A and* ZZZZ, as they apply to each affected source as indicated in §63.6590*(a)*. An affected source is any existing, new, or reconstructed stationary RICE located at a major or area source of HAP emissions, excluding stationary RICE being tested at a stationary RICE test cell/stand. (As required by condition F7(c), if an engine is replaced or reconstructed, subpart applicability will need to be reevaluated and a statement regarding applicability submitted to the Division.) This facility is currently identified as an area source of HAP emissions. Affected sources at this facility include the Compressor Engines #1 - #9 (units EC-1 thru EC-9) and the Plant Emergency Generator (unit EG-1).

The subparts are available at http://www.gpoaccess.gov/cfr/retrieve.html, or from the Division upon request.

COMPLIANCE CERTIFICATION AND SCHEDULE

Compliance Certification

[WAQSR Ch 6, Sec 3(h)(iii)(E)] **(Modified May 16, 2011)** ***(Modified February 28, 2014)***

(C1) (a) The permittee shall submit by January 31 each year a certification addressing compliance with the requirements of this permit. The certification shall be submitted as a stand-alone document separate from any monitoring reports required under this permit.

(b) (i) For visible emissions the permittee shall assess compliance with condition F3 of this permit by verifying natural gas was the sole fuel source used for the compressor engines and the boilers (units EC-1 thru EC-9, EB-1 thru EB-3) except the Plant Emergency Generator (unit EG-1).

(ii) For SO_2 emissions from the Tail Gas Incinerator (unit INC-1), the permittee shall assess compliance with condition F4 of this permit by conducting monitoring required by condition F10.

(iii) For sulfur recover efficiency, the permittee shall assess compliance with condition F5 of this permit by conducting the monitoring required by condition 11.

(iv) For the sulfur dioxide emissions inventory, the permittee shall assess compliance with condition F2 of this permit by reviewing records kept in accordance with condition F13 and verifying reports were submitted in accordance with condition F16.

(v) For NO_X emissions from each of the three boilers EB-1, EB-2, and EB-3, the permittee shall assess compliance with condition F6 by conducting the monitoring required by condition F12.

(vi) ***For any affected facility subject to 40 CFR 60 Subpart OOOO, the permittee shall assess compliance with Subpart OOOO by conducting any applicable testing and monitoring required by §§60.5413 through 60.5417 and by reviewing any applicable records required by §§60.5420, 60.5421, and 60.5423.***

(vii) For HAP emissions from the Glycol Dehydrators (TEG-1 & TEG-2) the permittee shall assess compliance with ***Part 63 Subpart HH*** by ***reviewing any*** records required by ***§§63.760 and 63.774.***

(viii) **For greenhouse gas reporting, the permittee shall assess compliance with condition F21 by verifying that reports were submitted in accordance with condition F21(b).**

(ix) **For Compressor Engines #1 - #9 (units EC-1 thru EC-9) and the Plant Emergency Generator (unit EG-1), the permittee shall assess compliance with the requirements of 40 CFR 63 Subpart ZZZZ by conducting *any applicable* testing and monitoring required by *§§63.6610 through 63.6640* and *by* reviewing the records required by *§§63.6655 and 63.6665.***

(c) The compliance certification shall include:

(i) The permit condition or applicable requirement that is the basis of the certification;

(ii) The current compliance status;

(iii) Whether compliance was continuous or intermittent; and

(iv) The methods used for determining compliance.

(d) For any permit conditions or applicable requirements for which the source is not in compliance, the permittee shall submit with the compliance certification a proposed compliance plan and schedule for Division approval.

(e) The compliance certification shall be submitted to the Division in accordance with condition G4 of this permit and to the Assistant Regional Administrator, Office of Enforcement, Compliance, and Environmental Justice (8ENF-T), U.S. EPA - Region VIII, 1595 Wynkoop Street, Denver, CO 80202-1129.

(f) Determinations of compliance or violations of this permit are not restricted to the monitoring requirements listed in paragraph (b) of this condition; other credible evidence may be used.

Compliance Schedule [WAQSR Ch 6, Sec 3(h)(iii)(C) and (D)]

(C2) The permittee shall continue to comply with the applicable requirements with which the permittee has certified that it is already in compliance.

(C3) The permittee shall comply in a timely manner with applicable requirements that become effective during the term of this permit.

GENERAL PERMIT CONDITIONS

Powers of the Administrator: [W.S. 35-11-110]

(G1) (a) The Administrator may require the owner or operator of any point source to complete plans and specifications for any application for a permit required by the Wyoming Environmental Quality Act or regulations made pursuant thereto and require the submission of such reports regarding actual or potential violations of the Wyoming Environmental Quality Act or regulations thereunder.

(b) The Administrator may require the owner or operator of any point source to establish and maintain records; make reports; install, use and maintain monitoring equipment or methods; sample emissions, or provide such other information as may be reasonably required and specified.

Permit Renewal and Expiration: [WAQSR Ch 6, Sec 3(c)(i)(C), (d)(ii), (d)(iv)(B), and (h)(i)(B)] [W.S. 35-11-206(f)]

(G2) This permit is issued for a fixed term of five years. Permit expiration terminates the permittee's right to operate unless a timely and complete renewal application is submitted at least six months prior to the date of permit expiration. If the permittee submits a timely and complete application for renewal, the permittee's failure to have an operating permit is not a violation of WAQSR Chapter 6, Section 3 until the Division takes final action on the renewal application. This protection shall cease to apply after a completeness determination if the applicant fails to submit by the deadline specified in writing by the Division any additional information identified as being needed to process the application.

Duty to Supplement: [WAQSR Ch 6, Sec 3(c)(iii)]

(G3) The permittee, upon becoming aware that any relevant facts were omitted or incorrect information was submitted in the permit application, shall promptly submit such supplementary facts or corrected information. The permittee shall also provide additional information as necessary to address any requirements that become applicable to the facility after this permit is issued.

Submissions: [WAQSR Ch 6, Sec 3(c)(iv)] [W.S. 35-11-206(c)]

(G4) Any document submitted shall be certified as being true, accurate, and complete by a responsible official.

(a) Submissions to the Division.

(i) Any submissions to the Division including reports, certifications, and emission inventories required under this permit shall be submitted as separate, stand-alone documents and shall be sent to:

Administrator, Air Quality Division
122 West 25th Street
Cheyenne, Wyoming 82002

(ii) Unless otherwise noted elsewhere in this permit, a copy of each submission to the Administrator under paragraph (a)(i) of this condition shall be sent to the DEQ Air Quality Contact listed on page 3 of this permit.

(b) Submissions to EPA.

(i) Each certification required under condition C1 of this permit shall also be sent to:

Assistant Regional Administrator
Office of Enforcement, Compliance, and Environmental Justice (8ENF-T)
U.S. EPA - Region VIII
1595 Wynkoop Street
Denver, CO 80202-1129

(ii) All other required submissions to EPA shall be sent to:

Office of Partnerships and Regulatory Assistance
Air and Radiation Program (8P AR)
U.S. EPA Region VIII
1595 Wynkoop Street
Denver, CO 80202-1129

Changes for Which No Permit Revision Is Required: [WAQSR Ch 6, Sec 3(d)(iii)]

(G5) The permittee may change operations without a permit revision provided that:

(a) The change is not a modification under any provision of title I of the Clean Air Act;

(b) The change has met the requirements of Chapter 6, Section 2 of the WAQSR and is not a modification under Chapter 5, Section 2 or Chapter 6, Section 4 of the WAQSR and the changes do not exceed the emissions allowed under the permit (whether expressed therein as a rate of emissions or in terms of total emissions); and

(c) The permittee provides EPA and the Division with written notification at least 14 days in advance of the proposed change. The permittee, EPA, and the Division shall attach such notice to their copy of the relevant permit. For each such change, the written notification required shall include a brief description of the change within the permitted facility, the date on which the change will occur, any change in emissions, and any permit term or condition that is no longer applicable as a result of the change. The permit shield, if one exists for this permit, shall not apply to any such change made.

Transfer of Ownership or Operation: [WAQSR Ch 6, Sec 3(d)(v)(A)(IV)]

(G6) A change in ownership or operational control of this facility is treated as an administrative permit amendment if no other change in this permit is necessary and provided that a written agreement containing a specific date for transfer of permit responsibility, coverage, and liability between the current and new permittee has been submitted to the Division.

Reopening for Cause: [WAQSR Ch 6, Sec 3(d)(vii)] [W.S. 35-11-206(f)(ii) and (iv)]

(G7) The Division will reopen and revise this permit as necessary to remedy deficiencies in the following circumstances:

(a) Additional applicable requirements under the Clean Air Act or the WAQSR that become applicable to this source if the remaining permit term is three or more years. Such reopening shall be completed not later than 18 months after promulgation of the applicable requirement. No reopening is required if the effective date of the requirement is later than the date on which the permit is due to expire, unless the original permit or any of its terms and conditions have been extended.

(b) Additional requirements (including excess emissions requirements) become applicable to an affected source under the acid rain program. Upon approval by EPA, excess emissions offset plans shall be deemed to be incorporated into the permit.

(c) The Division or EPA determines that the permit contains a material mistake or that inaccurate statements were made in establishing the emissions standards or other terms or conditions of the permit.

(d) The Division or EPA determines that the permit must be revised or revoked to assure compliance with applicable requirements.

Annual Fee Payment: [WAQSR Ch 6, Sec 3(f)(i), (ii), and (vi)] [W.S. 35-11-211]

(G8) The permittee shall, as a condition of continued operations, submit an annual fee to the Division as established in Chapter 6, Section 3 (f) of the WAQSR. The Division shall give written notice of the amount of fee to be assessed and the basis for such fee assessment annually. The assessed fee is due on receipt of the notice unless the fee assessment is appealed pursuant to W.S. 35-11-211(d). If any part of the fee assessment is not appealed it shall be paid to the Division on receipt of the written notice. Any remaining fee which may be due after completion of the appeal is immediately due and payable upon issuance of the Council's decision. Failure to pay fees owed the Division is a violation of Chapter 6, Section 3 (f) and W.S. 35-11-203 and may be cause for the revocation of this permit.

Annual Emissions Inventories: [WAQSR Ch 6, Sec 3(f)(v)(G)]

(G9) The permittee shall submit an annual emission inventory for this facility to the Division for fee assessment and compliance determinations within 60 days following the end of the calendar year. The emissions inventory shall be in a format specified by the Division.

Severability Clause: [WAQSR Ch 6, Sec 3(h)(i)(E)]

(G10) The provisions of this permit are severable, and if any provision of this permit, or the application of any provision of this permit to any circumstance, is held invalid, the application of such provision to other circumstances, and the remainder of this permit, shall not be affected thereby.

Compliance: [WAQSR Ch 6, Sec 3(h)(i)(F)(I) and (II)] [W.S. 35-11-203(b)]

(G11) The permittee must comply with all conditions of this permit. Any permit noncompliance constitutes a violation of the Clean Air Act, Article 2 of the Wyoming Environmental Quality Act, and the WAQSR and is grounds for enforcement action; for permit termination, revocation and reissuance, or modification; or for denial of a permit renewal application. It shall not be a defense for a permittee in an enforcement action that it would have been necessary to halt or reduce the permitted activity in order to maintain compliance with the conditions of this permit.

Permit Actions: [WAQSR Ch 6, Sec 3(h)(i)(F)(III)] [W.S. 35-11-206(f)]

(G12) This permit may be modified, revoked, reopened, and reissued, or terminated for cause. The filing of a request by the permittee for a permit modification, revocation and reissuance, or termination, or of a notification of planned changes or anticipated noncompliance does not stay any permit condition.

Property Rights: [WAQSR Ch 6, Sec 3(h)(i)(F)(IV)]

(G13) This permit does not convey any property rights of any sort, or any exclusive privilege.

Duty to Provide Information: [WAQSR Ch 6, Sec 3(h)(i)(F)(V)]

(G14) The permittee shall furnish to the Division, within a reasonable time, any information that the Division may request in writing to determine whether cause exists for modifying, revoking and reissuing, or terminating the permit or to determine compliance with the permit. Upon request, the permittee shall also furnish to the Division copies of records required to be kept by the permit, including information claimed and shown to be confidential under W.S. 35-11-1101 (a) of the Wyoming Environmental Quality Act. Upon request by the Division, the permittee shall also furnish confidential information directly to EPA along with a claim of confidentiality.

Emissions Trading: [WAQSR Ch 6, Sec 3(h)(i)(H)]

(G15) No permit revision is required, under any approved economic incentives, marketable permits, emissions trading and other similar programs or processes for changes that are provided for in this permit.

Inspection and Entry: [WAQSR Ch 6, Sec 3(h)(iii)(B)] [W.S. 35-11-206(c)]

(G16) Authorized representatives of the Division, upon presentation of credentials and other documents as may be required by law, shall be given permission to:

- (a) enter upon the permittee's premises where a source is located or emissions related activity is conducted, or where records must be kept under the conditions of this permit;
- (b) have access to and copy at reasonable times any records that must be kept under the conditions of this permit;
- (c) inspect at reasonable times any facilities, equipment (including monitoring and air pollution control equipment), practices, or operations regulated or required under this permit;
- (d) sample or monitor any substances or parameters at any location, during operating hours, for the purpose of assuring compliance with this permit or applicable requirements.

Excess Emissions Due to an Emergency: [WAQSR Ch 6, Sec 3(l)]

(G17) The permittee may seek to establish that noncompliance with a technology-based emission limitation under this permit was due to an emergency, as defined in Ch 6, Sec 3(l)(i) of the WAQSR. To do so, the permittee shall demonstrate the affirmative defense of emergency through properly signed, contemporaneous operating logs, or other relevant evidence that:

- (a) an emergency occurred and that the permittee can identify the cause(s) of the emergency;
- (b) the permitted facility was, at the time, being properly operated;
- (c) during the period of the emergency the permittee took all reasonable steps to minimize levels of emissions that exceeded the emissions standards, or other requirements in this permit;

(d) The permittee submitted notice of the emergency to the Division within one working day of the time when emission limitations were exceeded due to the emergency. This notice must contain a description of the emergency, any steps taken to mitigate emissions, and corrective actions taken.

Diluting and Concealing Emissions: [WAQSR Ch 1, Sec 4]

(G18) No person shall cause or permit the installation or use of any device, contrivance, or operational schedule which, without resulting in reduction of the total amount of air contaminant released to the atmosphere, shall dilute or conceal an emission from a source. This condition shall not apply to the control of odors.

Unavoidable Equipment Malfunction: [WAQSR Ch 1, Sec 5]

(G19) (a) Any source believing that any emissions in excess of established regulation limits or standards resulted from an unavoidable equipment malfunction, shall notify the Division within 24 hours of the incident via telephone, electronic mail, fax, or other similar method. A detailed description of the circumstances of the incident as described in paragraph 5(a)(i)(A) Chapter 1, including a corrective program directed at preventing future such incidents, must be submitted within 14 days of the onset of the incident. The Administrator may extend this 14-day time period for cause.

(b) The burden of proof is on the owner or operator of the source to provide sufficient information to demonstrate that an unavoidable equipment malfunction occurred.

Fugitive Dust: [WAQSR Ch 3, Sec 2(f)]

(G20) The permittee shall minimize fugitive dust in compliance with standards in Ch 3, Sec 2(f) of WAQSR for construction/demolition activities, handling and transportation of materials, and agricultural practices.

Carbon Monoxide: [WAQSR Ch 3, Sec 5]

(G21) The emission of carbon monoxide in stack gases from any stationary source shall be limited as may be necessary to prevent ambient standards from being exceeded.

Asbestos: [WAQSR Ch 3, Sec 8]

(G22) The permittee shall comply with emission standards for asbestos during abatement, demolition, renovation, manufacturing, spraying and fabricating activities.

(a) No owner or operator shall build, erect, install, or use any article, machine, equipment, process, or method, the use of which conceals an emission which would otherwise constitute a violation of an applicable standard. Such concealment includes, but is not limited to, the use of gaseous dilutants to achieve compliance with a visible emissions standard, and the piecemeal carrying out of an operation to avoid coverage by a standard that applies only to operations larger than a specified size.

(b) All owners and operators conducting an asbestos abatement project, including an abatement project on a residential building, shall be responsible for complying with Federal requirements and State standards for packaging, transportation, and delivery to an approved waste disposal facility as provided in paragraph (m) of Ch 3, Sec 8.

(c) The permittee shall follow State and Federal standards for any demolition and renovation activities conducted at this facility, including:

(i) A thorough inspection of the affected facility or part of the facility where the demolition or renovation activity will occur shall be conducted to determine the presence of asbestos, including Category I and Category II non-friable asbestos containing material. The results of the inspection will determine which notification and asbestos abatement procedures are applicable to the activity.

(ii) The owner or operator shall follow the appropriate notification requirements of Ch 3, Sec 8(i)(ii).

(iii) The owner or operator shall follow the appropriate procedures for asbestos emissions control, as specified in Chapter 3, Section 8(i)(iii).

(d) No owner or operator of a facility may install or reinstall on a facility component any insulating materials that contain commercial asbestos if the materials are either molded and friable or wet-applied and friable after drying. The provisions of this paragraph do not apply to spray-applied insulating materials regulated under paragraph (j) of Ch 3, Sec 8.

(e) The permittee shall comply with all other requirements of WAQSR Ch 3, Sec 8.

Open Burning Restrictions: [WAQSR Ch 10, Sec 2]

(G23) The permittee conducting an open burn shall comply with all rules and regulations of the Wyoming Department of Environmental Quality, Division of Air Quality, and with the Wyoming Environmental Quality Act.

(a) No person shall burn prohibited materials using an open burning method, except as may be authorized by permit. ***"Prohibited materials"*** means substances including, but not limited to; natural or synthetic rubber products, including tires; waste petroleum products, such as oil or used oil filters; insulated wire; plastic products, including polyvinyl chloride ("PVC") pipe, tubing and connectors; tar, asphalt, asphalt shingles, or tar paper; railroad ties; wood, wood waste, or lumber that is painted or chemically treated; explosives or ammunition; batteries; hazardous waste products; asbestos or asbestos containing materials; or materials which cause dense smoke discharges, excluding refuse and flaring associated with oil and gas well testing, completions and well workovers.

(b) No person or organization shall conduct or cause or permit open burning for the disposal of trade wastes, for a salvage operation, for the destruction of fire hazards if so designated by a jurisdictional fire authority, or for fire fighting training, except when it can be shown by a person or organization that such open burning is absolutely necessary and in the public interest. Any person or organization intending to engage in such open burning shall file a request to do so with the Division.

Sulfur Dioxide Emission Trading and Inventory Program [WAQSR Ch 14]

(G24) Any BART (Best Available Retrofit Technology) eligible facility, or facility which has actual emissions of SO_2 greater than 100 tpy in calendar year 2000 or any subsequent year, shall comply with the applicable requirements of WAQSR Ch 14, Sections 1 through 3, with the exceptions described in sections 2(c) and 3(a).

Stratospheric Ozone Protection Requirements: [40 CFR Part 82]

(G25) The permittee shall comply with all applicable Stratospheric Ozone Protection Requirements, including but not limited to:

(a) *Standards for Appliances* [40 CFR Part 82, Subpart F]
The permittee shall comply with the standards for recycling and emission reduction pursuant to 40 CFR Part 82, Subpart F - Recycling and Emissions Reduction, except as provided for motor vehicle air conditioners (MVACs) in Subpart B:

(i) Persons opening appliances for maintenance, service, repair, or disposal must comply with the required practices pursuant to §82.156.

(ii) Equipment used during the maintenance, service, repair, or disposal of appliances must comply with the standards for recycling and recovery equipment pursuant to §82.158.

(iii) Persons performing maintenance, service, repair, or disposal of appliances must be certified by an approved technician certification program pursuant to §82.161.

(iv) Persons disposing of small appliances, MVACs and MVAC-like appliances must comply with record keeping requirements pursuant to §82.166. ("MVAC-like appliance" as defined at §82.152).

(v) Persons owning commercial or industrial process refrigeration equipment must comply with the leak repair requirements pursuant to §82.166.

(vi) Owners/operators of appliances normally containing 50 or more pounds of refrigerant must keep records of refrigerant purchased and added to such appliances pursuant to §82.166.

(vii) The permittee shall comply with all other requirements of Subpart F.

(b) *Standards for Motor Vehicle Air Conditioners* [40 CFR Part 82, Subpart B]
If the permittee performs a service on motor (fleet) vehicles when this service involves ozone-depleting substance refrigerant in the motor vehicle air conditioner (MVAC), the permittee is subject to all the applicable requirements as specified in 40 CFR part 82, Subpart B, Servicing of Motor Vehicle Air Conditioners. The term "motor vehicle" as used in Subpart B does not include a vehicle in which final assembly of the vehicle has not been completed. The term "MVAC" as used in Subpart B does not include the air-tight sealed refrigeration system used as refrigerated cargo, or the system used on passenger buses using HCFC-22 refrigerant.

STATE ONLY PERMIT CONDITIONS

(MODIFIED May 16, 2011)

(Modified February 28, 2014)

The conditions listed in this section are State only requirements and are not federally enforceable.

Ambient Standards

(S1) The permittee shall operate the emission units described in this permit such that the following ambient standards are not exceeded, ***in accordance with 40 CFR 50***:

POLLUTANT	STANDARD	CONDITION	WAQSR CH. 2, SEC.
PM_{10} particulate matter	50 micrograms per cubic meter	annual arithmetic mean	2 (a)
	150 micrograms per cubic meter	24-hr average concentration with not more than one exceedance per year	
$PM_{2.5}$ particulate matter	15 micrograms per cubic meter	annual arithmetic mean	2 (b)
	35 micrograms per cubic meter	98th percentile 24-hour average concentration	
Nitrogen dioxide	***53 parts per billion***	***annual average concentration***	3
	100 parts per billion	***three-year average of the annual 98th percentile of the daily maximum 1-hr average concentration***	
	0.053 parts per million	annual arithmetic mean	
Sulfur ***dioxide***	***75 parts per billion***	***three-year average of the annual (99th percentile) of the daily max 1-hr average***	4
	0.5 parts per million	***3-hr blocks not to be exceeded more than once per calendar year***	
Carbon monoxide	10 milligrams per cubic meter	max 8-hr concentration with not more than one exceedance per year	5
	40 milligrams per cubic meter	max 1-hr concentration with not more than one exceedance per year	
Ozone	***0.075*** parts per million	***three-year average of the annual fourth-highest*** daily maximum 8-hour average ***concentration***	6
Hydrogen sulfide	70 micrograms per cubic meter	½ hour average not to be exceeded more than two times per year	7
	40 micrograms per cubic meter	½ hour average not to be exceeded more than two times in any five consecutive days	
Suspended sulfate	0.25 milligrams SO_3 per 100 square centimeters per day	maximum annual average	8
	0.50 milligrams SO_3 per 100 square centimeters per day	maximum 30-day value	
Lead and its compounds	**0.15** micrograms per cubic meter	maximum arithmetic **3-month** mean **concentration for a 3-year period**	10

Hydrogen Sulfide: [WAQSR Ch 3, Sec 7]

(S2) Any exit process gas stream containing hydrogen sulfide which is discharged to the atmosphere from any source shall be vented, incinerated, flared or otherwise disposed of in such a manner that ambient sulfur dioxide and hydrogen sulfide standards are not exceeded.

Odors: [WAQSR Ch 2, Sec 11]

(S3) (a) The ambient air standard for odors from any source shall be limited to an odor emission at the property line which is undetectable at seven dilutions with odor free air as determined by a scentometer as manufactured by the Barnebey-Cheney Company or any other instrument, device, or technique designated by the Division as producing equivalent results. The occurrence of odors shall be measured so that at least two measurements can be made within a period of one hour, these determinations being separated by at least 15 minutes.

(b) Odor producing materials shall be stored, transported, and handled in a manner that odors produced from such materials are confined and that accumulation of such materials resulting from spillage or other escape is prevented.

SUMMARY OF SOURCE EMISSION LIMITS AND REQUIREMENTS

Source ID#: **INC-1** Source Description: **Tail Gas Incinerator**

Pollutant	Emissions Limit/Work Practice Standard	Corresponding Regulation(s)	Testing Requirements	Monitoring Requirements	Recordkeeping Requirements	Reporting Requirements
Particulate	20 percent opacity [F3]	WAQSR Ch 3, Sec 2	Testing if required [F8]	None [F8]	Record the results of any additional testing [F14]	Report excess emissions and permit deviations [F19]
SO_2	695 lb/hr SO_2 24-hr fixed basis [F4] 93.5 % Sulfur Recovery 24-hr fixed basis [F5]	WAQSR Ch 6, Sec 3 (h)(i)(A)	Testing if required [F8]	CAM including: SO_2 CEM [F10] and continuous Sulfur Recovery Efficiency determinations [F11]	CAM records including: CEM gas sampling and resulting Sulfur Recovery Efficiency [F15]	Quarterly excess emissions report [F18] Report excess emissions and permit deviations [F19]

Source ID#: **TEG #1 & TEG #2** Source Description: **TEG Dehydrator Still Vents #1 & #2**
(Modified February 28, 2014)

Pollutant	Emissions Limit/Work Practice Standard	Corresponding Regulation(s)	Testing Requirements	Monitoring Requirements	Recordkeeping Requirements	Reporting Requirements
Particulate	20 percent opacity [F3]	WAQSR Ch 3, Sec 2(a)	Testing if required [F8]	None [F8]	Record the results of any additional testing [F14]	Report excess emissions and permit deviations [F19]
HAPS	***WAQSR Ch 5, Sec 3 and 40 CFR 63 Subparts A & HH***					

These tables are intended only to highlight and summarize applicable requirements for each source. The corresponding permit conditions, listed in brackets, contain detailed descriptions of the compliance requirements. Compliance with the summary conditions in these tables may not be sufficient to meet permit requirements. These tables may not reflect all emission sources at this facility.

Source ID#: **EG-1** Source Description: **Plant Emergency Generator**
(MODIFIED May 16, 2011) ***(Modified February 28, 2014)***

Pollutant	Emissions Limit/Work Practice Standard	Corresponding Regulation(s)	Testing Requirements	Monitoring Requirements	Recordkeeping Requirements	Reporting Requirements
Particulate	30 percent opacity [F3]	WAQSR Ch 3, Sec 2(d)	Testing if required [F8]	None [F8]	Record the results of any additional testing [F14]	Report excess emissions and permit deviations [F19]
HAPS	***WAQSR Ch 5, Sec 3 and 40 CFR 63 Subparts A & ZZZZ***					

Source ID#: **EC-1 thru EC-9** Source Description: **Compressor Engines #1 thru #9**
(MODIFIED May 16, 2011) ***(Modified February 28, 2014)***

Pollutant	Emissions Limit/Work Practice Standard	Corresponding Regulation(s)	Testing Requirements	Monitoring Requirements	Recordkeeping Requirements	Reporting Requirements
Particulate	40 percent opacity [F]	WAQSR Ch 3, Sec 2(b)	Testing if required [F8]	Verification of natural gas firing [F9]	Record the results of any additional testing [F14]	Report type of fuel fired [F17] Report excess emissions and permit deviations [F19]
HAPS	***WAQSR Ch 5, Sec 3 and 40 CFR 63 Subparts A & ZZZZ***					

Source ID#: **EB-1, EB-2 & EB-3** Source Description: **Boilers #1, #2 & #3**

Pollutant	Emissions Limit/Work Practice Standard	Corresponding Regulation(s)	Testing Requirements	Monitoring Requirements	Recordkeeping Requirements	Reporting Requirements
Particulate	40 percent opacity [F3]	WAQSR Ch 3, Sec 2(b)	Testing if required [F8]	Verification of natural gas firing [F9]	Record the results of any additional testing [F14]	Report type of fuel fired [F17] Report excess emissions and permit deviations [F19]
NO_X	0.23 lb/MMBtu [F6]	WAQSR Ch 3, Sec 3	Testing if required [F8]	Once every five years [F12]	Record monitoring results and any additional testing [F14]	Report monitoring results [F17] Report excess emissions and permit deviations [F19]

These tables are intended only to highlight and summarize applicable requirements for each source. The corresponding permit conditions, listed in brackets, contain detailed descriptions of the compliance requirements. Compliance with the summary conditions in these tables may not be sufficient to meet permit requirements. These tables may not reflect all emission sources at this facility.

ABBREVIATIONS

ACFM	Actual cubic feet per minute
AQD	Air Quality Division
BACT	Best available control technology (see Definitions)
Btu	British Thermal Unit
CAA	Clean Air Act
CAM	Compliance Assurance Monitoring
C.F.R.	Code of Federal Regulations
CO	Carbon monoxide
°F	Degrees Fahrenheit
DEQ	Wyoming Department of Environmental Quality
EPA	United States Environmental Protection Agency (see Definitions)
ESP	Electrostatic Precipitator
g	Gram(s)
gal	Gallon(s)
H_2S	Hydrogen sulfide
HAP(s)	Hazardous air pollutant(s)
hp	Horsepower
hr	Hour(s)
lb	Pound(s)
M	Thousand
MACT	Maximum available control technology (see Definitions)
mfr	Manufacturer
MM	Million
MVACs	Motor vehicle air conditioners
N/A	Not applicable
NMHC(s)	Non-methane hydrocarbon(s)
NO_X	Oxides of nitrogen
NSPS	New Source Performance Standards
O_2	Oxygen
OPP	Operating Permit Program
PM	Particulate matter
PM_{10}	Particulate matter less than or equal to a nominal diameter of 10 micrometers
ppm	Parts per million
ppmv	Parts per million (by volume)
psig	Pounds per square inch gage
QIP	Quality Improvement Plan
RICE	Reciprocating internal combustion engine
SCF	Standard cubic foot (feet)
SCFD	Standard cubic foot (feet) per day
SCM	Standard cubic meter(s)
SIC	Standard Industrial Classification
SO_2	Sulfur dioxide
SO_3	Sulfur trioxide
SSMP	Startup, shutdown and maintenance plan
TBD	To be determined
TPD	Ton(s) per day
TPH	Ton(s) per hour
TPY	Tons per year
U.S.C.	United States Code
µg	Microgram(s)
VOC(s)	Volatile organic compound(s)
W.S.	Wyoming Statute
WAQSR	Wyoming Air Quality Standards & Regulations (see Definitions)

DEFINITIONS

"Act" means the Clean Air Act, as amended, 42 U.S.C. 7401, *et seq.*

"Administrator" means Administrator of the Air Quality Division, Wyoming Department of Environmental Quality.

"Applicable requirement" means all of the following as they apply to emissions units at a source subject to Chapter 6, Section 3 of the WAQSR (including requirements with future effective compliance dates that have been promulgated or approved by the EPA or the State through rulemaking at the time of issuance of the operating permit):

(a) Any standard or other requirement provided for in the Wyoming implementation plan approved or promulgated by EPA under title I of the Act that implements the relevant requirements of the Act, including any revisions to the plan promulgated in 40 C.F.R. Part 52;

(b) Any standards or requirements in the WAQSR which are not a part of the approved Wyoming implementation plan and are not federally enforceable;

(c) Any term or condition of any preconstruction permits issued pursuant to regulations approved or promulgated through rulemaking under title I, including parts C or D of the Act and including Chapter 5, Section 2 and Chapter 6, Sections 2 and 4 of the WAQSR;

(d) Any standard or other requirement promulgated under Section 111 of the Act, including Section 111(d) and Chapter 5, Section 2 of the WAQSR;

(e) Any standard or other requirement under Section 112 of the Act, including any requirement concerning accident prevention under Section 112(r)(7) of the Act and including any regulations promulgated by EPA and the State pursuant to Section 112 of the Act;

(f) Any standard or other requirement of the acid rain program under title IV of the Act or the regulations promulgated thereunder;

(g) Any requirements established pursuant to Section 504(b) or Section 114(a)(3) of the Act concerning enhanced monitoring and compliance certifications;

(h) Any standard or other requirement governing solid waste incineration, under Section 129 of the Act;

(i) Any standard or other requirement for consumer and commercial products, under Section 183(e) of the Act (having to do with the release of volatile organic compounds under ozone control requirements);

(j) Any standard or other requirement of the regulations promulgated to protect stratospheric ozone under title VI of the Act, unless the EPA has determined that such requirements need not be contained in a title V permit;

(k) Any national ambient air quality standard or increment or visibility requirement under part C of title I of the Act, but only as it would apply to temporary sources permitted pursuant to Section 504(e) of the Act; and

(l) Any state ambient air quality standard or increment or visibility requirement of the WAQSR.

(m) Nothing under paragraphs (A) through (L) above shall be construed as affecting the allowance program and Phase II compliance schedule under the acid rain provision of Title IV of the Act.

"BACT" or "Best available control technology" means an emission limitation (including a visible emission standard) based on the maximum degree of reduction of each pollutant subject to regulation under the WAQSR or regulation under the Federal Clean Air Act, which would be emitted from or which results for any proposed major emitting facility or major modification which the Administrator, on a case-by-case basis, taking into account energy, environmental, and economic impacts and other costs, determines is achievable for such source or modification through application or production processes and available methods, systems, and techniques, including fuel cleaning or treatment or innovative fuel combustion techniques for control of such pollutant. If the Administrator determines that technological or economic limitations on the application of measurement methodology to a particular class of sources would make the imposition of an emission standard infeasible, he may instead prescribe a design, equipment, work practice or operational standard or combination thereof to satisfy the requirement of Best Available

Control Technology. Such standard shall, to the degree possible, set forth the emission reduction achievable by implementation of such design, equipment, work practice, or operation and shall provide for compliance by means which achieve equivalent results. Application of BACT shall not result in emissions in excess of those allowed under Chapter 5, Section 2 of the WAQSR and any other new source performance standard or national emission standards for hazardous air pollutants promulgated by EPA but not yet adopted by the state.

"Department" means the Wyoming Department of Environmental Quality or its Director.

"Director" means the Director of the Wyoming Department of Environmental Quality.

"Division" means the Air Quality Division of the Wyoming Department of Environmental Quality or its Administrator.

"Emergency" means any situation arising from sudden and reasonably unforeseeable events beyond the control of the source, including acts of God, which situation requires immediate corrective action to restore normal operation, and that causes the source to exceed a technology-based emission limitation under the permit, due to unavoidable increases in emissions attributable to the emergency. An emergency shall not include noncompliance to the extent caused by improperly designed equipment, lack of preventative maintenance, careless or improper operation, or operator error.

"EPA" means the Administrator of the U.S. Environmental Protection Agency or the Administrator's designee.

"Fuel-burning equipment" means any furnace, boiler apparatus, stack, or appurtenances thereto used in the process of burning fuel or other combustible material for the purpose of producing heat or power by indirect heat transfer.

"Fugitive emissions" means those emissions which could not reasonably pass through a stack chimney, vent, or other functionally equivalent opening.

"Insignificant activities" means those activities which are incidental to the facility's primary business activity and which result in emissions of less than one ton per year of a regulated pollutant not included in the Section 112 (b) list of hazardous air pollutants or emissions less than 1000 pounds per year of a pollutant regulated pursuant to listing under Section 112 (b) of the Act provided, however, such emission levels of hazardous air pollutants do not exceed exemptions based on insignificant emission levels established by EPA through rulemaking for modification under Section 112 (g) of the Act.

"MACT" or "Maximum achievable control technology" means the maximum degree of reduction in emissions that is deemed achievable for new sources in a category or subcategory that shall not be less stringent than the emission control that is achieved in practice by the best controlled similar source, as determined by the Administrator. Emission standards promulgated for existing sources in a category or subcategory may be less stringent than standards for new sources in the same category or subcategory but shall not be less stringent, and may be more stringent than:

(a) the average emission limitation achieved by the best performing 12 percent of the existing sources (for which the Administrator has emission information), excluding those sources that have, within 18 months before the emission standard is proposed or within 30 months before such standard is promulgated, whichever is later, first achieved a level of emission rate or emission reduction which complies, or would comply if the source is not subject to such standard, with the lowest achievable emission rate applicable to the source category and prevailing at the time, in the category or subcategory for categories and subcategories with 30 or more sources, or

(b) the average emission limitation achieved by the best performing five sources (for which the Administrator has or could reasonably obtain emissions information) in the category or subcategory for categories or subcategories with fewer than 30 sources.

"Modification" means any physical change in, or change in the method of operation of, an affected facility which increases the amount of any air pollutant (to which any state standards applies) emitted by such facility or which results in the emission of any such air pollutant not previously emitted.

"Permittee" means the person or entity to whom a Chapter 6, Section 3 permit is issued.

"Potential to emit" means the maximum capacity of a stationary source to emit any air pollutant under its physical and operational design. Any physical or operational limitation on the capacity of a source to emit an air pollutant, including air pollution control equipment and restrictions on hours of operation or on the type or amount of material combusted, stored or processed, shall be treated as part of its design if the limitation is enforceable by EPA and the

Division. This term does not alter or affect the use of this term for any other purposes under the Act, or the term "capacity factor" as used in title IV of the Act or the regulations promulgated thereunder.

"Regulated air pollutant" means the following:

(a) Nitrogen oxides (NO_X) or any volatile organic compound;

(b) Any pollutant for which a national ambient air quality standard has been promulgated;

(c) Any pollutant that is subject to any standard established in Chapter 5, Section 2 of the WAQSR or Section 111 of the Act;

(d) Any Class I or II substance subject to a standard promulgated under or established by title VI of the Act; or

(e) Any pollutant subject to a standard promulgated under Section 112 or other requirements established under Section 112 of the Act, including Sections 112(g), (j), and (r) of the Act, including the following:

(i) Any pollutant subject to requirements under Section 112(j) of the Act. If EPA fails to promulgate a standard by the date established pursuant to Section 112(e) of the Act, any pollutant for which a subject source would be major shall be considered to be regulated on the date 18 months after the applicable date established pursuant to Section 112(e) of the Act; and

(ii) Any pollutant for which the requirements of Section 112(g)(2) of the Act have been met, but only with respect to the individual source subject to Section 112(g)(2) requirement.

(f) Pollutants regulated solely under Section 112(r) of the Act are to be regulated only with respect to the requirements of Section 112(r) for permits issued under this Chapter 6, Section 3 of the WAQSR.

"Renewal" means the process by which a permit is reissued at the end of its term.

"Responsible official" means one of the following:

(a) For a corporation:

(i) A president, secretary, treasurer, or vice-president of the corporation in charge of a principal business function, or any other person who performs similar policy or decision-making functions for the corporation; or

(ii) A duly authorized representative of such person if the representative is responsible for the overall operation of one or more manufacturing, production, or operating facilities applying for or subject to a permit and either:

(A) the facilities employ more than 250 persons or have gross annual sales or expenditures exceeding $25 million (in second quarter 1980 dollars); or

(B) the delegation of authority to such representative is approved in advance by the Division;

(b) For a partnership or sole proprietorship: a general partner or the proprietor, respectively;

(c) For a municipality, State, Federal, or other public agency: Either a principal executive officer or ranking elected official. For the purposes of this part, a principal executive officer of a federal agency includes the chief executive officer having responsibility for the overall operations of a principal geographic unit of the agency; or

(d) For affected sources:

(i) The designated representative or alternate designated representative in so far as actions, standards, requirements, or prohibitions under title IV of the Act or the regulations promulgated thereunder are concerned; and

(ii) The designated representative, alternate designated representative, or responsible official under Chapter 6, Section 3 (b)(xxvi) of the WAQSR for all other purposes under this section.

"WAQSR" means the Wyoming Air Quality Standards and Regulations promulgated under the Wyoming Environmental Quality Act, W.S. §35-11-101, *et seq.*

Appendix A

Compliance Assurance Monitoring (CAM) Plan

This document outlines the details of the Compliance Assurance Monitoring (CAM) plan for SO_2 emissions from the Sulfur Recovery Unit (SRU) located at the Elk Basin Gas Plant in Park County, Wyoming. This document also fulfills federal and state requirements for a written Quality Assurance/Quality Control (QA/QC) plan for the Continuous Emissions Monitoring System (CEMS) used to measure SO_2 emissions at the facility. It incorporates specifications as defined in the operating permit issued by the State of Wyoming and the Code of Federal Regulations (CFR) 40, part 60.

This document is organized as follows:

- Sections 1.0 through 3.0 outline Elk Basin Gas Plant, the gas treating facility, CEMS, and CAM details
- Section 4.0 describes the QA/QC plan.
- Sections 5.0 through 7.0 outline the weekly, quarterly, and annual testing performed as described in the QA/QC plan.
- Section 8.0 outlines the recordkeeping requirements of the operating permit.
- Sections 9.0 and 10.0 outline an activity list and a trouble-shooting list to follow in the operation of the CEMS.

Section **Page**

Preface 1
Table of Contents 2
Plan Distribution List 5

1.0 Introduction 6
1.1 Management Approval 6
Figure 1-1 CEMS Quality Assurance Personnel 7

2.0 Facility Description 8
2.1 Overview 8
2.2 Process Description 8
Figure 2-1 Process Flow Diagram 9

3.0 CEMS 10
3.1 Overview 10
3.1.1 Monitoring Approach 10
3.1.1.1 Mass Balance Monitoring Approach 10
3.2 Components 10
3.2.1 H_2S and SO_2 Concentrations (Brimstone Analyzer) 10
3.2.2 Sulfur Recovery Efficiency (SRE) 11
3.2.3 Data Acquisition System (DAS) 11
3.3 System Operation 11
3.3.1 Brimstone Analyzer System 12
3.3.2 Sulfur Recover Efficiency (SRE) 12
3.3.3 SRE Approach/Rationale 13
3.3.3.1 Inlet Sulfur Flow Rate 13
3.3.3.2 Outlet Sulfur Flow Rate 14
Table 3-1 Ranges and Typical Readings 15

4.0 QA/QC Plan 16
4.1 Regulations 16
4.2 Standards of Operation 17
Table 4-1 Emission Limits 17
4.3 QA/QC Plan 17
4.3.1 Level 1 – Calibration 17
4.3.2 Level 2 – CGA 18
4.3.3 Level 3 – RATA 18

Section | Page

5.0 Calibrations 19
5.1 Overview 19
5.1.1 Definitions 19
5.1.2 CD Requirement 19
5.1.2.1 Gas Analyzer 20
5.1.3 Excessive CD 20
5.1.4 Out-Of-Control 20
5.1.5 Data Status 20
5.2 Site Specific 20
5.2.1 H_2S and SO_2 20
Table 5-1 Operation Parameters – PPM 21
Table 5-2 Calibration Drift Limits 21
5.3 Record Keeping 21

6.0 Quarterly Audits 22
6.1 Overview 22
6.2 CGA (Cylinder Gas Audit) 22
6.2.1 Audit Gasses 22
6.2.2 Relative Accuracy 22
6.2.3 Out-Of-Control 22
6.2.4 Data Status 23
6.3 Audit Gas Ranges 23
Table 6-1 Audit Gas Ranges 23
6.4 Reports 23

7.0 Annual Rata 24
7.1 Overview 24
7.2 Implementation 24

8.0 Record Keeping 25
8.1 Overview 25
8.2 Plant Operation 25
8.3 Data 25
8.4 Inventory 25
8.5 Maintenance 25

9.0 Activities 26
9.1 Brimstone Analyzer 26
9.1.1 Daily Activities 26
9.1.2 Quarterly 26
9.1.3 Annually 26

Section **Page**

10.0 Trouble-Shooting 27

APPENDICIES

Appendix A Spare Parts List

Appendix B Permits
WDEQ Permits:
- Chapter 6, Section 3, Permit No. 31-045 (Issued February 19, 2003)

Appendix C Regulations
- 40 CFR 60, Subpart A – General Provisions
- 40 CFR 60, Subpart LLL – Standards of Performance for Onshore Natural Gas Processing: SO_2 Emissions
- 40 CFR 60, Appendix B – Performance Specifications
- 40 CFR 60, Appendix F – Quality Assurance Procedures

Copy No.	Name/Title	Location
1	Production Superintendent	Plant Site
2	Plant Foremen (2 copies)	Plant Site
3	Plant EHS Representative	Plant Site
4	Plant IT Representative	Plant Site
5	Corporate Air Quality Department	Corporate Office

Howell Petroleum Corporation (Howell), a wholly owned subsidiary of Anadarko Petroleum Corporation, operates the Elk Basin Gas Plant, a gas treating facility located in the Section 29, T58N, R99W, approximately sixteen (16) miles north of Powell, in Park County, Wyoming. The facility operates under Wyoming Department of Environmental Quality (WDEQ) air operating permit #31-045. The renewal permit was issued by the WDEQ on February 19, 2003. Most of the emission units at the Elk Basin Gas Plant are operating under grandfathered status; therefore, they have no applicable requirements. As a result, periodic monitoring is not required for this facility. However, the tail gas incinerator was added to the sulfur recovery plant in 1993 and requires a continuous emissions monitoring system (CEMS), as well as a compliance assurance plan (CAM) and CEMS QA/QC plan in order to comply with the existing and future permit conditions. In accordance with the permit requirements, Anadarko, operates and maintains a CEMS for monitoring SO_2 emissions discharged to the atmosphere from the tail gas incinerator (INC-1) at the facility. The purpose of the CEM is to monitor the equivalent levels of SO_2 emissions in the tail gas stream exiting the Sulfur Recovery Unit (SRU). The sulfur compounds in the SRU tail gas stream are then burned in the incinerator and converted to SO_2. This information is also used for calculating and monitoring the efficiency of the sulfur recovery unit (SRU). The monitoring system is comprised of the following basic components:

- Brimstone BRM-942TG analyzer which measures H_2S and SO_2 ppm
- A PC based data acquisition system that calculates equivalent SO_2 emissions on a lb/hr basis from the Tail Gas Incinerator (INC-1)
- Sulfur Recovery Efficiency (SRE) is also calculated in the data acquisition system and monitored.

1.1 Management Approval

Quality assurance and quality control (QA/QC) is a priority for Anadarko. Operation of the facility's CEMS is the responsibility of the Operations Department. Anadarko's testing program is comprised of calibration of the CEMS three times per week, quarterly cylinder gas audits (CGA), and annual relative accuracy test audits (RATA). The testing program combined with existing procedures of accuracy, completeness, and corrective policies ensure the integrity of the data collected by the CEMS and forms the foundation of the Howell QA/QC program.

This QA/QC Plan has been prepared and implemented as part of Howell's continuing effort to control and minimize emissions. Copies of this plan have been made available to all necessary plant personnel. This plan will be revised as required by changes in the CEMS, or as required by the monitoring agency.

Signature: [illegible] Date: 4th February 2004.

Name: Richard Hart Title: Operations Manager

Figure 1-1
Elk Basin Gas Plant
CEMS Quality Assurance Personnel

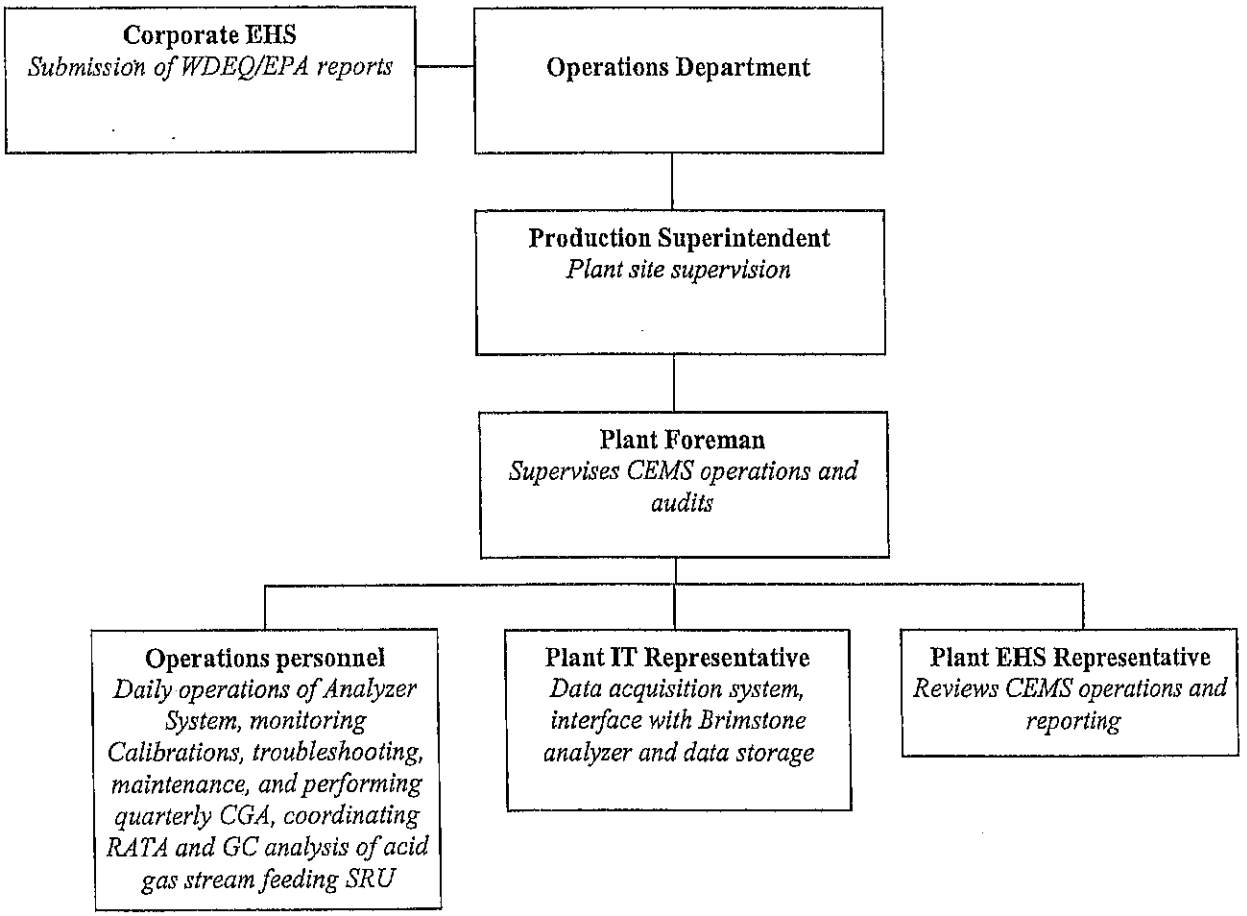

2.1 Overview

The Elk Basin Gas Plant in Park County, Wyoming was issued Chapter 6, Section 3 Permit No. 31-045 (issued 02/19/03) by the WDEQ to renew the existing operating permit for the facility.

2.2 Process Description

The Elk Basin Facility consists of the basic processing units as shown in the Figure 2-1 on the following page. The facility is a sour gas processing and natural gas liquids (NGL) recovery plant. The plant is capable of processing an inlet sour gas rate of 10 million standard cubic feet per day (MMSCFD) with approximately 12% hydrogen sulfide (H_2S) and 10% carbon dioxide (CO_2). Gas from the inlet is compressed and enters one of the amine sweetening units where most of the CO_2 and H_2S are removed. Water is removed from the sweetened gas through contact with triethylene glycol (TEG).

Natural gas liquid components are removed from the processed gas in a lean oil system, while the recovered acid gas from the amine system is cooled and processed through the sulfur recovery unit (SRU). The SRU is comprised of two reaction furnaces/waste heat boilers followed by two Claus beds and condensers common to both reaction furnace/waste heat boilers. The Claus plant converts H_2S to liquid elemental sulfur and is recovered from the condensers. The tail gas stream from the SRU is then incinerated in a tail gas incinerator (INC-1) to convert all remaining H_2S and sulfur compounds to SO_2 prior to venting to the atmosphere. The incinerator (INC-1) is designed to oxidize the sulfur plant tail gas stream to a thermal destruction efficiency of 98%. The INC-1 stack is approximately 80 feet in height and 5' in diameter and is the primary emission point for the SO_2 emissions.

The SO_2 emissions from the facility are measured, calculated and reported through the CEMS for the SRU/Incinerator. The CEMS is primarily comprised of the Brimstone analyzer system and data acquisition system. The Brimstone analyzer sample probe, which measures SO_2 and H_2S PPM, is located on the SRU tail gas stream prior to the gases entering the incinerator. The mass flowrate of the SRU tail gas stream is calculated based on inlet acid gas and air feed to the reaction furnaces. Utilizing calculated SRU tail flowrate and measured values for H_2S and SO_2 along with factors for other sulfur compounds, the SO_2 emissions from the incinerator are calculated. The CEMS also calculates and records the lb/hr of equivalent sulfur feeding the SRU, the SO_2 lb/hr emission rate, and the calculated sulfur recovery efficiency (SRE). These readings are recorded continuously and a five minute average, a 15 minute average, and an hourly average is provided. The hourly average and 15 minute average is recorded in the data acquisition system.

Figure 2-1
Process Flow Diagram

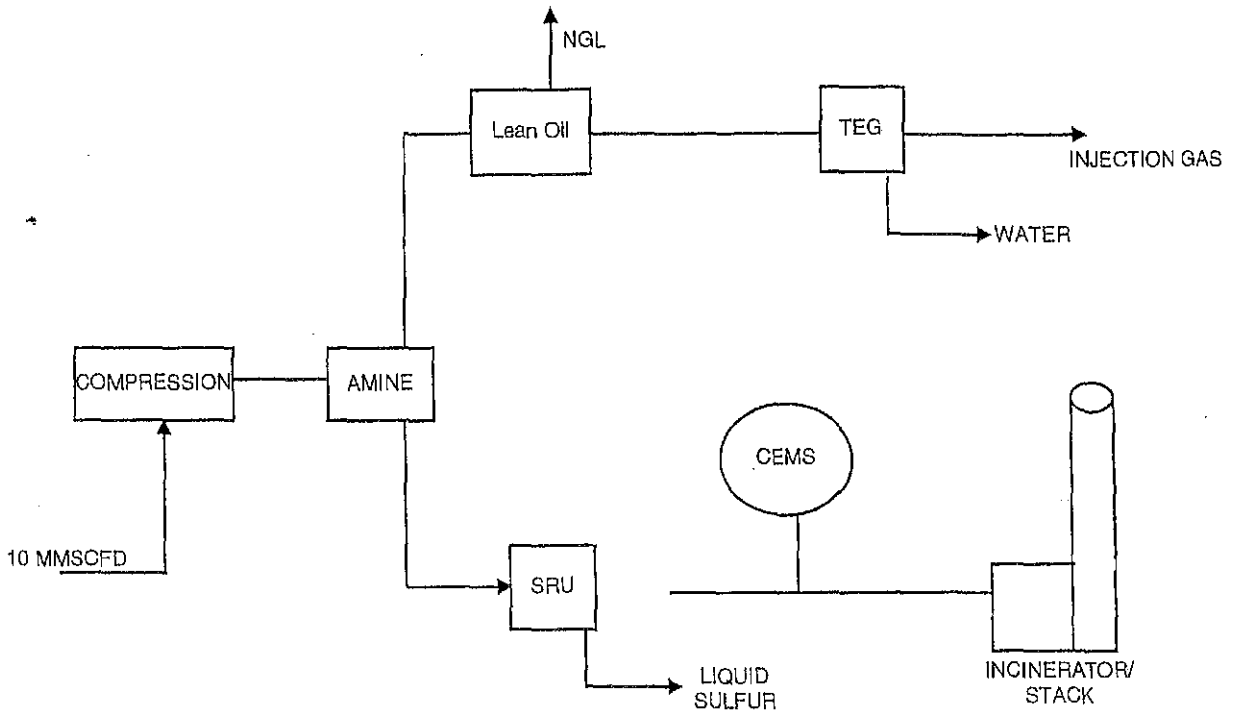

3.1 Overview

The CEMS is the total equipment and or procedures required for the determination of the SO_2 emission rate and SRU efficiency to demonstrate permit compliance. At the Elk Basin Gas Plant, the CEMS is basically comprised of the Brimstone analyzer system and data acquisition system. Additional monitoring of the SRU performance is also monitored as required by the permit. Brief descriptions of these systems are presented below under *Section 3.2 Components.* The integration of these components is described in *Section 3.3 System Operation.*

3.1.1 Monitoring Approach

Due to the difficulties in measuring flow prior to (turbulent flow) and after the incinerator (very low flow), a theoretical flow model monitoring system is used to calculate the mass flowrate of the SRU effluent. This mass balance approach is used in the calculations for demonstrating continuous compliance with the SO_2 emission limit, averaged over a 24 hour period. Federal Regulations 40 CFR 60, Appendix F, as well as State Regulations, apply to this monitoring system.

3.1.1.1 Mass Balance Monitoring Approach Includes:

- Measuring the amount of acid gas entering the SRU in terms of equivalent sulfur.
- Calculating the SRU tail gas flow rate in terms of the total sulfur species through the use of the Brimstone analyzer.
- Using these measurements to determine the sulfur recovery efficiency (SRE) and the SO_2 emissions rate from the incinerator.

The approach is not dependent on knowing or measuring the amount of sulfur recovered and routed to the sulfur pit.

3.2 Components

3.2.1 H_2S and SO_2 Concentrations (Brimstone Analyzer)

The H_2S and SO_2 concentrations are measured by a Brimstone Model BRM-942TG ultraviolet analyzer which measures the H_2S and SO_2 in parts per million by volume (ppmv). The analyzer probe is installed in the piping between the SRU and incinerator while the sample oven and processing system is located in the analyzer shelter located near the final sulfur condenser. The measured values for H_2S and SO_2 are transmitted to the PC data acquisition system for calculation of the pounds of sulfur in the SRU tail gas stream and SRE.

3.2 Components, Continued

3.2.2 Sulfur Recovery Efficiency (SRE)

A PC based data acquisition system calculates the efficiency (SRE) of the sulfur recovery unit (SRU) four times every hour. This calculation is based on weekly chromatograph analysis of the SRU acid gas feed for concentrations of sulfur components. Combination of the acid gas flowrate to the SRU and the measured concentration of sulfur components in the feed allows for calculation of the total equivalent pounds of sulfur feeding the SRU. By utilizing the calculated equivalent pounds of sulfur in the SRU effluent as described above, the sulfur recovery efficiency (SRE) can be calculated. The permit requires 93.5% minimum sulfur recovery efficiency over a 24-hour average. This means that 93.5% of the inlet sulfur compounds must be converted to liquid sulfur and recovered as a product.

3.2.3 Data Acquisition System (DAS)

A PC based data acquisition system (DAS) is used to collect and record data from the Brimstone analyzer system. The DAS also performs calculations for the following basic parameters.

1) SRU tail gas flowrate (based on material balance of the SRU feeds)
2) Incinerator effluent SO_2 lb/hr
3) Pounds per hour of sulfur in the SRU tail gas
4) Pounds per hour of sulfur in the SRU inlet acid gas (acid gas flow is measured, while weekly chromatograph results provides the H_2S concentrations)
5) Sulfur Recovery Efficiency: 93.5% minimum 24-hour average

The mass flowrate of the SRU tail gas stream is calculated based on inlet acid gas and air feed flowrates to the reaction furnaces. Utilizing calculated SRU tail flowrate and measured parts per million (ppm) for H_2S and SO_2 along with factors for other sulfur compounds the SO_2 emissions from the incinerator are calculated as pounds per hour. The permit allows for 695 pounds per hour (fixed 24-hour average) of SO_2 to be emitted from the tail gas unit exhaust stack (INC-1). The system stores analyzer data, calculates SRE, and produces various reports as required by the permit

3.3 System Operation

The integration of the Brimstone analyzer components, data acquisition system and other required monitoring parameters are described below.

3.3 System Operation, Continued

3.3.1 Brimstone Analyzer System

The Brimstone analyzer system measures the H_2S and SO_2 concentrations in the SRU tail gas stream. The analyzer probe is located on the SRU piping to the tail gas incinerator. The tail gas samples are routed via heat traced sample lines to the analyzer shelter where they are analyzed for H_2S and SO_2 concentrations. The analyzer system transmits the measured concentration of H_2S and SO_2 to the data acquisition system for calculation of the SO_2 lb/hr emissions and SRE. The analyzer system has been designed so that the operator initiates the calibration mode once daily. The DAS records span and calibration drift results for the analyzer. If the analyzer has detected that an error or malfunction occurred during the calibration mode, then an alarm is activated on the analyzer and PC screen. Upon receipt of this alarm the plant operator will have the option to activate another attempt at the calibrations, or investigate the system further prior to initiating a second calibration. The specific procedures and guidelines for calibration of the CEMS are found in *Section 5*. Quarterly and annual procedures are found in Section 6 and Section 7, respectively.

3.3.2 Sulfur Recovery Efficiency (SRE)

Calculation and monitoring of the SRE is required by the permit and is the measure for determining how efficient the SRU is in removing the sulfur from the acid gas stream. The PC based data acquisition system performs this calculation, displays the value for the plant operator, and records all past values in the DAS historian. Plant operators perform a weekly chromatograph analysis on a gas sample of the SRU feed to determine the concentration of H_2S in the feed to the SRU. The percent H_2S in the acid gas feed is entered into the PC based data acquisition system. With this value in the DAS, and with the acid gas flowrate measured by the SRU inlet meter, the equivalent pounds of sulfur contained in the acid gas is calculated by the DAS. By utilizing the calculated amount of sulfur in the SRU effluent stream as measured by the Brimstone analyzer, the SRE is calculated by equations shown below as defined by the WDEQ.

3.3 System Operation, Continued

3.3.3 SRE Approach/Rationale

Sulfur recovery efficiency (SRE) is computed by dividing the difference between the total sulfur flow rate entering the SRU and the total sulfur flow rate exiting the SRU by the total sulfur flow rate entering the SRU.

% Recovery = {(Inlet Sulfur Rate – Outlet Sulfur Rate) / Inlet Sulfur Rate} * 100%

As shown in the above equation, the SRE consists of two variables both of which can be computed using known variables inherent to the sulfur recovery process.

3.3.3.1 Inlet Sulfur Flow Rate

The inlet sulfur rate is calculated by multiplying the known molar concentration of H_2S in the SRU feed gas by the total flow rate of feed gas entering the SRU. The overall feed gas rate is measured by existing meters on the acid gas stream. The H_2S concentration is measured via chromatographic analysis. A sample is pulled at least once every week and the inlet concentration is adjusted in the calculation if needed.

Feed gas entering the SRU is water saturated. Since chromatograph data is expressed on a dry basis, it is inappropriate to determine the sulfur flow rate content by simply multiplying the feed gas rate by the measured H_2S concentration. Thus the H_2S concentration must first be converted to wet basis via the following equation:

$$H_2S\% \text{ (wet)} = H_2S\ \%\text{(dry)}*(100-\%\ H_2O_{feed})/100$$

Where:
$\%\ H_2O_{feed}$ = Water concentration in the feed gas

The water concentration in the feed gas can be computed as function of the flowing temperature and pressure through the use of the water vapor pressure of the acid gas stream. It can be expressed as follows:

$$\%\ H_2O_{feed} = \{Pv_{(H2O)} / Pg + Pa/2.036\}*100$$

Where:
$Pv_{(H2O)}$= Vapor pressure of water (psia)
Pg = Feed flowing pressure (psig)
Pa = Local atmospheric pressure (in Hg)
2.036 is a factor to convert Hg to psi

3.3 System Operation, Continued

3.3.3 SRE Approach/Rationale, Continued

3.3.3.1 Inlet Sulfur Flow Rate, Continued

The stream water vapor pressure can be expressed in terms of the stream flowing temperature through the following equation:

$Ln\ (Pv_{(H2O)}) = a + b/T + c/T + d/T^2$, Ln = natural log

Where:

T= SRU feed gas Temperature (°R)
a = constant = 14.1313
b = constant = 0.000145628
c = constant = -6609.292
d = constant = -767871.1

Once the water concentration of the feed gas is known, it can be used to compute the wet basis H_2S concentration using equation listed previously. Calculations of the inlet sulfur flow rate can now be determined using the following equation:

S_{inlet} (lb/hr) = Q_{feed}(MSCF/hr) * %H_2S(wet) * 2.635 * 32.065

Where:
Q_{feed} = Inlet flow rate to the SRU
2.635 = conversion factor (lb-mol/MCF)
32.065 = molecular weight of sulfur (lb/lb-mole)

3.3.3.2 Outlet Sulfur Flow Rate

The tail gas flow rate is determined by material balance using the measured inlet flow rate and concentration of the H_2S and SO_2 in the tail gas as the primary variables. Under the material balance approach, the total tail gas flow rate is determined by adding the individual molar flow rates of each component in the tail gas. Individual components found in the tail gas are either introduced through the SRU feed and combustion air, or produced via chemical reaction in the SRU process.

3.3 System Operation, Continued

3.3.3 SRE Approach/Rationale, Continued

3.3.3.2 Outlet Sulfur Flow Rate, Continued

Since plant test data is used to determine the outlet sulfur rate, a correction factor (L) is added to the equation to determine the recovery efficiency to relate the SO_2 emissions calculated during a performance test to an EPA reference stack test. See discussion below for QA/QC procedures. The corrected recovery efficiency can be expressed as follows:

$$\%Recovery = (S_{inlet} - S_{Outlet}) / S_{Inlet} * 100\% + L$$

Plant emissions can be calculated as follows:

$$\text{Sulfur Emissions (lb/hr)} = (100 - \%Recovery) * S_{inlet} / 100$$

Emissions must be expressed on an SO_2 equivalent basis.

Table 3-1
Ranges and Typical Readings

VARIABLE	UNITS	RANGE	REMARKS
SRU Tail gas : SO_2	Mol %	0-2%	Measured- Brimstone
SRU Tail gas : H_2S	Mol %	0-4%	Measured- Brimstone
Incinerator SO_2 emissions	LB/HR	695	Calculated- permit limit shown
Sulfur Recovery Efficiency	%	93.5	Calculated- permit limit shown

This QA/QC plan includes the procedures, policies, and specifications required for Howell to operate and maintain its CEMS at the gas treatment facility in compliance with federal and state regulations.

Adherence to this QA/QC plan is necessary to maintain the CEMS, satisfy performance specifications, and to produce required validated data and reports.

4.1 Regulations

The gas treatment facility is subject to the regulations and requirements set forth in:

- 40 CFR 60, Subpart A – General Provisions
- 40 CFR 60, Subpart LLL – Standards of Performance for Onshore Natural Gas Processing: SO_2 Emissions
- 40 CFR 60, Appendix B – Performance Specifications
- 40 CFR 60, Appendix F – Quality Assurance Procedures
- WDEQ Chapter 6, Section 3 Permit No. 31-045

Copies of the Air Quality Permits can be found in Appendix B of this document. Copies of the regulations can be found in Appendix C of this document. These regulations and requirements provide the structure of the validation process and the performance specifications of this QA/QC plan.

40 CFR 60, Appendix F (Quality Assurance Procedures) requires the following activities:

1. Develop a written QA/QC plan for the CEMS.

2. Perform Calibration Drift (CD) checks (Section 5).

3. Conduct quarterly accuracy audits (Sections 6 and 7). For gas analyzers, audits are done by either cylinder gas audit (CGA) or relative accuracy test audit (RATA).

4. If excessive inaccuracy occurs for two or more quarters, the policies and procedures in this document must be revised.

5. Calibration and accuracy audit data must be submitted with the quarterly reports (Section 8).

Specific information for each requirement can be found in each section.

4.2 Standards of Operation

The air quality permit specifies the emission limits and monitoring data to be recorded and reported in addition to the requirements found in the CFR. These limits are listed in Table 4-1. The emission limits for the CEMS are found in Sections F3 and F4 and the monitoring requirements are found in Sections F9 and F10 of the WDEQ permit.

Table 4-1
Emission Limits

Constituent	Unit	Limit
SO_2	Lb/hr	695 (24-hour average)
Sulfur Recovery Efficiency (SRE)	%	93.5% (minimum 24-hour average)

4.3 QA/QC Plan

The QA/QC plan at the Elk Basin Gas Plant is comprised of two distinct and equally important functions; Quality Assurance and Quality Control. The three-tiered levels of testing (CD, CGA, and RATA), coupled with maintenance checks at each level, form the quality control portion of the plan. The control policies implemented at each level are the quality assurance portion of the plan.

Maintenance and corrective action procedures are found in Section 9, and recommended spare parts list are found in Appendix A of this document.

4.3.1 Level 1 - Calibration

The operator initiates the calibration mode once daily as required by 40 CFR 60.13(d). Zero gas (instrument air) is introduced to the cell of the analyzer during calibrations. Records of calibration data are sent from the analyzer to the DAS and stored as electronic files. Calibration and drift results are also recorded in a site specific Excel spreadsheet which tracks any five day or single out of control periods. A description of procedures for manual calibrations is presented in the Operations Section of the Brimstone Analyzer instruction manual.

Calibration drift (CD) is determined and adjusted if outside the acceptable range. If a system check fails to fall within the control limits, corrective action is taken. Corrective actions may include checking the lamp, sample flowrate, and cleaning the optics.

4.3 QA/QC Plan, Continued

4.3.1 Level 1 - Calibration, Continued

A weekly inspection of the analyzer will be performed. The overall condition of the system, and specifically oven temperature and sample flow rate, is checked. Oven temperature is adjusted if it falls outside the acceptable range.

A record of the weekly inspections will be kept in a logbook at the analyzer location. Checks and adjustments performed are noted, dated, and initialed by the operator.

4.3.2 Level 2 - CGA

A cylinder gas audit (CGA) for both H_2S and SO_2 is conducted quarterly, except during the quarter in which a RATA is performed. The analyzer is configured to store CGA data in a location separate from that obtained during daily checks by entering the "Cal" mode. More stringent maintenance is performed at this time in addition to Level 1 requirements. If the monitor or analyzer is determined to be out of control, corrections or replacements are made

Audit gases used are certified calibration gas standards. Each audit gas is run three times, and the average value for each audit point is calculated. Corrective action may include checks of optics, oven temperature, and sample flow rate. Another cylinder gas audit is performed following corrective action to assess whether the system is operating properly. Details of the audit procedure can be found in 40 CFR, Part 60, Appendix F.

4.3.3 Level 3 - RATA

A relative accuracy test audit (RATA) is performed annually to measure SO_2 from the incinerator. Testing is conducted in accordance with procedures outlined in the Code of Federal Regulations (CFR) 40, Part 60, Appendix A, Reference Methods 1, 2, 3A, 4, and 6 (or 6C), and Appendix B, Performance Specification 2. Note emission flowrate is calculated, not measured.

Acceptable limits of relative accuracy are ± 20% of the reference method for SO_2 concentration, or ± 10% of the applicable SO_2 emission rate standard, whichever is greater. If the relative accuracy is determined to be outside the acceptable limits, necessary corrective actions are taken to repair the system. Another RATA is performed following corrective action to assure that the CEMS is operating within specifications.

5.1 Overview

Calibration of the CEMS is governed under the 40 CFR Part 60, Appendix B. Specification No. 2 governs the SO_2 CEMS in stationary sources. Specification No. 7 governs the H_2S CEMS in stationary sources. Specification No. 6 is used to evaluate the acceptability of the CEMS in stationary sources.

5.1.1 Definitions

Diluent Gas – A major gaseous constituent in a gaseous pollutant mixture. For combustion sources, CO_2 and O_2 are the major gaseous constituents of interest.

Pollutant Gas – A gaseous pollutant constituent in a gaseous pollutant mixture. For combustion sources, NO_X and SO_2 are some of the major gaseous pollutants of interest.

Span Value – The upper limit of a gas concentration measurement range that is specified for affected source categories applicable to the operation of the analyzer.

Zero, Low-Level, and High-Level Values – The CEMS response values related to the source specific span value. Determination of zero, low-level, and high-level values is defined in the appropriate sub-section for each analyzer.

Calibration Drift (CD) – The difference in the CEMS output reading from a reference value after a period of operation during which no unscheduled maintenance, repair, or adjustment took place. The reference value may be supplied by a cylinder gas, gas cell, or optical filter and need not be certified.

Relative Accuracy (RA) – The absolute mean difference between the gas concentration or emission rate determined by the CEMS and the value determined by the Reference Method (RM) plus the 2.5 percent error confidence coefficient of a series of test divided by the mean of the RM tests or the applicable emission limit.

5.1.2 CD Requirement

CD checks must be performed on each monitor at the zero (or low-level) and the high-level daily (approximately every 24 hours), per 40 CFR, Part 60 Appendix B. The Brimstone analyzer system has been designed so that the operator initiates the calibration mode once daily as defined in 40 CFR 60.13(d).

5.1 Overview, Continued

5.1.2 CD Requirement, Continued

5.1.2.1 Gas Analyzer

A zero gas, instrument air, or a calibration gas between 0-20% of span value can be used for the low-level. The high-level calibration gas must be between 50-100% of the span value.

5.1.3 Excessive CD

If the monitor exceeds either the low-level or high-level value by ± twice the performance specifications (PS) for five consecutive CD checks, the monitor is out-of-control. If the monitor exceeds either the low or high-level calibration gas value by ± four times the PS during any one CD check, the monitor is out-of-control.

5.1.4 Out-of-Control

The beginning of the out-of-control period is the time corresponding to the completion of the fifth, consecutive, CD check in excess of twice the PS, or the time corresponding to the completion of a single CD check resulting in an excess of four times the PS. The end of the out-of-control period is the time corresponding to the end of the CD check following corrective action which the monitor's low and high CD are no longer excessive (40 CFR 60, Appendix F 4.3.1).

5.1.5 Data Status

All data during an out-of-control period is voided. It is not to be used in calculating emission compliance, nor counted towards meeting the minimum data availability as required by the operating permit and/or the applicable subpart in 40 CFR Part 60.

5.2 Site Specific

The following tables describe the limits and operating parameters for the specific monitors and analyzers of the CEMS at the Elk Basin Gas Plant.

5.2.1 H_2S and SO_2

The following tables are for the Brimstone Model BRM- 942TG SO_2 analyzer described in Section 3.2.1 of this document.

5.2 Site Specific, Continued

5.2.1 H_2S and SO_2, Continued

Table 5-1
Operational Parameters – mol %

Location	Span	Zero	High	PS
SRU effluent: H_2S	0-4	0-0.8	2-4	0.2
SRU effluent: SO_2	0-2	0-0.4	1-2	0.05

Table 5-2
Calibration Drift Limits

Location	5-Day Continuous CD	Single CD
SRU effluent: H_2S	±0.4 mol %	±0.8 mol %
SRU effluent: SO_2	±0.1 mol %	±0.2 mol %

5.3 Record Keeping

All measurements; all out-of-control periods; all continuous monitoring system or monitoring device calibration checks; periods of excess emissions; adjustments, malfunctions, and maintenance performed on these systems and devices are retained on file by Howell for at least five years, as required by Section F12 of the operating permit. This information is used to generate sections of the respective reports to the WDEQ.

6.1 Overview

The Brimstone analyzer is challenged in a Cylinder Gas Audit (CGA) once a calendar quarter for three (3) quarters. These audits are a minimum of two (2) months apart. During the fourth quarter of this cycle, a Relative Accuracy Test Audit (RATA) is performed.

The CGA is performed by measuring each audit gas two times and averaging the results. These results are then compared to the calibration gas value.

6.2 CGA (Cylinder Gas Audit)

6.2.1 Audit Gasses

Audit gasses are certified by comparison to National Bureau of Standards (NBS) gaseous Standard Reference Materials (SRM) or NBS/EPA approved gas manufacturer's Certified Reference Materials (CRM) following EPA Traceability Protocol No. 1.

6.2.2 Relative Accuracy

The limit for accuracy on the monitor is ±15% of the average audit value, or ±5 ppm, whichever is greater, at each audit point.

6.2.3 Out-of-Control

If the CGA exceeds this limit, the analyzer is considered out-of-control. When a monitor is out-of-control, corrective action must be taken to eliminate the problem. Following corrective action another CGA must be performed to determine if the monitor is operating within the specifications. The out-of-control CGA results and the results of the CGA after corrective action was taken must be recorded.

The out-of-control period begins with the completion of the CGA. The period ends at the time corresponding with the completion of the sampling of subsequent successful CGA.

6.2 CGA, Continued

6.2.4 Data Status

During the out-of-control period, the data collected may not be used in calculating emission compliance nor be counted towards meeting minimum data availability.

6.3 Audit Gas Ranges

The following table defines the audit gas ranges used for Howell CEMS during a CGA. The ranges are based on the operating span of the Brimstone analyzer.

Table 6-1
Audit Gas Ranges: mol %

Monitor	Location	Audit Point 1	Audit Point 2
Brimstone : H_2S	SRU effluent	0.8-1.2	2-2.4
Brimstone : SO_2	SRU effluent	0.4-0.6	1-1.2

6.4 Reports

The results of the quarterly CGA for the analyzer are kept by Howell for minimum of five years. The report includes who performed the audit, when the audit was performed the audit gasses used, the monitor values during the audit, any adjustments or maintenance performed, and any periods that the monitor was out-of-control. A copy of the CGA report is included with each respective quarterly report submitted to the WDEQ.

7.1 Overview

Once a year, the CEMS is challenged for incinerator SO_2 emissions by a RATA. The RATA is more extensive in scope when compared to a quarterly CGA. During a RATA, the CEMS is tested a minimum of nine (9) times for a period of not less than 21 minutes of normal operation. The average reading during each test is averaged and compared to the results of a Reference Method (RM), which is performed simultaneously. The RA of each test is averaged. The average RA must be within the PS of the methods used as set forth in the 40 CFR, Part 60.

If an instrument is out-of-control as a result of the RATA, another RATA must be performed after any or all corrective actions.

The RATA must be performed by an uninterested third party.

7.2 Implementation

Annually, Howell contracts a vendor to perform a RATA of the CEMS. A RATA is performed instead of a CGA. Data during the out-of-control period are not used for minimum reporting requirements, or emission averaging. The results of each RATA are kept for the duration as defined by the permit requirements. The results are included in the respective quarterly report.

The WDEQ will be notified at least 30 days prior to the performance of any RATA test, in accordance with permit requirements.

8.1 Overview

Permit condition F12 and F13, referring to the record keeping requirements included in 40 CFR 60, Subpart LLL, outlines the minimum record-keeping that is required. Howell fulfills all of these requirements.

8.2 Plant Operation

Howell keeps a log of all operation hours for the CEM. In this log is a listing for all operation, downtime, scheduled maintenance, non-operation of pollution control devices, and start-ups.

8.3 Data

Howell maintains a record of all data colleted by the CEMS in the DAS. This information is retrieved for the generation of the quarterly reports. Copies of these reports may be found in the Operations office at the facility.

8.4 Inventory

Inventory lists of necessary parts are maintained by the Operations department.

8.5 Maintenance

A log of all adjustment, malfunctions, and periods of non-operation of the CEMS will be maintained by the Operators and kept in the Operations office. Portions of the logbook are used in the generation of the quarterly reports, which may also be found in the Operations office at the facility.

The section lists the minimum of maintenance to be performed on a daily, monthly, quarterly, and annual basis for each analyzer and monitor.

9.1 Brimstone Analyzer Maintenance

9.1.1 Daily

1. Check the front panel for any alarms during the CD tests.
2. Check the aspirator for operation during the CD tests.
3. Check the zero/low CD.
4. Check the high CD.
5. Evaluate the CD levels and determine if additional action is warranted. Initiate action if necessary during the CD tests.

9.1.2 Weekly

1. Follow the manufacture's recommended weekly maintenance procedures. Details of these procedures are located in the plant's control room and offices.

9.1.3 Quarterly

1. An inspection of the connecting hardware should be made and worn pieces should be replaced as necessary.
2. A CGA must be performed except during the quarter when a RATA is performed.

9.1.4 Annually

1. A RATA must be performed during the quarter that a CGA is not being performed.

Once a system or component malfunction has been detected, prompt and effective corrective actions are necessary to minimize Analyzer downtime. Any time corrective actions performed on any CEMS component must be recorded.

No attempt is made in this section to repeat the corrective action/trouble-shooting procedures that are provided in the equipment manufacturer's manuals. Refer to those manuals for detailed procedures.

Appendix A Spare Parts List

Appendix B Permits

WDEQ Permit:

- Chapter 6, Section 3, Permit No. 31-045 (Issued February 19, 2003)

Appendix C Regulations

- 40 CFR 60, Subpart A – General Provisions
- 40 CFR 60, Subpart LLL – Standards of Performance for Onshore Natural Gas Processing: SO_2 Emissions
- 40 CFR 60, Appendix B – Performance Specifications
- 40 CFR 60, Appendix F – Quality Assurance Procedures

Appendix A

Critical Spare Parts for the Brimstone 942 Analyzer

BRM P/N	Description	Qty	CSA	UL
101.8001	Solenoid, 3-way NC, IS, 24VDC, CSA	1	LR-80115	none
105.0002	Window, Fused Silica, 1/2 x 1/4"	2	N/A	N/A
105.2002	UV Fiber, 0.4 mm Hi Temp, 51"	1	N/A	N/A
105.2003	UV Fiber, 0.6 mm Hi Temp, 27"	1	N/A	N/A
107.1000	O-Ring, 1/2 x 3/8 x 1/16, Silicone	5	N/A	N/A
107.1001	O-Ring, 3/4 x 7/8 x .739, Silicone	1	N/A	N/A
109.4001	UV-Deuterium Lamp	1	N/A	N/A
112.0000	Anti-Solarizer, 500 ml	1	N/A	N/A

A spare laptop computer is also kept on hand in the event that the Brimstone computer experiences a hard drive failure. IT personnel at the plant have a software installation CD to program the spare laptop for temporary replacement until a new computer is obtained from Brimstone.

Appendix B
Permits

WDEQ Permit:

- Chapter 6, Section 3, Permit No. 31-045 (Issued February 19, 2003)

Appendix C
Regulations

Federal Regulations:

- 40 CFR 60, Subpart A – General Provisions
- 40 CFR 60, Subpart LLL – Standards of Performance for Onshore Natural Gas Processing: SO_2 Emissions
- 40 CFR 60, Appendix B – Performance Specifications
- 40 CFR 60, Appendix F – Quality Assurance Procedures

Appendices B, C, D
Reserved

(Modified February 28, 2014)