AIR QUALITY DIVISION
CHAPTER 6, SECTION 3
OPERATING PERMIT

WYOMING DEPARTMENT OF ENVIRONMENTAL QUALITY
AIR QUALITY DIVISION
122 West 25th Street
Cheyenne, Wyoming 82002

PERMIT NO. 3-0-149-2

Issue Date: **July 28, 2006**
Expiration Date: **January 21, 2008**
Effective Date: **July 28, 2006**
Replaces Permit No.: **30-149-1**

In accordance with the provisions of W.S. §35-11-203 through W.S. §35-11-212 and Chapter 6, Section 3 of the Wyoming Air Quality Standards and Regulations,

Frontier Refining Inc.
Cheyenne Refinery
Section 4 and 5, T13N, R66W
Laramie County, Wyoming

is authorized to operate a stationary source of air contaminants consisting of emission units described in this permit. The units described are subject to the terms and conditions specified in this permit. All terms and conditions of the permit are enforceable by the State of Wyoming. All terms and conditions of the permit, except those designated as not federally enforceable, are enforceable by EPA and citizens under the Act. A copy of this permit shall be kept on-site at the above named facility.

David A. Finley, Administrator
Air Quality Division

Date 7/31/06

John V. Corra, Director
Department of Environmental Quality

Date 8/2/06

WAQSR CHAPTER 6, SECTION 3 OPERATING PERMIT

WYOMING DEPARTMENT OF ENVIRONMENTAL QUALITY
AIR QUALITY DIVISION

(Modified November 26, 2003) ***(Modified July 28, 2006)***

TABLE OF CONTENTS

General Information 3
Source Emission Points 4
Total Facility Estimated Emissions 6
Facility-Specific Permit Conditions 7
- Facility-Wide Permit Conditions 7
- Source-Specific Permit Conditions 7
- Testing Requirements *11*
- Monitoring Requirements *13*
- Recordkeeping Requirements *16*
- Reporting Requirements *18*
- Accidental Release Prevention Requirements *21*
- ***Sulfur Dioxide Emissions Inventory Requirements*** *22*
- Odor Control Requirements *23*

WAQSR Chapter 5, Section 2 and 40 CFR 60 Subpart J Requirements *25*
WAQSR Chapter 5, Section 2 and 40 CFR 60 Subpart GGG Requirements *27*
WAQSR Chapter 5, Section 2 and 40 CFR 60 Subpart QQQ Requirements *28*
WAQSR Chapter 5, Section 2 and 40 CFR 60 Subpart Db Requirements *29*
WAQSR Chapter 5, Section 2 and 40 CFR 60 Subpart Ka Requirements *31*
WAQSR Chapter 5, Section 2 and 40 CFR 60 Subpart Kb Requirements *32*
40 CFR 61 Subparts A and FF Requirements *33*
WAQSR Chapter 5, Section 3 and 40 CFR 63 Subpart CC Requirements *34*
WAQSR Chapter 5, Section 3 and 40 CFR 63 Subpart UUU Requirements *37*
WAQSR Chapter 5, Section 3 and 40 CFR 63 Subpart EEEE Requirements *40*
WAQSR Chapter 5, Section 3 and 40 CFR 63 Subpart ZZZZ Requirements *41*
WAQSR Chapter 5, Section 3 and 40 CFR 63 Subpart DDDDD Requirements *46*
Compliance Certification and Schedule *51*
- Compliance Certification *51*
- Compliance Schedule *53*

General Permit Conditions *54*
State Only Permit Conditions *59*
Summary of Source Emission Limits and Requirements *61*
Abbreviations *72*
Definitions *73*

Appendix A: 40 CFR 60 Subpart J
Appendix B: 40 CFR 60 Subparts GGG and VV
Appendix C: 40 CFR 60 Subpart QQQ
Appendix D: 40 CFR 60 Subpart Db
Appendix E: 40 CFR 60 Subpart Ka
Appendix F: 40 CFR 60 Subpart Kb
Appendix G: 40 CFR 63 Subpart CC
Appendix H: ***40 CFR 63 Subpart CC Equipment List (updated)***
Appendix I: 40 CFR 63 Subpart UUU
Appendix J: ***Sulfur Contingency Plan (updated)***
Appendix K: WAQSR Ch 5, Sec 2(m) and Ch 5, Sec 3(m) Flare Requirements
Appendix L: Cheyenne Refinery Storage Vessels
Appendix M: ***[Reserved]***
Appendix N: Fuel Meter Maintenance Plan Description
Appendix O: Portable Analyzer Monitoring Protocol
Appendix P: 40 CFR 63 Subpart EEEE
Appendix Q: 40 CFR 63 Subpart ZZZZ
Appendix R: 40 CFR 63 Subpart DDDDD
Appendix S: 40 CFR 61 Subparts A and FF

GENERAL INFORMATION

(Modified July 28, 2006)

Company Name: **Frontier Refining Inc.**

Mailing Address: **P.O. Box 1588**

City: **Cheyenne** State: **WY** Zip: **82003-1588**

Plant Name: **Cheyenne Refinery**

Plant Location: **2700 E. 5th Street, Cheyenne, WY 82007 (Section 4 and 5, Township 13 North, Range 66 West, Laramie County, Wyoming)**

Name of Owner: **Frontier** *Oil Corporation* Phone: **(303) 714-0100**

Responsible Officials: ***Kevin Burke*** Phone: **(307) 634-3551**
Gerry Faudel (alternate)
Wayne M. Kachel (alternate)
(amended July 23, 2009)

Plant Manager/Contact: ***Kevin Burke*** Phone: **(307) 634-3551**
(amended July 23, 2009)

DEQ Air Quality Contact: **District 1 Engineer** Phone: **(307) 777-7391**
122 W. 25th Street
Cheyenne, WY 82002

SIC Code: **2911**

Description of Process: **The Cheyenne Refinery is a petroleum refinery processing up to** *52,000* **barrels of sweet and sour crude oil per day into a variety of marketable products which can be used as liquid petroleum gas, gasoline, diesel fuel and fuel oil, asphalt, or petroleum coke. Refinery operations are carried out in the following process facilities: (1) crude distillation unit (atmospheric and vacuum), (2) delayed coker unit with gas recovery facilities, (3) fluidized catalytic cracking unit (FCCU) with gas concentration facilities, (4) naphtha hydrotreater unit (***Hydrobon***), (5) distillate hydrotreater unit (***Unifiner***), (6) catalytic reforming unit (***Platformer***), (7)** *Butamer* **unit (butane isomerization), (8) alkylation unit, (9) sulfur recovery facilities which includes the amine treater,** *two* **Claus sulfur recovery unit***s***, tail gas treatment (SCOT), and sulfur incinerator,** *and (10) gasoline desulfurization unit (Scanfiner).* **Additionally the refinery has ancillary facilities including a hydrogen plant, sour water stripper, wastewater treatment plant, three boilers providing utility steam, cooling towers,** *tank farms,* **loading and unloading facilities, and** *two* **flare system***s***.**

SOURCE EMISSION POINTS *(Modified November 26, 2003)* ***(Modified July 28, 2006)***

This table may not include any or all insignificant activities at this facility.

SOURCE ID#	SOURCE DESCRIPTION	SIZE MMBtu/hr *	WAQSR CH 6, SEC 2 PERMITS
10	Reformer Stab*ilizer* Reboiler	*12.0*	MD-674, ***MD-1115A***
11	Unifiner Charge Heater	14.3 ***(currently). After replacement unit is built: 20.0 MMBtu/hr during normal operations and approx. 42.0 MMBtu/hr during startup.***	MD-207, MD-674, ***MD-1115A***
12	Unifiner Reboiler	14.3/***24.0 after ultra low-NO_X burners are installed***	MD-207, MD-674, ***MD-1115A***
13	Hydrobon Charge Heater	30.3	CT-1052, MD-674, ***MD-1115A***
14	Reformer *Charge Heater*	***39.0***	MD-674, ***MD-1115A***
15	Reformer *#1 Interheater*	***32.0***	MD-674, ***MD-1115A***
16	Reformer *#2 Interheater*	*14.5*	MD-674, ***MD-1115A***
17	Reformer *#3 Interheater*	5.1	MD-674, ***MD-1115A***
18	Hydrobon Reboiler	***25.0***	MD-674, ***MD-1115A***
19	Gas Con Reboiler	20.8	MD-269
20	FCCU Charge Heater	18.8	MD-674
21	Crude Charge Heater	*202*	MD-179, MD-674, *MD-927A*
22	Crude Vacuum Charge Heater	*38*	MD-674, *MD-927A*
23	Coker A Heater	39.0	MD-179, MD-674, ***August 10, 2004 WAQSR Ch 6, Sec 2 (k) Waiver***
24	Coker B Heater	39.0	MD-179, MD-674
25	Alky Iso-Stripper Reboiler	33.1	MD-269, MD-674
26	Butamer Reboiler	15.0	MD-674
34a	CO Boiler	186.9	MD-279, MD-674
34b	FCCU Regenerator	NA	MD-188, MD-674
35	#2 Cutler Heater	2.1	MD-674
36	Tank 90 Heater	9.5	MD-674
37	Tank 91 Heater	9.5	MD-674
38	Tank 56 Heater	4.1	MD-674
39	Tank 59 Heater	4.1	MD-674
40	Tank 95 Heater	2.1	MD-674

SOURCE ID#	SOURCE DESCRIPTION	SIZE MMBtu/hr *	WAQSR CH 6, SEC 2 PERMITS
42	Sulfur Incinerator	NA	CT-84, MD-188, MD-798, ***MD-1176***
43	Plant #1 (Coker) Flare	NA	MD-254, April 14, 1998 MD-254 Amendment, MD-674, ***MD-1176***
44	Plant #2 (Main) Flare	NA	MD-188
45	Claus Hot Oil Heater (at SRU)	3.4	MD-674
46	Tank 93 & 94 Heater	2.1	MD-674
47	1232 HP Coker Compressor Engine (catalyst)	1232 hp	CT-961, MD-179, MD-674
48	1000 HP Coker Compressor Engine (catalyst)	1000 hp	MD-179, MD-674
49	Tank 50 Heater	5.3	MD-674
49a	Tank 52 Heater (Asphalt Heater #1)	6.0	MD-674, ***MD-1115A***
50	Hydrogen Plant Reformer Heater	61.7	MD-674
58	#1 Indeck Boiler (Nebraska Boiler)	177.6	CT-1050, MD-674
59	#2 Indeck Boiler (Nebraska Boiler)	177.6	CT-1050, MD-674
62	Truck Loading Rack (Light Oil Loading Dock or Gasoline Loading Dock Unit) Vapor Recovery Unit		MD-674, ***MD-1021,*** August 21, 2000 WAQSR Ch 6, Sec 2 (k) Waiver
63	Waste Water Treatment Plant (WWTP) American Petroleum Institute (API) Separator (500 gal/min)		MD-106
64	Tank Farm Unit	See Appendix L.	CT-84A2, Notice of Violation and Order: July 24, 1989 - Docket No. 2064-89
69	Scanfiner Reactor Preheat Furnace	8.0	MD-798
78	***Porter Draw Diesel Water Pump Engine (Caterpillar 3056 Diesel)***	***150 hp***	***October 14, 2003 WAQSR Ch 6, Sec 2(k) Waiver***
79	***Caterpillar 3406E diesel backup air compressor engine***	***525 hp***	***June 15, 2005 WAQSR Ch 6, Sec 2(k) Waiver***
None	CBM Pit at Alky Unit	NA	July 10, 1992 Consent Decree (Docket No. 130-371)
None	FCCU Waste Heat Exchanger	NA	June 4, 1996 waiver
None	Fire Training Facility	NA	April 25, 1997 Ch 6, Sec 2 (k) Waiver (Application N47)
None	Cooling Towers	NA	None
None	Temporary Outside Coke Stockpile	NA	April 14, 1998 Ch 6, Sec 2 (k) Waiver
None	Coke Crushing and Conveying Systems	NA	None

**** Capacity and firing rates listed in this table are based upon permit applications submitted by the permittee.***

TOTAL FACILITY ESTIMATED EMISSIONS

For informational purposes only. These emissions are not to be assumed as permit limits.

(Modified July 28, 2006)

POLLUTANT	EMISSIONS (TPY)
CRITERIA POLLUTANT EMISSIONS	
PM_{10} Particulate Matter	***342***
Sulfur Dioxide (SO_2)	***1533***
Nitrogen Oxides (NO_X)	***1019***
Carbon Monoxide (CO)	***651***
Volatile Organic Compounds (VOCs)	***870***
HAZARDOUS AIR POLLUTANT (HAP) EMISSIONS	***35***

Emission estimates are from the operating permit application.

FACILITY-SPECIFIC PERMIT CONDITIONS

Facility-Wide Permit Conditions

(F1) PERMIT SHIELD [WAQSR Ch 6, Sec 3 (k)]
Compliance with the conditions of this permit shall be deemed compliance with any applicable requirements as of the date of permit issuance.

Source-Specific Permit Conditions

(F2) FUGITIVE PETROLEUM COKE EMISSIONS CONTROL [WAQSR Ch 6, Sec 2 (k) April 14, 1998 Waiver]

(a) The petroleum coke pile shall be treated with water and/or chemical dust suppressant to the extent necessary to limit the fugitive emissions to a maximum opacity of no greater than 20 percent as determined by 40 CFR 60 Method 9.

(b) The permittee shall only store petroleum coke outside when rail cars are not available for offsite transport.

(F3) VISIBLE EMISSIONS [WAQSR Ch 3, Sec 2] ***(Modified July 28, 2006)***

(a) **Unless a different limit is specified elsewhere in this permit,** visible emissions of any contaminant discharged into the atmosphere from any single emission source, shall not exhibit greater than 20 percent opacity except for one period or periods aggregating not more than six minutes in any one hour of not more than 40 percent opacity.

(b) Visible emissions from units listed in Table I of this permit shall not exceed the specified limits.

(c) Visible emissions from the Caterpillar 3056 Porter Draw Diesel Water Pump Engine (unit 78) and the Caterpillar 3406E DITA diesel backup air compressor engine (unit 79) shall be limited to 30 percent opacity except for periods not exceeding 10 seconds. This limitation shall not apply during a reasonable period of warmup following a cold start or where undergoing repairs and adjustment following malfunction.

(F4) FUEL RESTRICTIONS [WAQSR Ch 6, Sec 2 Permit MD-674 **and** ***WAQSR Ch 6, Sec 2(k) October 14, 2003 and June 15, 2005 Waivers*] *(Modified July 28, 2006)***

(a) Except for the Caterpillar 3056 Porter Draw Diesel Water Pump Engine (unit 78) and the Caterpillar 3406E DITA diesel backup air compressor engine (unit 79), fuel fired emission units at the refinery shall only be fired with refinery fuel gas or pipeline quality natural gas.

(b) Units may fire with fuels other than refinery fuel gas or pipeline quality natural gas upon receipt of a construction or modification permit issued under Chapter 6, Section 2 of WAQSR that authorizes such change. The permittee must, however, submit an application to modify this operating permit within 12 months of commencement of the change authorized by the Chapter 6, Section 2 permit.

(F5) SO_2 EMISSIONS *(Modified November 26, 2003)* ***(Modified July 28, 2006)***
[WAQSR Ch 6, Sec 2 Permits MD-269, MD-254, MD-798, *MD-927A, MD-1115A, and MD-1176*]

(a) SO_2 emissions from the units listed in Table I shall not exceed the specified limits.

(b) SO_2 emissions from the sulfur incinerator (unit 42) shall be limited to 250 parts per million (by volume, dry at zero percent excess air, 12-hour average), 18.*6* lb/hr, and *35.0* TPY.

(c) ***The Coker Flare shall comply with all applicable requirements of WAQSR Chapter 5, Section 2 and 40 CFR 60 Subpart J.***

(d) The H_2S content of the fuel gas fired in any unit shall not exceed 0.1 gr/dscf ***(163 ppm$_v$) on a*** rolling 3-hour average ***and 60 ppm on a calendar year average.***

(e) SO_2 emissions from the Unifiner Charge Heater (unit 11) shall be limited to the second values in Table I after the replacement Unifiner Charge Heater authorized by permit MD-1115A is built.

(f) SO_2 emissions from the Unifiner Reboiler (unit 12) shall be limited to the second values in Table I after the increase in firing rate and installation of ultra low NO_X burners authorized by permit MD-1115A.

TABLE I: SO_2 and Visible Emission Limits *(Modified November 26, 2003)**(Modified July 28, 2006)***				
ID	Source Description	Allowables		
		SO_2		Opacity
		lb/hr	TPY	Percent
10	Reformer Stab***ilizer*** Reboiler	***0.3***	***0.6***	
11	***Unifiner Charge Heater (start up conditions)***	***- / 1.1***[b]		
11	Unifiner Charge Heater ***(normal operation)***	0.3 / ***0.5***[b]	1.5 / ***1.0***[b]	
12	Unifiner Reboiler	0.3 / ***0.6***[b]	1.5 / ***1.2***[b]	
13	Hydrobon Charge Heater	0.7	***1.5***	
14	Reformer ***Charge Heater***	***0.9***	***2.0***	
15	Reformer ***#1 Interheater***	***0.8***	***1.6***	
16	Reformer ***#2 Interheater***	***0.3***	***0.7***	
17	Reformer ***#3 Interheater***	0.1	***0.3***	40
18	Hydrobon Reboiler	***0.6***	***1.3***	
19	Gas Con Reboiler	0.5	2.1	40
20	FCCU Charge	0.4	1.9	
21	Crude Charge Heater	*4.7*	*20.5*	
22	Crude Vacuum Charge Htr.	*0.9*	*3.9*	
23	Coker A Heater	0.9	4.0	
24	Coker B Heater	0.9	4.0	
25	Alky Iso-Stripper Reboiler	0.8	3.4	
26	Butamer Reboiler	0.3	1.5	
34a	CO Boiler	4.3	19.0	40
34b	FCCU Regenerator	320.0	1401.6	40
35	#2 Cutler Heater		0.2	40
36	Tank 90 Heater	0.2	1.0	
37	Tank 91 Heater	0.2	1.0	
38	Tank 56 Heater	0.1	0.4	40
39	Tank 59 Heater	0.1	0.4	40
40	Tank 95 Heater		0.2	40
42	Sulfur Incinerator	18.***6***	***35.0***	
43	Plant #1 (Coker) Flare			0[a]
44	The Plant #2 (Main) Flare			0[a]
45	Claus Hot Oil Heater	0.1	0.3	
46	Tank 93 and 94 Heater		0.2	40
47	1232 HP Coker Engine	0.3	1.1	
48	1000 HP Coker Engine	0.2	0.9	
49	Tank 50 Heater	0.1	0.5	40
49a	Tank 51 Heater (Asphalt Heater #1)	0.1	0.6	
50	H_2 Plant Reformer Heater	1.4	***3.1***	
58	#1 Indeck Boiler	4.1	18.0	
59	#2 Indeck Boiler	4.1	18.0	
69	Scanfiner Reactor Preheat Furnace			

[a] The Plant #1 Flare (unit 43) and Plant #2 Flare (unit 44) shall each be operated with no visible emissions as determined by 40 CFR 60, Appendix A, Method 22, except for periods not to exceed a total of five minutes during any two consecutive hours.

[b] ***See conditions F5 (e) and (f).***

(F6) PARTICULATE EMISSIONS [WAQSR Ch 6, Sec 2 Permit MD-674]
Particulate matter emissions from the FCCU Regenerator (unit 34b) shall not exceed 70.8 lb/hr and 310.0 TPY.

(F7) NO_x EMISSIONS [WAQSR Ch 6, Sec 2 Permits MD-674, *MD-927A,* ***and MD-1115A; and Ch 6, Sec 2 (k) August 10, 2004 Waiver***] *(Modified November 26, 2003)* ***(Modified July 28, 2006)***

(a) NO_X emissions from the units listed in Table II of this permit shall not exceed the specified limits.

(b) NO_X emissions from each coker compressor engine (units 47 and 48) shall be limited to 1.5 g/hp-hr.

(c) NO_X emissions from the Unifiner Charge Heater (unit 11) shall be limited to the second values in Table II after the replacement Unifiner Charge Heater authorized by permit MD-1115A is built.

(d) NO_X emissions from the Unifiner Reboiler (unit 12) shall be limited to the second values in Table II after the increase in firing rate and installation of ultra low-NO_X burners authorized by permit MD-1115A.

(F8) CO EMISSIONS *(Modified November 26, 2003)* ***(Modified July 28, 2006)***
[WAQSR Ch 6, Sec 2 Permits MD-674 *and MD-927A* ***and Ch 6, Sec 2 (k) August 10, 2004 Waiver***]

(a) CO emissions from the units listed in Table II of this permit shall not exceed the specified limits.

(b) CO emissions from each coker compressor engine (units 47 and 48) shall be limited to 2.5 g/hp-hr.

TABLE II: NO_X and CO Emission Limits *(Modified November 26, 2003)* ***(Modified July 28, 2006)***

ID	Source Description	Allowables					
		NO_X			CO		
		lb/MMBtu	lb/hr	TPY	lb/MMBtu	lb/hr	TPY
10	Reformer Stab*ilizer* Reboiler	***0.035***	***0.4***	***1.8***			
11	***Unifiner Charge Heater (start up conditions)***	***-*** ***0.030[b]***	***-*** ***1.3[b]***				
11	Unifiner Charge Heater ***(normal operation)***	0.13 ***-[b]***	1.9 ***0.6[b]***	8.1 ***2.6[b]***			
12	Unifiner Reboiler	0.13 ***0.035[b]***	1.9 ***0.8[b]***	8.1 ***3.7[b]***			
13	Hydrobon Charge Heater	0.13	3.9	17.3			
14	Reformer ***Charge Heater***	***0.035***	***1.4***	***6.0***			
15	Reformer ***#1 Interheater***	***0.035***	***1.1***	***4.9***			
16	Reformer ***#2 Interheater***	***0.035***	***0.5***	***2.2***			
17	Reformer ***#3 Interheater***	0.23	1.2	5.1			
18	Hydrobon Reboiler	***0.035***	***0.9***	***3.8***			
19	Gas Con Reboiler	0.23	4.8	20.9			
20	FCCU Charge	0.23	4.3	18.9			
21	Crude Charge Heater	*0.031*	*6.3*	*27.4*	*0.04*	*8.1*	*35.4*
22	Crude Vacuum Charge Htr.		*1.1*	*5.0*			
23	Coker A Heater	***0.045***	***1.9***	***8.4***	***0.04***	***1.6***	***7.1***
24	Coker B Heater	0.13	5.1	22.2			
25	Alky Iso-Stripper Reboiler	0.23	7.6	33.3			
26	Butamer Reboiler	0.23	3.5	15.1			
34a	CO Boiler	0.23	43.0	188.3	0.16	29.9	131.0
34b	FCCU Regenerator		53.0	232.1		30.0	131.4
35	#2 Cutler Heater	0.23	0.5	2.1			
36	Tank 90 Heater	0.23	2.2	9.6			
37	Tank 91 Heater	0.23	2.2	9.6			
38	Tank 56 Heater	0.23	0.9	4.1			
39	Tank 59 Heater	0.23	0.9	4.1			
40	Tank 95 Heater	0.23	0.5	2.1			

TABLE II: NO_X and CO Emission Limits *(Modified November 26, 2003)* ***(Modified July 28, 2006)***							
ID	Source Description	Allowables					
		NO_X			CO		
		lb/MMBtu	lb/hr	TPY	lb/MMBtu	lb/hr	TPY
42	Sulfur Incinerator		2.4	10.6			
43	Plant #1 (Coker) Flare						
44	The Plant #2 (Main) Flare						
45	Claus Hot Oil Heater (SRU)	0.13	0.4	1.9			
46	Tank 93 and 94 Heater	0.23	0.5	2.1			
47	1232 HP Coker Engine		4.1	17.8		6.8	29.7
48	1000 HP Coker Engine		3.3	14.5		5.5	24.1
49	Tank 50 Heater	0.23	1.2	5.4			
49a	Tank 52 (Asphalt Heater #1)	0.20	1.2	5.3			
50	H_2 Plant Reformer Heater	0.13	8.0	35.1			
58	#1 Indeck Boiler	0.10[a]	17.8	77.8	0.04	7.1	31.1
59	#2 Indeck Boiler	0.10[a]	17.8	77.8	0.04	7.1	31.1
69	Scanfiner Reactor Preheat Furnace	0.035	0.28	1.2			

[a] Calculated as a 30-day rolling average as specified in 40 CFR Part 60, Subpart Db, §60.46b (e).

[b] ***See conditions F7 (c) and (d).***

(F9) OPERATION AND MAINTENANCE ***(Modified July 28, 2006)***

[WAQSR Ch 6, Sec 2 Permits MD-106, MD-179, MD-188, ***and MD-1176; Ch 6, Sec 2 (k) June 15, 2005 and October 14, 2003 Waivers;*** 40 CFR 63 Subpart CC; and W.S. 35-11-110 (June 4, 1996 Division Letter)]

(a) The permittee shall operate in accordance with the contingency plan for the operation of the refinery during any time period when the sulfur recovery plant(s) is not operational. Such operation shall minimize emissions of SO_2 from the Plant #2 (Main) Flare (unit 44) to the extent possible. This plan is attached as Appendix J of this permit.

(b) The permittee shall operate the refinery wastewater system in accordance with the following conditions:

(i) Any access doors or other openings of the Waste Water Treatment Plant (WWTP) API separator tank, shall be gasketed, latched and kept closed at all times during operation of the separator, except during inspections and maintenance.

(ii) The roof, access doors, and openings of the separator tank, shall be designed and operated with no detectable emissions, as indicated by an instrument reading of less than 500 parts per million above background, using 40 CFR 60, Appendix A, Method 21.

(iii) When a broken seal or gasket is identified which results or may result in detectable emissions, first efforts at repair shall be made as soon as is practical, but not later than 15 calendar days after it is identified except when the repairs are technically impossible without a complete or partial refinery or process unit shutdown.

(c) The permittee is authorized to conduct cleaning on the FCCU Waste Heat Exchanger as part of the scheduled maintenance program. The cleaning events shall be considered part of the normal operations and shall be limited to one 20-pound injection of spent catalyst material per day.

(d) The permittee shall meet all flare requirements of WAQSR Chapter 5, Section 2 (m) for the Plant #1 Flare (unit 43) and Plant #2 Flare (unit 44). Chapter 5, Section 2 (m) flare requirements are included in Appendix K of this permit.

(e) (i) The Caterpillar 3056 Porter Draw Diesel Water Pump Engine (unit 78) shall be limited to 4000 hours of operation per calendar year.

(ii) The Caterpillar 3406E DITA diesel backup air compressor engine (unit 79) shall be limited to 2160 hours of operation per calendar year.

(f) The Caterpillar 3056 Porter Draw Diesel Water Pump Engine and the Caterpillar 3406E DITA diesel backup air compressor engine shall be maintained in accordance with the manufacturer's recommendations.

(F10) MAJOR EQUIPMENT PROCESS RATES ***(Modified July 28, 2006)***
[WAQSR Ch 6, Sec 2 Permits CT-84A2, MD-207, MD-254A, MD-674, ***and MD-1176***]

(a) The feed to the FCCU shall not exceed 12,000 bbl/day.

(b) The crude charge rate to the Crude Unit shall not exceed *52*,000 barrels per day based upon a 12-month rolling average. The permittee shall ***determine compliance with this rate as follows: Calculate the daily average crude charge rate for the month by dividing the total raw crude charge for that month by the number of calendar days in that month. This daily average crude charge rate for the month shall be added to the rates of the previous 11 months to calculate the new 12-month rolling average rate.***

(c) The charge rate to the distillate hydrotreater shall not exceed 21,000 barrels per day (bbl/day) as a calendar month average.

(d) The daily coker charge rate shall not exceed 10,000 barrels per day (bbl/day) as a calendar month average.

(e) The combined sulfur input to SRU#1 and SRU#2 shall be limited to 100 ltpd (long tons per day).

(F11) VRU EMISSIONS (Modified July 28, 2006) [WAQSR Ch 6, Sec 2 Permit MD-1021]
Total VOC emissions from the Truck Loading Dock VRU control system (unit 62) for gasoline and non-gasoline loading shall be limited to 5.5 TPY.

(F12) CONSTRUCTION (Modified July 28, 2006) [WAQSR Ch 6, Sec 2 Permit MD-1115A]

(a) For the equipment permitted under Permit MD-1115A:

(i) Authorization to construct or modify under permit MD-1115A and the June 15, 2005 Waiver AP-3449 shall become invalid if construction is discontinued for a period of 24 months or more.

(ii) The Administrator may extend such time period(s) upon a satisfactory showing that an extension is justified.

(b) The permittee shall submit to the Division in accordance with condition G4 of this permit:

(i) For the Unifiner Charge Heater (unit 11) retrofit and Unifiner Reboiler (unit 12) replacement, the anticipated date of initial startup not more than 60 days or less than 30 days prior to such date, and

(ii) For the Unifiner Charge Heater, Unifiner Reboiler, (units 11 and 12) the actual date of initial startup within 15 days after such date.

Testing Requirements

(F13) ***[Reserved] (Modified July 28, 2006)***

(F14) PARTICULATE MATTER EMISSIONS TESTING [WAQSR Ch 6, Sec 3 (h)(i)(C)(I)]

(a) The permittee shall test the FCCU Regenerator (unit 34b) at least annually to assess compliance with the particulate emission limits in condition F6 of this permit. Methods 1- 5 shall be used to measure particulate matter emissions.

(b) Testing shall be conducted in accordance with WAQSR Chapter 5, Section 2 (h).

(F15) NO_x EMISSIONS TESTING *(Modified November 26, 2003)* ***(Modified July 28, 2006)***
[WAQSR Ch 6, Sec 2 Permits MD-674, *MD-927A,* ***and MD-1115A;*** and Ch 6, Sec 3 (h)(i)(C)(I)]

(a) The permittee shall test the 1232 HP and 1000 HP coker compressor engines (units 47 and 48) quarterly at minimum to assess compliance with the NO_X emission limits in condition F7 of this permit.

(b) The permittee shall test the CO Boiler (unit 34a), *and the Crude Charge Heater (unit 21)* annually at minimum to assess compliance with the NO_X emission limits in condition F7 of this permit.

(c) The permittee shall test the Reformer ***Charge Heater*** (unit 14), Alky Iso-Stripper Reboiler (unit 25), and Hydrogen Plant Reformer Heater (unit 50) at least once during the permit term to assess compliance with the NO_X emission limits in condition F7 of this permit.

(d) Initial performance tests shall be conducted on the Crude Unit Heater and Crude Vacuum Charge Heater (units 21 and 22) to determine compliance with NO_X emission limits ***by February 24, 2004.*** *The permittee shall conduct three-one hour tests for each heater, unless otherwise determined by the Division. Alternatively, the permittee may submit previous test results as described in condition F39(c) of this permit.*

(e) ***Initial performance tests shall be conducted on the Unifiner Charge Heater (unit 11) and Unifiner Reboiler (unit 12) to determine compliance with NO_X emission limits (lb/MMBtu and lb/hr).***

(i) Testing shall be conducted within 30 days of achieving maximum design rate but not later than 90 days following initial startup. If maximum design production rate is not achieved within 90 days of startup, the Administrator may require testing at the rate achieved and again when the maximum rate is achieved.

(ii) Protocols shall be submitted to the Division at least fifteen (15) days prior to testing, and results shall be submitted to the Division within 30 days of test completion for each unit.

(iii) The permittee shall conduct three-one hour tests following EPA Reference Methods for each heater, unless otherwise determined by the Division.

(f) Methods 1-4 and 7E shall be used to measure NO_X emissions. Alternatively, for the testing required under F15(a), (b), and (c) the permittee may measure NO_X emissions using the Division's portable analyzer monitoring protocol. The portable analyzer monitoring protocol is attached as Appendix O of this permit.

(g) Testing shall be conducted in accordance with WAQSR Chapter 5, Section 2 (h).

(F16) CO EMISSIONS TESTING *(Modified November 26, 2003)* ***(Modified July 28, 2006)***
[WAQSR Ch 6, Sec 2 Permits MD-674, *MD-927A*, ***and MD-1115A*** and Ch 6, Sec 3 (h)(i)(C)(I)]

(a) The permittee shall test the 1232 HP and 1000 HP coker compressor engines (units 47 and 48) quarterly, at a minimum, to assess compliance with the CO emission limits in condition F8 of this permit.

(b) The permittee shall test the CO Boiler (unit 34a) at least once during the permit term to assess compliance with the CO emission limits in condition F8 of this permit.

(c) *The permittee shall test the Crude Charge Heater (unit 21) annually at minimum to assess compliance with the CO emission limits in condition F8 of this permit.*

(d) Initial performance tests shall be conducted on the Crude Unit Heater and Crude Vacuum Charge Heater (units 21 and 22) to determine compliance with CO emission limits within *90 days of permit issuance. The permittee shall conduct three-one hour tests for each heater, unless otherwise determined by the Division. Alternatively, the permittee may submit previous test results as described in condition F39(c) of this permit.*

(e) Initial performance tests shall be conducted on the Unifiner Charge Heater (unit 11) and Unifiner Reboiler (unit 12) to determine compliance with CO emission representations (lb/MMBtu and lb/hr) in the permit application.

(i) Testing shall be conducted within 30 days of achieving maximum design rate but not later than 90 days following initial startup. If maximum design production rate is not achieved within 90 days of startup, the Administrator may require testing at the rate achieved and again when the maximum rate is achieved.

(ii) Protocols shall be submitted to the Division at least fifteen (15) days prior to testing, and results shall be submitted to the Division within 30 days of test completion for each unit.

(iii) The permittee shall conduct three-one hour tests following EPA Reference Methods for each heater, unless otherwise determined by the Division.

(f) Methods 1-4 and 10 shall be used to measure CO emissions. Alternatively, for the testing required under F16 (a), (b), *and (c)* the permittee may measure CO emissions using the Division's portable analyzer monitoring protocol. The portable analyzer monitoring protocol is attached as Appendix O of this permit.

(g) Testing shall be conducted in accordance with WAQSR Chapter 5, Section 2 (h).

(F17) ADDITIONAL TESTING [W.S. 35-11-110]

(a) The Division reserves the right to require additional testing as provided under condition G1 of this permit. Should testing be required,

(i) Methods 1-5 shall be used to measure particulate emissions,

(ii) Methods 1-4 and 6 shall be used to measure SO_2 emissions,

(iii) Methods 1-4 and 7 or 7E shall be used to measure NO_X emissions,

(iv) Method 9 shall be used to measure visible emissions from sources other than the Plant #1 and Plant #2 Flares (units 43 and 44),

(v) Methods 1-4 and 10 shall be used to measure CO emissions, and

(vi) Method 22 shall be used to measure visible emissions from the Plant #1 and Plant #2 Flares (units 43 and 44).

(vii) For other pollutants, methods approved by the Administrator shall be used to measure emissions.

(b) Unless specified otherwise, testing shall be conducted in accordance with WAQSR Chapter 5, Section 2 (h).

Monitoring Requirements

(F18) OUTSIDE PETROLEUM COKE STORAGE PILE MONITORING
[WAQSR Ch 6, Sec 2 (k) 4/14/98 Waiver]
The permittee shall measure or estimate the amount of coke added, the amount of coke removed and the total amount of coke stored in the outside storage pile on a daily basis, whenever petroleum coke is stored outside the covered storage area.

(F19) VISIBLE EMISSIONS MONITORING ***(Modified July 28, 2006)***
[WAQSR Ch 6, Sec 3 (h)(i)(C)(I); ***February 14, 2005 Consent Decree (Civil No. 165-358)***]

(a) ***Periodic monitoring for opacity from the FCCU Regenerator (unit 34b) shall consist of the continuous opacity monitoring system (COMS) required under condition P63-UUU1.***

(b) The permittee shall conduct, at minimum, quarterly Method 9 observations of the Sulfur Incinerator (unit 42) to measure the opacity of visible emissions. Compliance with opacity limits shall be determined by a qualified observer certified in accordance with Section 3.1 of Method 9 and shall follow the requirements and procedures of Method 9.

(c) ***The permittee shall conduct, at minimum, semiannual Method 9 observations of the Porter Draw Diesel Water Pump Engine (unit 78) and the Caterpillar 3406E diesel backup air compressor engine (unit 79) to measure the opacity of visible emissions.***

(i) Compliance with opacity limits shall be determined by a qualified observer certified in accordance with Section 3.1 of Method 9 and shall follow the requirements and procedures of Method 9.

(ii) Observations are not required during any calendar semiannual period during which the engines are not operated.

(*d*) In lieu of periodic monitoring for visible emissions from the ***other*** fuel fired sources the permittee shall monitor the type of fuel used to ensure gas is the sole fuel source for these units.

(*e*) The permittee shall perform, at minimum, monthly Method 22 tests of the Plant #1 Flare (unit 43) and Plant #2 Flare (unit 44). The Method 22 tests shall be performed for a period of 15 consecutive minutes. If any visible emissions are observed during the 15 minute period, the test shall continue for two consecutive hours. The pilot on each flare shall be monitored for the presence of a flame. ***The ultraviolet (UV) pilot monitoring system on the Plant #1 Flare (unit 43) shall act as a backup to the thermocouples for this purpose.***

(F20) FUEL USAGE MONITORING
[WAQSR Ch 6, Sec 2 Permits CT-1050 and MD-269 and Ch 6, Sec 3 (h)(i)(C)(I)]

(a) The permittee shall monitor the gas consumption at each of the Indeck boilers (units 58 and 59).

(b) The permittee shall continue to operate and maintain fuel gas meters to monitor fuel usage for the Gas Con Reboiler (unit 19), Alky Reboiler (unit 25). The fuel gas meter maintenance plan is attached as Appendix N to this permit.

(F21) SO_2 EMISSIONS AND FLARE MONITORING ***(Modified July 28, 2006)***
[WAQSR Ch 6, Sec 2 Permits CT-84, CT-84A2, MD-188, ***and MD-1115A***]

(a) ***The permittee shall demonstrate continuous compliance with the Sulfur Incinerator (unit 42) SO_2 emission limits in condition F5 of this permit by conducting the following monitoring:***

(i) The permittee shall install, calibrate, operate, and maintain a CEM system for measuring SO_2 emissions discharged to the atmosphere in units of ppm_v and lb/hr. The CEM system shall comply with 40 CFR 60 Subpart J, Standards of Performance for Petroleum Refineries and consist of the following:

(A) A continuous SO_2 monitor located in the TGTU Sulfur Incinerator stack.

(B) An in-stack monitor for measuring oxygen content of the flue gas, at the location SO_2 emissions are monitored.

(C) A continuous flow monitoring system for measuring the flow of exhaust gases discharged into the atmosphere.

(ii) The CEM system listed in this condition shall comply with the monitoring requirements of WAQSR, Chapter 5, Section 2(j) including the following:

(A) 40 CFR 60, Appendix B, Performance Specification 2 for SO_2 and Performance Specification 3 for O_2. The monitoring systems must demonstrate linearity in accordance with Division requirements and be certified in both concentration (ppm_v) and units of lb/hr.

(B) Quality Assurance requirements of 40 CFR 60, Appendix F.

(C) Frontier Refining Inc. shall develop and submit for the Division's approval a Quality Assurance plan for the monitoring systems in this condition.

(iii) Compliance with the limits set forth in condition F5 (b) shall be determined with data from the CEM system as follows:

(A) SO_2 emissions for each calendar month shall be calculated as the average of all hourly data for the month times the number of TGTU Sulfur Incinerator operating hours for the month. All 1-hour averages meeting the requirements of WAQSR, Chapter 5, Section 2(j) shall be included in the average.

(B) Annual SO_2 emissions shall be calculated as the sum of calendar month SO_2 emissions during the calendar year.

(b) The permittee shall continue to operate and maintain the certified H_2S monitor for the refinery fuel gas system to assess compliance with the allowable fuel gas concentration set in condition F5 (d) of this permit. The monitoring system shall comply with 40 CFR 60 Subpart J. ***The average fuel gas H_2S concentration for each calendar month shall be calculated by summing the 1-hour averages from the fuel gas H_2S monitor and dividing by the number of hours in the month for which there is monitoring data. Data (and associated monitoring data hours) which do not meet the requirements of WAQSR, Chapter 5, Section 2(j) shall not be included in the averages. The calendar year average shall be calculated by averaging the monthly values.***

(c) The permittee shall continue to operate and maintain the certified continuous SO_2 and NO_X emission monitoring systems on the Fluidized Catalytic Cracking Unit (FCCU) Regenerator stack to determine compliance with allowable emission rates set in conditions F5 and F7 of this permit. The monitoring system shall comply with 40 CFR 60 Appendix B, Performance Specification 2 (SO_2 and NO_X). In addition, the monitoring will comply with the following requirements:

(i) The system will provide for zero (low-level value between 0 - 20 percent of span value) and span (50 to 100 percent of span value) calibration drifts at least once daily in accordance with a written procedure. The zero and span shall, as a minimum, be adjusted whenever the 24-hour zero drift or 24-hour span drift exceeds two times the limits of the applicable performance specifications in 40 CFR 60 Appendix B. The system must allow the amount of excess zero and span drift measured at the 24-hour interval checks to be recorded and quantified, whenever specified.

(ii) Except for system breakdown, repairs, calibration checks, and zero and span adjustments required under subpart (c)(i) of this condition, the monitoring systems shall be in continuous operation and shall complete a minimum of one cycle of operation (sampling, analyzing, and data recording) for each successive 15 minute period.

(iii) The monitoring system(s) shall incorporate measurements capable of calculating the SO_2 and NO_X emission rates in units of the allowable emission rate (lb/hr).

(iv) In addition to the requirements of Performance Specification 2, the system must demonstrate linearity in accordance with Division requirements and be certified in both concentration (ppm) and units of the standard (lb/hr).

(v) The quality assurance requirements for the monitoring system(s) will follow 40 CFR 60 Appendix F. Data accuracy assessment for the purpose of maintenance and operation of the monitoring system(s) shall consist of one (1) cylinder gas audit per calendar quarter for three quarters of each operating year and one (1) relative accuracy test audit per operating year.

(d) Periodic monitoring for SO_2 emissions from the Plant #1 (Coker) Flare (unit 43) ***consists of the recordkeeping required by condition P60-J2 of this permit.***

(e) Periodic monitoring for SO_2 emissions from the #1 and #2 Indeck Boilers (units 58 and 59) shall consist of the continuous fuel gas H_2S concentration monitoring required under paragraph (b) of this condition and the fuel gas consumption monitored under F20.

(f) Periodic monitoring for SO_2 emissions from all other units listed in Table I of this permit with specified SO_2 emission limits shall consist of the continuous fuel gas H_2S concentration monitoring required under paragraph (a) of this condition while operating at or below the rates shown in the Source Emission Points Table.

(F22) PARTICULATE EMISSIONS MONITORING [WAQSR Ch 6, Sec 3 (h)(i)(C)(I)]
Periodic monitoring for particulate matter emissions from the FCCU Regenerator (unit 34b) shall consist of the testing required under condition F14 of this permit.

(F23) NO_x EMISSIONS MONITORING *(Modified November 26, 2003)* ***(Modified and amended July 28, 2006)***
[WAQSR Ch 6, Sec 2 Permits MD-188, CT-1050 *and MD-927A*, and Ch 6, Sec 3 (h)(i)(C)(I)]

(a) The permittee shall calibrate, operate, and maintain continuous emissions monitoring systems, to measure NO_x emissions from the #1 and #2 Indeck Boilers (units 58 and 59), in accordance with WAQSR Chapter 5, Section 2 (j) and 40 CFR 60 Appendix B, Specification 2. Annually, during the relative accuracy test audit, the permittee shall conduct performance tests to determine the NO_x emission rate in terms of lb/hr from the boilers to verify compliance with the limit specified in F7.

(b) Periodic monitoring for NO_x emissions from the Reformer ***Charge Heater*** (unit 14), Alky Iso-Stripper Reboiler (unit 25), CO Boiler (unit 34a), 1232 hp and 1000 hp compressor engines (units 47 and 48), Hydrogen Plant Reformer Heater (unit 50), *and Crude Charge Heater (unit 21)* shall consist of the testing required under condition F15 of this permit.

(c) Periodic monitoring for NO_x emissions from the FCCU Regenerator (unit 34b) shall consist of the continuous emissions monitoring described in condition F21(c) of this permit.

(d) NO_x emissions monitoring for units 10, 11, 12, 13, 15, 16, 17, 18, 19, 20, 23, 24, 26, 36, 37, 42, 49, and 49a shall consist of operating and maintaining the units in accordance with the manufacturer's recommendations ***or if unavailable, good maintenance practice,*** so NO_x emissions are minimized.

(e) Periodic monitoring of NO_x emissions from the other units listed in Table II of this permit (units 22, 35, 38, 39, 40, 45, 46, and 69) is not required since NO_x emissions from these sources are of trivial environmental importance.

(F24) CO EMISSIONS MONITORING *(Modified November 26, 2003)* ***(Modified July 28, 2006)***
[WAQSR *Ch 6, Sec 2 Permit MD-927A, and* Ch 6, Sec 3 (h)(i)(C)(I)]

(a) Periodic monitoring for CO emissions from the CO Boiler (unit 34a), the 1232 hp and 1000 hp compressor engines (units 47 and 48), *and Crude Charge Heater (unit 21)* shall consist of the testing required under condition F16 of this permit.

(b) ***Periodic monitoring for CO emissions from the Fluidized Catalytic Cracking Unit (unit F34b) consists of the continuous monitoring systems required by condition P60-UUU1 of this permit.***

(c) Periodic monitoring of CO emissions from the other units listed in Table II of this permit is not required since CO emissions from these sources are of trivial environmental importance.

(F25) PROCESS RATE MONITORING [WAQSR Ch 6, Sec 3 (h)(i)(C)(I)]
The permittee shall monitor process rates limited in condition F10 to ensure the specified limits are not exceeded.

(F26) OPERATION AND MAINTENANCE (***Modified July 28, 2006)***
[WAQSR Ch 6, Sec 2 Permit MD-106 and Ch 6, Sec 3 (h)(i)(C)(I)]]

(a) Inspections of the roof, access doors and openings of the WWTP API separator tank utilizing Method 21 shall be conducted semiannually to assess compliance with condition F9 of this permit.

(b) The permittee shall monitor the date, time, and duration of all cleaning events, and the amount of injected material used during each cleaning event conducted on the FCCU Waste Heat Exchanger to assess compliance with condition F9 (c).

(c) The permittee shall monitor the hours of operation of the Porter Draw Diesel Water Pump Engine and the Caterpillar 3406E DITA diesel backup air compressor engine to assess compliance with condition F9 (e) of this permit.

(F27) VRU EMISSIONS MONITORING [WAQSR Ch 6, Sec 2 Permit MD-1021] (Modified July 28, 2006)

(a) Periodic monitoring for VOC from the Truck Loading Rack (unit 62) shall consist of monitoring specified in 40 CFR 63, Subpart CC and condition P63-CC1.

(b) Annual emissions shall be calculated using the average monitored concentration and the total volume of gasoline and non-gasoline products loaded.

(F28) AMBIENT SO_2 & METEOROLOGICAL MONITORING [WAQSR Ch 6, Sec 2 Permits CT-84 and MD-254]

(a) The permittee shall continue to operate, in accordance with the requirements of 40 CFR Parts 50 and 58, an ambient air SO_2 monitoring system acceptable to the Division.

(b) The permittee shall continue to operate and maintain a meteorological station approved by the Division.

Recordkeeping Requirements

(F29) FUGITIVE PETROLEUM COKE EMISSIONS CONTROL RECORDS
[WAQSR Ch 6, Sec 2 Waiver 4/14/98 and Ch 6, Sec 3 (h)(i)(C)(II)]

(a) The permittee shall maintain records of water usage and chemical dust suppressant usage on the outside petroleum coke storage pile such that compliance with condition F2 of this permit can be assessed.

(b) The permittee shall keep daily records of the amount of coke added to the outside storage pile, the amount of coke removed, and the total amount of coke stored, whenever petroleum coke is stored outside the covered storage area.

(c) If coke is stored outside for more than sixty (60) consecutive days, the permittee shall keep records of its effort to increase the rate at which coke is shipped off site.

(d) The permittee shall document all periods of time when sufficient rail cars are not available for off-site transport of coke, and shall include documentation for all periods of time involving outside storage of petroleum coke.

(e) The permittee shall retain on-site at the facility all records kept in accordance with this condition for a period of at least five years from the date such records are generated.

(F30) FUEL MONITORING RECORDS [WAQSR Ch 6, Sec 2 Permits CT-1050 and MD-269]

(a) The permittee shall maintain records of the gas consumption of each of the Gas Con Reboiler (unit 19), Alky Reboiler (unit 25), and Indeck boilers (units 58 and 59). The fuel gas consumption documentation for each unit shall be sufficient to determine compliance with emission limitations.

(b) The permittee shall retain on-site, at the facility, all records of the fuel usage and fuel heat content for a period of at least five years from the date such records are generated.

(F31) TEST*ING AND VISUAL OBSERVATION* RECORDS
(Modified November 26, 2003) ***(Modified July 28, 2006)*** [WAQSR Ch 6, Sec 3 (h)(i)(C)(II)]

(a) For the emissions testing required under conditions F14, F15, F16, F23, *and F24*, the monitoring required under condition F26 ***(a)***, and for any additional testing required by the Division under condition F17 other than Method 9 observations, the permittee shall record, as applicable, the following:

(i) The date, place, and time of sampling or measurements;

(ii) The date(s) the analyses were performed;

(iii) The company or entity that performed the analyses;

(iv) The analytical techniques or methods used;

(v) The results of such analyses; and

(vi) The operating conditions as they existed at the time of sampling or measurement.

(b) For the Method 9 observations required under condition F19, and for any other Method 9 observations required by the Division under condition F17, the permittee shall keep field records in accordance with Section 2.2 of Method 9.

(c) For the Method 22 observations required under condition F19, the permittee shall keep field records in accordance with Sections 11.2 and 11.5 of Method 22.

(d) The permittee shall retain on-site at the facility the record of each test, measurement, or observation and support information for a period of at least five years from the date of the test, measurement, or observation.

(F32) CONTINUOUS EMISSIONS MONITORING RECORDS ***(Modified July 28, 2006)***
[WAQSR Ch 5, Sec 2 (g)***; Ch 6, Sec 2 Permits MD-1021 and MD-1115A;*** and Ch 6, Sec 2 (h)(i)(C)(II)]

(a) Recordkeeping for the continuous NO_X emissions monitoring systems on the Indeck boilers (units 58 and 59) shall comply with the requirements of WAQSR Chapter 5, Section 2 (g), as specified under conditions P60-Db1 (a)(iii) and P60-Db2 of this permit.

(b) Recordkeeping for the continuous H_2S emissions monitoring of the fuel gas system shall comply with the requirements of WAQSR Chapter 5, Section 2 (g), as specified in condition P60-J2. ***Additionally, the permittee shall maintain records of the hourly averages, the monthly averages and the calendar year average fuel gas H_2S concentration calculated under condition F21 (b) of this permit.***

(c) Recordkeeping for the continuous SO_2 emissions monitoring system on the Sulfur Incinerator shall comply with the requirements of WAQSR Chapter 5, Section 2 (g), as specified in condition P60-J2. ***Additionally, the permittee shall maintain records of the lb/hr and TPY emissions calculated under condition F21 (a) of this permit.***

(d) For the continuous ***opacity, CO,*** SO_2, and NO_X emissions monitoring systems on the FCCU, records shall be maintained of all measurements from the continuous monitoring system, performance testing measurements, performance audits, calibration checks, and maintenance performed on the system.

(e) The permittee shall retain on-site at the facility all records kept in accordance with this condition for a period of at least five years from the date such records are generated.

(F33) ***OPERATION AND*** MAINTENANCE RECORDS ***(Modified July 28, 2006)***
[WAQSR ***Ch 6, Sec 2 (k) October 14, 2003 and June 15, 2005 waivers;*** Ch 6, Sec 3 (h)(i)(A)(II); ***and*** W.S. 35-11-110 (June 4, 1994 Division letter)]

(a) The permittee shall record all maintenance and inspection activities performed under condition F9, F23 (d), and F26 ***(a)*** of this permit.

(b) The record of maintenance and inspection activities for each unit shall include:
- (i) The maintenance activity performed;
- (ii) The date, place, and time the activity was performed;
- (iii) The company and individual(s) that performed the activity;
- (iv) The purpose of the activity; and
- (v) An explanation for any deviation from the operation and maintenance requirements.

(c) The permittee shall retain on-site at the facility the record of each maintenance or inspection activity for a period of at least five years from the date of the activity.

(d) The permittee shall retain on-site at the facility, records of operations under the Sulfur Contingency Plan for a period of at least five years from the date such records are generated.

(e) ***The permittee shall record the date, time, and duration of events when a flame is not present at the Plant #1 Flare (unit 43) or the Plant #2 Flare (unit 44), or where the pilot flame monitoring systems required by condition F19 are not operational. These records shall be retained on-site at the facility for at least five years from the date such records are generated.***

(f) Records for the FCCU Waste Heat Exchanger shall be kept showing the date, time, and duration of all cleaning events, and the amount of injected material used during each cleaning event. The waste heat boiler cleaning records shall be kept for a period of at least five years from the date such records are generated.

(g) ***Records documenting the dates and duration of usage of the Porter Draw Diesel Water Pump Engine (unit 78) and the Caterpillar 3406E diesel backup air compressor engine (unit 79) shall be maintained for a period of at least five years from the date of engine usage.***

(F34) PROCESS RATE RECORDS *(Amended November 26, 2003)* ***(Modified July 28, 2006)***
[WAQSR ***Ch 6, Sec 2 Permit MD-1176 and*** Ch 6, Sec 3 (h)(i)(C)(II)]

(a) The permittee shall maintain records of the feed *and charge* rates such that compliance with the limits in condition F10 of this permit can be assessed.

(b) The permittee shall retain on-site at the facility all records kept in accordance with this condition for a period of at least five years from the date such records are generated.

(F35) TRUCK LOADING RACK RECORDS (Modified July 28, 2006)
[WAQSR Ch 6, Sec 2 Permit MD-1021 and Ch 6, Sec 3 (h)(i)(C)(II)]

(a) In addition to the records retained under 40 CFR 63 Subpart CC and condition P63-CC1, the permittee shall maintain records of the quantity of each product loaded each year and the VOC emissions calculated under condition F27 of this permit.

(b) The permittee shall retain on-site at the facility all records kept in accordance with this condition for a period of at least five years from the date such records are generated.

(F36) AMBIENT SO_2 & METEOROLOGICAL MONITORING RECORDS [WAQSR Ch 6, Sec 3 (h)(i)(C)(II)]

(a) The permittee shall maintain records of the data generated by a Division approved ambient SO_2 and meteorological monitoring program.

(b) The permittee shall retain on-site at the facility all ambient SO_2 and meteorological monitoring records kept in accordance with this condition for a period of at least five years from the date such records are generated.

Reporting Requirements

(F37) FUGITIVE EMISSIONS CONTROL REPORTS
[WAQSR April 14, 1998 Ch 6, Sec 2 (k) Waiver and Ch 6, Sec 3 (h)(i)(C)(III)]

(a) A summary report shall be submitted within 15 days from the end of each quarter. The summary report shall include:

(i) Any day there was outside coke storage activity, and the total amount of coke stored outside at the end of the quarter,

(ii) Days when sufficient rail cars were not available for off-site transportation of coke, and

(iii) The water usage and chemical dust suppressant usage such that compliance with condition F2 of this permit can be assessed.

(b) If coke is stored outside for more than 60 consecutive days, the permittee shall report to the Division on its effort to increase the rate at which coke is shipped off site. The permittee shall submit this report within 5 working days after coke has been stored outside for 60 consecutive days.

(c) The permittee shall submit written notification to the Division if any of any changes to the outside storage pile conditions which would result in significant changes in fugitive particulate matter emissions.

(d) The reports shall be submitted to the Division in accordance with condition G4 of this permit.

(F38) SEMIANNUAL VISIBLE EMISSIONS MONITORING REPORTS ***(Modified July 28, 2006)***
[WAQSR Ch 6, Sec 3 (h)(i)(C)(III)]

(a) The following shall be reported to the Division by January 31 and July 31 each year:

(i) Summary results of the visible emissions monitoring required under condition F19 (b) ***and (c)*** of this permit: each opacity measurement and any corrective actions taken upon detecting noncompliance with opacity limitations shall be included in the report.

(ii) Documentation all fuel fired sources listed in Table I of this permit are firing only refinery fuel gas or natural gas as specified under condition F19 (***d***) of this permit.

(iii) Summary results of the flare monitoring required under condition F19 (***e***) of this permit: only monitoring during which visible emissions are observed and any corrective actions taken upon observing visible emissions shall be included in the report. If no visible emissions are observed during the reporting period, this shall be stated in the report.

(b) All instances of deviations from the conditions of this permit must be clearly identified in each report.

(c) The reports shall be submitted to the Division in accordance with condition G4 of this permit.

(F39) PERFORMANCE TEST NOTIFICATIONS AND PROTOCOLS *(Modified November 26, 2003)* ***(Modified July 28, 2006)*** [WAQSR Ch 6, Sec 2 Permits MD-674, *MD-927A,* ***and MD-1115A***]

(a) The permittee shall notify the Division 15 days prior to conducting the initial performance tests required under conditions F15(d) ***and (e),*** and F16*(d)* ***and (e)*** of this permit.

(b) Prior to any initial performance tests conducted under conditions F15(d) ***and (e)*** and F16*(d)* ***and (e)***, the permittee shall submit a test protocol to the Division for approval at least 30 days prior to testing.

(c) The permittee may submit, for approval, test results from previous tests as satisfying the test requirements of conditions F15(d) and F16(d) of this permit.

(d) Notification of the annual emission tests required under conditions F15(b) and F16(c) of this permit, shall be provided to the Division fifteen (15) days prior to testing.

(e) The notification(s) and protocol(s) shall be submitted to the Division in accordance with condition G4 of this permit.

(F40) TEST REPORTS *(Modified November 26, 2003)* ***(Modified July 28, 2006)***
[WAQSR *Ch 6, Sec 2 Permits MD-927A* ***and MD-1115A,*** *and* Ch 6, Sec 3 (h)(i)(C)(III)]
The permittee shall submit the results of the tests required under conditions F14, F15, F16, F17, F23 *and F24* of this permit, and any additional tests the Division may require under condition F17, within 45 days of conducting the tests, ***except that reports for the tests required by conditions F15 (e) and F16 (e) shall be submitted within 30 calendar days of test completion***. The reports shall include the information specified under condition F31 and shall be submitted to the Division in accordance with condition G4 of this permit.

(F41) EXCESS EMISSIONS AND MONITORING SYSTEM PERFORMANCE REPORTS ***(Modified July 28, 2006)*** [WAQSR Ch 6, Sec 2 Permits MD-188, MD-674, ***and MD-1115A*** and Ch 5, Sec 2 (g)(iii) and (iv)]

(a) Excess emissions reporting for the continuous SO_2 and NO_X monitoring systems on the FCCU Regenerator (unit 34b) shall comply with the requirements of WAQSR Chapter 5, Section 2. ***Excess opacity reporting for the COM system on the FCCU, and excess emission reporting for the continuous CO monitoring system on the FCCU, shall comply with the requirements of WAQSR Chapter 5, Section 3 and conditions P63-UUU1 and UUU6.***

(b) For the purpose of reporting under this condition, excess emissions are defined as follows: For the continuous emissions monitoring system on the FCCU Regenerator (unit 34b), any one hour period when the average SO_2 mass emissions exceed 320.00 lb/hr, or any one hour period when the average NO_X emissions exceed 53.00 lb/hr.

(c) The permittee shall submit an excess emissions and monitoring systems performance report to the Administrator quarterly. All reports shall be postmarked by the 30th day following the end of each calendar quarter. Written reports of excess emissions shall include the following information:

(i) The magnitude of excess emissions computed in lb/hr, any conversion factor(s) used, and the date and time of commencement and completion of each time period of excess emissions.

(ii) Specific identification of each period of excess emissions that occurs during start-ups, shutdowns, malfunctions of the units listed in paragraph (a) of this condition. The nature and cause of any malfunction (if known), the corrective action taken or preventative measures adopted.

(iii) The date and time identifying each period during which the continuous monitoring system was inoperative except for zero and span checks and the nature of the system repairs or adjustments.

(iv) When no excess emissions have occurred or the continuous monitoring system(s) have not been inoperative, repaired, or adjusted, such information shall be stated in the report.

(v) One summary report form shall be submitted for each pollutant, in a format approved by the Division.

(d) The results of the quarterly audits required under condition F21(c) of this permit shall be submitted with the quarterly excess emission report.

(e) Excess emissions reporting requirements for the H_2S monitor on the refinery fuel gas system and the SO_2 monitor on the sulfur incinerator are specified in condition P60-J3. ***With the quarterly fuel gas excess emissions report, the permittee shall submit fuel gas H_2S monthly averages for the previous three calendar months, calculated as described in condition F21(b).***

(f) ***The permittee shall submit the annual average fuel gas H_2S concentration, calculated as described in condition F21(b), with the annual emissions inventory required by condition F9 of this permit.***

(g) Excess emissions reporting requirements for the NO_X monitors on the Indeck Boilers are specified in condition P60-Db4.

(h) The reports shall be submitted to the Division in accordance with condition G4 of this permit.

(F42) OPERATION AND MAINTENANCE REPORTS ***(Modified <u>and amended</u> July 28, 2006)***
[WAQSR Ch 6, Sec 3 (h)(i)(C)(III) and August 21, 2000 Ch 6, Sec 2 (k) waiver]

(a) (i) The permittee shall report to the Division by January 31 and July 31 each year whether the permittee has adhered to the Sulfur Contingency Plan described in Appendix J of this permit.

(ii) Any deviations from the Sulfur Contingency Plan must be clearly identified in each report.

(iii) If the permittee has adhered to the Sulfur Contingency Plan during the reporting period, this shall be stated in the report.

(b) (i) The permittee shall report to the Division by January 31 and July 31 each year whether the permittee has adhered to the Wastewater System operation and maintenance required by condition F9 and F26 ***(a)*** of this permit.

(ii) Any deviations from the Wastewater System operation and maintenance requirements must be clearly identified in each report.

(iii) If the permittee has adhered to the Wastewater System operation and maintenance requirements during the reporting period, this shall be stated in the report.

(c) The permittee shall report to the Division by January 31 and July 31 each year whether the permittee has limited the FCCU Waste Heat Exchanger cleanings to one 20 lb injection of catalyst per day in accordance with condition F9 of this permit.

(d) (i) The permittee shall report to the Division by January 31 and July 31 each year whether the permittee has adhered to the fuel meter maintenance plan described in Appendix N of this permit.

(ii) Any deviations from the fuel meter maintenance plan requirements must be clearly identified in each report.

(iii) If the permittee has adhered to the fuel meter maintenance plan requirements during the reporting period, this shall be stated in the report.

(e) On August 21, 2000, a Chapter 6, Section 2(k) waiver was issued to allow the loading of sweet naphtha from the existing bulk gasoline terminal. The permittee shall provide written notification if any of the conditions or sources in the application have been modified which would result in significant changes to the stated facility's emissions.

(f) (i) The permittee shall report to the Division by January 31 and July 31 each year whether the permittee has adhered to the manufacturer's recommendations ***or good maintenance practice*** for minimizing NO_X emissions from the sources listed in condition F23(d).

(ii) Any deviations from the manufacturer's recommendations ***or good maintenance practice*** must be clearly identified in each report.

(iii) If the permittee has adhered to the manufacturer's recommendations ***or good maintenance practice*** during the reporting period, this shall be stated in the report.

(g) (i) The permittee shall report to the Division by January 31 and July 31 each year whether the permittee has maintained the engines listed in condition F9 (e) in accordance with the manufacturer's recommendations, and the hours of usage for each engine during the reporting period and the total hours of usage for each engine for the calendar year.

(ii) Any deviations from the manufacturer's recommendations or hours of usage limitation must be clearly identified in each report.

(iii) If the permittee has adhered to the manufacturer's recommendations during the reporting period, this shall be stated in the report.

(h) The permittee shall report to the Division by January 31 and July 31 each year the date, time, and duration of events when a flame was not present at the Plant #1 Flare (unit 43) or the Plant #2 Flare (unit 44). The permittee shall also report the date, time, and duration of events where the pilot on either the Plant #1 Flare or the Plant #2 Flare was not monitored as required by condition F19. If the pilot flame for each flare was continuously monitored and present during the reporting period, this shall be stated in the report.

(i) All reports shall be submitted to the Division in accordance with condition G4 of this permit.

(F43) PROCESS RATE REPORTS *(Amended November 26, 2003)* ***(Modified July 28, 2006)***
[WAQSR Ch 6, Sec 2 Permits ***MD-1115A and MD-1176*** and Ch 6, Sec 3 (h)(i)(C)(III)]

(a) ***Permittee shall submit a charge rate report to the Division by the end of the calendar month following each calendar quarter. This report shall contain the following:***

(i) Monthly crude charge rate averages for the previous 12 months,

(ii) The rolling 12-month crude charge rate average,

(iii) Daily Coker charge rates,

(iv) Monthly Coker charge rate averages,

(v) Daily distillate hydrotreater (Unifiner) charge rates,

(vi) Monthly distillate hydrotreater (Unifiner) charge rate averages,

(vii) Daily FCCU charge rates, and

(viii) Daily sulfur feed rates to the sulfur complex (#1 and #2 Sulfur Recovery Units).

(b) The reports shall be submitted to the Division in accordance with condition G4 of this permit.

(F44) VRU EMISSIONS MONITORING REPORTS (Modified July 28, 2006)
[WAQSR Ch 6, Sec 2 Permit MD-1021 and Ch 6, Sec 3 (h)(i)(C)(III)]
In addition to the VOC monitoring report(s) required under condition P63-CC1 of this permit, the permittee shall report to the Division by January 31 each year the annual VOC emissions from the Truck Loading Rack VRU, calculated using the average monitored concentration and the total volume of gasoline and non-gasoline products loaded. The reports shall be submitted to the Division in accordance with condition G4 of this permit.

(F45) AMBIENT AIR MONITORING NETWORK AND METEOROLOGICAL STATION REPORTS
[WAQSR Ch 6, Sec 2 Permit MD-254 and Ch 6, Sec 3 (h)(i)(C)(III)]

(a) The ambient SO_2 and meteorological data retained in accordance with condition F36 of this permit shall be submitted to the Division in an acceptable format within 60 days of the end of each calendar quarter.

(b) The reports shall be submitted to the Division in accordance with condition G4 of this permit.

(F46) REPORTING EXCESS EMISSIONS & DEVIATIONS FROM PERMIT REQUIREMENTS
[WAQSR Ch 6, Sec 3 (h)(i)(C)(III)]

(a) General reporting requirements are described under the General Conditions of this permit. The Division reserves the right to require reports as provided under condition G1 of this permit.

(b) Emissions which exceed the limits specified in this permit shall be reported annually with the emission inventory unless specifically superseded by condition G17, condition G21, or other condition(s) of this permit. The probable cause of such exceedence, the duration of the exceedence, the magnitude of the exceedence, and any corrective actions or preventative measures taken shall be included in this annual report. For sources and pollutants which are not continuously monitored, if at any time emissions exceed the limits specified in this permit by 100 percent, or if a single episode of emission limit exceedence spans a period of 24 hours or more, such exceedence shall be reported to the Division within one working day of the exceedence. (Excess emissions due to an emergency shall be reported as specified in condition G17. Excess emissions due to abnormal conditions or equipment malfunction shall be reported as specified in condition G21.)

(c) Any other deviation from the conditions of this permit shall be reported to the Division in writing within 30 days of the deviation or discovery of the deviation.

(F47) FIRE TRAINING ACTIVITIES REPORTING [WAQSR April 25, 1997 (N47) Ch 6, Sec 2 (k) Waiver]
The permittee shall contact the Division prior to any fuel burning fire training activities.

Accidental Release Prevention Requirements

(F48) ACCIDENTAL RELEASE PREVENTION REQUIREMENTS [40 CFR Part 68]

(a) The permittee shall meet all requirements of 40 CFR Part 68 as they apply to the facility.

(b) The permittee shall submit, as part of the annual compliance certification submitted under condition C1 of this permit, a certification statement concerning the facility's compliance with all requirements of 40 CFR Part 68, including the registration and submission of a Risk Management Plan.

Sulfur Dioxide Emissions Inventory Requirements (Modified July 28, 2006)

(F49) SULFUR DIOXIDE EMISSIONS INVENTORY [WAQSR Ch 14, Sec 3]
The permittee shall report SO_2 emissions annually as required by WAQSR Ch 14, Sec 3. SO_2 emissions shall be estimated in accordance with Ch 14 Sec 3(b), and adjusted in accordance with Ch 14 Sec 3(c) if necessary.

(F50) SULFUR DIOXIDE EMISSIONS INVENTORY RECORDS [WAQSR Ch 14, Sec 3(b)]

(a) The permittee shall maintain all records used in the calculation of SO_2 emissions, including but not limited to the following:

(i) Amount of fuel consumed;

(ii) Percent sulfur content of fuel and how the content was determined;

(iii) ***Quantity of product produced;***

(iv) ***Emissions monitoring data;***

(v) ***Operating data; and***

(vi) ***How the emissions are calculated, including monitoring/estimation methodology with a demonstration that the selected methodology is acceptable under Chapter 14, Section 3.***

(b) ***The permittee shall maintain records of any physical changes to facility operations or equipment, or any other changes (e.g. raw material or feed) that may affect emissions projections of SO_2.***

(c) ***The permittee shall retain all records and support information for compliance with this condition and with the reporting requirements of condition F51 at the facility, for a period of at least ten (10) years from the date of establishment, or if the record was the basis for an adjustment to the milestone, five years after the date of an implementation plan revision, whichever is longer.***

(F51) *SULFUR DIOXIDE EMISSIONS INVENTORY REPORTS [WAQSR Ch 14, Sec 3(b) and (c)]*

(a) ***The permittee shall report calendar year SO_2 emissions by April 15th of the following year. The inventory shall be submitted in the format specified by the Division.***

(b) ***Emissions from startup, shutdown, and upset conditions shall be included in the inventory.***

(c) ***If the permittee uses a different emission monitoring or calculation method than was used to report SO_2 emissions in 1998, the permittee shall adjust reported SO_2 emissions to be comparable to the emission monitoring or calculation method that was used in 1998. The calculations that are used to make this adjustment shall be included with the annual emission report.***

(d) ***The annual reports shall be submitted in accordance with condition G4 of this permit.***

ODOR CONTROL PROGRAM

(ODOR-1) ODOR CONTROL PROGRAM REQUIREMENTS ***(Modified July 28, 2006)***
[WAQSR Chapter 6, Section 2 Permit ***MD-1176***]

(a) The permittee shall not store odorous coker naphtha in open vented storage tanks.

(b) The permittee shall maintain in good operating condition a spare knockout drum pump of adequate capacity at the coker unit, which shall be brought on-line immediately in the event of failure of the primary operating pump to prevent the release of coker naphtha to the waste water treatment system.

(c) The permittee shall maintain the spare 5800 barrels/day capacity 1000 Horsepower coker compressor (unit 48) in good operating condition for use as a back-up to the primary coker compressor (unit 47). The permittee shall limit the coker operation such that the capacity of the coker compressor (unit 47 or 48) in use at any given time is not exceeded.

(d) The permittee shall maintain the video camera in good operating condition in order to monitor operation of the coker flare from the coker control room.

(e) The permittee shall conduct monitoring, recordkeeping, and reporting for the entire refinery based on 40 CFR 60 Subpart GGG to control fugitive hydrocarbon and odorous emissions from valves, flanges, pumps, and compressors. This condition applies to all equipment leaks regardless of the date of construction and/or VOC content; only valves, flanges, pumps, and compressors which do not have the potential to contribute to VOC or odorous emissions may be excluded.

(i) Overlapping fugitive equipment leak detection and repair programs: Equipment leaks that, in addition to being subject to the Odor Control Program, are also subject to the leak detection and repair provisions of 40 CFR 60 Subpart QQQ, 40 CFR 60 Subpart GGG, 40 CFR 63 Subpart CC, CFR 63 Subpart UUU, or the wastewater provisions of condition F9 (b) of this permit are not required to comply with conditions Odor-1 through Odor-4. Monitoring, recordkeeping, and reporting for these sources shall follow the applicable conditions of this permit.

(ii) For the remaining equipment leaks, the permittee shall perform the monitoring and inspections, recordkeeping, and reporting in accordance with 40 CFR 60 Subpart GGG in the same manner as required for affected facilities. 40 CFR 60 Subparts GGG and VV are attached as Appendix B of this permit.

(f) The permittee shall control emissions from the neutralization pit at the Alkylation unit (CBM Pit at the Alky Unit) utilizing Division approved control measures.

(g) The permittee shall install and maintain a dedicated activated carbon canister deodorant system capable of treating the maximum air flow rate through the Induced Air Floatation (IAF) Unit. The IAF Unit shall be sealed to prevent the escape of odorous emissions and the air leaving the unit shall be routed through the carbon canister deodorant system. The carbon canisters shall be monitored to determine when they become saturated and replaced within one working day of reaching saturation.

(h) The permittee shall install a system on the three coking drums associated with the coking process which will inject an odor abatement compound such as NALCO 8452 PLUS, or an equivalent product, into the coke drum vents. The injection system will be activated immediately prior to venting the coke drums, and will be terminated once the coke drums are drained of water.

(ODOR-2) ODOR CONTROL PROGRAM MONITORING ***(Modified July 28, 2006)***
[WAQSR Chapter 6, Section 2 Permit ***MD-1176***]

(a) The permittee shall monitor the operating hours (dates and times) for each of the coker compressors.

(b) The permittee shall perform the monitoring and inspections required under condition ODOR-1(e) of this permit in accordance with 40 CFR 60 Subpart GGG as would be required for affected facilities. 40 CFR 60 Subparts GGG and VV are attached as Appendix B of this permit.

(c) The permittee shall monitor the carbon canisters on the Induced Air Floatation Unit to determine when they become saturated.

(d) The permittee shall monitor the usage of the odor abatement compound used at the coker drum vents as required under condition ODOR-1(h).

(ODOR-3) ODOR CONTROL PROGRAM RECORDS ***(Modified July 28, 2006)***
[WAQSR Chapter 6, Section 2 Permit ***MD-1176***]

(a) (i) The permittee shall record all maintenance and inspection activities performed in compliance with conditions ODOR-1 and ODOR-2 of this permit.

(ii) The record of maintenance and inspection activities for each unit shall include:
(A) The inspection or maintenance activity performed;
(B) The date, place, and time the activity was performed;
(C) The company and individual(s) that performed the activity;
(D) The purpose of the activity; and
(E) An explanation for any deviation from the program to control odorous emissions.

(b) For the leak detection and repair program required under condition ODOR-1(e) of this permit the permittee shall keep records in accordance with 40 CFR 60 Subpart GGG and WAQSR Chapter 5, Section 2.

(c) The permittee shall record each failure of the coker naphtha primary operating pump, and each required use of the spare knockout drum pump shall be recorded. Any delay bringing the spare knockout drum pump on-line which results in release of coker naphtha to the waste water treatment system shall be recorded.

(d) The permittee shall record whenever the 1232 Horsepower Compressor (unit 47) is out of service, during periods requiring compression at the coker unit to properly control emissions. The permittee shall record each use of the spare 1000 Horsepower Compressor (unit 48), and shall record anytime the 1232 Horsepower Compressor (unit 47) is out of service, and the 1000 Horsepower Compressor is not brought on-line to control emissions. The permittee shall record anytime the capacity of the operating coker compressor (unit 47 or 48) is exceeded.

(e) The permittee shall record any events in which coker naphtha is stored in an open vented storage tank(s). The permittee shall record the date, amount of coker naphtha stored, and tank(s) in which the coker naphtha is stored, for each day of violation.

(f) The permittee shall retain on-site at the facility all records kept in accordance with this condition for a period of at least five years from the date such records are generated.

(ODOR-4) ODOR CONTROL PROGRAM REPORTS ***(Modified July 28, 2006)***
[WAQSR Chapter 6, Section 2 Permit ***MD-1176*** and WAQSR Ch 6, Sec 3 (h)(i)(C)(III)]

(a) The permittee shall report to the Division by January 31 and July 31 each year whether the permittee has adhered to the Odor Control Program as described in condition ODOR-1. Additionally, the report shall specifically state whether:
(i) The permittee controlled emissions from the neutralization pit at the Alkylation unit (CBM Pit at Alky Unit) utilizing the Division approved control measures;
(ii) The permittee performed the monitoring, inspections, recordkeeping, and reporting in accordance with 40 CFR 60 Subpart GGG as required by condition ODOR-1(e) and ODOR-2(b) of this permit, except as provided in condition ODOR-1(e)(i);
(iii) The permittee maintained the spare 1000 horsepower compressor (unit 48) in good operating condition for use as a back-up to the primary coker compressor (unit 47);
(iv) The permittee limited coker operation so that the capacity of the compressor in use at any given time was not exceeded;
(v) The permittee maintained the video camera in good operating condition in order to monitor operation of the coker flare from the coker control room;
(vi) The permittee stored odorous coker naphtha in open vented storage tanks;
(vii) The permittee maintained in good operating condition a spare knockout drum pump of adequate capacity at the coker unit; and
(viii) Coker naphtha was released to the waste water treatment system.

(b) The permittee shall submit summary results of the VOC monitoring and inspections required by condition ODOR-1(e)(ii) of this permit by March 1st and September 1st each year.

(c) Any deviations from the Odor Control Program must be clearly identified in each report.

(d) If the permittee has adhered to the Odor Control Program during the reporting period, this shall be stated in the report.

(e) All reports shall be submitted to the Division in accordance with condition G4 of this permit.

WAQSR CHAPTER 5, SECTION 2 NEW SOURCE PERFORMANCE STANDARDS (NSPS) AND 40 CFR 60 SUBPART J REQUIREMENTS

(Subpart J is attached as Appendix A)

(P60-J1) SUBPART J REQUIREMENTS ***(Modified July 28, 2006)***

[40 CFR 60 Subpart J: WAQSR Ch 6, Sec 2 Permits MD-188, MD-269, MD-674, ***MD-1115A, and MD-1176***; January 21, 1995, November 21, 1995 and April 25, 1997 (L17) WAQSR Ch 6, Sec 2 (k) Waivers]

The permittee shall meet all requirements of 40 CFR 60 Subpart J as they apply to the affected fuel gas combustion devices (units ***10,*** 11, 12, 13, ***14, 15,16,*** 17, ***18,*** 19, 20, 21, 22, 23, 24, 25, 34a, 36, 37, ***43, 44,*** 45, 49, 49a, 50, 58, 59, ***and 69***), and the Claus Sulfur Recovery Plants and Sulfur Incinerator (units 42, 60, and 61).

(a) The permittee shall meet the standards specified in 40 CFR 60.104 (a)(1) and §60.104 (a)(2)(i).

(b) The permittee shall meet all monitoring requirements specified in §60.105 (a)(4) and §60.105 (a)(5).

(P60-J2) RECORDKEEPING [WAQSR Ch 5, Sec 2 (g)(ii) and (g)(v)]

(a) Recordkeeping for the continuous emission monitoring systems required under P60-J1(b) of this permit shall comply with the requirements of WAQSR Chapter 5, Section 2(g).

(b) The permittee shall maintain records of the occurrence and duration of any startup, shutdown, or malfunction in the operation of the affected fuel gas combustion devices and the Claus Sulfur Recovery Plants and Sulfur Incinerator; any malfunction of the air pollution control equipment; or any periods during which the continuous monitoring system is inoperative. These records shall be retained on-site at the facility for a period of at least five years from the date of such occurrences.

(c) The permittee shall maintain records of all measurements, including continuous monitoring system, monitoring device, and performance testing measurements; all continuous monitoring system performance evaluations; all continuous monitoring system or monitoring device calibration checks; adjustments and maintenance performed on these systems or devices; and all other information required by the NSPS conditions of this permit, recorded in a permanent form suitable for inspection. These records shall be retained on-site at the facility for a period of at least five years from the date such records are generated.

(P60-J3) QUARTERLY EXCESS EMISSIONS REPORTS ***(Modified July 28, 2006)***

[WAQSR Ch 5, Sec 2 (g)(iii) and (iv); WAQSR Ch 6, Sec 2 Permits MD-188, MD-269, ***MD-1115A, and MD-1176***; January 21, 1995 and April 25, 1997 (L17) WAQSR Ch 6, Sec 2 (k) Waivers]

(a) The permittee shall submit an excess emissions and monitoring systems performance report (excess emissions are defined in paragraph (c) of this condition) and/or a summary report form (see paragraph (a)(v) of this condition) to the Administrator quarterly. All reports shall be postmarked by the 30th day following the end of each calendar quarter. Written reports of excess emissions shall include the following information:

(i) The magnitude of excess emissions computed in accordance with WAQSR Chapter 5, Section 2(j)(viii), any conversion factor(s) used, and the date and time of commencement and completion of each time period of excess emissions. The process operating time during the reporting period.

(ii) Specific identification of each period of excess emissions that occurs during start-ups, shutdowns, malfunctions of the fuel gas combustion devices and the Claus Sulfur Recovery Plants and Sulfur Incinerator. The nature and cause of any malfunction (if known), the corrective action taken or preventative measures adopted.

(iii) The date and time identifying each period during which the continuous monitoring system was inoperative except for zero and span checks and the nature of the system repairs or adjustments.

(iv) When no excess emissions have occurred or the continuous monitoring system(s) have not been inoperative, repaired, or adjusted, such information shall be stated in the report.

(v) One summary report form for each pollutant monitored at each affected facility in a format approved by the Division.

(A) If the total duration of excess emissions for the reporting period is less than one percent of the total operating time for the reporting period and continuous monitoring system downtime for the reporting period is less than five percent of the total operating time for the reporting period, only the summary report form shall be

submitted and the excess emission report described in paragraph (a) of this condition need not be submitted unless requested by the Administrator.

(B) If the total duration of excess emissions for the reporting period is one percent or greater of the total operating time for the reporting period or the total continuous monitoring system downtime for the reporting period is five percent or greater of the total operating time for the reporting period, the summary report form and the excess emission report described in paragraph (a) of this condition shall both be submitted.

(b) For the purpose of reporting under this condition, excess emissions are defined as follows:

(i) For sulfur dioxide from affected fuel gas combustion devices, all rolling 3-hour periods during which the average concentration of H_2S as measured by the H_2S continuous monitoring system under §60.105(a)(4) exceeds 230 mg/dscm (0.10 gr/dscf or 163 ppm_v).

(ii) For sulfur dioxide from the Claus sulfur recovery plants, all 12-hour periods during which the average concentration of SO_2 as measured by the SO_2 continuous emission monitoring system under §60.105(a)(5) exceeds 250 ppm_v (dry basis, zero percent excess air).

(iii) For sulfur dioxide from the sulfur incinerator (unit 42), all 1-hour periods during which SO_2 emissions exceed 18.6 lb/hr.

(iv) For sulfur dioxide from the sulfur incinerator (unit 42), all calendar years during which SO_2 emissions exceed 35.0 TPY.

(c) Notwithstanding the frequency of reporting requirements specified in paragraph (a) of this condition, a permittee who is required by an applicable subpart to submit excess emissions and monitoring systems performance reports (and summary reports) on a quarterly (or more frequent) basis may reduce the frequency of reporting for that standard to semiannual as described in WAQSR Chapter 5, Section 2(g)(iv). Any reduction in reporting frequency requires a significant modification to this operating permit pursuant to WAQSR Chapter 6, Section 3 (d)(vi)(C).

(d) The reports shall be submitted to the Division in accordance with condition G4 of this permit.

(P60-J4) GOOD AIR POLLUTION CONTROL PRACTICE [WAQSR Ch 5, Sec 2 (i)(iv)]

At all times, including periods of startup, shutdown, and malfunction, the permittee shall, to the extent practicable, maintain and operate the fuel gas combustion devices and the Claus Sulfur Recovery Plants and Sulfur Incinerator including associated air pollution control equipment in a manner consistent with good air pollution control practice for minimizing emissions.

WAQSR CHAPTER 5, SECTION 2 NEW SOURCE PERFORMANCE STANDARDS (NSPS) AND 40 CFR 60 SUBPART GGG REQUIREMENTS

(Subparts GGG and VV are attached as Appendix B)

(P60-GGG1) SUBPART GGG REQUIREMENTS ***(Modified July 28, 2006)***
[WAQSR Ch 6, Sec 2 Permits MD-179, MD-188, ***and MD-1021;*** 40 CFR 60, Subpart GGG; 40 CFR 63.640 (p); and W.S. 35-11-110 (July 26, 1999 & May 1, 2002 Division letters)]

The permittee shall meet all requirements of 40 CFR 60 Subpart GGG as they apply to the Crude Unit (including vacuum portion), Distillate Hydrotreater (Unifiner) Unit, Delayed Coker Unit, #3 Amine Treater Unit, #2 Sulfur Plant Unit, Gas Desulfurization Unit, Tail Gas Treating Unit, ***Truck Loading Dock,*** and associated equipment at the facility.

(a) The permittee shall meet all standards, test methods and procedures, and recordkeeping and reporting requirements specified in 40 CFR 60.592 with exceptions specified in §60.593.

(b) The summary results of the VOC monitoring shall be reported to the Division in accordance with condition G4 of this permit within 60 days of the end of the monitoring period.

(c) Equipment leaks at the Delayed Coker Unit ***and the Truck Loading Dock*** that are also subject to the provisions of 40 CRF 63 Subpart CC shall comply only with the requirements of 40 CRF 63 Subpart CC as specified in §63.640 (p).

(P60-GGG2) RECORDKEEPING [WAQSR Ch 5, Sec 2 (g)(ii) and (g)(v)]

(a) The permittee shall maintain records of the occurrence and duration of any startup, shutdown, or malfunction in the operation of the Distillate Hydrotreater (Unifiner) Unit, Delayed Coker Unit, #3 Amine Treater Unit, #2 Sulfur Plant Unit, Gas Desulfurization Unit, and Tail Gas Treating Unit; any malfunction of the air pollution control equipment; or any periods during which a continuous monitoring system or monitoring device is inoperative. These records shall be retained on-site at the facility for a period of at least five years from the date of such occurrences.

(b) The permittee shall maintain records of all measurements, reports, and other information required by the NSPS conditions of this permit recorded in a permanent form suitable for inspection. These records shall be retained on-site at the facility for a period of at least five years from the date such records are generated.

(P60-GGG3) GOOD AIR POLLUTION CONTROL PRACTICE [WAQSR Ch 5, Sec 2 (i)(iv)]

At all times, including periods of startup, shutdown, and malfunction, the permittee shall, to the extent practicable, maintain and operate the Distillate Hydrotreater (Unifiner) Unit, Delayed Coker Unit, #3 Amine Treater Unit, #2 Sulfur Plant Unit, Gas Desulfurization Unit, and Tail Gas Treating Unit including associated air pollution control equipment in a manner consistent with good air pollution control practice for minimizing emissions.

WAQSR CHAPTER 5, SECTION 2 NEW SOURCE PERFORMANCE STANDARDS (NSPS) AND 40 CFR 60 SUBPART QQQ REQUIREMENTS

(Subpart QQQ is attached as Appendix C)

(P60-QQQ1) SUBPART QQQ REQUIREMENTS ***(Modified July 28, 2006)***
[***WAQSR Ch 6, Sec 2 Permit MD-798,*** 40 CFR 60 Subpart QQQ and 40 CFR 63.640 (o)]

The permittee shall meet all requirements of 40 CFR 60 Subpart QQQ as they apply to the affected facilities of the refinery waste water systems (Waste Water Treatment Plant and individual drain systems, junction boxes, unburied sewer lines, oil/water separators, slop oil tanks, storage vessels, or other auxiliary facilities at the Coker Unit, Crude Unit De-Salter, Distillate Hydrotreater Unit (Unifiner), #3 Amine Unit, #2 Sulfur Recovery Unit, Tail Gas Treating Unit, ***Gasoline Desulfurization Unit,*** and the Hydrogen Plant, including closed vent systems associated with these processes).

(a) The permittee shall meet all standards specified in §60.692 or §60.693.
(b) The permittee shall meet all monitoring requirements specified in §60.695.
(c) The permittee shall meet all testing requirements and compliance provisions specified in §60.696.
(d) The permittee shall meet all recordkeeping requirements specified in §60.697.
(e) The permittee shall meet all reporting requirements specified in §60.698. The reports shall be submitted to the Division in accordance with condition G4 of this permit by January 31 and July 31 each year.

(P60-QQQ2) RECORDKEEPING [WAQSR Ch 5, Sec 2 (g)(ii) and (g)(v)]

(a) The permittee shall maintain records of the occurrence and duration of any startup, shutdown, or malfunction in the operation of the affected facilities of the refinery waste water systems; any malfunction of the air pollution control equipment; or any periods during which a continuous monitoring system or monitoring device is inoperative. These records shall be retained on-site at the facility for a period of at least five years from the date of such occurrences.
(b) The permittee shall maintain records of all measurements, reports, and other information required by the NSPS conditions of this permit recorded in a permanent form suitable for inspection. These records shall be retained on-site at the facility for a period of at least five years from the date such records are generated.

(P60-QQQ3) GOOD AIR POLLUTION CONTROL PRACTICE [WAQSR Ch 5, Sec 2 (i)(iv)]

At all times, including periods of startup, shutdown, and malfunction, the permittee shall, to the extent practicable, maintain and operate the affected facilities of the refinery waste water systems including associated air pollution control equipment in a manner consistent with good air pollution control practice for minimizing emissions.

WAQSR CHAPTER 5, SECTION 2 NEW SOURCE PERFORMANCE STANDARDS (NSPS) AND 40 CFR 60 SUBPART Db REQUIREMENTS

(40 CFR 60 Subpart Db is attached as Appendix D)

(P60-Db1) 40 CFR 60 SUBPART Db REQUIREMENTS [WAQSR Ch 5, Sec 2 (j)(v) and Ch 6, Sec 2 Permits CT-1050 and 40 CFR 60 Subpart Db]

(a) The permittee shall meet all requirements of 40 CFR 60 Subpart Db as they apply to Indeck boilers (units 58 and 59).

(i) The permittee shall meet all standards as specified in 40 CFR 60.44b (a)(1)(i), (h), and (i).

(ii) The permittee shall meet all monitoring requirements as specified in §60.48b (b), (c), (d), (e), and (f).

(iii) The permittee shall meet all recordkeeping and reporting requirements as specified in §60.49b (d), (g), (h), and (i). The quarterly excess emissions reports shall be submitted in accordance with condition G4 of this permit.

(b) Except for system breakdown, repairs, calibration checks, and zero and span adjustments required under WAQSR Chapter 5, Section 2 (j)(iv), all continuous monitoring systems shall be in continuous operation and shall meet minimum frequency of operation requirements as follows: all continuous monitoring systems referenced by WAQSR Chapter 5, Section 2 (j)(iii)(A) and (B) for measuring emissions, except opacity, shall complete a minimum of one cycle of operation (sampling, analyzing, and data recording) for each successive 15 minute period.

(P60-Db2) RECORDKEEPING [WAQSR Ch 5, Sec 2 (g)(ii) and (g)(v)]

(a) The permittee shall maintain records of the occurrence and duration of any startup, shutdown, or malfunction in the operation of the Indeck boilers; any malfunction of the air pollution control equipment; or any periods during which a continuous monitoring system or monitoring device is inoperative.

(b) The permittee shall maintain records of all measurements, including continuous monitoring system, monitoring device, and performance testing measurements; all continuous monitoring system performance evaluations; all continuous monitoring system or monitoring device calibration checks; adjustments and maintenance performed on these systems or devices; reports; and other information required by the NSPS conditions of this permit recorded in a permanent form suitable for inspection.

(c) All records collected under this subpart shall be retained on-site at the facility for a period of at least five years from the date of such occurrences.

(P60-Db3) GOOD AIR POLLUTION CONTROL PRACTICE [WAQSR Ch 5, Sec 2 (i)(iv)]

At all times, including periods of startup, shutdown, and malfunction, the permittee shall, to the extent practicable, maintain and operate the Indeck boilers including associated air pollution control equipment in a manner consistent with good air pollution control practice for minimizing emissions.

(P60-Db4) EXCESS EMISSIONS AND MONITORING SYSTEM PERFORMANCE REPORTS [WAQSR Ch 5, Sec 2 (g)(iii) and (iv) and Ch 6, Sec 2 Permit CT-1050]

(a) Excess emissions reporting for the continuous NO_X emissions monitoring systems on the Indeck boiler (units 58 and 59) shall comply with the requirements of WAQSR Chapter 5, Section 2 (g).

(b) The permittee shall submit an excess emissions and monitoring systems performance report (excess emissions are defined in paragraph (c) of this condition) and/or a summary report form (see paragraph (b)(v) of this condition) to the Administrator quarterly. All reports shall be postmarked by the 30th day following the end of each calendar quarter. Written reports of excess emissions shall include the following information:

(i) The magnitude of excess emissions computed in accordance with WAQSR Chapter 5, Section 2 (j)(viii), any conversion factor(s) used, and the date and time of commencement and completion of each time period of excess emissions. The process operating time during the reporting period.

(ii) Specific identification of each period of excess emissions that occurs during start-ups, shutdowns, malfunctions of the units listed in paragraph (a) of this condition. The nature and cause of any malfunction (if known), the corrective action taken or preventative measures adopted.

(iii) The date and time identifying each period during which the continuous monitoring system was inoperative except for zero and span checks and the nature of the system repairs or adjustments.

(iv) When no excess emissions have occurred or the continuous monitoring system(s) have not been inoperative, repaired, or adjusted, such information shall be stated in the report.

(v) One summary report form shall be submitted for NO_X emissions from each boiler in a format approved by the Division.

(A) If the total duration of excess emissions for the reporting period is less than one percent of the total operating time for the reporting period and continuous monitoring system downtime for the reporting period is less than five percent of the total operating time for the reporting period, only the summary report form shall be submitted and the excess emission report described in paragraph (b) of this condition need not be submitted unless requested by the Administrator.

(B) If the total duration of excess emissions for the reporting period is one percent or greater of the total operating time for the reporting period or the total continuous monitoring system downtime for the reporting period is five percent or greater of the total operating time for the reporting period, the summary report form and the excess emission report described in paragraph (b) of this condition shall both be submitted.

(c) For the purpose of reporting under this condition, excess emissions are defined as follows: For the Indeck boilers (units 58 and 59), any 30-day rolling average NO_X emission rate as determined under 60.46b (e), which exceeds 0.10 lb/MMBTU heat input.

(d) Notwithstanding the frequency of reporting requirements specified in paragraph (b) of this condition, a permittee who is required by an applicable subpart to submit excess emissions and monitoring systems performance reports (and summary reports) on a quarterly (or more frequent) basis may reduce the frequency of reporting for that standard to semiannual as described in WAQSR Chapter 5, Section 2(g)(iv). Any reduction in reporting frequency requires a significant modification to this operating permit pursuant to WAQSR Chapter 6, Section 3 (d)(vi)(C).

WAQSR CHAPTER 5, SECTION 2 NEW SOURCE PERFORMANCE STANDARDS (NSPS) AND 40 CFR 60 SUBPART Ka REQUIREMENTS

(Subpart Ka is attached as Appendix E)

(P60-Ka1) SUBPART Ka REQUIREMENTS [WAQSR Chapter 5, Section 2 and 40 CFR 60 Subpart Ka]

The permittee shall meet all requirements of WAQSR Chapter 5, Section 2 and 40 CFR 60 Subpart Ka as they apply to Tank 1-107.

(a) The permittee shall meet all standards as specified in Subpart Ka §60.112a.

(b) The permittee shall meet all testing, reporting, and procedural requirements as specified in Subpart Ka §60.113a.

(c) The permittee shall meet all monitoring requirements as specified in Subpart Ka §60.115a.

(P60-Ka2) RECORDKEEPING [WAQSR Chapter 5, Section 2 (g)(ii) and (g)(v)]

(a) The permittee shall maintain records of the occurrence and duration of any start-up, shutdown, or malfunction in the operation of the affected tank or malfunction of the air pollution control equipment. These records shall be retained on-site at the facility for a period of at least five years from the date of such occurrences.

(b) The permittee shall maintain records of all measurements, reports, and other information required by the NSPS conditions of this permit recorded in a permanent form suitable for inspection. These records shall be retained on-site at the facility for a period of at least five years from the date such records are generated.

(P60-Ka3) GOOD AIR POLLUTION CONTROL PRACTICE [WAQSR Chapter 5, Section 2 (i)(iv)]

At all times, including periods of malfunction, the permittee shall, to the extent practicable, maintain and operate the air pollution control equipment in a manner consistent with good air pollution control practice for minimizing emissions.

WAQSR CHAPTER 5, SECTION 2 NEW SOURCE PERFORMANCE STANDARDS (NSPS) AND 40 CFR 60 SUBPART Kb REQUIREMENTS

(Subpart Kb is attached as Appendix F)

(P60-Kb1) SUBPART Kb REQUIREMENTS [40 CFR 60 Subpart Kb] ***(Modified July 28, 2006)***

The permittee shall meet all requirements of WAQSR Chapter 5, Section 2 Subpart Kb as they apply to the storage vessels 101-WWTP, 41-WWTP, ***2-34A,*** and 2-103, except as allowed under 40 CFR 63.640 (n)(8) for tank 2-103.

(a) The permittee shall meet all standards as specified in Subpart Kb §60.112b.

(b) The permittee shall meet all testing and procedural requirements as specified in Subpart Kb §60.113b.

(c) The permittee shall meet all reporting and recordkeeping requirements as specified in Subpart Kb §60.115b.

(d) The permittee shall meet all monitoring requirements as specified in Subpart Kb §60.116b.

(P60-Kb2) RECORDKEEPING [WAQSR Ch 5, Sec 2 (g)(ii) and (g)(v)]

(a) The permittee shall maintain records of the occurrence and duration of any start-up, shutdown, or malfunction in the operation of the affected tank or malfunction of the air pollution control equipment. These records shall be retained on-site at the facility for a period of at least five years from the date of such occurrences.

(b) The permittee shall maintain records of all measurements, reports, and other information required by the NSPS conditions of this permit recorded in a permanent form suitable for inspection. These records shall be retained on-site at the facility for a period of at least five years from the date such records are generated.

(P60-Kb3) GOOD AIR POLLUTION CONTROL PRACTICE [WAQSR Ch 5, Sec 2 (i)(iv)]

At all times, including periods of malfunction, the permittee shall, to the extent practicable, maintain and operate the air pollution control equipment in a manner consistent with good air pollution control practice for minimizing emissions.

40 CFR 61 NATIONAL EMISSION STANDARDS FOR HAZARDOUS AIR POLLUTANTS (NESHAP) SUBPART A AND SUBPART FF REQUIREMENTS

(Modified July 28, 2006)

(Subparts A and FF are provided in Appendix S)

(P61-FF1) ***SUBPART A REQUIREMENTS***

[WAQSR Ch 6, Sec 2 Permit MD-433A and 40 CFR 61 Subpart A, General Provisions]

The permittee shall meet all requirements of 40 CFR 61 Subpart A, General Provisions, as they apply to waste streams at hazardous waste treatment, storage, and disposal facilities at the refinery including, but not limited to, the following:

(a) ***The permittee shall not fail to report, revise reports, or report source test results as required under 40 CFR 61. [§61.05(d)]***

(b) ***Any change in the information provided under §61.10(a) shall be provided to the Administrator within 30 days after the change. [§61.10(c)]***

(c) ***The permittee shall operate and maintain the hazardous waste treatment, storage, and disposal facilities, including associated equipment for air pollution control, in a manner consistent with good air pollution control practice for minimizing emissions. [§61.12(c)]***

(P61-FF2) ***SUBPART FF REQUIREMENTS [40 CFR 61 Subpart FF, Benzene Waste Operations]***

The permittee shall meet all requirements of 40 CFR 61 Subpart FF, National Emission Standard for Benzene Waste Operations, as they apply to the hazardous waste treatment, storage, and disposal facilities including, but not limited to, the following:

(a) ***The permittee shall comply with the recordkeeping requirements of §61.356. These records shall be retained on-site at the facility for a period of at least five years from the date such records are generated.***

(b) ***The permittee shall comply with the reporting requirements of §61.357(b). Any reports shall be submitted to the Division and U.S. EPA in accordance with condition G4 of this permit.***

WAQSR CHAPTER 5, SECTION 3 NATIONAL EMISSION STANDARDS FOR HAZARDOUS AIR POLLUTANTS (NESHAPs) AND 40 CFR 63 SUBPART CC REQUIREMENTS

(40 CFR 63 Subpart CC is attached as Appendix G)

(P63-CC1) 40 CFR 63 SUBPART CC REQUIREMENTS ***(Modified July 28, 2006)***
[WAQSR Ch 5, Sec 3 (m) and 40 CFR 63 Subpart CC and W.S. 35-11-110]

The permittee shall meet all requirements of 40 CFR 63 Subpart CC and WAQSR Chapter 5, Section 3 as they apply to the affected sources at the Frontier Refinery. Affected units include process units, wastewater streams, miscellaneous process vents, storage vessels, equipment leaks, and gasoline loading racks as defined under 40 CFR 63.640 (a)(1) and (2). A Subpart CC equipment list ***describing applicable process vents, storage tanks, and facility wastewater streams***, as identified by Frontier, is included in Appendix H of this permit.

(a) The permittee shall meet all requirements of 40 CFR 63.643 through §63.645 as they apply the Group 1 miscellaneous process vents listed in Appendix H.

(b) The permittee shall meet all requirements of §63.646 as they apply to the Group 1 and Group 2 storage tanks listed in Appendix H of this permit.

(c) The permittee shall meet all requirements of §63.647 as they apply to all facility wastewater streams listed in Appendix H.

(d) The permittee shall meet all requirements of §63.648 as they apply to fugitive equipment leaks from the petroleum refining process units.

(e) The permittee shall meet all requirements of §63.650 as they apply to all units meeting the definition of gasoline loading rack. Additionally, the permittee shall conduct a yearly relative accuracy test audit, and quarterly cylinder gas audit on the vapor recovery unit continuous emission monitoring system. A Method 21 survey shall be conducted during the yearly audit for leak detection.

(f) The permittee shall meet all requirements of WAQSR Chapter 5, Section 3 (m) and 40 CFR 63 Subpart CC as they apply to the Plant #1 Flare and Plant #2 Flare. Flare testing, monitoring, recordkeeping, and reporting requirements are listed in the facility specific conditions of this operating permit.

(P63-CC2) OPERATION & MAINTENANCE REQUIREMENTS [WAQSR Ch 5, Sec 3 (h)(iv)(A)(I) and (II)]

(a) At all times, including periods of startup, shutdown, and malfunction, the permittee shall operate and maintain the affected sources, including associated air pollution control equipment, in a manner consistent with good air pollution control practices for minimizing emissions at least to the levels required by 40 CFR 63 Subpart CC.

(b) Malfunctions shall be corrected as soon as practicable after their occurrence in accordance with the startup, shutdown, and malfunction plan required in condition P63-CC3 of this permit.

(P63-CC3) STARTUP, SHUTDOWN, AND MALFUNCTION PLAN [WAQSR Ch 5, Sec 3 (h)(iv)(C)]

(a) The permittee shall develop and implement a written startup, shutdown, and malfunction plan that describes, in detail, procedures for operating and maintaining the affected sources during periods of startup, shutdown, and malfunction and a program of corrective action for malfunctioning process and air pollution control equipment used to comply with 40 CFR 63 Subpart CC. This plan shall be developed by the permittee by the source's compliance date for 40 CFR 63 Subpart CC. The plan is incorporated by reference into this permit.

(b) During periods of startup, shutdown, and malfunction, the permittee shall operate and maintain the affected sources (including associated air pollution control equipment) in accordance with the procedures specified in the startup, shutdown, and malfunction plan developed under paragraph (a) of this condition.

(c) When actions taken by the permittee during a startup, shutdown, or malfunction (including actions taken to correct a malfunction) are consistent with the procedures specified in the startup, shutdown, and malfunction plan, the permittee shall keep records for that event that demonstrate the procedures specified in the plan were followed. These records may take the form of a "checklist," or other effective form of recordkeeping, that confirms conformance with the startup, shutdown, and malfunction plan for that event.

(d) If an action taken by the permittee during a startup, shutdown, or malfunction (including an action taken to correct a malfunction) is not consistent with the procedures specified in the startup, shutdown, and malfunction plan, the permittee shall record the actions taken for that event.

(e) The permittee shall keep the written startup, shutdown, and malfunction plan on record after it is developed to be made available for inspection, upon request, by the Administrator for the life of each affected source or until the affected source is no longer subject to the provisions of Chapter 5, Section 3. In addition, if the startup, shutdown, and malfunction plan is revised, the permittee shall keep previous (i.e., superseded) versions of the startup, shutdown, and malfunction plan on record, to be made available for inspection, upon request, by the Administrator, for a period of 5 years after each revision to the plan.

(f) To satisfy the requirements of this condition to develop a startup, shutdown, and malfunction plan, the permittee may use an affected source's standard operating procedures (SOP) manual, or an Occupational Safety and Health Administration (OSHA) or other plan, provided the alternative plans meet all the requirements of Chapter 5, Section 3 and are made available for inspection when requested by the Administrator.

(g) If the startup, shutdown, and malfunction plan fails to address or inadequately addresses an event that meets the characteristics of a malfunction but was not included in the startup, shutdown, and malfunction plan at the time the permittee developed the plan, the permittee shall revise the startup, shutdown, and malfunction plan within 45 days after the event to include detailed procedures for operating and maintaining the source during similar malfunction events and a program of corrective action for similar malfunctions of process or air pollution control equipment.

(P63-CC4) RECORDKEEPING REQUIREMENTS [WAQSR Ch 5, Sec 3 (l)(ii)(B) and 40 CFR 63.642 (e)]

(a) The permittee shall maintain files of all information (including all reports and notifications) required by Chapter 5, Section 3 recorded in a form suitable and readily available for expeditious inspection and review. The files shall be retained for at least 5 years following the date of each occurrence, measurement, maintenance, corrective action, report, or record. At a minimum, the most recent 2 years of data shall be retained on site at the facility. The remaining 3 years of data may be retained off site. Such files may be maintained on microfilm, on a computer, on computer floppy disks, on magnetic tape disks, or on microfiche.

(b) The permittee shall maintain relevant records for each affected source of the following:

(i) The occurrence and duration of each startup, shutdown, or malfunction of operation (i.e., process equipment);

(ii) The occurrence and duration of each malfunction of the air pollution control equipment;

(iii) Actions taken during periods of startup, shutdown, and malfunction (including corrective actions to restore malfunctioning process and air pollution control equipment to its normal or usual manner of operation) when such actions are different from the procedures specified in the startup, shutdown, and malfunction plan;

(iv) All information necessary to demonstrate conformance with the startup, shutdown, and malfunction plan when all actions taken during periods of startup, shutdown, and malfunction (including corrective actions to restore malfunctioning process and air pollution control equipment to its normal or usual manner of operation) are consistent with the procedures specified in such plan. (The information needed to demonstrate conformance with the startup, shutdown, and malfunction plan may be recorded using a "checklist," or some other effective form of recordkeeping, to minimize the recordkeeping burden for conforming events);

(v) All CMS calibration checks;

(vi) All adjustments and maintenance performed on CMS;

(c) Recordkeeping for the continuous VOC emissions monitoring systems on the Loading Rack Vapor Recovery stack shall maintain the following additional records:

(i) All required continuous monitoring system measurements (including monitoring data recorded during unavoidable continuous monitoring system breakdowns and out-of-control periods);

(ii) The date and time identifying each period during which the continuous monitoring system was inoperative except for zero (low-level) and high-level checks;

(iii) The date and time identifying each period during which the continuous monitoring system was out of control, as defined in Chapter 5, Section 3 (j)(iii)(G);

(iv) The specific identification (i.e., the date and time of commencement and completion) of each period of excess emissions and parameter monitoring exceedances, as defined in the relevant standard(s), that occurs during startups, shutdowns, and malfunctions of the affected source;

(v) The specific identification (i.e., the date and time of commencement and completion) of each time period of excess emissions and parameter monitoring exceedances, as defined in the relevant standard(s), that occurs during periods other than startups, shutdowns, and malfunctions of the affected source;

(P63-CC5) NOTIFICATION REQUIREMENTS [WAQSR Ch 5, Sec 3 (k)(i)(C) and (k)(viii)(C)]

(a) The permittee shall submit notifications required under Chapter 5, Section 3 to the Administrator and U.S. EPA Region VIII in accordance with condition G4 of this permit.

(b) Each time a notification of compliance status is required under Chapter 5, Section 3, the permittee shall submit the notification of compliance status to the Administrator following completion of the relevant compliance demonstration activity specified in 40 CFR 63 Subpart CC.

(P63-CC6) GENERAL REPORTING REQUIREMENTS
[WAQSR Ch 5, Sec 3 (l)(i)(C), (l)(iv)(A), and (l)(iv)(E)]

(a) The permittee shall submit reports required under Chapter 5, Section 3 to the Administrator and U.S. EPA Region VIII in accordance with condition G4 of this permit.

(b) The permittee shall submit semiannual monitoring reports to the Administrator by March 1st and September 1st each year.

(c) Periodic startup, shutdown, and malfunction reports. If actions taken by the permittee during a startup, shutdown, or malfunction of an affected source (including actions taken to correct a malfunction) are consistent with the procedures specified in the source's startup, shutdown, and malfunction plan, the permittee shall state such information in a startup, shutdown, and malfunction report. Reports shall only be required if a startup, shutdown, or malfunction occurred during the reporting period. The startup, shutdown, and malfunction report shall consist of a letter, containing the name, title, and signature of the responsible official who is certifying its accuracy, that shall be submitted to the Administrator semiannually (or on a more frequent basis if specified otherwise in 40 CFR 63 Subpart CC). The startup, shutdown, and malfunction report shall be delivered or postmarked by the 30th day following the end of each calendar half (or other calendar reporting period, as appropriate).

WAQSR CHAPTER 5, SECTION 3 NATIONAL EMISSION STANDARDS FOR HAZARDOUS AIR POLLUTANTS (NESHAPS) SUBPART UUU REQUIREMENTS

(40 CFR 63, Subpart UUU is provided in Appendix I)

(P63-UUU1) SUBPART UUU REQUIREMENTS [40 CFR 63 Subpart UUU and WAQSR Ch 5, Sec 3(m)]

The permittee shall meet all requirements of 40 CFR 63 Subpart UUU as they apply to the fluid catalytic cracking unit, the catalytic reformer (platformer), the sulfur recovery units, and any bypass line(s) serving these units.

(a) (i) The permittee shall meet all standards specified in Subpart UUU § 63.1564 and § 63.1565 as they apply to the catalytic cracking unit.

(ii) The permittee shall meet all standards specified in Subpart UUU § 63.1566 and § 63.1567 as they apply to the catalytic reforming unit.

(iii) The permittee shall meet all standards specified in Subpart UUU § 63.1568 as they apply to the sulfur recovery units.

(iv) The permittee shall meet all standards specified in Subpart UUU § 63.1569 as they apply to any bypass line serving the catalytic cracking unit, the catalytic reformer, and the sulfur recovery units.

(b) The permittee shall meet all of the initial performance testing requirements or initial compliance demonstrations as specified in Subpart UUU § 63.1571 as they apply to the fluid catalytic cracking unit, the catalytic reformer (platformer), the sulfur recovery units, and any bypass line(s) serving these units.

(c) The permittee shall meet all the monitoring requirements specified in Subpart UUU § 63.1572 or § 63.1573 as they apply to the fluid catalytic cracking unit, the catalytic reformer (platformer), the sulfur recovery units, and any bypass line(s) serving these units.

(d) The permittee shall meet all the recordkeeping requirements specified in Subpart UUU §63.1576 as they apply to the fluid catalytic cracking unit, the catalytic reformer (platformer), the sulfur recovery units, and any bypass line(s) serving these units.

(e) The permittee shall meet all the notification and reporting requirements as specified in Subpart UUU § 63.1574 and § 63.1575 as they apply to the fluid catalytic cracking unit, the catalytic reformer (platformer), the sulfur recovery units, and any bypass line(s) serving these units.

(P63-UUU2) OPERATION & MAINTENANCE REQUIREMENTS [WAQSR Ch 5, Sec 3(h)(iv)(A)(I) and (II)]

(a) At all times, including periods of startup, shutdown, and malfunction, the permittee shall operate and maintain the affected sources, including associated air pollution control equipment, in a manner consistent with good air pollution control practices for minimizing emissions at least to the levels required by 40 CFR 63, Subpart UUU.

(b) Malfunctions shall be corrected as soon as practicable after their occurrence in accordance with the startup, shutdown, and malfunction plan required in condition P63-UUU3 of this permit.

(P63-UUU3) STARTUP, SHUTDOWN, & MALFUNCTION PLAN [WAQSR Ch 5, Sec 3(h)(iv)(C)]

(a) The permittee shall develop and implement a written startup, shutdown, and malfunction plan that describes, in detail, procedures for operating and maintaining the affected sources during periods of startup, shutdown, and malfunction and a program of corrective action for malfunctioning process and air pollution control equipment used to comply with 40 CFR 63, Subpart UUU. This plan shall be developed by the permittee by the source's compliance date for Subpart UUU. The plan shall be incorporated by reference into this permit.

(b) During periods of startup, shutdown, and malfunction, the permittee shall operate and maintain the affected sources (including associated air pollution control equipment) in accordance with the procedures specified in the startup, shutdown, and malfunction plan developed under paragraph (a) of this condition.

(c) When actions taken by the permittee during a startup, shutdown, or malfunction (including actions taken to correct a malfunction) are consistent with the procedures specified in the affected sources' startup, shutdown, and malfunction plan, the permittee shall keep records for that event that demonstrate the procedures specified in the plan were followed. These records may take the form of a "checklist," or other effective form of recordkeeping, that confirms conformance with the startup, shutdown, and malfunction plan for that event.

(d) If an action taken by the permittee during a startup, shutdown, or malfunction (including an action taken to correct a malfunction) is not consistent with the procedures specified in the affected sources' startup, shutdown, and malfunction plan, the permittee shall record the actions taken for that event.

(e) The permittee shall keep the written startup, shutdown, and malfunction plan on record after it is developed to be made available for inspection, upon request, by the Administrator for the life of the affected sources or until the affected sources are no longer subject to the provisions of Chapter 5, Section 3.

(f) To satisfy the requirements of this condition to develop a startup, shutdown, and malfunction plan, the permittee may use the affected source's standard operating procedures (SOP) manual, or an Occupational Safety and Health Administration (OSHA) or other plan, provided the alternative plans meet all the requirements of Chapter 5, Section 3 and are made available for inspection when requested by the Administrator.

(g) If the startup, shutdown, and malfunction plan fails to address or inadequately addresses an event that meets the characteristics of a malfunction but was not included in the startup, shutdown, and malfunction plan at the time the permittee developed the plan, the permittee shall revise the startup, shutdown, and malfunction plan within 45 days after the event to include detailed procedures for operating and maintaining the source during similar malfunction events and a program of corrective action for similar malfunctions of process or air pollution control equipment.

(P63-UUU4) GENERAL RECORDKEEPING REQUIREMENTS [WAQSR Ch 5, Sec 3(l)(ii)(A) and (B)]

(a) The permittee shall maintain files of all information (including all reports and notifications) required by Chapter 5, Section 3 recorded in a form suitable and readily available for expeditious inspection and review. The files shall be retained for at least 5 years following the date of each occurrence, measurement, maintenance, corrective action, report, or record. At a minimum, the most recent 2 years of data shall be retained on site at the facility. The remaining 3 years of data may be retained off site. Such files may be maintained on microfilm, on a computer, on computer floppy disks, on magnetic tape disks, or on microfiche.

(b) The permittee shall maintain relevant records for the affected sources of the following:

(i) The occurrence and duration of each startup, shutdown, or malfunction of operation (i.e., process equipment);

(ii) The occurrence and duration of each malfunction of the air pollution control equipment;

(iii) All maintenance performed on the air pollution control equipment;

(iv) Actions taken during periods of startup, shutdown, and malfunction (including corrective actions to restore malfunctioning process and air pollution control equipment to its normal or usual manner of operation) when such actions are different from the procedures specified in the affected source's startup, shutdown, and malfunction plan;

(v) All information necessary to demonstrate conformance with the affected source's startup, shutdown, and malfunction plan when all actions taken during periods of startup, shutdown, and malfunction (including corrective actions to restore malfunctioning process and air pollution control equipment to its normal or usual manner of operation) are consistent with the procedures specified in such plan. (The information needed to demonstrate conformance with the startup, shutdown, and malfunction plan may be recorded using a "checklist," or some other effective form of recordkeeping, to minimize the recordkeeping burden for conforming events);

(vi) Each period during which a continuous monitoring system is malfunctioning or inoperative (including out of control periods);

(vii) All required measurements needed to demonstrate compliance with 40 CFR 63, Subpart UUU;

(viii) All results of performance tests, continuous monitoring system performance evaluations, and opacity and visible emission observations;

(ix) All measurements as may be necessary to determine the conditions of performance tests and performance evaluations;

(x) All continuous monitoring system calibration checks;

(xi) All adjustments and maintenance performed on the continuous monitoring systems;

(xii) Any information demonstrating whether a source is meeting the requirements for a waiver of recordkeeping or reporting requirements, if a source has been granted a waiver under Chapter 5, Section 3 (l)(vi);

(xiii) All emission levels relative to the criterion for obtaining permission to use an alternative to the relative accuracy test, if the source has been granted such permission under Chapter 5, Section 3(j)(iv)(F);

(xiv) All documentation supporting initial notifications and notifications of compliance status under condition P63-UUU5 of this permit.

(P63-UUU5) NOTIFICATION REQUIREMENTS [WAQSR Ch 5, Sec 3(k)(i)(C) and (k)(viii)(C)]

(a) The permittee shall submit notifications required under Chapter 5, Section 3 to the Administrator and U.S. EPA Region VIII in accordance with condition G4 of this permit.

(b) Each time a notification of compliance status is required under Chapter 5, Section 3, the permittee shall submit the notification of compliance status to the Administrator following completion of the relevant compliance demonstration activity specified in 40 CFR 63, Subpart UUU.

(P63-UUU6) GENERAL REPORTING REQUIREMENTS [WAQSR Ch 5, Sec 3(l)(i)(C), (l)(iv)(A), and (l)(iv)(E)]

(a) The permittee shall submit reports required under Chapter 5, Section 3 to the Administrator and U.S. EPA Region VIII in accordance with condition G4 of this permit.

(b) The permittee shall submit reports to the Administrator in accordance with the reporting requirements in 40 CFR 63, Subpart UUU.

(c) Periodic startup, shutdown, and malfunction reports. If actions taken by the permittee during a startup, shutdown, or malfunction of the affected source (including actions taken to correct a malfunction) are consistent with the procedures specified in the source's startup, shutdown, and malfunction plan, the permittee shall state such information in a startup, shutdown, and malfunction report. Reports shall only be required if a startup, shutdown, or malfunction occurred during the reporting period. The startup, shutdown, and malfunction report shall consist of a letter, containing the name, title, and signature of the responsible official who is certifying its accuracy, that shall be submitted to the Administrator semiannually (or on a more frequent basis if specified otherwise in 40 CFR 63, Subpart UUU). The startup, shutdown, and malfunction report shall be delivered or postmarked by the 30th day following the end of each calendar half (or other calendar reporting period, as appropriate).

WAQSR CHAPTER 5, SECTION 3
NATIONAL EMISSION STANDARDS FOR HAZARDOUS AIR POLLUTANTS (NESHAPS)
40 CFR 63 SUBPART EEEE REQUIREMENTS

(Modified July 28, 2006)

(Subpart EEEE is provided in Appendix P)

(P63-EEEE1) ORGANIC LIQUID DISTRIBUTION REQUIREMENTS
[40 CFR 63 Subpart EEEE and WAQSR Ch 5, Sec 3]

The permittee shall meet all requirements of 40 CFR 63 Subpart EEEE and WAQSR Ch 5, Sec 3 as they apply to organic liquid distribution operations as described in §§63.2334 and 63.2406, according to the schedule in §63.2342. Under the subpart the affected source is defined as storage tanks storing organic liquids, transfer racks at which organic liquids are loaded or unloaded, equipment leak components in organic liquids service that are associated with pipelines (with exceptions noted), and transport vehicles loading and unloading organic liquids as specified in §63.2338.

(a) The permittee shall comply with the applicable emission limitations, operating limits, and work practice standards in §63.2346.

(b) The permittee shall comply with Subpart EEEE and other regulations that apply to the affected source as described in §63.2396.

(c) Performance tests shall be conducted as required by Ch 5, Sec 3 and §63.2354 to §63.2362.

(d) The permittee shall maintain files of all information (including all reports and notifications) required by Subpart EEEE and Chapter 5, Section 3 in a form suitable and readily available for expeditious inspection and review.

- ***(i) The files shall be retained for at least 5 years following the date of each occurrence, measurement, maintenance, corrective action, report, or record.***
- ***(ii) At a minimum, the most recent 2 years of data shall be retained on site at the facility. On-site records may be stored in electronic form at a separate location from the site provided they can be accessed and printed at the site within 1 hour after a request by the Division.***
- ***(iii) The remaining 3 years of data may be retained off site. Such files may be maintained on microfilm, on a computer, on computer floppy disks, on magnetic tape disks, or on microfiche.***

(e) The permittee shall submit notifications and reports required under Subpart EEEE and Chapter 5, Section 3 to the Administrator and U.S. EPA Region VIII in accordance with condition G4 of this permit.

WAQSR CHAPTER 5, SECTION 3
NATIONAL EMISSION STANDARDS FOR HAZARDOUS AIR POLLUTANTS (NESHAPS)
40 CFR 63 SUBPART ZZZZ REQUIREMENTS

(Modified July 28, 2006)
(Subpart ZZZZ is provided in Appendix Q)

(P63-ZZZZ1) EMISSION STANDARDS [40 CFR 63 Subpart ZZZZ and WAQSR Ch 5, Sec 3]

The permittee shall meet all requirements of 40 CFR 63 Subpart ZZZZ and WAQSR Ch 5, Sec 3 as they apply to reciprocating internal combustion engines (RICE), including the catalytically controlled four stroke rich burn 1232 HP Coker Compressor Engine (unit 47), the catalytically controlled four stroke rich burn 1000 HP Coker Compressor Engine (unit 48), and the 525 hp Caterpillar 3406E diesel backup air compressor engine (unit 79). (An affected source is any existing, new or reconstructed stationary RICE with a site-rating of more than 500 brake horsepower located at a major stationary source of HAP emissions as specified in §63.6590.)

(a) Each existing, new, or reconstructed spark ignition 4 stroke rich burn (4SRB) stationary RICE must comply with the emission limitations of Table 1a and the operating limitations of Table 1b of Subpart ZZZZ.

(b) Each new or reconstructed 2 stroke lean burn (2SLB) or 4 stroke lean burn (4SLB) stationary RICE or a new or reconstructed compression ignition (CI) stationary RICE must comply with the emission limitations of Table 2a and the operating limitations of Table 2b of Subpart ZZZZ.

(c) Each existing 2SLB stationary RICE, 4SLB stationary RICE, CI stationary RICE, emergency stationary RICE, or a limited use stationary RICE does not need to comply with the emission limitations in Table 1a and 2a or the operating limitations in Tables 1b and 2b in Subpart ZZZZ.

(P63-ZZZZ2) TESTING REQUIREMENTS [40 CFR 63 Subpart ZZZZ §§63.6610, 63.6615, 63.6620, 63.6630, and 63.6640; and WAQSR Ch 5, Sec 3(h) and (i)]

(a) The permittee shall demonstrate initial compliance with the emission standards in condition P63-ZZZZ1 according to Table 5 of Subpart ZZZZ, using the test methods and procedures in §63.6620 and WAQSR Ch 5, Sec 3(i). Performance tests shall be conducted in accordance with the timing requirements of §63.6610.

(b) During the initial performance test, the permittee shall establish the operating limitations in Tables 1b and 2b of Subpart ZZZZ that apply to each RICE. If the catalyst is changed, the permittee must reestablish the values of the operating parameters measured during the initial performance test, and conduct a new performance test to demonstrate the applicable emission limitation for that RICE is being met.

(c) For affected sources that must comply with emissions limitations under this subpart, subsequent performance tests shall be repeated as specified in Table 3 of Subpart ZZZZ.

(d) Performance testing shall meet all requirements for documentation, quality assurance, and other criteria in §63.6620 and WAQSR Ch 5, Sec 3(i).

(P63-ZZZZ3) MONITORING REQUIREMENTS
[40 CFR 63 Subpart ZZZZ §§63.6625, 63.6635, and 63.6640; and WAQSR Ch 5, Sec 3(j)]

(a) If the permittee elects to install a continuous emissions monitoring system (CEMS) or is required to install a continuous parameter monitoring system (CPMS) as specified in Table 5 of Subpart ZZZZ, the permittee shall meet all of the applicable monitoring requirements specified in§63.6625 and WAQSR Ch 5, Sec 3(j).

(b) The CEMS and CPMS described in paragraph (a) of this condition shall be installed, operational, and the data verified as specified in §63.6625 either prior to or in conjunction with conducting performance tests under condition P63-ZZZZ2. Verification of operational status shall, at a minimum, include completion of the manufacturer's written specifications or recommendations for installation, operation, and calibration of the system.

(c) Monitoring data from CEMS and CPMS shall be reduced in accordance with §63.6635(c) and Ch 5, Sec 3(j)(vii).

(d) The permittee shall demonstrate compliance with the limitations in Tables 1a, 1b, 2a, and 2b of Subpart ZZZZ that apply according to the methods specified in Table 6 of Subpart ZZZZ.

(P63-ZZZZ4) OPERATION & MAINTENANCE REQUIREMENTS [40 CFR 63 Subpart ZZZZ §§63.6605 and WAQSR Ch 5, Sec 3(h)(iv)(A)(I) and (II), Sec 3(i)(iii), and Sec 3(j)]

(a) At all times, including periods of startup, shutdown, and malfunction, the permittee shall operate and maintain the RICE, including associated air pollution control and monitoring equipment, in a manner consistent with good air pollution control practices for minimizing emissions.

(b) Malfunctions shall be corrected as soon as practicable after their occurrence in accordance with the startup, shutdown, and malfunction plan required in condition P63-ZZZZ5 of this permit.

(c) The permittee must keep the necessary parts for routine repairs of the CEMS and CPMS equipment readily available.

(d) Except for system breakdowns, out-of-control periods, repairs, maintenance periods, calibration checks, and zero (low-level) and high-level calibration drift adjustments, all CEMS and CPMS shall be in continuous operation. All continuous emission monitoring systems (CEMS) shall complete a minimum of one cycle of operation (sampling, analyzing, and data recording) for each successive 15-minute period.

(e) The permittee shall develop and implement a CMS (CEMS and CPMS) quality control program.

(i) The permittee shall develop, and upon request submit to the Administrator in accordance with condition G4, a site-specific performance evaluation test plan for approval upon request. The plan shall be developed according to the procedures in WAQSR Ch 5, Sec 3(i)(iii)(B) and 3(j)(v).

(ii) The performance evaluation test shall be conducted as described in Ch 5, Sec 3(j)(v)(D).

(iii) Each quality control program shall include, at a minimum, a written protocol that describes procedures for each of the following operations:

(A) Initial and any subsequent calibration of the CMS;

(B) Determination and adjustment of the calibration drift of the CMS;

(C) Preventive maintenance of the CMS, including spare parts inventory;

(D) Data recording, calculations, and reporting;

(E) Accuracy audit procedures, including sampling and analysis methods; and

(F) Program for corrective action for a malfunctioning CMS.

(iv) The permittee shall keep these written procedures on record to be made available for inspection, upon request, by the Administrator for the life of the RICE or until the Frontier Refinery is no longer subject to the provisions of Ch 5, Sec 3. In addition, if the quality control program is revised, the permittee shall keep previous (i.e., superseded) versions on record, to be made available for inspection, upon request, by the Administrator, for a period of 5 years after each revision to the plan.

(f) Additional CMS requirements are specified in Ch 5, Sec 3(j)(iii) and (iv).

(P63-ZZZZ5) STARTUP, SHUTDOWN, & MALFUNCTION PLAN [WAQSR Ch 5, Sec 3(h)(iv)(C)]

(a) The permittee shall maintain and implement a written startup, shutdown, and malfunction plan (SSMP) that describes, in detail, procedures for operating and maintaining the source during periods of startup, shutdown, and malfunction, and a program of corrective action for malfunctioning process and air pollution control equipment used to comply with Subpart ZZZZ. The plan shall identify all routine or otherwise predictable CMS malfunctions.

(b) During periods of startup, shutdown, and malfunction, the permittee shall operate and maintain RICE (including associated air pollution control equipment) in accordance with the procedures specified in the SSMP developed under paragraph (a) of this condition.

(c) When actions taken by the permittee during a startup, shutdown, or malfunction (including actions taken to correct a malfunction) are consistent with the procedures specified in the SSMP, the permittee shall keep records for that event that demonstrate the procedures specified in the plan were followed. These records may take the form of a "checklist," or other effective form of recordkeeping, that confirms conformance with the SSMP for that event.

(d) If an action taken by the permittee during a startup, shutdown, or malfunction (including an action taken to correct a malfunction) is not consistent with the procedures specified in the SSMP, the permittee shall record the actions taken for that event.

(e) The permittee shall keep the written SSMP on record to be made available for inspection, upon request, by the Administrator for the life of the RICE or until the Frontier Refinery is no longer subject to the provisions of Chapter 5, Section 3. In addition, if the SSMP is revised, the permittee

shall keep previous (i.e., superseded) versions of the SSMP on record, to be made available for inspection, upon request, by the Administrator, for a period of 5 years after each revision to the plan.

(f) To satisfy the requirements of this condition to develop a SSMP, the permittee may use their standard operating procedures (SOP) manual, or an Occupational Safety and Health Administration (OSHA) or other plan, provided the alternative plans meet all the requirements of Ch 5, Sec 3 and are made available for inspection when requested by the Administrator.

(g) If the SSMP fails to address or inadequately addresses an event that meets the characteristics of a malfunction but was not included in the SSMP at the time the permittee developed the plan, the permittee shall revise the SSMP within 45 days after the event to include detailed procedures for operating and maintaining the source during similar malfunction events and a program of corrective action for similar malfunctions of process or air pollution control equipment.

(P63-ZZZZ6) GENERAL RECORDKEEPING REQUIREMENTS

[40 CFR 63 Subpart ZZZZ §63.6655 and WAQSR Ch 5, Sec 3(l)(ii) and (iii)]

(a) The permittee shall maintain files of all information (including all reports and notifications) required by Subpart ZZZZ and Chapter 5, Section 3 recorded in a form suitable and readily available for expeditious inspection and review. The files shall be retained for at least 5 years following the date of each occurrence, measurement, maintenance, corrective action, report, or record. At a minimum, the most recent 2 years of data shall be retained on site at the facility. The remaining 3 years of data may be retained off site. Such files may be maintained on microfilm, on a computer, on computer floppy disks, on magnetic tape disks, or on microfiche.

(b) The permittee shall maintain relevant records for the RICE of the following:

(i) The occurrence and duration of each startup, shutdown, or malfunction of operation (i.e., process equipment);

(ii) The occurrence and duration of each malfunction of the air pollution control equipment;

(iii) All maintenance performed on the air pollution control equipment;

(iv) Actions taken during periods of startup, shutdown, and malfunction (including corrective actions to restore malfunctioning process and air pollution control equipment to its normal or usual manner of operation) when such actions are different from the procedures specified in the SSMP;

(v) All information necessary to demonstrate conformance with the SSMP when all actions taken during periods of startup, shutdown, and malfunction (including corrective actions to restore malfunctioning process and air pollution control equipment to its normal or usual manner of operation) are consistent with the procedures specified in such plan. (The information needed to demonstrate conformance with the SSMP may be recorded using a "checklist," or some other effective form of recordkeeping, to minimize the recordkeeping burden for conforming events);

(vi) Each period during which a CMS is malfunctioning or inoperable (including out-of-control periods).

(vii) All required measurements needed to demonstrate compliance with Subpart ZZZZ;

(viii) All results of performance tests and CMS performance evaluations;

(ix) All CMS calibration checks;

(x) All adjustments and maintenance performed on CMS;

(xi) All measurements as may be necessary to determine the conditions of performance tests and performance evaluations;

(xii) All documentation supporting initial notifications and notifications of compliance status under condition P63-ZZZZ7 of this permit;

(xiii) All records of applicability determination, including supporting analysis;

(xiv) All other records for CMS required by Ch, 5 Sec 3(l)(iii).

(xv) All other records required by Subpart ZZZZ §63.6655 and Ch 5, Sec 3.

(P63-ZZZZ7) NOTIFICATION REQUIREMENTS

[40 CFR 63 Subpart ZZZZ §63.6645 and §63.6650 and WAQSR Ch 5, Sec 3(h), (i), (j), and (k)]

(a) The permittee shall submit notifications required under this permit condition P63-ZZZZ7, Subpart ZZZZ, and Ch 5, Sec 3 to the Administrator and U.S. EPA Region VIII in accordance with condition G4 of this permit.

(b) The permittee shall notify the Administrator in writing of their intention to conduct any performance test required by condition P63-ZZZZ2 at least 60 calendar days before the performance test is scheduled to begin.

(c) The permittee shall notify the Administrator in writing of the date the CMS performance evaluation required by condition P63-ZZZZ4 is scheduled to begin, simultaneously with the notification of performance test date required by (b) above.

(d) The permittee shall, if requested, submit the site-specific performance evaluation test plan required by P63-ZZZZ4 simultaneously with the notification required by (b) above.

(e) The permittee shall submit a Notification of Compliance Status with Subpart ZZZZ upon completion of any performance testing specified in Table 3 of Subpart ZZZZ before the close of business on the 60th day following completion of the performance test.

(f) The permittee shall submit all other notifications as required by 40 CFR Subpart ZZZZ and WAQSR Ch 5, Sec 3.

(P63-ZZZZ8) REPORTING REQUIREMENTS

[40 CFR 63 Subpart ZZZZ and WAQSR Ch 5, Sec 3(j) and Sec 3(l)(i), (iv), and (v)]

(a) The permittee shall submit reports required under this permit condition P63-ZZZZ8, Subpart ZZZZ §63.6650, and Ch 5, Sec 3 to the Administrator and U.S. EPA Region VIII in accordance with condition G4 of this permit.

(b) The results of any performance test required under condition P63-ZZZZ2 shall be reported within 60 days of completing the test. The report shall include the information required by Subpart ZZZZ §63.6650.

(c) For the CMS required by condition P63-ZZZZ3, a written report of the results of the performance evaluation conducted under condition P63-ZZZZ4 shall be submitted to the Administrator simultaneously with the performance test results required under paragraph (b) above.

(d) The permittee shall initial and semiannual Compliance reports in accordance with the schedule in §63.6650(b). Each report shall include:

(i) All exceedances of limitations specified in P63-ZZZZ1.

(ii) If a startup, shutdown, or malfunction of the affected source occurred during the reporting period and actions taken by the permittee during the startup, shutdown, or malfunction (including actions taken to correct a malfunction) are consistent with the procedures specified in the source's SSMP, the permittee shall state such information in a startup, shutdown, and malfunction report. The report shall consist of a letter, containing the name, title, and signature of the responsible official who is certifying its accuracy.

(iii) Information required by Table 7 of Subpart ZZZZ and §63.6650(c) through (g).

(iv) All other information listed in WAQSR Ch 5, Sec 3(l)(v)(C)(VI).

(e) If the total duration of CMS exceedances for a calendar quarter is 1 percent or greater of the total operating time for that quarter, or the CMS downtime for the quarter is 5 percent or greater of the total operating time for that quarter, then the permittee shall submit a Supplemental Excess Emission and CMS Performance report. This report shall be postmarked or delivered within 30 days of the end of the calendar quarter and shall include the following:

(i) Information required by WAQSR Ch 5, Sec 3(l)(iii)(B) through (I);

(ii) Information required by WAQSR Ch 5, Sec 3(j)(iii)(G) and (H); and

(iii) The name, title, and signature of the responsible official who is certifying the accuracy of the report.

(f) Immediate startup, shutdown, and malfunction reports:

(i) Any time an action taken by a permittee during a startup, shutdown, or malfunction is not consistent with the procedures in the SSMP, the permittee shall make a report of the actions taken for the event by telephone call or facsimile (FAX) transmission within 2 working days after starting actions inconsistent with the plan. The immediate report shall be followed by a letter, delivered or postmarked within 7 working days after the end of the event, that contains the name, title, and signature of the responsible official who is certifying its accuracy, explaining the circumstances of the event, the reasons for not following the startup, shutdown, and malfunction plan, and whether any excess emissions and/or parameter monitoring exceedances are believed to have occurred.

(ii) For those malfunctions and or other events that affect the CMS and are not addressed by the SSMP, the permittee shall send a follow-up report within 2 weeks after commencing actions

inconsistent with the plan that either certifies that corrections have been made or includes a corrective action plan and schedule. The permittee shall provide proof that repair parts have been ordered or any other records that would indicate that the delay in making repairs is beyond their control.

(g) The permittee shall submit all other reports as required by Table 7 of Subpart ZZZZ, §63.6650, and Ch 5, Sec 3.

WAQSR CHAPTER 5, SECTION 3
NATIONAL EMISSION STANDARDS FOR HAZARDOUS AIR POLLUTANTS (NESHAPS)
40 CFR 63 SUBPART DDDDD REQUIREMENTS
(Modified July 28, 2006)
(Subpart DDDDD is provided in Appendix R)

(P63-DDDDD1) ***EMISSION STANDARDS [40 CFR 63 Subpart DDDDD and WAQSR Ch 5, Sec 3]***

The permittee shall meet all requirements of 40 CFR 63 Subpart DDDDD and WAQSR Ch 5, Sec 3 as they apply to each affected source as indicated in §63.7490. The affected source is the collection of industrial, commercial and institutional boilers and process heaters as defined in §§63.7490 and 63.7575.

- ***(a) Boilers and process heaters listed in §63.7491 are not subject to Subpart DDDDD.***
- ***(b) The following affected units do not have to meet the requirements of Subpart DDDDD and of 40 CFR Part 63, Subpart A:***
  - ***(i) Existing small units.***
  - ***(ii) New or reconstructed small gaseous fired units.***
  - ***(iii) "Small" units are those with a rated capacity less than or equal to 10 MMBtu per hour heat input.***
- ***(c) The following affected units are subject to only the Initial Notification requirements set forth in §63.7545 and Ch 5, Sec 3(k)(ii):***
  - ***(i) Existing large and limited use gaseous and liquid fuel units.***
  - ***(ii) New or reconstructed small liquid fuel units that burn only gaseous fuels or distillate oil.***
- ***(d) New or reconstructed liquid fuel boilers may be subject to limited requirements as specified in §63.7506(a).***
- ***(e) All other affected boilers and process heaters shall meet the applicable emission limits, work practice standards, and operating limits described in §§63.7500, 63.7507, and 63.7522.***

(P63-DDDDD2) ***TESTING, FUEL ANALYSIS, AND INITIAL COMPLIANCE DEMONSTRATION [40 CFR 63 Subpart DDDDD §§63.7505 through 63.7530 and WAQSR Ch 5, Sec 3(h) and (i)]***

- ***(a) The permittee shall demonstrate initial compliance with the requirements in condition P63-DDDDD1 using the test methods and procedures in §§63.7507, 63.7510, 63.7530, 63.7520, 63.7521, and 63.7522, as applicable.***
- ***(b) Subsequent performance testing and fuel analysis shall meet the requirements in §§63.7515, 63.7520, and 63.7521.***
- ***(c) The permittee may demonstrate compliance with any applicable emission limit using fuel analysis if the emission rate calculated according to §63.7530(d) is less than the applicable emission limit.***
- ***(d) Performance testing and fuel analysis shall meet all requirements for documentation, quality assurance, and other criteria in Subpart DDDDD and WAQSR Ch 5, Sec 3(h)(vii) and Sec 3(i) except as specified in Table 10 to Subpart DDDDD.***

(P63-DDDDD3) ***MONITORING REQUIREMENTS [40 CFR 63 Subpart DDDDD §§63.7505, 63.7525, and 63.7535 through 63.7541; and WAQSR Ch 5, Sec 3(j)]***

- ***(a) If the permittee demonstrates compliance with any applicable emission limit through performance testing, the permittee must develop a site-specific monitoring plan according to the requirements in §63.7505(d).***
- ***(b) Any continuous opacity monitors (COMs) and continuous monitoring systems (CMSs) required by Subpart DDDDD shall be installed, operational, and the data verified either prior to or in conjunction with conducting performance tests under condition P63-DDDDD2. Verification of operational status shall, at a minimum, include completion of the manufacturer's written specifications or recommendations for installation, operation, and calibration of the system.***
- ***(c) Monitoring data from COMs and CMSs shall be reduced in accordance with Ch 5, Sec 3(j)(vii)(A) through (D) and §63.7535(c).***
- ***(d) The permittee shall meet all other applicable monitoring requirements as specified in §§63.7505, 63.7525, and 63.7535 through 63.7541 and WAQSR Ch 5, Sec 3(j), except as specified in Table 10 to Subpart DDDDD.***

(P63-DDDDD4) OPERATION & MAINTENANCE REQUIREMENTS [40 CFR 63 Subpart DDDDD §§63.7505 and 63.7535; and WAQSR Ch 5, Sec 3(h)(iv)(A)(I) and (II), Sec 3(i)(iii), and Sec 3(j)]

(a) At all times, including periods of startup, shutdown, and malfunction, the permittee shall operate and maintain affected boilers and process heaters, including associated air pollution control equipment, in a manner consistent with good air pollution control practices for minimizing emissions at least to the levels required by Subpart DDDDD.

(b) Malfunctions shall be corrected as soon as practicable after their occurrence in accordance with the startup, shutdown, and malfunction plan required in condition P63-DDDDD5 of this permit.

(c) The permittee must keep the necessary parts for routine repairs of the COM and CMS equipment readily available.

(d) Except for monitor malfunctions, associated repairs, and required quality assurance or control activities, (including, as applicable, calibration checks and required zero and span adjustments), the permittee must monitor continuously (or collect data at all required intervals) at all times that the affected source is operating.

(e) All COMs required by Subpart DDDDD shall complete a minimum of one cycle of sampling and analyzing for each successive ten-second period and one cycle of data recording for each successive six-minute period.

(f) The permittee shall develop and implement a COM and CMS quality control program.

(i) The permittee shall develop, and upon request submit to the Administrator in accordance with condition G4, a site-specific performance evaluation test plan for approval upon request. The plan shall be developed according to the procedures in WAQSR Ch 5 Sec 3(i)(iii)(B) and 3(j)(v).

(ii) The performance evaluation test shall be conducted as described in Ch 5 Sec 3(j)(v)(D).

(iii) Each quality control program shall include, at a minimum, a written protocol that describes procedures for each of the following operations:

(A) Initial and any subsequent calibration of the CMS/COM;

(B) Determination and adjustment of the calibration drift of the CMS/COM;

(C) Preventive maintenance of the CMS/COM, including spare parts inventory;

(D) Data recording, calculations, and reporting;

(E) Accuracy audit procedures, including sampling and analysis methods; and

(F) Program for corrective action for a malfunctioning CMS/COM.

(iv) The permittee shall keep these written procedures on record to be made available for inspection, upon request, by the Administrator for the life of the Cheyenne Refinery or until the Cheyenne Refinery is no longer subject to Ch 5 Sec 3. In addition, if the quality control program is revised, the permittee shall keep previous (i.e., superseded) versions on record, to be made available for inspection, upon request, by the Administrator, for a period of 5 years after each revision to the plan.

(g) Additional COM and CMS requirements are specified in Ch 5 Sec 3(j)(iii) and (iv), except as specified in Table 10 to Subpart DDDDD.

(P63-DDDDD5) STARTUP, SHUTDOWN, & MALFUNCTION PLAN [40 CFR 63 Subpart DDDDD §§63.7505 and WAQSR Ch 5, Sec 3(h)(iv)(C)]

(a) If the permittee has an applicable emission limit or work practice standard under Subpart DDDDD, then the permittee shall maintain and implement a written startup, shutdown, and malfunction plan (SSMP) that describes, in detail, procedures for operating and maintaining the source during periods of startup, shutdown, and malfunction, and a program of corrective action for malfunctioning process and air pollution control equipment used to comply with Subpart DDDDD. The plan shall identify all routine or otherwise predictable COM and CMS malfunctions.

(b) During periods of startup, shutdown, and malfunction, the permittee shall operate and maintain affected boilers and process heaters (including associated air pollution control equipment) in accordance with the procedures specified in the SSMP developed under paragraph (a) of this condition.

(c) When actions taken by the permittee during a startup, shutdown, or malfunction (including actions taken to correct a malfunction) are consistent with the procedures specified in the SSMP, the permittee shall keep records for that event that demonstrate the procedures specified in the plan were followed. These records may take the form of a "checklist," or other effective form of recordkeeping, that confirms conformance with the SSMP for that event.

(d) *If an action taken by the permittee during a startup, shutdown, or malfunction (including an action taken to correct a malfunction) is not consistent with the procedures specified in the SSMP, the permittee shall record the actions taken for that event.*

(e) *The permittee shall keep the written SSMP on record to be made available for inspection, upon request, by the Administrator for the life of the Cheyenne Refinery or until the Cheyenne Refinery is no longer subject to the provisions of Chapter 5, Section 3. In addition, if the SSMP is revised, the permittee shall keep previous (i.e., superseded) versions of the SSMP on record, to be made available for inspection, upon request, by the Administrator, for a period of 5 years after each revision to the plan.*

(f) *To satisfy the requirements of this condition to develop a SSMP, the permittee may use their standard operating procedures (SOP) manual, or an Occupational Safety and Health Administration (OSHA) or other plan, provided the alternative plans meet all the requirements of Chapter 5, Section 3 and are made available for inspection when requested by the Administrator.*

(g) *If the SSMP fails to address or inadequately addresses an event that meets the characteristics of a malfunction but was not included in the SSMP at the time the permittee developed the plan, the permittee shall revise the SSMP within 45 days after the event to include detailed procedures for operating and maintaining the source during similar malfunction events and a program of corrective action for similar malfunctions of process or air pollution control equipment.*

(P63-DDDDD6) *GENERAL RECORDKEEPING REQUIREMENTS*

[40 CFR 63 Subpart DDDDD §§63.7555 and 63.7560; and WAQSR Ch 5, Sec 3(l)(ii) and (iii)]

(a) *The permittee shall maintain files of all information (including all reports and notifications) required by Subpart DDDDD and Chapter 5, Section 3 recorded in a form suitable and readily available for expeditious inspection and review. The files shall be retained for at least 5 years following the date of each occurrence, measurement, maintenance, corrective action, report, or record. At a minimum, the most recent 2 years of data shall be retained on site at the facility. The remaining 3 years of data may be retained off site. Such files may be maintained on microfilm, on a computer, on computer floppy disks, on magnetic tape disks, or on microfiche.*

(b) *The permittee shall maintain relevant records for affected boilers and process heaters of the following:*

- *(i)* *The occurrence and duration of each startup, shutdown, or malfunction of operation (i.e., process equipment);*
- *(ii)* *The occurrence and duration of each malfunction of the air pollution control equipment;*
- *(iii)* *All maintenance performed on the air pollution control equipment;*
- *(iv)* *Actions taken during periods of startup, shutdown, and malfunction (including corrective actions to restore malfunctioning process and air pollution control equipment to its normal or usual manner of operation) when such actions are different from the procedures specified in the SSMP;*
- *(v)* *All information necessary to demonstrate conformance with the SSMP when all actions taken during periods of startup, shutdown, and malfunction (including corrective actions to restore malfunctioning process and air pollution control equipment to its normal or usual manner of operation) are consistent with the procedures specified in such plan. (The information needed to demonstrate conformance with the SSMP may be recorded using a "checklist," or some other effective form of recordkeeping, to minimize the recordkeeping burden for conforming events);*
- *(vi)* *Each period during which a COM or CMS is malfunctioning or inoperable (including out-of-control periods).*
- *(vii)* *All required measurements needed to demonstrate compliance with Subpart DDDDD;*
- *(viii)* *All results of performance tests, fuel analyses, other compliance demonstrations, COM or CMS performance evaluations, and opacity and visible emission observations;*
- *(ix)* *All COM and CMS calibration checks;*
- *(x)* *All adjustments and maintenance performed on COMs and CMSs;*
- *(xi)* *All measurements as may be necessary to determine the conditions of performance tests and performance evaluations;*
- *(xii)* *A copy of each notification and report that the permittee submitted to comply with Subpart DDDDD;*
- *(xiii)* *All records of applicability determination, including supporting analysis;*

(xiv) All other records for COMs and CMSs required by Ch 5 Sec 3(l)(iii).

(xv) All other records required by §63.7555 and Chapter 5, Section 3, except as specified in Table 10 to Subpart DDDDD.

(P63-DDDDD7) NOTIFICATION REQUIREMENTS

[40 CFR 63 Subpart DDDDD §63.7545 and WAQSR Ch 5, Sec 3(h), (i), (j), and (k)]

(a) The permittee shall submit notifications required under this permit condition P63-DDDDD7, Subpart DDDDD, and Chapter 5, Section 3 to the Administrator and U.S. EPA Region VIII in accordance with condition G4 of this permit.

(b) The permittee shall notify the Administrator in writing of their intention to conduct any performance test required by condition P63-DDDDD2 at least 30 calendar days before the performance test is scheduled to begin.

(c) The permittee shall notify the Administrator in writing of the date the performance evaluation required by condition P63-DDDDD4(e) is scheduled to begin, simultaneously with the notification of performance test date required by (b) above.

(d) The permittee shall, if requested, submit the site-specific performance evaluation test plan required by P63-DDDDD4(e) simultaneously with the notification required by (b) above.

(e) The permittee shall submit a report of the results of a CMS performance evaluation as follows:

(i) For any COMs required by condition P63-DDDDD3, two copies of the written report of the COM performance evaluation conducted under condition P63-DDDDD4(e) shall be submitted to the Administrator at least 15 days before any COMS performance test required under condition P63-DDDDD2.

(ii) For any CMS required by condition P63-DDDDD3, a written report of the results of the performance evaluation conducted under condition P63-DDDDD4(e) shall be submitted to the Administrator simultaneously with the performance test results required under paragraph (f) below.

(f) The permittee shall submit a Notification of Compliance Status with Subpart DDDDD upon completion of any relevant initial compliance demonstration activity, including all performance test results and fuel analyses, before the close of business on the 60th day following completion of the compliance demonstration.

(i) The Notification of Compliance Status shall contain all the information specified in §63.7545(e), as applicable.

(ii) For performance tests, the Notification of Compliance Status shall include COM data produced during the performance test, if the source tested is required to use a COM.

(g) The permittee shall submit all other notifications as required by 40 CFR Subpart DDDDD and WAQSR Ch 5 Sec 3.

(P63-DDDDD8) REPORTING REQUIREMENTS

[40 CFR 63 Subpart DDDDD §63.7550 and WAQSR Ch 5, Sec 3(j) and Sec 3(l)(i), (iv), and (v)]

(a) The permittee shall submit reports required under this permit condition P63-DDDDD8, §63.7550, and Chapter 5, Section 3 to the Administrator and U.S. EPA Region VIII in accordance with condition G4 of this permit.

(b) The permittee shall submit each report in Table 9 of Subpart DDDDD that applies, according to the timing requirements in §63.7550(b).

(i) Initial and semiannual compliance reports shall contain the information required by Table 9 and §63.7550(c) through (f).

(ii) If actions taken by the permittee during a startup, shutdown, or malfunction of affected boilers or process heaters (including actions taken to correct a malfunction) are consistent with the procedures specified in the source's SSMP, the permittee shall state such information in a startup, shutdown, and malfunction report. Reports shall only be required if a startup, shutdown, or malfunction occurred during the reporting period. The startup, shutdown, and malfunction report shall consist of a letter, containing the name, title, and signature of the responsible official who is certifying its accuracy, which shall be submitted to the Administrator semiannually. The startup, shutdown, and malfunction report shall be submitted simultaneously with the compliance reports.

(iii) ***Immediate startup, shutdown, and malfunction reports:***

(A) ***Any time an action taken by a permittee during a startup, shutdown, or malfunction is not consistent with the procedures in the SSMP, the permittee shall make a report of the actions taken for the event by telephone call or facsimile (FAX) transmission within 2 working days after starting actions inconsistent with the plan. The immediate report shall be followed by a letter, delivered or postmarked within 7 working days after the end of the event, that contains the name, title, and signature of the responsible official who is certifying its accuracy, explaining the circumstances of the event, the reasons for not following the startup, shutdown, and malfunction plan, and whether any excess emissions and/or parameter monitoring exceedances are believed to have occurred.***

(B) ***For those malfunctions and or other events that affect a CMS/COM and are not addressed by the SSMP, the permittee shall send a follow-up report within 2 weeks after commencing actions inconsistent with the plan that either certifies that corrections have been made or includes a corrective action plan and schedule. The permittee shall provide proof that repair parts have been ordered or any other records that would indicate that the delay in making repairs is beyond their control.***

(c) ***The permittee shall submit all other reports as required by §63.7550 and Chapter 5, Section 3.***

COMPLIANCE CERTIFICATION AND SCHEDULE

Compliance Certification [WAQSR Ch 6, Sec 3 (h)(iii)(E)] *(Modified November 26, 2003)**(Modified July 28, 2006)***

(C1) (a) The permittee shall submit by January 31 each year a certification addressing compliance with the requirements of this permit. The certification shall be submitted as a stand-alone document separate from any monitoring reports required under this permit.

(b) (i) For fugitive emissions from the petroleum coke stockpile, the permittee shall assess compliance with condition F2 of this permit by conducting monitoring required by condition F1 and by reviewing records kept in accordance with condition F29.

(ii) For visible emissions from the FCCU Regenerator, the Sulfur Incinerator, ***the Porter Draw Diesel Water Pump Engine, and the Caterpillar 3406E diesel backup air compressor engine*** the permittee shall assess compliance with condition F3 of this permit by conducting monitoring required by condition F19.

(iii) For visible emissions from the Plant #1 Flare and Plant #2 Flare the permittee shall assess compliance with condition F3 and F9 (d) of this permit by conducting monitoring required by condition F19.

(iv) For visible emissions from the gas fired units of Table I of this permit, the permittee shall assess compliance with condition F3 of this permit by ensuring gas is the sole fuel source for these units.

(v) For SO_2 emissions from the coker flare, the permittee shall assess compliance with condition F5 of this permit by conducting the monitoring specified by condition ***F21***.

(vi) For SO_2 emissions from the Fluid Catalytic Cracking Unit Regenerator, the permittee shall assess compliance with condition F5 of this permit by conducting the monitoring required under condition F21.

(vii) For SO_2 emissions from the heaters, boilers, and compressor engines listed in Table I of this permit, the permittee shall assess compliance with condition F5 of this permit by conducting the monitoring required under condition F21.

(viii) For H_2S content of the fuel gas, the permittee shall assess compliance with conditions F5 and P60-J1 of this permit by conducting monitoring required by conditions F21 and P60-J1.

(ix) For SO_2 emissions from the Sulfur Incinerator, the permittee shall assess compliance with conditions F5 and P60-J1 of this permit by conducting monitoring required by conditions F21 and P60-J1.

(x) For particulate emissions from the FCCU Regenerator, the permittee shall assess compliance with condition F6 of this permit by conducting testing required by condition F14.

(xi) For NO_X emissions from the Fluid Catalytic Cracking Unit Regenerator, the permittee shall assess compliance with condition F7 of this permit by conducting the monitoring required under condition F23.

(xii) For NO_X emissions from the Indeck boilers, the permittee shall assess compliance with condition F7 of this permit by conducting monitoring required by condition F23 and P60-Db1.

(xiii) For NO_X emissions from the compressor engines, the CO Boiler, the Reformer #1, the Alky Iso-Stripper Reboiler, the Hydrogen Plant Reformer, *and the Crude Charge Heater* the permittee shall assess compliance with condition F7 of this permit by conducting testing required by conditions F15 and F23.

(xiv) For NO_X emissions from the sources listed in condition F23 (d) of this permit, the permittee shall assess compliance with condition F7 of this permit by reviewing the records kept in accordance with condition F33.

(xv) For CO emissions from the CO Boiler, the compressor engines, *and the Crude Charge Heater*, the permittee shall assess compliance with condition F8 of this permit by conducting testing required by condition F16.

(xvi) ***For CO emissions from the FCCU regenerator, the permittee shall assess compliance with condition F8 of this permit by conducting monitoring required by condition F24.***

(xvii) For the contingency sulfur operational plan, the permittee shall assess compliance with condition F9 of this permit by reviewing records kept in accordance with condition F33.

(xviii) For the wastewater system, the permittee shall assess compliance with condition F9 of this permit by conducting monitoring required by condition F26 and reviewing records kept in accordance with condition F33.

(xix) For the Waste Heat Exchanger on the FCCU, the permittee shall assess compliance with condition F9 by reviewing records kept in accordance with condition F33.

(xx) ***For the maintenance and hours of operation limitations of the Porter Draw Diesel Water Pump Engine and the Caterpillar 3406E diesel backup air compressor engine, the permittee shall assess compliance with condition F9 of this permit by reviewing records kept in association with condition F33.***

(xxi) For the major equipment process rates, the permittee shall assess compliance with condition F10 of this permit by conducting monitoring required by condition F25.

(xxii) ***For the annual VOC emissions from the Truck Loading Rack, the permittee shall assess compliance with condition F11 of this permit by conducting the monitoring required by condition F27.***

(xxiii) For the fuel meters on the Indeck Boilers, Gas Con Reboiler, and Alky Iso-Stripper Reboiler, the permittee shall assess compliance with condition F20 of this permit by reviewing records kept required by condition F30.

(xxiv) For ambient SO_2 and meteorological monitoring, the permittee shall assess compliance with condition F28 of this permit by reviewing records kept in accordance with condition F36.

(xxv) The permittee shall assess compliance with condition ODOR-1 of this permit by conducting monitoring, inspections, and maintenance required by conditions ODOR-1 and ODOR-2 and reviewing records kept in accordance with condition ODOR-3.

(xxvi) The permittee shall assess compliance with condition P60-J1(a) of this permit by conducting monitoring required by condition P60-J1(b).

(xxvii) The permittee shall assess compliance with the standards in condition P60-GGG1 of this permit by conducting testing and monitoring required by condition P60-GGG1(a).

(xxviii) The permittee shall assess compliance with condition P60-QQQ1(a) of this permit by conducting testing and monitoring required by conditions P60-QQQ1(b) and (c).

(xxix) The permittee shall assess compliance with condition P60-Db1(a)(i) of this permit by conducting monitoring required by condition P60-Db1(a)(ii) and (b).

(xxx) The permittee shall assess compliance with condition P60-Ka1(a) of this permit by conducting monitoring required by P60-Ka1(b) and (c).

(xxxi) The permittee shall assess compliance with condition P60-Kb1(a) of this permit by conducting monitoring required by P60-Kb1(b) and (d).

(xxxii) ***For HAP emissions from hazardous waste treatment, storage, and disposal facilities, the permittee shall assess compliance with condition P61-FF1 and P61-FF2 of this permit by maintaining the facilities as required by condition P61-FF1 and reviewing the records kept in accordance with condition F61-FF2.***

(xxxiii) The permittee shall assess compliance with condition P63-CC1 by conducting monitoring and reviewing records kept in accordance with 40 CFR 60 Subpart CC and conditions P63-CC1 through P63-CC6.

(xxxiv) The permittee shall assess compliance with condition P63-UUU1 by conducting monitoring and reviewing records kept in accordance with 40 CFR 60 Subpart UUU and conditions P63-UUU1 through P63-UUU6.

(xxxv) ***For HAP emissions from organic liquid distribution operations, the permittee shall assess compliance with condition P63-EEE1 of this permit by conducting the testing and monitoring required by condition P63-EEEE1, and reviewing the records kept in accordance with condition P63-EEEE1.***

(xxxvi) ***For HAP emissions from RICE, the permittee shall assess compliance with condition P63-ZZZZ1 of this permit by conducting the testing and monitoring required by conditions P63-ZZZZ2 and P63-ZZZZ3, and reviewing the records kept in accordance with condition P63-ZZZZ6.***

(xxxvii) ***For HAP emissions from boilers and process heaters, the permittee shall assess compliance with condition P63-DDDDD1 of this permit by conducting the testing and monitoring required by conditions P63-DDDDD2 and P63-DDDDD3, and reviewing the records required by condition P63-DDDDD6.***

(c) The compliance certification shall include:
  (i) The permit condition or applicable requirement that is the basis of the certification;
  (ii) The current compliance status;
  (iii) Whether compliance was continuous or intermittent; and
  (iv) The methods used for determining compliance.

(d) For any permit conditions or applicable requirements for which the source is not in compliance, the permittee shall submit with the compliance certification a proposed compliance plan and schedule for Division approval.

(e) The compliance certification shall be submitted to the Division in accordance with condition G4 of this permit and to the Assistant Regional Administrator, Office of Enforcement, Compliance, and Environmental Justice (8ENF-T), U.S. EPA - Region VIII, One Denver Place, 999 18th Street - Suite 300, Denver, CO 80202-2466.

(f) Determinations of compliance or violations of this permit are not restricted to the monitoring requirements listed in paragraph (b) of this condition; other credible evidence may be used.

Compliance Schedule [WAQSR Ch 6, Sec 2 Permit MD-238 and Ch 6, Sec 3 (h)(iii)(C)]

(C2) The permittee shall continue to comply with the applicable requirements with which the permittee has certified that it is already in compliance.

(C3) The permittee shall comply in a timely manner with applicable requirements that become effective during the term of this permit.

GENERAL PERMIT CONDITIONS

Powers of the Administrator: [W.S. 35-11-110]

(G1) (a) The Administrator may require the owner or operator of any point source to complete plans and specifications for any application for a permit required by the Wyoming Environmental Quality Act or regulations made pursuant thereto and require the submission of such reports regarding actual or potential violations of the Wyoming Environmental Quality Act or regulations thereunder.

(b) The Administrator may require the owner or operator of any point source to establish and maintain records; make reports; install, use and maintain monitoring equipment or methods; sample emissions, or provide such other information as may be reasonably required and specified.

Permit Renewal and Expiration: [WAQSR Ch 6, Sec 3 (c)(i)(C), (d)(ii), (d)(iv)(B), and (h)(i)(B)] [W.S. 35-11-206 (f)]

(G2) This permit is issued for a fixed term of five years. Permit expiration terminates the permittee's right to operate unless a timely and complete renewal application is submitted at least six months prior to the date of permit expiration. If the permittee submits a timely and complete application for renewal, the permittee's failure to have an operating permit is not a violation of WAQSR Chapter 6, Section 3 until the Division takes final action on the renewal application. This protection shall cease to apply after a completeness determination if the applicant fails to submit by the deadline specified in writing by the Division any additional information identified as being needed to process the application.

Duty to Supplement: [WAQSR Ch 6, Sec 3 (c)(iii)]

(G3) The permittee, upon becoming aware that any relevant facts were omitted or incorrect information was submitted in the permit application, shall promptly submit such supplementary facts or corrected information. The permittee shall also provide additional information as necessary to address any requirements that become applicable to the facility after this permit is issued.

Submissions: [WAQSR Ch 6, Sec 3 (c)(iv)] [W.S. 35-11-206 (c)]

(G4) Any document submitted shall be certified as being true, accurate, and complete by a responsible official.

(a) Submissions to the Division.

(i) Any submissions to the Division including reports, certifications, and emission inventories required under this permit shall be submitted as separate, stand-alone documents and shall be sent to:

Administrator, Air Quality Division
122 West 25th Street
Cheyenne, Wyoming 82002

(ii) A copy of each submission to the Administrator under paragraph (a)(i) of this condition shall be sent to the DEQ Air Quality Contact listed on page 3 of this permit.

(b) Submissions to EPA.

(i) Each certification required under condition C1 of this permit shall also be sent to:

Assistant Regional Administrator
Office of Enforcement, Compliance, and Environmental Justice (8ENF-T)
U.S. EPA - Region VIII
999 18th Street - Suite 300
Denver, CO 80202-2466.

(ii) All other required submissions to EPA shall be sent to:

Office of Partnerships and Regulatory Assistance
Air and Radiation Program (8P-AR)
U.S. EPA - Region VIII
999 18th Street - Suite 300
Denver, CO 80202.

Changes for which No Permit Revision Is Required: [WAQSR Ch 6, Sec 3 (d)(iii)]

(G5) The permittee may change operations without a permit revision provided that:

(a) The change is not a modification under any provision of title I of the Clean Air Act;

(b) The change has met the requirements of Chapter 6, Section 2 of the WAQSR and is not a modification under Chapter 5, Section 2 or Chapter 6, Section 4 of the WAQSR and the changes do not exceed the emissions allowed under the permit (whether expressed therein as a rate of emissions or in terms of total emissions); and

(c) The permittee provides EPA and the Division with written notification at least 14 days in advance of the proposed change. The permittee, EPA, and the Division shall attach such notice to their copy of the relevant permit. For each such change, the written notification required shall include a brief description of the change within the permitted facility, the date on which the change will occur, any change in emissions, and any permit term or condition that is no longer applicable as a result of the change. The permit shield, if one exists for this permit, shall not apply to any such change made.

Transfer of Ownership or Operation: [WAQSR Ch 6, Sec 3 (d)(v)(A)(IV)]

(G6) A change in ownership or operational control of this facility is treated as an administrative permit amendment if no other change in this permit is necessary and provided that a written agreement containing a specific date for transfer of permit responsibility, coverage, and liability between the current and new permittee has been submitted to the Division.

Reopening for Cause: [WAQSR Ch 6, Sec 3 (d)(vii)] [W.S. 35-11-206 (f)(ii) and (iv)]

(G7) The Division will reopen and revise this permit as necessary to remedy deficiencies in the following circumstances:

(a) Additional applicable requirements under the Clean Air Act or the WAQSR that become applicable to this source if the remaining permit term is three or more years. Such reopening shall be completed not later than 18 months after promulgation of the applicable requirement. No reopening is required if the effective date of the requirement is later than the date on which the permit is due to expire, unless the original permit or any of its terms and conditions have been extended.

(b) Additional requirements (including excess emissions requirements) become applicable to an affected source under the acid rain program. Upon approval by EPA, excess emissions offset plans shall be deemed to be incorporated into the permit.

(c) The Division or EPA determines that the permit contains a material mistake or that inaccurate statements were made in establishing the emissions standards or other terms or conditions of the permit.

(d) The Division or EPA determines that the permit must be revised or revoked to assure compliance with applicable requirements.

Annual Fee Payment: [WAQSR Ch 6, Sec 3 (f)(i), (ii), and (vi)] [W.S. 35-11-211]

(G8) The permittee shall, as a condition of continued operations, submit an annual fee to the Division as established in Chapter 6, Section 3 (f) of the WAQSR. The Division shall give written notice of the amount of fee to be assessed and the basis for such fee assessment annually. The assessed fee is due on receipt of the notice unless the fee assessment is appealed pursuant to W.S. 35-11-211(d). If any part of the fee assessment is not appealed it shall be paid to the Division on receipt of the written notice. Any remaining fee which may be due after completion of the appeal is immediately due and payable upon issuance of the Council's decision. Failure to pay fees owed the Division is a violation of Chapter 6, Section 3 (f) and W.S. 35-11-203 and may be cause for the revocation of this permit.

Annual Emissions Inventories: [WAQSR Ch 6, Sec 3 (f)(v)(G)]

(G9) The permittee shall submit an annual emission inventory for this facility to the Division for fee assessment and compliance determinations within 60 days following the end of the calendar year. The emissions inventory shall be in a format specified by the Division.

Severability Clause: [WAQSR Ch 6, Sec 3 (h)(i)(E)]

(G10) The provisions of this permit are severable, and if any provision of this permit, or the application of any provision of this permit to any circumstance, is held invalid, the application of such provision to other circumstances, and the remainder of this permit, shall not be affected thereby.

Compliance: [WAQSR Ch 6, Sec 3 (h)(i)(F)(I) and (II)] [W.S. 35-11-203 (b)]

(G11) The permittee must comply with all conditions of this permit. Any permit noncompliance constitutes a violation of the Clean Air Act, Article 2 of the Wyoming Environmental Quality Act, and the WAQSR and is grounds for enforcement action; for permit termination, revocation and reissuance, or modification; or for denial of a permit renewal application. It shall not be a defense for a permittee in an enforcement action that it would have been necessary to halt or reduce the permitted activity in order to maintain compliance with the conditions of this permit.

Permit Actions: [WAQSR Ch 6, Sec 3 (h)(i)(F)(III)] [W.S. 35-11-206 (f)]

(G12) This permit may be modified, revoked, reopened, and reissued, or terminated for cause. The filing of a request by the permittee for a permit modification, revocation and reissuance, or termination, or of a notification of planned changes or anticipated noncompliance does not stay any permit condition.

Property Rights: [WAQSR Ch 6, Sec 3 (h)(i)(F)(IV)]

(G13) This permit does not convey any property rights of any sort, or any exclusive privilege.

Duty to Provide Information: [WAQSR Ch 6, Sec 3 (h)(i)(F)(V)]

(G14) The permittee shall furnish to the Division, within a reasonable time, any information that the Division may request in writing to determine whether cause exists for modifying, revoking and reissuing, or terminating the permit or to determine compliance with the permit. Upon request, the permittee shall also furnish to the Division copies of records required to be kept by the permit, including information claimed and shown to be confidential under W.S. 35-11-1101 (a) of the Wyoming Environmental Quality Act. Upon request by the Division, the permittee shall also furnish confidential information directly to EPA along with a claim of confidentiality.

Emissions Trading: [WAQSR Ch 6, Sec 3 (h)(i)(H)]

(G15) There are no emissions trading provisions in this permit.

Inspection and Entry: [WAQSR Ch 6, Sec 3 (h)(iii)(B)] [W.S. 35-11-206 (c)]

(G16) Authorized representatives of the Division, upon presentation of credentials and other documents as may be required by law, shall be given permission to:

- (a) enter upon the permittee's premises where a source is located or emissions related activity is conducted, or where records must be kept under the conditions of this permit;
- (b) have access to and copy at reasonable times any records that must be kept under the conditions of this permit;
- (c) inspect at reasonable times any facilities, equipment (including monitoring and air pollution control equipment), practices, or operations regulated or required under this permit;
- (d) sample or monitor any substances or parameters at any location, during operating hours, for the purpose of assuring compliance with this permit or applicable requirements.

Excess Emissions Due to an Emergency: [WAQSR Ch 6, Sec 3 (l)]

(G17) The permittee may seek to establish that noncompliance with a technology-based emission limitation under this permit was due to an emergency, as defined in Ch 6, Sec 3 (l)(i) of the WAQSR. To do so, the permittee shall demonstrate the affirmative defense of emergency through properly signed, contemporaneous operating logs, or other relevant evidence that:

- (a) an emergency occurred and that the permittee can identify the cause(s) of the emergency;
- (b) the permitted facility was, at the time, being properly operated;
- (c) during the period of the emergency the permittee took all reasonable steps to minimize levels of emissions that exceeded the emissions standards, or other requirements in this permit;
- (d) the permittee submitted notice of the emergency to the Division within one working day of the time when emission limitations were exceeded due to the emergency. This notice must contain a description of the emergency, any steps taken to mitigate emissions, and corrective actions taken.

Carbon Monoxide: [WAQSR Ch 3, Sec 5]

(G18) The emission of carbon monoxide in stack gases from any stationary source shall be limited as may be necessary to prevent ambient standards from being exceeded.

Open Burning Restrictions: [WAQSR Ch 10, Sec 2] ***(Modified July 28, 2006)***

(G19) ***The permittee conducting an open burn shall comply with all rules and regulations of the Wyoming Department of Environmental Quality, Division of Air Quality, and with the Wyoming Environmental Quality Act.***

(a) No person shall burn prohibited materials using an open burning method, except as may be authorized by permit. "Prohibited materials" means substances including, but not limited to; natural or synthetic rubber products, including tires; waste petroleum products, such as oil or used oil filters; insulated wire; plastic products, including polyvinyl chloride ("PVC") pipe, tubing and connectors; tar, asphalt, asphalt shingles, or tar paper; railroad ties; wood, wood waste, or lumber that is painted or chemically treated; explosives or ammunition; batteries; hazardous waste products; asbestos or asbestos containing materials; or materials which cause dense smoke discharges, excluding refuse and flaring associated with oil and gas well testing, completions and well workovers.

(b) No person or organization shall conduct or cause or permit open burning for the disposal of trade wastes, for a salvage operation, for the destruction of fire hazards if so designated by a jurisdictional fire authority, or for fire fighting training, except when it can be shown by a person or organization that such open burning is absolutely necessary and in the public interest. Any person or organization intending to engage in such open burning shall file a request to do so with the Division.

Diluting and Concealing Emissions: [WAQSR Ch 1, Sec 4]

(G20) No person shall cause or permit the installation or use of any device, contrivance or operational schedule which, without resulting in reduction of the total amount of air contaminant released to the atmosphere, shall dilute or conceal an emission from a source. This condition shall not apply to the control of odors.

Unavoidable Equipment Malfunction: [WAQSR Ch 1, Sec 5] (Modified July 28, 2006)

(G21) (a) Any source believing that any emissions in excess of established regulation limits or standards resulted from an unavoidable equipment malfunction, shall notify the Division within 24 hours of the incident via telephone, electronic mail, fax, or other similar method. A detailed description of the circumstances of the incident as described in paragraph 5(a)(i)(A) Chapter 1, including a corrective program directed at preventing future such incidents, must be submitted within 14 days of the onset of the incident. The Administrator may extend this 14-day time period for cause.

(b) The burden of proof is on the owner or operator of the source to provide sufficient information to demonstrate that an unavoidable equipment malfunction occurred.

Asbestos: [WAQSR Ch 3, Sec 8] (Modified November 26, 2003)

(G22) The permittee shall comply with emission standards for asbestos during abatement, demolition, renovation, manufacturing, spraying, and fabricating activities.

(a) No owner or operator shall build, erect, install, or use any article, machine, equipment, process, or method, the use of which conceals an emission which would otherwise constitute a violation of an applicable standard. Such concealment includes, but is not limited to, the use of gaseous dilutants to achieve compliance with a visible emissions standard, and the piecemeal carrying out of an operation to avoid coverage by a standard that applies only to operations larger than a specified size.

(b) All owners and operators conducting an asbestos abatement project, including an abatement project on a residential building, shall be responsible for complying with Federal requirements and State standards for packaging, transportation, and delivery to an approved waste disposal facility as provided in paragraph (m) of Ch 3, Sec 8.

(c) The permittee shall follow State and Federal standards for any demolition and renovation activities conducted at this facility, including:

(i) A thorough inspection of the affected facility or part of the facility where the demolition or renovation activity will occur shall be conducted to determine the presence of asbestos, including Category I and Category II non-friable asbestos containing material. The results of the inspection will determine which notification and asbestos abatement procedures are applicable to the activity.

(ii) The owner or operator shall follow the appropriate notification requirements of Chapter 3, Section 8(i)(ii).

(iii) The owner or operator shall follow the appropriate procedures for asbestos emissions control, as specified in Chapter 3, Section 8(i)(iii).

(d) No owner or operator of a facility may install or reinstall on a facility component any insulating materials that contain commercial asbestos if the materials are either molded and friable or wet-applied and friable after drying. The provisions of this paragraph do not apply to spray-applied insulating materials regulated under paragraph (j) of Ch 3, Sec 8.

(e) The permittee shall comply with all other requirements of WAQSR Ch 3, Sec 8.

Fugitive Dust: [WAQSR Ch 3, Sec 2(f)] (Modified November 26, 2003)

(G23) The permittee shall minimize fugitive dust in compliance with standards in Ch 3, Sec 2(f) of WAQSR for construction/demolition activities, handling and transportation of materials, and agricultural practices.

Stratospheric Ozone Protection Requirements: [40 CFR Part 82] (Modified November 26, 2003)

(G24) The permittee shall comply with all applicable Stratospheric Ozone Protection Requirements, including but not limited to:

(a) Standards for Appliances [40 CFR Part 82, Subpart F]
The permittee shall comply with the standards for recycling and emission reduction pursuant to 40 CFR Part 82, Subpart F - Recycling and Emissions Reduction, except as provided for motor vehicle air conditioners (MVACs) in Subpart B:

(i) Persons opening appliances for maintenance, service, repair, or disposal must comply with the required practices pursuant to §82.156.

(ii) Equipment used during the maintenance, service, repair, or disposal of appliances must comply with the standards for recycling and recovery equipment pursuant to §82.158.

(iii) Persons performing maintenance, service, repair, or disposal of appliances must be certified by an approved technician certification program pursuant to §82.161.

(iv) Persons disposing of small appliances, MVACs and MVAC-like appliances must comply with record keeping requirements pursuant to §82.166. ("MVAC-like appliance" as defined at §82.152.)

(v) Persons owning commercial or industrial process refrigeration equipment must comply with the leak repair requirements pursuant to §82.166.

(vi) Owners/operators of appliances normally containing 50 or more pounds of refrigerant must keep records of refrigerant purchased and added to such appliances pursuant to §82.166.

(vii) The permittee shall comply with all other requirements of Subpart F.

(b) Standards for Motor Vehicle Air Conditioners [40 CFR Part 82, Subpart B]
If the permittee performs a service on motor (fleet) vehicles when this service involves ozone-depleting substance refrigerant in the motor vehicle air conditioner (MVAC), the permittee is subject to all the applicable requirements as specified in 40 CFR Part 82, Subpart B, Servicing of Motor Vehicle Air Conditioners. The term "motor vehicle" as used in Subpart B does not include a vehicle in which final assembly of the vehicle has not been completed. The term "MVAC" as used in Subpart B does not include the air-tight sea

SUMMARY OF SOURCE EMISSION LIMITS AND REQUIREMENTS

Source ID#'s: **10, 11, 12, 13, 15, 16, 17, 18, 20, 21, 22, 23, 24, 26, 35, 36, 37, 38, 39, 40, 45, 46, 49, 49a, *and 69*** Source Description: **Heaters**

(Modified November 26, 2003) ***(Modified July 28, 2006)***

Pollutant	Emissions Limit / Work Practice Standard	Corresponding Regulation(s)	Testing Requirements	Monitoring Requirements	Recordkeeping Requirements	Reporting Requirements
PM	Opacity limits. [F3] Gas fired only. [F4]	WAQSR Ch 3, Sec 2 *WAQSR Ch 6, Sec 2 Permit MD-674.*	Testing if required. [F17]	Gas fired. [F19]	Test records. [F31]	Report type of fuel fired. [F38] Excess emissions & permit deviations. [F46]
SO_2	SO_2 emission limits (Table I). [F5] Fuel gas H_2S limit: 0.1 gr/dscf ***(163 ppm) as a 3-hr average and 60 ppm as a calendar year average.*** [F5]	40 CFR 60 Subpart J. WAQSR Ch 6, Sec 2 Permits MD-674 *and MD-927A,* ***MD-1115A, and MD-1176.***	Testing if required. [F17]	Continuous H_2S/ fuel gas monitoring. [F21]	Test records. [F31] Continuous H_2S/ fuel gas monitoring records. [F32 and P60-J2]	Continuous H_2S/ fuel gas monitoring reports. [P60-J3] Excess emissions [***F41***]
NO_X	NO_X emission limits. (Table II). [F7]	WAQSR Ch 3, Sec 3 WAQSR Ch 6, Sec 2 Permits CT-1052, MD-674, *MD-927A,* ***and MD-1115A*** ***8/10/04 WAQSR Ch 6, Sec 2 (k) waiver.***	Testing if required. [F17] Performance tests (units 21 and 22) [F15] ***Initial performance tests (units 11 and 12) [F15]***	None [F23]	Test records. [F31]	*Performance test notifications and protocols. [F39]* Test Reports. [F40] Excess emissions & permit deviations. [F46]
CO	CO emission limits. (Table II). [F8]	WAQSR Ch 6, Sec 2 Permits MD-674, *MD-927A,* ***and MD-1115A.*** ***8/10/04 WAQSR Ch 6, Sec 2 (k) waiver.***	Testing if required. [F17] Performance tests (units 21 and 22) [F16] ***Initial performance tests (units 11 and 12) [F16]***	None [F24]	Test records. [F31]	*Performance test notifications and protocols. [F39]* Test Reports. [F40] Excess emissions & permit deviations. [F46]
HAPs	***Emission standards. [P63-DDDDD1]***	***WAQSR Ch 5, Sec 3 and 40 CFR 63 Subpart DDDDD.***	***[P63-DDDDD2]***	***[P63-DDDDD3]***	***[P63-DDDDD6]***	***[P63-DDDDD7 & 8]***

These tables are intended only to highlight and summarize applicable requirements for each source. The corresponding permit conditions, listed in brackets, contain detailed descriptions of the compliance requirements. Compliance with the summary conditions in these tables may not be sufficient to meet permit requirements. These tables may not reflect all emission sources at this facility.

Source ID#'s: **14, 19*, 25*and 50** Source Description: **Fuel Gas Fired Heaters** ***(Modified July 28, 2006)***

Pollutant	Emissions Limit / Work Practice Standard	Corresponding Regulation(s)	Testing Requirements	Monitoring Requirements	Recordkeeping Requirements	Reporting Requirements
PM	Opacity limits (Table I). [F3] Gas fired only. [F4]	WAQSR Ch 3, Sec 2 WAQSR Ch 6, Sec 2 Permit MD-674.	Testing if required. [F17]	Fuel Gas is the only fuel source [F19]	Test records. [F31]	Report type of fuel fired. [F38] Excess emissions & permit deviations. [F46]
SO_2	SO_2 emission limits (Table I). [F5] Fuel gas H_2S limit: 0.1 gr/dscf ***(163 ppm) as a 3-hr average and 60 ppm as a calendar year average.*** [F5]	40 CFR 60 Subpart J. WAQSR Ch 6, Sec 2 Permits MD-269 and MD-674, ***MD-1115A, and MD-1176.***	Testing if required. [F17]	Continuous H_2S/ fuel gas monitoring. [F21 and P60-J1] Fuel gas monitoring (units 19 and 25) [F20]	Test records. [F31] Continuous H_2S/ fuel gas monitoring records. [F32 and P60-J2] Fuel gas monitoring records (unit 25). [F30]	Continuous H_2S/ fuel gas monitoring reports. [P60-J3] Excess emissions [*F41*]
NO_X	NO_X emission limits. (Table II). [F7]	WAQSR Ch 3, Sec 3 WAQSR Ch 6, Sec 2 Permit MD-674, ***and MD-1115A.***	Test once during the permit term (units 14, 25, and 50). [F15] Additional testing if required. [F17]	[F23]	Test records. [F31]	Test results. [F40] Excess emissions & permit deviations.[F46]
HAPs	***Emission standards [P63-DDDDD1]***	***WAQSR Ch 5, Sec 3 and 40 CFR 63 Subpart DDDDD.***	***[P63-DDDDD2]***	***[P63-DDDDD3]***	***[P63-DDDDD6]***	***[P63-DDDDD7 & 8]***

These tables are intended only to highlight and summarize applicable requirements for each source. The corresponding permit conditions, listed in brackets, contain detailed descriptions of the compliance requirements. Compliance with the summary conditions in these tables may not be sufficient to meet permit requirements. These tables may not reflect all emission sources at this facility.

* Unit subject to fuel meter plan requirements - see conditions F20 and F30.

Source ID#'s: **58* and 59*** Source Description: **Indeck Boilers *(Modified July 28, 2006)***

Pollutant	Emissions Limit / Work Practice Standard	Corresponding Regulation(s)	Testing Requirements	Monitoring Requirements	Recordkeeping Requirements	Reporting Requirements
PM	Opacity limits (Table I). [F3] Gas fired only. [F4]	WAQSR Ch 3, Sec 2 WAQSR Ch 6, Sec 2 Permit MD-674	Testing if required. [F17]	***Gas Fired*** [F19]	Test records. [F31]	Report type of fuel fired. [F38] Excess emissions & permit deviations. [F46]
SO_2	SO_2 emission limits (each) 4.10 lb/hr 18.0 TPY [F5] Fuel gas H_2S limit: 0.1 gr/dscf ***(163 ppm) as a 3-hr average and 60 ppm as a calendar year average.*** [F5]	40 CFR 60 Subpart J. WAQSR Ch 6, Sec 2 Permits CT-1050, MD-674 ***and MD-1176.***	Testing if required. [F17]	Continuous H_2S/ fuel gas monitoring. [F21 and P60-J1] Fuel gas monitoring. [F20]	Test records. [F31] Continuous H_2S/ fuel gas monitoring records. [F32 and P60-J2] Fuel gas monitoring records. [F30]	Continuous H_2S/ fuel gas monitoring reports. [P60-J3] Excess emissions [***F41***] Excess emissions & permit deviations. [F46]
NO_X	NO_X emission limits (each) 0.10 lb/MMBtu 17.80 lb/hr 77.8 TPY [F7] ***Subpart Db emission limits [P60-Db1]***	WAQSR Ch 6, Sec 2 Permits CT-1050, MD-674. ***WAQSR Ch 5, Sec 2 and 40 CFR 60 Subpart Db***	Testing if required. [F17 ***and P60-Db1***]	Annual Test [F23] Continuous monitoring [F23 and P60-Db1]	Test records. [F31] Continuous monitoring records [F32 and P60-Db1 ***& 2***]	Test Report [F40] Excess emissions & monitoring system reports. [F41 and P60-Db4] Excess emissions & permit deviations. [F46]
CO	CO emission limits (each) 0.04 lb/MMBtu 7.10 lb/hr 31.1 TPY [F8]	WAQSR Ch 6, Sec 2 Permits CT-1050, MD-674.	Testing if required. [F17]	None [F24]	Test records. [F31]	Test results. [F40] Excess emissions & permit deviations. [F46]
HAPs	***Emission standards. [P63-DDDDD1]***	***WAQSR Ch 5, Sec 3 and 40 CFR 63 Subpart DDDDD.***	***[P63-DDDDD2]***	***[P63-DDDDD3]***	***[P63-DDDDD6]***	***[P63-DDDDD7 & 8]***

These tables are intended only to highlight and summarize applicable requirements for each source. The corresponding permit conditions, listed in brackets, contain detailed descriptions of the compliance requirements. Compliance with the summary conditions in these tables may not be sufficient to meet permit requirements. These tables may not reflect all emission sources at this facility.

* Unit subject to fuel meter plan requirements - see conditions F20 and F30.

Source ID#'s: **47 and 48** Source Description: **Coker Compressor Engines** ***(Modified July 28, 2006)***

Pollutant	Emissions Limit / Work Practice Standard	Corresponding Regulation(s)	Testing Requirements	Monitoring Requirements	Recordkeeping Requirements	Reporting Requirements
PM	Opacity limits (Table I). [F3] Gas fired only. [F4]	WAQSR Ch 3, Sec 2 WAQSR Ch 6, Sec 2 Permit MD-674	Testing if required. [F17]	***Gas Fired*** [F19]	Test records. [F31]	Report type of fuel fired. [F38] Excess emissions & permit deviations. [F46]
SO_2	SO_2 emission limits Unit 47: 0.30 lb/hr; 1.1 TPY Unit 48: 0.20 lb/hr; 0.9 TPY [F5] Fuel gas H_2S limit: 0.1 gr/dscf ***(163 ppm) as a 3-hr average and 60 ppm as a calendar year average.*** [F5]	40 CFR 60 Subpart J. WAQSR Ch 6, Sec 2 Permit MD-674 ***and MD-1176.***	Testing if required. [F17]	Continuous H_2S/ fuel gas monitoring. [F21 and P60-J1]	Test records. [F31] Continuous H_2S/ fuel gas monitoring records. [F32 and P60-J2]	Continuous H_2S/ fuel gas monitoring reports. [P60-J3] Excess emissions [***F41***]
NO_X	NO_X emission limits. Unit 47: 4.10 lb/hr; 17.8 TPY Unit 48: 3.30 lb/hr; 14.5 TPY [F7]	WAQSR Ch 6, Sec 2 Permit MD-674.	Quarterly testing. [F15] Additional testing if required. [F17]	Quarterly Testing [F23]	Test records. [F31]	Test results. [F40] Excess emissions & permit deviations.[F46]
CO	CO emission limits. Unit 47: 6.80 lb/hr; 29.7 TPY Unit 48: 5.50 lb/hr; 24.1 TPY [F8]	WAQSR Ch 6, Sec 2 Permit MD-674.	Quarterly testing. [F16] Additional testing if required. [F17]	Quarterly Testing [F24]	Test records. [F31]	Test results. [F40] Excess emissions & permit deviations. [F46]
HAPs	***Emission standards [P63-ZZZZ1]***	***WAQSR Ch 5, Sec 3 and 40 CFR 63 Subpart ZZZZ.***	***[P63-ZZZZ2]***	***[P63-ZZZZ3]***	***[P63-ZZZZ6]***	***[P63-ZZZZ7 & 8]***

These tables are intended only to highlight and summarize applicable requirements for each source. The corresponding permit conditions, listed in brackets, contain detailed descriptions of the compliance requirements. Compliance with the summary conditions in these tables may not be sufficient to meet permit requirements. These tables may not reflect all emission sources at this facility.

Source ID#: **34a** Source Description: **CO Boiler** ***(Modified July 28, 2006)***

Pollutant	Emissions Limit / Work Practice Standard	Corresponding Regulation(s)	Testing Requirements	Monitoring Requirements	Recordkeeping Requirements	Reporting Requirements
PM	40 % opacity limit [F3] Gas fired only [F4]	WAQSR Ch 3, Sec 2 WAQSR Ch 6, Sec 2 Permit MD-674	Testing if required. [F17]	Gas fired. [F22]	Test records. [F31]	Report type of fuel fired. [F38] Excess emissions & permit deviations. [F46].
SO_2	4.30 lb/hr, 19.0 TPY [F5] Fuel gas H_2S limit: 0.1 gr/dscf ***(163 ppm) as a 3-hr average and 60 ppm as a calendar year average.*** [F5]	40 CFR 60 Subpart J (fuel gas system). WAQSR Ch 6, Sec 2 Permit MD-674 ***and MD-1176.***	Testing if required. [F17]	Continuous H_2S/ fuel gas monitoring. [F21 and P60-J1]	Continuous H_2S/ fuel gas monitoring records. [F32][P60-J1]	Continuous H_2S/ fuel gas monitoring reports. [P60-J3] Excess emissions & permit deviations. [F46]
NO_X	0.23 lb/MMBtu, 43.00 lb/hr, 188.3 TPY [F7]	WAQSR Ch 3, Sec 3. WAQSR Ch 6, Sec 2 Permit MD-674.	Annual testing. [F15] Additional testing if required. [F17]	None. [F23]	Test records. [F31]	Test results. [F40] Excess emissions & permit deviations. [F46]
CO	0.16 lb/MMBtu, 29.90 lb/hr, 131.0 TPY [F8]	WAQSR Ch 6, Sec 2 Permit MD-674.	Testing once during permit term. [F16] Additional testing if required. [F17]	None. [F24]	Test records. [F31]	Test results. [F40] Excess emissions & permit deviations. [F46]
HAPs	***Emission standards. [P63-DDDDD1]***	***WAQSR Ch 5, Sec 3 and 40 CFR 63 Subpart DDDDD.***	***[P63-DDDDD2]***	***[P63-DDDDD3]***	***[P63-DDDDD6]***	***[P63-DDDDD7 & 8]***

These tables are intended only to highlight and summarize applicable requirements for each source. The corresponding permit conditions, listed in brackets, contain detailed descriptions of the compliance requirements. Compliance with the summary conditions in these tables may not be sufficient to meet permit requirements. These tables may not reflect all emission sources at this facility.

Source ID#'s: **34b** Source Description: **FCCU Regenerator** ***(Modified July 28, 2006)***

Pollutant	Emissions Limit / Work Practice Standard	Corresponding Regulation(s)	Testing Requirements	Monitoring Requirements	Recordkeeping Requirements	Reporting Requirements
PM	40% Opacity limit. [F3] 70.80 lb/hr, 310.0 TPY. [F6]	WAQSR Ch 3, Sec 2. WAQSR Ch 6, Sec 2 Permit MD-674.	Annual test [F14] Additional testing if required. [F17]	***Continuous opacity monitoring [F19 and P63-UUU1]***	Test records. [F31] ***Continuous monitoring records. [F32 and P63-UUU1]***	Test results. [F40] ***Continuous monitoring reports. [F41 and P63-UUU1 & 6]***
SO_2	320.00 lb/hr 1401.6 TPY [F5]	40 CFR 60 Subpart J. WAQSR Ch 6, Sec 2 Permits MD-137, MD-188, and MD-674.	Testing if required. [F17]	Continuous monitoring. [F21]	Test records. [F31] Continuous monitoring records. [F32]	Test results. [F40] Continuous monitoring reports. [F41] Excess emissions & permit deviations. [F46]
NO_X	53.00 lb/hr 232.1 TPY [F7]	WAQSR Ch 6, Sec 2 Permits MD-137, MD-188, and MD-674.	Testing if required. [F17]	Continuous monitoring. [F23]	Test records. [F31] Continuous monitoring records. [F32]	Continuous monitoring reports. [F41] Excess emissions & permit deviations. [F46]
CO	30.00 lb/hr 131.4 TPY [F8]	WAQSR Ch 6, Sec 2 Permits MD-137, MD-188, and MD-674.	Testing if required. [F17]	***Continuous CO monitoring [F24 and P63-UUU1]***	Test records. [F31] ***Continuous monitoring records. [F32 and P63-UUU1]***	Test results. [F40] ***Continuous monitoring reports. [F41 and P63-UUU1 & 6]***
HAPs	***Emission standards. [P63-UUU1 & 2]***	***WAQSR Ch 5, Sec 3 and 40 CFR 63 Subpart UUU.***	***[P63-UUU1]***	***[P63-UUU1]***	***[P63-UUU1 & 4]***	***[P63-UUU1, 5, & 6]***

These tables are intended only to highlight and summarize applicable requirements for each source. The corresponding permit conditions, listed in brackets, contain detailed descriptions of the compliance requirements. Compliance with the summary conditions in these tables may not be sufficient to meet permit requirements. These tables may not reflect all emission sources at this facility.

Source ID#'s: **42** Source Description: **Sulfur Plant Incinerator** ***(Modified July 28, 2006)***

Pollutant	Emissions Limit / Work Practice Standard	Corresponding Regulation(s)	Testing Requirements	Monitoring Requirements	Recordkeeping Requirements	Reporting Requirements
PM	20% Opacity limit. [F3]	WAQSR Ch 3, Sec 2.	Testing if required. [F17]	Quarterly Method 9. [F19]	Test records. [F31] Opacity records. [F31]	Test results. [F40] Opacity reports. [F38] Excess emissions & permit deviations. [F46]
SO_2	250 ppm (volume, dry at zero percent excess air), 18.***6*** lb/hr, ***35.0*** TPY [F5 and P60-J1]	40 CFR 60 Subpart J. WAQSR Ch 6, Sec 2 Permits CT-84, MD-188, MD-798, ***and MD-1176***.	Testing if required. [F17]	Continuous monitoring [F21 and P60-J1]	Test records. [F31] Continuous monitoring records. [F32 and P60-J2]	Test results. [F40] Quarterly monitoring ***and excess emission*** reports [P60-J3] Excess emissions & permit deviations. [F46]
NO_X	2.4 lb/hr, 10.6 TPY [F7]	WAQSR Ch 6, Sec 2 Permit MD-674.	Testing if required. [F17]	Operate and maintain to minimize emissions. [F23]	Test records. [F31]	Test results. [F40] Excess emissions & permit deviations. [F46]

These tables are intended only to highlight and summarize applicable requirements for each source. The corresponding permit conditions, listed in brackets, contain detailed descriptions of the compliance requirements. Compliance with the summary conditions in these tables may not be sufficient to meet permit requirements. These tables may not reflect all emission sources at this facility.

Source ID#'s: **43 and 44** Source Description: **Plant #1 and Plant #2 Flares** ***(Modified July 28, 2006)***

Pollutant	Emissions Limit / Work Practice Standard	Corresponding Regulation(s)	Testing Requirements	Monitoring Requirements	Recordkeeping Requirements	Reporting Requirements
PM	Opacity and pilot at flare per WAQSR Ch 5, Sec 2(m) and ***Ch 5***, Sec 3(m). ***[F9 and P63-CC1]***	40 CFR 63 Subpart CC WAQSR Ch 3, Sec 2	Testing if required. [F17]	Monthly Method 22. [F19] Pilot monitoring. [F19]	Test records. [F31] Opacity records. [F31] ***Pilot monitoring records [F33]***	Test results. [F40] Opacity reports. [F38] ***Pilot monitoring reports [F42]*** Excess emissions & permit deviations. [F46]
SO_2	Plant #1 ***(Coker)*** Flare: 288.00 lb/hr (3hr avg.), 484.6 TPY, ***163 ppm as a 3-hr average, and 60 ppm as a calendar year average.*** [F5] Plant #2 ***(Main)*** Flare: ***163 ppm as a 3-hr average and 60 ppm as a calendar year average. [F5 (d) and P60-J1]*** ***Plant #2 (Main) Flare: Operate in accordance with contingency plan and minimize emissions [F9]***	WAQSR Ch 6, Sec 2 Permits MD-179, MD-254, and MD-674, ***MD-1176.*** WAQSR Ch 5, Sec 2 and 40 CFR 60 Subpart J.	Testing if required. [F17]	***Subpart J monitoring [P60-J1]***	Test records. [F31] ***Subpart J records [P60-J2]***	***Test results. [F40]*** Excess emissions & permit deviations. [F46]
Odor	Maintain camera, spare coker knockout drum pump, and spare compressor engine. Use an odor abatement compound on the coker drums. [ODOR-1]	***WAQSR Ch 6, Sec 2 Permit MD-1176.***	NA	Monitor operating hours of compressor engines. Monitor odor abatement compound usage. [ODOR-2]	Report pump failures. Record proper coker operating procedures. Record primary compressor downtime. [ODOR-3]	Whether odor control program procedures at coker were followed. Whether backup units were available. [ODOR-4] Excess emissions & permit deviations. [F46]

These tables are intended only to highlight and summarize applicable requirements for each source. The corresponding permit conditions, listed in brackets, contain detailed descriptions of the compliance requirements. Compliance with the summary conditions in these tables may not be sufficient to meet permit requirements. These tables may not reflect all emission sources at this facility.

Source ID#'s: 62 Source Description: Truck Loading Rack and VRU control system (Modified July 28, 2006)

Pollutant	*Emissions Limit / Work Practice Standard*	*Corresponding Regulation(s)*	*Testing Requirements*	*Monitoring Requirements*	*Recordkeeping Requirements*	*Reporting Requirements*
VOC & HAPs	*5.5 TPY VOC [F11]* *Subpart GGG requirements [P60-GGG1]* *Subpart CC [P63-CC1]*	*WAQSR Ch 6, Sec 2 permit MD-1021.* *WAQSR Ch 5, Sec 2 and 40 CFR 60 Subpart GGG* *WAQSR Ch 5, Sec 3 and 40 CFR 63 Subpart CC*	*Testing if required. [F17]*	*Continuous emissions monitoring [F27 and P63-CC1]*	*Test records. [F31]* *Monitoring records [F35 and P63-CC1]*	*Test results. [F40]* *Monitoring reports [F44]* *Excess emissions & permit deviations. [F46]*

Source Description: **Wastewater System** ***(Modified July 28, 2006)***

Pollutant	Emissions Limit / Work Practice Standard	Corresponding Regulation(s)	Testing Requirements	Monitoring Requirements	Recordkeeping Requirements	Reporting Requirements
VOCs	Openings of the Separator tank gasketed, latched, and closed. [F9] No detectable emissions (500 ppm VOCs) from roof, access doors and openings of the separator tank. [F9] Repairs made within 15 days except when technically impossible. [F9]	WAQSR Ch 6, Sec 2 (k) Permit MD-106 ***and MD-1176.***	Testing if required. [F17]	Semiannual Method 21 monitoring. [F26]	Monitoring records. [F33]	Operation and maintenance reports. [F42] Excess emissions & permit deviations. [F46]

These tables are intended only to highlight and summarize applicable requirements for each source. The corresponding permit conditions, listed in brackets, contain detailed descriptions of the compliance requirements. Compliance with the summary conditions in these tables may not be sufficient to meet permit requirements. These tables may not reflect all emission sources at this facility.

Source Description: **Coke Storage Pile Fugitive Emissions**

Pollutant	Emissions Limit / Work Practice Standard	Corresponding Regulation(s)	Testing Requirements	Monitoring Requirements	Recordkeeping Requirements	Reporting Requirements
PM	Opacity limit 20%. [F2] Dust suppressant treatment as necessary. [F2] Coke only stored outside when rail cars are not available. [F2]	WAQSR Ch 6, Sec 2 (k) 4/14/98 waiver.	Testing if required. [F17]	Monitor coke added, removed and in storage on a daily basis, when in stored outside. [F18]	Test records. [F31] Record water and dust suppressant usage, coke storage quantities, and availability of railcars for coke shipment. [F29]	Test reports. [F40] Report water and dust suppressant usage, coke storage quantities, and availability of railcars for coke shipment. [F37] Excess emissions & permit deviations. [F46]

Source ID#: 78 Source Description: Porter Draw Diesel Water Pump Engine (Modified July 28, 2006)

Pollutant	***Emissions Limit / Work Practice Standard***	***Corresponding Regulation(s)***	***Testing Requirements***	***Monitoring Requirements***	***Recordkeeping Requirements***	***Reporting Requirements***
VOC	***Opacity limit 30%. [F3]***	***WAQSR Ch 3, Sec 2.***	***Testing if required. [F17]***	***Semiannual Method 9 observations [F19]***	***Test records. [F31]*** ***Monitoring records [F31]***	***Visual monitoring reports [F38]*** ***Test results. [F40]*** ***Excess emissions & permit deviations. [F46]***
NO_X	***Engine is limited to 4000 hours of operation per year; maintain in accordance with recommendations. [F9]***	***10/14/03 WAQSR Ch 6, Sec 2 (k) waiver.***	***Testing if required. [F17]***	***Monitor hours of operation [F26]***	***Test records. [F31]*** ***Hours of operation and maintenance records [F33]***	***Test results. [F40]*** ***Monitoring and maintenance reports [F42]*** ***Excess emissions & permit deviations.[F46]***
CO	***Engine is limited to 4000 hours of operation per year; maintain in accordance with recommendations. [F9]***	***10/14/03 WAQSR Ch 6, Sec 2 (k) waiver.***	***Testing if required. [F17]***	***Monitor hours of operation [F26]***	***Test records. [F31]*** ***Hours of operation and maintenance records [F33]***	***Test results. [F40]*** ***Monitoring and maintenance reports [F42]*** ***Excess emissions & permit deviations.[F46]***

These tables are intended only to highlight and summarize applicable requirements for each source. The corresponding permit conditions, listed in brackets, contain detailed descriptions of the compliance requirements. Compliance with the summary conditions in these tables may not be sufficient to meet permit requirements. These tables may not reflect all emission sources at this facility.

Source ID#: 79 Source Description: 525 hp Caterpillar 3406E diesel backup air compressor engine (Modified July 28, 2006)

Pollutant	*Emissions Limit / Work Practice Standard*	*Corresponding Regulation(s)*	*Testing Requirements*	*Monitoring Requirements*	*Recordkeeping Requirements*	*Reporting Requirements*
PM	*Opacity limit 30%. [F3]*	*WAQSR Ch 3, Sec 2.*	*Testing if required. [F17]*	*Semiannual Method 9 observations [F19]*	*Test records. [F31]* *Monitoring records [F31]*	*Visual monitoring reports [F38]* *Test results. [F40]* *Excess emissions & permit deviations. [F46]*
NO_X	*Engine is limited to 2160 hours of operation per year; maintain in accordance with recommendations. [F9]*	*6/15/05 WAQSR Ch 6, Sec 2 (k) waiver.*	*Testing if required. [F17]*	*Monitor hours of operation [F26]*	*Test records. [F31]* *Hours of operation and maintenance records [F33]*	*Test results. [F40]* *Monitoring and maintenance reports [F42]* *Excess emissions & permit deviations.[F46]*
CO	*Engine is limited to 2160 hours of operation per year; maintain in accordance with recommendations. [F9]*	*6/15/05 WAQSR Ch 6, Sec 2 (k) waiver.*	*Testing if required. [F17]*	*Monitor hours of operation [F26]*	*Test records. [F31]* *Hours of operation and maintenance records [F33]*	*Test results. [F40]* *Monitoring and maintenance reports [F42]* *Excess emissions & permit deviations.[F46]*
HAPs	*Emission standards [P63-ZZZZ1]*	*WAQSR Ch 5, Sec 3 and 40 CFR 63 Subpart ZZZZ.*	*[P63-ZZZZ2]*	*[P63-ZZZZ3]*	*[P63-ZZZZ6]*	*[P63-ZZZZ7 & 8]*

These tables are intended only to highlight and summarize applicable requirements for each source. The corresponding permit conditions, listed in brackets, contain detailed descriptions of the compliance requirements. Compliance with the summary conditions in these tables may not be sufficient to meet permit requirements. These tables may not reflect all emission sources at this facility.

ABBREVIATIONS *(Modified July 28, 2006)*

ACFM	Actual cubic feet per minute
AQD	Air Quality Division
BACT	Best available control technology (see Definitions)
bbl/day	Barrel(s) per day
BPSD	Barrel(s) per stream day
Btu	British Thermal Unit
CAA	Clean Air Act
CEMS	Continuous Emissions Monitoring System(s)
COMS	Continuous Opacity Monitoring Systems(s)
CFR	Code of Federal Regulations
CO	Carbon monoxide
°F	Degrees Fahrenheit
DEQ	Wyoming Department of Environmental Quality
dscf	Dry Standard Cubic foot
EPA	United States Environmental Protection Agency (see Definitions)
FCCU	Fluidized Catalytic Cracking Unit
g	Gram(s)
g/hp-hr	Gram(s) per horsepower hour
gal	Gallon(s)
GPM	Gallon(s) per minute
gr	Grain(s)
H_2S	Hydrogen sulfide
HAP(s)	Hazardous air pollutant(s)
hp	Horsepower
hr	Hour(s)
ID#	Identification number
lb	Pound(s)
M	Thousand
ltpd	Long ton(s) per day
MACT	Maximum available control technology (see Definitions)
mg	Milligram(s)
MM	Million
MVAC	***Motor Vehicle Air Conditioner***
NO_X	Oxides of nitrogen
O_2	Oxygen
OPP	Operating Permit Program
$PM_{2.5}$	Particulate matter less than or equal to a nominal diameter of 2.5 micrometers
PM_{10}	Particulate matter less than or equal to a nominal diameter of 10 micrometers
ppmv	Parts per million (by volume)
ppmw	Parts per million (by weight)
SCF	Standard cubic foot (feet)
SCM	Standard cubic meter(s)
SIC	Standard Industrial Classification
SO_2	Sulfur dioxide
SO_3	Sulfur trioxide
SO_X	Oxides of sulfur
TPH	Ton(s) per hour
TPY	Ton(s) per year
U.S.C.	United States Code
μg	Microgram(s)
VOC(s)	Volatile organic compound(s)
VRU	***Vapor recovery unit***
W.S.	Wyoming Statute
WAQSR	Wyoming Air Quality Standards & Regulations (see Definitions)

DEFINITIONS

"Act" means the Clean Air Act, as amended, 42 U.S.C. 7401, *et seq.*

"Administrator" means Administrator of the Air Quality Division, Wyoming Department of Environmental Quality.

"Applicable requirement" means all of the following as they apply to emissions units at a source subject to Chapter 6, Section 3 of the WAQSR (including requirements with future effective compliance dates that have been promulgated or approved by the EPA or the State through rulemaking at the time of issuance of the operating permit):

(a) Any standard or other requirement provided for in the Wyoming implementation plan approved or promulgated by EPA under title I of the Act that implements the relevant requirements of the Act, including any revisions to the plan promulgated in 40 C.F.R. Part 52;

(b) Any standards or requirements in the WAQSR which are not a part of the approved Wyoming implementation plan and are not federally enforceable;

(c) Any term or condition of any preconstruction permits issued pursuant to regulations approved or promulgated through rulemaking under title I, including parts C or D of the Act and including Chapter 5, Section 2 and Chapter 6, Sections 2 and 4 of the WAQSR;

(d) Any standard or other requirement promulgated under Section 111 of the Act, including Section 111(d) and Chapter 5, Section 2 of the WAQSR;

(e) Any standard or other requirement under Section 112 of the Act, including any requirement concerning accident prevention under Section 112(r)(7) of the Act and including any regulations promulgated by EPA and the State pursuant to Section 112 of the Act;

(f) Any standard or other requirement of the acid rain program under title IV of the Act or the regulations promulgated thereunder;

(g) Any requirements established pursuant to Section 504(b) or Section 114(a)(3) of the Act concerning enhanced monitoring and compliance certifications;

(h) Any standard or other requirement governing solid waste incineration, under Section 129 of the Act;

(i) Any standard or other requirement for consumer and commercial products, under Section 183(e) of the Act (having to do with the release of volatile organic compounds under ozone control requirements);

(j) Any standard or other requirement of the regulations promulgated to protect stratospheric ozone under title VI of the Act, unless the EPA has determined that such requirements need not be contained in a title V permit;

(k) Any national ambient air quality standard or increment or visibility requirement under part C of title I of the Act, but only as it would apply to temporary sources permitted pursuant to Section 504(e) of the Act; and

(l) Any state ambient air quality standard or increment or visibility requirement of the WAQSR.

(m) Nothing under paragraphs (A) through (L) above shall be construed as affecting the allowance program and Phase II compliance schedule under the acid rain provision of Title IV of the Act.

"BACT" or "Best available control technology" means an emission limitation (including a visible emission standard) based on the maximum degree of reduction of each pollutant subject to regulation under the WAQSR or regulation under the Federal Clean Air Act, which would be emitted from or which results for any proposed major emitting facility or major modification which the Administrator, on a case-by-case basis, taking into account energy, environmental, and

economic impacts and other costs, determines is achievable for such source or modification through application or production processes and available methods, systems, and techniques, including fuel cleaning or treatment or innovative fuel combustion techniques for control of such pollutant. If the Administrator determines that technological or economic limitations on the application of measurement methodology to a particular class of sources would make the imposition of an emission standard infeasible, he may instead prescribe a design, equipment, work practice or operational standard or combination thereof to satisfy the requirement of Best Available Control Technology. Such standard shall, to the degree possible, set forth the emission reduction achievable by implementation of such design, equipment, work practice, or operation and shall provide for compliance by means which achieve equivalent results. Application of BACT shall not result in emissions in excess of those allowed under Chapter 5, Section 2 of the WAQSR and any other new source performance standard or national emission standards for hazardous air pollutants promulgated by EPA but not yet adopted by the state.

"Department" means the Wyoming Department of Environmental Quality or its Director.

"Director" means the Director of the Wyoming Department of Environmental Quality.

"Division" means the Air Quality Division of the Wyoming Department of Environmental Quality or its Administrator.

"Emergency" means any situation arising from sudden and reasonably unforeseeable events beyond the control of the source, including acts of God, which situation requires immediate corrective action to restore normal operation, and that causes the source to exceed a technology-based emission limitation under the permit, due to unavoidable increases in emissions attributable to the emergency. An emergency shall not include noncompliance to the extent caused by improperly designed equipment, lack of preventative maintenance, careless or improper operation, or operator error.

"EPA" means the Administrator of the U.S. Environmental Protection Agency or the Administrator's designee.

"Fuel-burning equipment" means any furnace, boiler apparatus, stack, or appurtenances thereto used in the process of burning fuel or other combustible material for the purpose of producing heat or power by indirect heat transfer.

"Fugitive emissions" means those emissions which could not reasonably pass through a stack chimney, vent, or other functionally equivalent opening.

"Insignificant activities" means those activities which are incidental to the facility's primary business activity and which result in emissions of less than one ton per year of a regulated pollutant not included in the Section 112 (b) list of hazardous air pollutants or emissions less than 1000 pounds per year of a pollutant regulated pursuant to listing under Section 112 (b) of the Act provided, however, such emission levels of hazardous air pollutants do not exceed exemptions based on insignificant emission levels established by EPA through rulemaking for modification under Section 112 (g) of the Act.

"MACT" or "Maximum achievable control technology" means the maximum degree of reduction in emissions that is deemed achievable for new sources in a category or subcategory that shall not be less stringent than the emission control that is achieved in practice by the best controlled similar source, as determined by the Administrator. Emission standards promulgated for existing sources in a category or subcategory may be less stringent than standards for new sources in the same category or subcategory but shall not be less stringent, and may be more stringent than:

(a) the average emission limitation achieved by the best performing 12 percent of the existing sources (for which the Administrator has emission information), excluding those sources that have, within 18 months before the emission standard is proposed or within 30 months before such standard is promulgated, whichever is later, first achieved a level of emission rate or emission reduction which complies, or would comply if the source is not subject to such standard, with the lowest achievable emission rate applicable to the source category and prevailing at the time, in the category or subcategory for categories and subcategories with 30 or more sources, or

(b) the average emission limitation achieved by the best performing five sources (for which the Administrator has or could reasonably obtain emissions information) in the category or subcategory for categories or subcategories with fewer than 30 sources.

"Modification" means any physical change in, or change in the method of operation of, an affected facility which increases the amount of any air pollutant (to which any state standards applies) emitted by such facility or which results in the emission of any such air pollutant not previously emitted.

"Permittee" means the person or entity to whom a Chapter 6, Section 3 permit is issued.

"Potential to emit" means the maximum capacity of a stationary source to emit any air pollutant under its physical and operational design. Any physical or operational limitation on the capacity of a source to emit an air pollutant, including air pollution control equipment and restrictions on hours of operation or on the type or amount of material combusted, stored or processed, shall be treated as part of its design if the limitation is enforceable by EPA and the Division. This term does not alter or affect the use of this term for any other purposes under the Act, or the term "capacity factor" as used in title IV of the Act or the regulations promulgated thereunder.

"Regulated air pollutant" means the following:

(a) Nitrogen oxides (NO_X) or any volatile organic compound;

(b) Any pollutant for which a national ambient air quality standard has been promulgated;

(c) Any pollutant that is subject to any standard established in Chapter 5, Section 2 of the WAQSR or Section 111 of the Act;

(d) Any Class I or II substance subject to a standard promulgated under or established by title VI of the Act; or

(e) Any pollutant subject to a standard promulgated under Section 112 or other requirements established under Section 112 of the Act, including Sections 112(g), (j), and (r) of the Act, including the following:

(i) Any pollutant subject to requirements under Section 112(j) of the Act. If EPA fails to promulgate a standard by the date established pursuant to Section 112(e) of the Act, any pollutant for which a subject source would be major shall be considered to be regulated on the date 18 months after the applicable date established pursuant to Section 112(e) of the Act; and

(ii) Any pollutant for which the requirements of Section 112(g)(2) of the Act have been met, but only with respect to the individual source subject to Section 112(g)(2) requirement.

(f) Pollutants regulated solely under Section 112(r) of the Act are to be regulated only with respect to the requirements of Section 112(r) for permits issued under this Chapter 6, Section 3 of the WAQSR.

"Renewal" means the process by which a permit is reissued at the end of its term.

"Responsible official" means one of the following:

(a) For a corporation:

(i) A president, secretary, treasurer, or vice-president of the corporation in charge of a principal business function, or any other person who performs similar policy or decision-making functions for the corporation; or

(ii) A duly authorized representative of such person if the representative is responsible for the overall operation of one or more manufacturing, production, or operating facilities applying for or subject to a permit and either:

(A) the facilities employ more than 250 persons or have gross annual sales or expenditures exceeding $25 million (in second quarter 1980 dollars); or

(B) the delegation of authority to such representative is approved in advance by the Division;

(b) For a partnership or sole proprietorship: a general partner or the proprietor, respectively;

(c) For a municipality, State, Federal, or other public agency: Either a principal executive officer or ranking elected official. For the purposes of this part, a principal executive officer of a federal agency includes the chief executive officer having responsibility for the overall operations of a principal geographic unit of the agency; or

(d) For affected sources:

(i) The designated representative or alternate designated representative in so far as actions, standards, requirements, or prohibitions under title IV of the Act or the regulations promulgated thereunder are concerned; and

(ii) The designated representative, alternate designated representative, or responsible official under Chapter 6, Section 3 (b)(xxvi) of the WAQSR for all other purposes under this section.

"WAQSR" means the Wyoming Air Quality Standards and Regulations promulgated under the Wyoming Environmental Quality Act, W.S. §35-11-101, *et seq.*

APPENDIX A

40 CFR 60 SUBPART J

Subpart J-Standards of Performance for Petroleum Refineries

§ 60.100 Applicability, designation of affected facility, and reconstruction.

(a) The provisions of this subpart are applicable to the following affected facilities in petroleum refineries: fluid catalytic cracking unit catalyst regenerators, fuel gas combustion devices, and all Claus sulfur recovery plants except Claus plants of 20 long tons per day (LTD) or less. The Claus sulfur recovery plant need not be physically located within the boundaries of a petroleum refinery to be an affected facility, provided it processes gases produced within a petroleum refinery.

(b) Any fluid catalytic cracking unit catalyst regenerator or fuel gas combustion device under paragraph (a) of this section which commences construction or modification after June 11, 1973, or any Claus sulfur recovery plant under paragraph (a) of this section which commences construction or modification after October 4, 1976, is subject to the requirements of this subpart except as provided under paragraphs (c) and (d) of this section.

(c) Any fluid catalytic cracking unit catalyst regenerator under paragraph (b) of this section which commences construction or modification on or before January 17, 1984, is exempted from §60.104(b).

(d) Any fluid catalytic cracking unit in which a contact material reacts with petroleum derivatives to improve feedstock quality and in which the contact material is regenerated by burning off coke and/or other deposits and that commences construction or modification on or before January 17, 1984, is exempt from this subpart.

(e) For purposes of this subpart, under §60.15, the "fixed capital cost of the new components" includes the fixed capital cost of all depreciable components which are or will be replaced pursuant to all continuous programs of component replacement which are commenced within any 2-year period following January 17, 1984. For purposes of this paragraph, "commenced" means that an owner or operator has undertaken a continuous program of component replacement or that an owner or operator has entered into a contractual obligation to undertake and complete, within a reasonable time, a continuous program of component replacement.

[43 FR 10868, Mar. 15, 1978, as amended at 44 FR 61543, Oct. 25, 1979; 54 FR 34026, Aug. 17, 1989]

§ 60.101 Definitions.

As used in this subpart, all terms not defined herein shall have the meaning given them in the Act and in subpart A.

(a) *Petroleum refinery* means any facility engaged in producing gasoline, kerosene, distillate fuel oils, residual fuel oils, lubricants, or other products through distillation of petroleum or through redistillation, cracking or reforming of unfinished petroleum derivatives.

(b) *Petroleum* means the crude oil removed from the earth and the oils derived from tar sands, shale, and coal.

(c) *Process gas* means any gas generated by a petroleum refinery process unit, except fuel gas and process upset gas as defined in this section.

(d) *Fuel gas* means any gas which is generated at a petroleum refinery and which is combusted. Fuel gas also includes natural gas when the natural gas is combined and combusted in any proportion with a gas generated at a refinery. Fuel gas does not include gases generated by catalytic cracking unit catalyst regenerators and fluid coking burners.

(e) *Process upset gas* means any gas generated by a petroleum refinery process unit as a result of start-up, shut-down, upset or malfunction.

(f) *Refinery process unit* means any segment of the petroleum refinery in which a specific processing operation is conducted.

(g) *Fuel gas combustion device* means any equipment, such as process heaters, boilers and flares used to combust fuel gas, except facilities in which gases are combusted to produce sulfur or sulfuric acid.

(h) *Coke burn-off* means the coke removed from the surface of the fluid catalytic cracking unit catalyst by combustion in the catalyst regenerator. The rate of coke burn-off is calculated by the formula specified in §60.106.

(i) *Claus sulfur recovery plant* means a process unit which recovers sulfur from hydrogen sulfide by a vapor-phase catalytic reaction of sulfur dioxide and hydrogen sulfide.

(j) *Oxidation control system* means an emission control system which reduces emissions from sulfur recovery plants by converting these emissions to sulfur dioxide.

(k) *Reduction control system* means an emission control system which reduces emissions from sulfur recovery plants by converting these emissions to hydrogen sulfide.

(l) *Reduced sulfur compounds* means hydrogen sulfide (H_2S), carbonyl sulfide (COS) and carbon disulfide (CS_2).

(m) *Fluid catalytic cracking unit* means a refinery process unit in which petroleum derivatives are continuously charged; hydrocarbon molecules in the presence of a catalyst suspended in a fluidized bed are fractured into smaller molecules, or react with a contact material suspended in a fluidized bed to improve feedstock quality for additional processing; and the catalyst or contact material is continuously regenerated by burning off coke and other deposits. The unit includes the riser, reactor, regenerator, air blowers, spent catalyst or contact material stripper, catalyst or contact material recovery equipment, and regenerator equipment for controlling air pollutant emissions and for heat recovery.

(n) *Fluid catalytic cracking unit catalyst regenerator* means one or more regenerators (multiple regenerators) which comprise that portion of the fluid catalytic cracking unit in which coke burn-off and catalyst or contact material regeneration occurs, and includes the regenerator combustion air blower(s).

(o) *Fresh feed* means any petroleum derivative feedstock stream charged directly into the riser or reactor of a fluid catalytic cracking unit except for petroleum derivatives recycled within the fluid catalytic cracking unit, fractionator, or gas recovery unit.

(p) *Contact material* means any substance formulated to remove metals, sulfur, nitrogen, or any other contaminant from petroleum derivatives.

(q) *Valid day* means a 24-hour period in which at least 18 valid hours of data are obtained. A "valid hour" is one in which at least 2 valid data points are obtained.

[39 FR 9315, Mar. 8, 1974, as amended at 43 FR 10868, Mar. 15, 1978; 44 FR 13481, Mar. 12, 1979; 45 FR 79453, Dec. 1, 1980; 54 FR 34027, Aug. 17, 1989]

§ 60.102 Standard for particulate matter.

Each owner or operator of any fluid catalytic cracking unit catalyst regenerator that is subject to the requirements of this subpart shall comply with the emission limitations set forth in this section on and after the date on which the initial performance test, required by § 60.8, is completed, but not later than 60 days after achieving the maximum production rate at which the fluid catalytic cracking unit catalyst regenerator will be operated, or 180 days after initial startup, whichever comes first.

(a) No owner or operator subject to the provisions of this subpart shall discharge or cause the discharge into the atmosphere from any fluid catalytic cracking unit catalyst regenerator:

(1) Particulate matter in excess of 1.0 kg/Mg (2.0 lb/ton) of coke burn-off in the catalyst regenerator.

(2) Gases exhibiting greater than 30 percent opacity, except for one six-minute average opacity reading in any one hour period.

(b) Where the gases discharged by the fluid catalytic cracking unit catalyst regenerator pass through an incinerator or waste heat boiler in which auxiliary or supplemental liquid or solid fossil fuel is burned, particulate matter in excess of that permitted by paragraph (a)(1) of this section may be emitted to the atmosphere, except that the incremental rate of particulate matter emissions shall not exceed 43.0 g/MJ (0.10

lb/million Btu) of heat input attributable to such liquid or solid fossil fuel.

[39 FR 9315, Mar. 8, 1974, as amended at 42 FR 32427, June 24, 1977, 42 FR 39389, Aug. 4, 1977; 43 FR 10868, Feb. 15, 1978; 54 FR 34027, Aug. 17, 1989; 65 FR 61753, Oct. 17, 2000]

§ 60.103 Standard for carbon monoxide.

Each owner or operator of any fluid catalytic cracking unit catalyst regenerator that is subject to the requirements of this subpart shall comply with the emission limitations set forth in this section on and after the date on which the initial performance test, required by §60.8, is completed, but not later than 60 days after achieving the maximum production rate at which the fluid catalytic cracking unit catalyst regenerator will be operated, or 180 days after initial startup, whichever comes first.

(a) No owner or operator subject to the provisions of this subpart shall discharge or cause the discharge into the atmosphere from any fluid catalytic cracking unit catalyst regenerator any gases that contain carbon monoxide (CO) in excess of 500 ppm by volume (dry basis).

[54 FR 34027, Aug. 17, 1989, as amended at 55 FR 40175, Oct. 2, 1990]

§ 60.104 Standards for sulfur oxides.

Each owner or operator that is subject to the requirements of this subpart shall comply with the emission limitations set forth in this section on and after the date on which the initial performance test, required by § 60.8, is completed, but not later than 60 days after achieving the maximum production rate at which the affected facility will be operated, or 180 days after initial startup, whichever comes first.

(a) No owner or operator subject to the provisions of this subpart shall:

(1) Burn in any fuel gas combustion device any fuel gas that contains hydrogen sulfide (H_2S) in excess of 230 mg/dscm (0.10 gr/dscf). The combustion in a flare of process upset gases or fuel gas that is released to the flare as a result of relief valve leakage or other emergency malfunctions is exempt from this paragraph.

(2) Discharge or cause the discharge of any gases into the atmosphere from any Claus sulfur recovery plant containing in excess of:

(i) For an oxidation control system or a reduction control system followed by incineration, 250 ppm by volume (dry basis) of sulfur dioxide (SO_2) at zero percent excess air.

(ii) For a reduction control system not followed by incineration, 300 ppm by volume of reduced sulfur compounds and 10 ppm by volume of hydrogen sulfide (H_2S), each calculated as ppm SO_2 by volume (dry basis) at zero percent excess air.

(b) Each owner or operator that is subject to the provisions of this subpart shall comply with one of the following conditions for each affected fluid catalytic cracking unit catalyst regenerator:

(1) With an add-on control device, reduce sulfur dioxide emissions to the atmosphere by 90 percent or maintain sulfur dioxide emissions to the atmosphere less than or equal to 50 ppm by volume (vppm), whichever is less stringent; or

(2) Without the use of an add-on control device, maintain sulfur oxides emissions calculated as sulfur dioxide to the atmosphere less than or equal to 9.8 kg/Mg (20 lb/ton) coke burn-off; or

(3) Process in the fluid catalytic cracking unit fresh feed that has a total sulfur content no greater than 0.30 percent by weight.

(c) Compliance with paragraph (b)(1), (b)(2), or (b)(3) of this section is determined daily on a 7-day rolling average basis using the appropriate procedures outlined in § 60 106.

(d) A minimum of 22 valid days of data shall be obtained every 30 rolling successive calendar days when complying with paragraph (b)(1) of this section.

[43 FR 10869, Mar. 15, 1978, as amended at 54 FR 34027, Aug. 17, 1989; 55 FR 40175, Oct. 2, 1990; 65 FR 61754, Oct. 17, 2000]

§ 60.105 Monitoring of emissions and operations.

(a) Continuous monitoring systems shall be installed, calibrated, maintained, and operated by the owner or operator subject to the provisions of this subpart as follows:

(1) For fluid catalytic cracking unit catalyst regenerators subject to § 60.102(a)(2), an instrument for continuously monitoring and recording the opacity of emissions into the atmosphere. The instrument shall be spanned at 60, 70, or 80 percent opacity.

(2) For fluid catalytic cracking unit catalyst regenerators subject to § 60 103(a), an instrument for continuously monitoring and recording the concentration by volume (dry basis) of CO emissions into the atmosphere, except as provided in paragraph (a)(2) (ii) of this section.

(i) The span value for this instrument is 1,000 ppm CO.

(ii) A CO continuous monitoring system need not be installed if the owner or operator demonstrates that the average CO emissions are less than 50 ppm (dry basis) and also files a written request for exemption to the Administrator and receives such an exemption. The demonstration shall consist of continuously monitoring CO emissions for 30 days using an instrument that shall meet the requirements of Performance Specification 4 of Appendix B of this part. The span value shall be 100 ppm CO instead of 1,000 ppm, and the relative accuracy limit shall be 10 percent of the average CO emissions or 5 ppm CO, whichever is greater. For instruments that are identical to Method 10 and employ the sample conditioning system of Method 10A, the alternative relative accuracy test procedure in § 10.1 of Performance Specification 2 may be used in place of the relative accuracy test.

(3) For fuel gas combustion devices subject to § 60.104(a)(1), an instrument for continuously monitoring and recording the concentration by volume (dry basis, zero percent excess air) of SO_2 emissions into the atmosphere (except where an H_2S monitor is installed under paragraph (a)(4) of this section). The monitor shall include an oxygen monitor for correcting the data for excess air.

(i) The span values for this monitor are 50 ppm SO_2 and 25 percent oxygen (O_2).

(ii) The SO_2 monitoring level equivalent to the H_2S standard under § 60.104(a)(1) shall be 20 ppm (dry basis, zero percent excess air).

(iii) The performance evaluations for this SO_2 monitor under § 60.13(c) shall use Performance Specification 2. Methods 6 or 6C and 3 or 3A shall be used for conducting the relative accuracy evaluations. Method 6 samples shall be taken at a flow rate of approximately 2 liters/min for at least 30 minutes. The relative accuracy limit shall be 20 percent or 4 ppm, whichever is greater, and the calibration drift limit shall be 5 percent of the established span value.

(iv) Fuel gas combustion devices having a common source of fuel gas may be monitored at only one location (i.e., after one of the combustion devices), if monitoring at this location accurately represents the S_2 emissions into the atmosphere from each of the combustion devices.

(4) In place of the SO_2 monitor in paragraph (a)(3) of this section, an instrument for continuously monitoring and recording the concentration (dry basis) of H_2S in fuel gases before being burned in any fuel gas combustion device.

(i) The span value for this instrument is 425 mg/dscm H_2S.

(ii) Fuel gas combustion devices having a common source of fuel gas may be monitored at only one location, if monitoring at this location accurately represents the concentration of H_2S in the fuel gas being burned.

(iii) The performance evaluations for this H_2S monitor under § 60.13(c) shall use Performance Specification 7. Method 11, 15, 15A, or 16 shall be used for conducting the relative accuracy evaluations.

(5) For Claus sulfur recovery plants with oxidation control systems or reduction control systems followed by incineration subject to § 60.104(a)(2)(i), an instrument for continuously monitoring and recording the concentration (dry basis, zero percent excess air) of SO_2 emissions into the atmosphere. The monitor shall include an oxygen monitor for correcting the data for excess air.

(i) The span values for this monitor are 500 ppm SO_2 and 25 percent O_2.

(ii) The performance evaluations for this SO_2 monitor under § 60.13(c) shall use Performance Specification 2. Methods 6 or 6C and 3 or 3A shall be used for conducting the relative accuracy evaluations.

(6) For Claus sulfur recovery plants with reduction control systems not followed by incineration subject to § 60.104(a)(2)(ii), an instrument for continuously monitoring and recording the concentration of reduced sulfur and O_2 emissions into the atmosphere. The reduced sulfur emissions shall be calculated as SO_2 (dry basis, zero percent excess air).

(i) The span values for this monitor are 450 ppm reduced sulfur and 25 percent O_2.

(ii) The performance evaluations for this reduced sulfur (and O_2) monitor under § 60.13(c) shall use Performance Specification 5 of Appendix B of this Part (and Performance Specification 3 of Appendix B of this Part for the O_2 analyzer). Methods 15 or 15A and Method 3 shall be used for conducting the relative accuracy evaluations. If Method 3 yields O_2 concentrations below 0.25 percent during the performance specification test, the O_2 concentration may be assumed to be zero and the reduced sulfur CEMS need not include an O_2 monitor.

(7) In place of the reduced sulfur monitor under paragraph (a)(6) of this section, an instrument using an air or O_2 dilution and oxidation system to convert the reduced sulfur to SO_2 for continuously monitoring and recording the concentration (dry basis, zero percent excess air) of the resultant SO_2 The monitor shall include an oxygen monitor for correcting the data for excess oxygen.

(i) The span values for this monitor are 375 ppm SO_2 and 25 percent O_2.

(ii) For reporting purposes, the SO_2 exceedance level for this monitor is 250 ppm (dry basis, zero percent excess air).

(iii) The performance evaluations for this SO_2 (and O_2) monitor under § 60.13(c) shall use Performance Specification 5. Methods 15 or 15A and Method 3 shall be used for conducting the relative accuracy evaluations.

(8) An instrument for continuously monitoring and recording concentrations of SO_2 in the gases at both the inlet and outlet of the SO_2 control device from any fluid catalytic cracking unit catalyst regenerator for which the owner or operator seeks to comply with § 60.104 (b)(1).

(i) The span value of the inlet monitor shall be set 125 percent of the maximum estimated hourly potential SO_2 emission concentration entering the control device, and the span value of the outlet monitor shall be set at 50 percent of the maximum estimated hourly potential sulfur dioxide emission concentration entering the control device.

(ii) The performance evaluations for these SO_2 monitors under § 60.13(c) shall use Performance Specification 2. Methods 6 or 6C and 3 or 3A shall be used for conducting the relative accuracy evaluations.

(9) An instrument for continuously monitoring and recording concentrations of SO_2 in the gases discharged into the atmosphere from any fluid catalytic cracking unit catalyst regenerator for which the owner or operator seeks to comply specifically with the 50 ppmv emission limit under § 60.104 (b)(1).

(i) The span value of the monitor shall be set at 50 percent of the maximum hourly potential SO_2emission concentration of the control device.

(ii) The performance evaluations for this SO_2 monitor under § 60.13 (c) shall use Performance Specification 2. Methods 6 or 6C and 3 or 3A shall be used for conducting the relative accuracy evaluations.

(10) An instrument for continuously monitoring and recording concentrations of oxygen (O_2) in the gases at both the inlet and outlet of the sulfur dioxide control device (or the outlet only if specifically complying with the 50 ppmv standard) from any fluid catalytic cracking unit catalyst regenerator for which the owner or operator has elected to comply with § 60.104(b)(1). The span of this continuous monitoring system shall be set at 10 percent.

(11) The continuous monitoring systems under paragraphs (a)(8), (a)(9), and (a)(10) of this section are operated and data recorded during all periods of operation of the affected facility including periods of startup, shutdown, or malfunction, except for continuous monitoring system breakdowns, repairs, calibration checks, and zero and span adjustments.

(12) The owner or operator shall use the following procedures to evaluate the continuous monitoring systems under paragraphs (a)(8), (a)(9), and (a)(10) of this section.

(i) Method 3 or 3A and Method 6 or 6C for the relative accuracy evaluations under the § 60.13(e) performance evaluation.

(ii) Appendix F, Procedure 1, including quarterly accuracy determinations and daily calibration drift tests.

(13) When seeking to comply with § 60.104(b)(1), when emission data are not obtained because of continuous monitoring system breakdowns, repairs, calibration checks and zero and span adjustments, emission data will be obtained by using one of the following methods to provide emission data for a minimum of 18 hours per day in at least 22 out of 30 rolling successive calendar days.

(i) The test methods as described in § 60.106(k);

(ii) A spare continuous monitoring system; or

(iii) Other monitoring systems as approved by the Administrator.

(b) [Reserved]

(c) The average coke burn-off rate (Mg (tons) per hour) and hours of operation shall be recorded daily for any fluid catalytic cracking unit catalyst regenerator subject to § 60.102, § 60.103, or § 60.104(b)(2).

(d) For any fluid catalytic cracking unit catalyst regenerator under § 60.102 that uses an incinerator-waste heat boiler to combust the exhaust gases from the catalyst regenerator, the owner or operator shall record daily the rate of combustion of liquid or solid fossil-fuels and the hours of operation during which liquid or solid fossil-fuels are combusted in the incinerator-waste heat boiler.

(e) For the purpose of reports under § 60.7(c), periods of excess emissions that shall be determined and reported are defined as follows:

Note: All averages, except for opacity, shall be determined as the arithmetic average of the applicable 1-hour averages, e.g., the rolling 3-hour average shall be determined as the arithmetic average of three contiguous 1-hour averages.

(1) *Opacity.* All 1-hour periods that contain two or more 6-minute periods during which the average opacity as measured by the continuous monitoring system under § 60.105(a)(1) exceeds 30 percent.

(2) *Carbon monoxide.* All 1-hour periods during which the average CO concentration as measured by the CO continuous monitoring system under § 60.105(a)(2) exceeds 500 ppm.

(3) *Sulfur dioxide from fuel gas combustion.* (i) All rolling 3-hour periods during which the average concentration of SO_2 as measured by the SO_2 continuous monitoring system under § 60.105(a)(3) exceeds 20 ppm (dry basis, zero percent excess air); or

(ii) All rolling 3-hour periods during which the average concentration of H_2S as measured by the H_2S continuous monitoring system under § 60.105(a)(4) exceeds 230 mg/dscm (0.10 gr/dscf).

(4) *Sulfur dioxide from Claus sulfur recovery plants.* (i) All 12- hour periods during which the average concentration of SO_2as measured by the SO_2 continuous monitoring system under § 60.105(a)(5) exceeds 250 ppm (dry basis, zero percent excess air); or

(ii) All 12-hour periods during which the average concentration of reduced sulfur (as SO_2) as measured by the reduced sulfur continuous monitoring system under §60.105(a)(6) exceeds 300 ppm; or

(iii) All 12-hour periods during which the average concentration of SO_2 as measured by the SO_2 continuous monitoring system under § 60.105(a)(7) exceeds 250 ppm (dry basis, zero percent excess air).

[39 FR 9315, Mar. 8, 1974, as amended at 40 FR 46259, Oct. 6, 1975; 42 FR 32427, June 24, 1977; 42 FR 39389, Aug. 4, 1977; 43 FR 10869, Mar. 15, 1978; 48 FR 23611, May 25, 1983; 50 FR 31701, Aug. 5, 1985; 54 FR 34028, Aug. 17, 1989; 55 FR 40175, Oct. 2, 1990; 65 FR 61754, Oct. 17, 2000]

§ 60.106 Test methods and procedures.

(a) In conducting the performance tests required in § 60.8, the owner or operator shall use as reference methods and procedures the test methods in appendix A of this part or other methods and procedures as specified in this section, except as provided in § 60.8(b).

(b) The owner or operator shall determine compliance with the particulate matter (PM) standards in § 60.102(a) as follows:

(1) The emission rate (E) of PM shall be computed for each run using the following equation:

$$E = \frac{c_s Q_{sd}}{K R_c}$$

Where:

E = Emission rate of PM, kg/Mg (lb/ton) of coke burn-off.

c_s = Concentration of PM, g/dscm (gr/dscf).

Q_{sd} = Volumetric flow rate of effluent gas, dscm/hr (dscf/ hr).

R_c = Coke burn-off rate, Mg/hr (ton/hr) coke.

K=Conversion factor, 1,000 g/kg (7,000 gr/lb).

(2) Method 5B or 5F is to be used to determine particulate matter emissions and associated moisture content from affected facilities without wet FGD systems; only Method 5B is to be used after wet FGD systems. The sampling time for each run shall be at least 60 minutes and the sampling rate shall be at least 0.015 dscm/min (0.53 dscf/min), except that shorter sampling times may be approved by the Administrator when process variables or other factors preclude sampling for at least 60 minutes.

(3) The coke burn-off rate (R_c) shall be computed for each run using the following equation:

$$R_c = K_1 Q_r(\%CO_2 + \%CO) - (K_2 Q_a - K_3 Q_r)[(\frac{\%CO}{2}) + (\%CO_2 + \%Osub2)]$$

Where:

R_c= Coke burn-off rate, Mg/hr (ton/hr).

Q_r = Volumetric flow rate of exhaust gas from catalyst regenerator before entering the emission control system, dscm/ min (dscf/min).

Q_a = Volumetric flow rate of air to FCCU regenerator, as determined from the fluid catalytic cracking unit control room instrumentation, dscm/min (dscf/min).

$\%CO_2$ = Carbon dioxide concentration, percent by volume (dry basis).

%CO = Carbon monoxide concentration, percent by volume (dry basis).

$\%O_2$= Oxygen concentration, percent by volume (dry basis).

K_1 = Material balance and conversion factor, 2.982×10^{-4} (Mg-min)/(hr-dscm-%) [9.31×10^{-6} (ton-min)/(hr-dscf-%)].

K2= Material balance and conversion factor, 2.088×10^{-3} (Mg-min)/(hr-dscm-%) [6.52×10^{-5} (ton-min)/(hr-dscf-%)].

K_3 = Material balance and conversion factor, 9.94×10^{-5} (Mg-min)/(hr-dscm-%) [3.1×10^{-6} (ton-min)/(hr-dscf-%)].

(i) Method 2 shall be used to determine the volumetric flow rate (Q_r).

(ii) The emission correction factor, integrated sampling and analysis procedure of Method 3B shall be used to determine CO_2, CO, and O_2 concentrations.

(4) Method 9 and the procedures of § 60.11 shall be used to determine opacity.

(c) If auxiliary liquid or solid fossil-fuels are burned in an incinerator-waste heat boiler, the owner or operator shall determine the emission rate of PM permitted in § 60.102(b) as follows:

(1) The allowable emission rate (E_s) of PM shall be computed for each run using the following equation:

$$E_s = F + A(\frac{H}{R_c})$$

Where:

E_s = Emission rate of PM allowed, kg/Mg (lb/ton) of coke burn-off in catalyst regenerator.

F=Emission standard, 1.0 kg/Mg (2.0 lb/ton) of coke burn-off in catalyst regenerator.

A = Allowable incremental rate of PM emissions, 7.5×10^{-4} kg/million J (0.10 lb/million Btu).

H = Heat input rate from solid or liquid fossil fuel, million J/hr (million Btu/hr).

R_c = Coke burn-off rate, Mg coke/hr (ton coke/hr).

(2) Procedures subject to the approval of the Administrator shall be used to determine the heat input rate.

(3) The procedure in paragraph (b)(3) of this section shall be used to determine the coke burn-off rate (R_c).

(d) The owner or operator shall determine compliance with the CO standard in § 60.103(a) by using the integrated sampling technique of Method 10 to determine the CO concentration (dry basis). The sampling time for each run shall be 60 minutes.

(e)(1) The owner or operator shall determine compliance with the H_2S standard in § 60.104(a)(1) as follows: Method 11, 15, 15A, or 16 shall be used to determine the H_2S concentration. The gases entering the sampling train should be at about atmospheric pressure. If the pressure in the refinery fuel gas lines is relatively high, a flow control valve may be used to reduce the pressure. If the line pressure is high enough to operate the sampling train without a vacuum pump, the pump may be eliminated from the sampling train. The sample shall be drawn from a point near the centroid of the fuel gas line.

(i) For Method 11, the sampling time and sample volume shall be at least 10 minutes and 0.010 dscm (0.35 dscf). Two samples of equal sampling times shall be taken at about 1-hour intervals. The arithmetic average of these two samples shall constitute a run. For most fuel gases, sampling times exceeding 20 minutes may result in depletion of the collection solution, although fuel gases containing low concentrations of H_2S may necessitate sampling for longer periods of time.

(ii) For Method 15 or 16, at least three injects over a 1-hour period shall constitute a run.

(iii) For Method 15A, a 1-hour sample shall constitute a run.

(2) Where emissions are monitored by § 60.105(a)(3), compliance with § 60.105(a)(1) shall be determined using Method 6 or 6C and Method 3 or 3A. A 1-hour sample shall constitute a run. Method 6 samples shall be taken at a rate of approximately 2 liters/min. The ppm correction factor (Method 6) and the sampling location in paragraph (f)(1) of this section apply. Method 4 shall be used to determine the moisture content of the gases. The sampling point for Method 4 shall be adjacent to the sampling point for Method 6 or 6C.

(f) The owner or operator shall determine compliance with the SO_2 and the H_2S and reduced sulfur standards in § 60.104(a)(2) as follows:

(1) Method 6 shall be used to determine the SO_2 concentration. The concentration in mg/dscm obtained by Method 6 or 6C is multiplied by 0.3754 to obtain the concentration in ppm. The sampling point in the duct shall be the centroid of the cross section if the cross-sectional area is less than 5.00 m^2 (53.8 ft^2) or at a point no closer to the walls than 1.00 m (39.4 in.) if the cross-sectional area is 5.00 m^2 or more and the centroid is more than 1 m from the wall. The sampling time and sample volume shall be at least 10 minutes and 0.010 dscm (0.35 dscf) for each sample. Eight samples of equal sampling times shall be taken at about 30-

minute intervals. The arithmetic average of these eight samples shall constitute a run. For Method 6C, a run shall consist of the arithmetic average of four 1-hour samples. Method 4 shall be used to determine the moisture content of the gases. The sampling point for Method 4 shall be adjacent to the sampling point for Method 6 or 6C. The sampling time for each sample shall be equal to the time it takes for two Method 6 samples. The moisture content from this sample shall be used to correct the corresponding Method 6 samples for moisture. For documenting the oxidation efficiency of the control device for reduced sulfur compounds, Method 15 shall be used following the procedures of paragraph (f)(2) of this section.

(2) Method 15 shall be used to determine the reduced sulfur and H_2S concentrations. Each run shall consist of 16 samples taken over a minimum of 3 hours. The sampling point shall be the same as that described for Method 6 in paragraph (f)(1) of this section. To ensure minimum residence time for the sample inside the sample lines, the sampling rate shall be at least 3.0 lpm (0.10 cfm). The SO_2equivalent for each run shall be calculated after being corrected for moisture and oxygen as the arithmetic average of the SO_2 equivalent for each sample during the run. Method 4 shall be used to determine the moisture content of the gases as the paragraph (f)(1) of this section. The sampling time for each sample shall be equal to the time it takes for four Method 15 samples.

(3) The oxygen concentration used to correct the emission rate for excess air shall be obtained by the integrated sampling and analysis procedure of Method 3 or 3A. The samples shall be taken simultaneously with the SO_2, reduced sulfur and H_2S, or moisture samples. The SO_2, reduced sulfur, and H_2S samples shall be corrected to zero percent excess air using the equation in paragraph (h)(6) of this section.

(g) Each performance test conducted for the purpose of determining compliance under § 60.104(b) shall consist of all testing performed over a 7-day period using Method 6 or 6C and Method 3 or 3A. To determine compliance, the arithmetic mean of the results of all the tests shall be compared with the applicable standard.

(h) For the purpose of determining compliance with § 60.104(b)(1), the following calculation procedures shall be used:

(1) Calculate each 1-hour average concentration (dry, zero percent oxygen, ppmv) of sulfur dioxide at both the inlet and the outlet to the add-on control device as specified in § 60.13(h). These calculations are made using the emission data collected under § 60.105(a).

(2) Calculate a 7-day average (arithmetic mean) concentration of sulfur dioxide for the inlet and for the outlet to the add-on control device using all of the 1-hour average concentration values obtained during seven successive 24-hour periods.

(3) Calculate the 7-day average percent reduction using the following equation:

$$R_{SO_2} = 100\frac{C_{SO_2(i)} - C_{SO_2(o)}}{C_{SO_2(i)}}$$

where:

Rso_2 = 7-day average sulfur dioxide emission reduction, percent

$Cso_2(i)$ = sulfur dioxide emission concentration determined in § 60.106(h)(2) at the inlet to the add-on control device, ppmv

$Cso_2(o)$ = sulfur dioxide emission concentration determined in § 60.106(h)(2) at the outlet to the add-on control device, ppmv

100 = conversion factor, decimal to percent

(4) Outlet concentrations of sulfur dioxide from the add-on control device for compliance with the 50 ppmv standard, reported on a dry, O_2-free basis, shall be calculated using the procedures outlined in § 60.106(h)(1) and (2) above, but for the outlet monitor only.

(5) If supplemental sampling data are used for determining the 7-day averages under paragraph (h) of this section and such data are not hourly averages, then the value obtained for each supplemental sample shall be assumed to represent the hourly average for each hour over which the sample was obtained.

(6) For the purpose of adjusting pollutant concentrations to zero percent oxygen, the following equation shall be used:

$$C_{adj} = C_{meas}\frac{20.9_c}{20.9 - \%O_2}$$

where:

C_{adj} = pollutant concentration adjusted to zero percent oxygen, ppm or g/dscm

C_{meas} = pollutant concentration measured on a dry basis, ppm or g/dscm

20.9_c = 20.9 percent oxygen-0.0 percent oxygen (defined oxygen correction basis), percent

20.9 = oxygen concentration in air, percent

$\%O_2$ = oxygen concentration measured on a dry basis, percent

(i) For the purpose of determining compliance with § 60.104(b)(2), the following reference methods and calculation procedures shall be used except as provided in paragraph (i)(12) of this section:

(1) One 3-hour test shall be performed each day.

(2) For gases released to the atmosphere from the fluid catalytic cracking unit catalyst regenerator:

(i) Method 8 as modified in § 60.106(i)(3) for moisture content and for the concentration of sulfur oxides calculated as sulfur dioxide,

(ii) Method 1 for sample and velocity traverses,

(iii) Method 2 calculation procedures (data obtained from Methods 3 and 8) for velocity and volumetric flow rate, and

(iv) Method 3 for gas analysis.

(3) Method 8 shall be modified by the insertion of a heated glass fiber filter between the probe and first impinger. The probe liner and glass fiber filter temperature shall be maintained above 160 ºC (320 ºF). The isopropanol impinger shall be eliminated. Sample recovery procedures described in Method 8 for container No. 1 shall be eliminated. The heated glass fiber filter also shall be excluded; however, rinsing of all connecting glassware after the heated glass fiber filter shall be retained and included in container No. 2. Sampled volume shall be at least 1 dscm.

(4) For Method 3, the integrated sampling technique shall be used.

(5) Sampling time for each run shall be at least 3 hours.

(6) All testing shall be performed at the same location. Where the gases discharged by the fluid catalytic cracking unit catalyst regenerator pass through an incinerator-waste heat boiler in which auxiliary or supplemental gaseous, liquid, or solid fossil fuel is burned, testing shall be conducted at a point between the regenerator outlet and the incinerator-waste heat boiler. An alternative sampling location after the waste heat boiler may be used if alternative coke burn-off rate equations, and, if requested, auxiliary/supplemental fuel SO_X credits, have been submitted to and approved by the Administrator prior to sampling.

(7) Coke burn-off rate shall be determined using the procedures specified under paragraph (b)(3) of this section, unless paragraph (i)(6) of this section applies.

(8) Calculate the concentration of sulfur oxides as sulfur dioxide using equation 8-3 in Section 6.5 of Method 8 to calculate and report the total concentration of sulfur oxides as sulfur dioxide (Cso_x).

(9) Sulfur oxides emission rate calculated as sulfur dioxide shall be determined for each test run by the following equation:

$$E_{SO_X} = \frac{C_{SO_X} Q_{sd}}{K}$$

Where:

E_{SOx} = sulfur oxides emission rate calculated as sulfur dioxide, kg/hr (lb/hr)

C_{SOx} = sulfur oxides emission concentration calculated as sulfur dioxide, g/dscm (gr/dscf)

Q_{sd} = dry volumetric stack gas flow rate corrected to standard conditions, dscm/hr (dscf/hr)

K=1,000 g/kg (7,000 gr/lb)

(10) Sulfur oxides emissions calculated as sulfur dioxide shall be determined for each test run by the following equation:

$$R_{SO_X} = \frac{E_{SO_X}}{R_c}$$

Where:

R_{SO_X} = Sulfur oxides emissions calculated as kg sulfur dioxide per Mg (lb/ton) coke burn-off.

E_{SO_X} = Sulfur oxides emission rate calculated as sulfur dioxide, kg/hr (lb/hr).

R_c= Coke burn-off rate, Mg/hr (ton/hr).

(11) Calculate the 7-day average sulfur oxides emission rate as sulfur dioxide per Mg (ton) of coke burn-off by dividing the sum of the individual daily rates by the number of daily rates summed.

(12) An owner or operator may, upon approval by the Administrator, use an alternative method for determining compliance with § 60.104(b)(2), as provided in § 60.8(b). Any requests for approval must include data to demonstrate to the Administrator that the alternative method would produce results adequate for the determination of compliance.

(j) For the purpose of determining compliance with § 60.104(b)(3), the following analytical methods and calculation procedures shall be used:

(1) One fresh feed sample shall be collected once per 8-hour period.

(2) Fresh feed samples shall be analyzed separately by using any one of the following applicable analytical test methods: ASTM D129-64, 78, or 95, ASTM D1552-83 or 95, ASTM D2622-87, 94, or 98, or ASTM D1266-87, 91, or 98. (These methods are incorporated by reference: see § 60.17.) The applicable range of some of these ASTM methods is not adequate to measure the levels of sulfur in some fresh feed samples. Dilution of samples prior to analysis with verification of the dilution ratio is acceptable upon prior approval of the Administrator.

(3) If a fresh feed sample cannot be collected at a single location, then the fresh feed sulfur content shall be determined as follows:

(i) Individual samples shall be collected once per 8-hour period for each separate fresh feed stream charged directly into the riser or reactor of the fluid catalytic cracking unit. For each sample location the fresh feed volumetric flow rate at the time of collecting the fresh feed sample shall be measured and recorded. The same method for measuring volumetric flow rate shall be used at all locations.

(ii) Each fresh feed sample shall be analyzed separately using the methods specified under paragraph (j)(2) of this section.

(iii) Fresh feed sulfur content shall be calculated for each 8-hour period using the following equation:

$$S_f = \sum_{i=1}^{n} \frac{S_i Q_i}{Q_f}$$

where:

S_f= fresh feed sulfur content expressed in percent by weight of fresh feed.

n = number of separate fresh feed streams charged directly to the riser or reactor of the fluid catalytic cracking unit.

Q_f= total volumetric flow rate of fresh feed charged to the fluid catalytic cracking unit.

S_i = fresh feed sulfur content expressed in percent by weight of fresh feed for the "ith" sampling location.

Q_i = volumetric flow rate of fresh feed stream for the "ith" sampling location.

(4) Calculate a 7-day average (arithmetic mean) sulfur content of the fresh feed using all of the fresh feed sulfur content values obtained during seven successive 24-hour periods.

(k) The test methods used to supplement continuous monitoring system data to meet the minimum data requirements in § 60.104(d) will be used as described below or as otherwise approved by the Administrator.

(1) Methods 6, 6B, or 8 are used. The sampling location(s) are the same as those specified for the monitor.

(2) For Method 6, the minimum sampling time is 20 minutes and the minimum sampling volume is 0.02 dscm (0.71 dscf) for each sample. Samples are taken at approximately 60-minute intervals. Each sample represents a 1-hour average. A minimum of 18 valid samples is required to obtain one valid day of data.

(3) For Method 6B, collection of a sample representing a minimum of 18 hours is required to obtain one valid day of data.

(4) For Method 8, the procedures as outlined in this section are used. The equivalent of 16 hours of sampling is required to obtain one valid day of data.

[39 FR 9315, Mar. 8, 1974, as amended at 43 FR 10869, Mar. 15, 1978; 51 FR 42842, Nov. 26, 1986; 52 FR 20392, June 1, 1987; 53 FR 41333, Oct. 21, 1988; 54 FR 34028, Aug. 17, 1989; 55 FR 40176, Oct. 2, 1990; 56 FR 4176, Feb. 4, 1991; 65 FR 61754, Oct. 17, 2000]

§ 60.107 Reporting and recordkeeping requirements.

(a) Each owner or operator subject to § 60.104(b) shall notify the Administrator of the specific provisions of § 60.104(b) with which the owner or operator seeks to comply. Notification shall be submitted with the notification of initial startup required by § 60.7(a)(3). If an owner or operator elects at a later date to comply with an alternative provision of § 60.104(b), then the Administrator shall be notified by the owner or operator in the report described in paragraph (c) of this section.

(b) Each owner or operator subject to § 60.104(b) shall record and maintain the following information:

(1) If subject to § 60.104(b)(1),

(i) All data and calibrations from continuous monitoring systems located at the inlet and outlet to the control device, including the results of the daily drift tests and quarterly accuracy assessments required under appendix F, Procedure 1;

(ii) Measurements obtained by supplemental sampling (refer to § 60.105(a)(13) and § 60.106(k)) for meeting minimum data requirements; and

(iii) The written procedures for the quality control program required by appendix F, Procedure 1.

(2) If subject to § 60.104(b)(2), measurements obtained in the daily Method 8 testing, or those obtained by alternative measurement methods, if § 60.106(i)(12) applies.

(3) If subject to § 60.104(b)(3), data obtained from the daily feed sulfur tests.

(4) Each 7-day rolling average compliance determination.

(c) Each owner or operator subject to § 60.104(b) shall submit a report except as provided by paragraph (d) of this section. The following information shall be contained in the report:

(1) Any 7-day period during which:

(i) The average percent reduction and average concentration of sulfur dioxide on a dry, O_2-free basis in the gases discharged to the atmosphere from any fluid cracking unit catalyst regenerator for which the owner or operator seeks to comply with § 60.104(b)(1) is below 90 percent and above 50 vppm, as measured by the continuous monitoring system prescribed under § 60.105(a)(8), or above 50 vppm, as measured by the outlet continuous monitoring system prescribed under § 60.105(a)(9). The average percent reduction and average sulfur dioxide concentration shall be determined using the procedures specified under § 60.106(h);

(ii) The average emission rate of sulfur dioxide in the gases discharged to the atmosphere from any fluid catalytic cracking unit catalyst regenerator for which the owner or operator seeks to comply with § 60.104(b)(2) exceeds 9.8 kg SO_X per 1,000 kg coke burn-off, as measured by the daily testing prescribed under § 60.106(i). The average emission rate shall be determined using the procedures specified under § 60.106(i); and

(iii) The average sulfur content of the fresh feed for which the owner or operator seeks to comply with § 60.104(b)(3) exceeds 0.30 percent by weight. The fresh feed sulfur content, a 7-day rolling average, shall be determined using the procedures specified under § 60.106(j).

(2) Any 30-day period in which the minimum data requirements specified in § 60.104(d) are not obtained.

(3) For each 7-day period during which an exceedance has occurred as defined in paragraphs (c)(1)(i) through (c)(1)(iii) and (c)(2) of this section:

(i) The date that the exceedance occurred;

(ii) An explanation of the exceedance;

(iii) Whether the exceedance was concurrent with a startup, shutdown, or malfunction of the fluid catalytic cracking unit or control system; and

(iv) A description of the corrective action taken, if any.

(4) If subject to § 60.104(b)(1),

(i) The dates for which and brief explanations as to why fewer than 18 valid hours of data were obtained for the inlet continuous monitoring system;

(ii) The dates for which and brief explanations as to why fewer than 18 valid hours of data were obtained for the outlet continuous monitoring system;

(iii) Identification of times when hourly averages have been obtained based on manual sampling methods;

(iv) Identification of the times when the pollutant concentration exceeded full span of the continuous monitoring system; and

(v) Description of any modifications to the continuous monitoring system that could affect the ability of the continuous monitoring system to comply with Performance Specifications 2 or 3.

(vi) Results of daily drift tests and quarterly accuracy assessments as required under appendix F, Procedure 1.

(5) If subject to § 60.104(b)(2), for each day in which a Method 8 sample result required by § 60.106(i) was not obtained, the date for which and brief explanation as to why a Method 8 sample result was not obtained, for approval by the Administrator.

(6) If subject to § 60.104(b)(3), for each 8-hour period in which a feed sulfur measurement required by § 60.106(j) was not obtained, the date for which and brief explanation as to why a feed sulfur measurement was not obtained, for approval by the Administrator.

(d) For any periods for which sulfur dioxide or oxides emissions data are not available, the owner or operator of the affected facility shall submit a signed statement indicating if any changes were made in operation of the emission control system during the period of data unavailability which could affect the ability of the system to meet the applicable emission limit. Operations of the control system and affected facility during periods of data unavailability are to be compared with operation of the control system and affected facility before and following the period of data unavailability.

(e) The owner or operator of an affected facility shall submit the reports required under this subpart to the Administrator semiannually for each six-month period. All semiannual reports shall be postmarked by the 30th day following the end of each six-month period.

(f) The owner or operator of the affected facility shall submit a signed statement certifying the accuracy and completeness of the information contained in the report.

[54 FR 34029, Aug. 17, 1989, as amended at 55 FR 40178, Oct. 2, 1990; 64 FR 7465, Feb. 12, 1999; 65 FR 61755, Oct. 17, 2000]

§ 60.108 Performance test and compliance provisions.

(a) Section 60.8(d) shall apply to the initial performance test specified under paragraph (c) of this section, but not to the daily performance tests required thereafter as specified in § 60.108(d). Section 60.8(f) does not apply when determining compliance with the standards specified under § 60.104(b). Performance tests conducted for the purpose of determining compliance under § 60.104(b) shall be conducted according to the applicable procedures specified under § 60.106.

(b) Owners or operators who seek to comply with § 60.104(b)(3) shall meet that standard at all times, including periods of startup, shutdown, and malfunctions.

(c) The initial performance test shall consist of the initial 7-day average calculated for compliance with § 60.104(b)(1), (b)(2), or (b)(3).

(d) After conducting the initial performance test prescribed under § 60.8, the owner or operator of a fluid catalytic cracking unit catalyst regenerator subject to § 60.104(b) shall conduct a performance test for each successive 24-hour period thereafter. The daily performance tests shall be conducted according to the appropriate procedures specified under § 60.106. In the event that a sample collected under § 60.106(i) or (j) is accidentally lost or conditions occur in which one of the samples must be discontinued because of forced shutdown, failure of an irreplaceable portion of the sample train, extreme meteorological conditions, or other circumstances, beyond the owner or operators§ control, compliance may be determined using available data for the 7-day period.

(e) Each owner or operator subject to § 60.104(b) who has demonstrated compliance with one of the provisions of § 60.104(b) but a later date seeks to comply with another of the provisions of § 60.104(b) shall begin conducting daily performance tests as specified under paragraph (d) of this section immediately upon electing to become subject to one of the other provisions of § 60.104(b). The owner or operator shall furnish the Administrator with a written notification of the change in the semiannual report required by § 60.107(e).

[54 FR 34030, Aug. 17, 1989, as amended at 55 FR 40178, Oct. 2, 1990; 64 FR 7466, Feb. 12, 1999]

§ 60.109 Delegation of authority.

(a) In delegating implementation and enforcement authority to a State under section 111(c) of the Act, the authorities contained in paragraph (b) of this section shall be retained by the Administrator and not transferred to a State.

(b) Authorities which shall not be delegated to States:

(1) Section 60.105(a)(13)(iii),

(2) Section 60.106(i)(12).

[54 FR 34031, Aug. 17, 1989, as amended at 55 FR 40178, Oct. 2, 1990]

APPENDIX B

40 CFR 60 SUBPARTS GGG AND VV

Subpart GGG-Standards of Performance for Equipment Leaks of VOC in Petroleum Refineries

Source: 49 FR 22606, May 30, 1984, unless otherwise noted.

§ 60.590 Applicability and designation of affected facility.

(a)(1) The provisions of this subpart apply to affected facilities in petroleum refineries.

(2) A compressor is an affected facility.

(3) The group of all the equipment (defined in §60.591) within a process unit is an affected facility.

(b) Any affected facility under paragraph (a) of this section that commences construction or modification after January 4, 1983, is subject to the requirements of this subpart.

(c) Addition or replacement of equipment (defined in §60.591) for the purpose of process improvement which is accomplished without a capital expenditure shall not by itself be considered a modification under this subpart.

(d) Facilities subject to subpart VV or subpart KKK of 40 CFR part 60 are excluded from this subpart.

§ 60.591 Definitions.

As used in this subpart, all terms not defined herein shall have the meaning given them in the act, in subpart A of part 60, or in subpart VV of part 60, and the following terms shall have the specific meanings given them.

Alaskan North Slope means the approximately 69,000 square mile area extending from the Brooks Range to the Arctic Ocean.

Equipment means each valve, pump, pressure relief device, sampling connection system, open-ended valve or line, and flange or other connector in VOC service. For the purposes of recordkeeping and reporting only, compressors are considered equipment.

In hydrogen service means that a compressor contains a process fluid that meets the conditions specified in §60.593(b).

In light liquid service means that the piece of equipment contains a liquid that meets the conditions specified in §60.593(c).

Petroleum means the crude oil removed from the earth and the oils derived from tar sands, shale, and coal.

Petroleum refinery means any facility engaged in producing gasoline, kerosene, distillate fuel oils, residual fuel oils, lubricants, or other products through the distillation of petroleum, or through the redistillation, cracking, or reforming of unfinished petroleum derivatives.

Process unit means components assembled to produce intermediate or final products from petroleum, unfinished petroleum derivatives, or other intermediates; a process unit can operate independently if supplied with sufficient feed or raw materials and sufficient storage facilities for the product.

§ 60.592 Standards.

(a) Each owner or operator subject to the provisions of this subpart shall comply with the requirements of §60.482-1 to 60.482-10 as soon as practicable, but no later than 180 days after initial startup.

(b) An owner or operator may elect to comply with the requirements of §60.483-1 and 60.483-2.

(c) An owner or operator may apply to the Administrator for a determination of equivalency for any means of emission limitation that achieves a reduction in emissions of VOC at least equivalent to the reduction in emissions of VOC achieved by the controls required in this subpart. In doing so, the owner or operator shall comply with requirements of §60.484.

(d) Each owner or operator subject to the provisions of this subpart shall comply with the provisions of §60.485 except as provided in §60.593.

(e) Each owner or operator subject to the provisions of this subpart shall comply with the provisions of §60.486 and 60.487.

§ 60.593 Exceptions.

(a) Each owner or operator subject to the provisions of this subpart may comply with the following exceptions to the provisions of subpart VV.

(b)(1) Compressors in hydrogen service are exempt from the requirements of § 60.592 if an owner or operator demonstrates that a compressor is in hydrogen service.

(2) Each compressor is presumed not be be in hydrogen service unless an owner or operator demonstrates that the piece of equipment is in hydrogen service. For a piece of equipment to be considered in hydrogen service, it must be determined that the percent hydrogen content can be reasonably expected always to exceed 50 percent by volume. For purposes of determining the percent hydrogen content in the process fluid that is contained in or contacts a compressor, procedures that conform to the general method described in ASTM E260-73, 91, or 96, E168-67, 77, or 92, or E169-63, 77, or 93 (incorporated by reference as specified in § 60.17) shall be used.

(3)(i) An owner or operator may use engineering judgment rather than procedures in paragraph (b)(2) of this section to demonstrate that the percent content exceeds 50 percent by volume, provided the engineering judgment demonstrates that the content clearly exceeds 50 percent by volume. When an owner or operator and the Administrator do not agree on whether a piece of equipment is in hydrogen service, however, the procedures in paragraph (b)(2) shall be used to resolve the disagreement.

(ii) If an owner or operator determines that a piece of equipment is in hydrogen service, the determination can be revised only after following the procedures in paragraph (b)(2).

(c) Any existing reciprocating compressor that becomes an affected facility under provisions of § 60.14 or § 60.15 is exempt from § 60.482 (a), (b), (c), (d), (e), and (h) provided the owner or operator demonstrates that recasting the distance piece or replacing the compressor are the only options available to bring the compressor into compliance with the provisions of § 60.482 (a), (b), (c), (d), (e), and (h).

(d) An owner or operator may use the following provision in addition to § 60.485(e): Equipment is in light liquid service if the percent evaporated is greater than 10 percent at 150°C as determined by ASTM Method D86-78, 82, 90, 95, or 96 (incorporated by reference as specified in § 60.18).

(e) Pumps in light liquid service and valves in gas/vapor and light liquid service within a process unit that is located in the Alaskan North Slope are exempt from the requirements of § 60.482-2 and § 60.482-7.

[49 FR 22606, May 30, 1984, as amended at 65 FR 61768, Oct. 17, 2000]

Subpart VV – Standards of Performance for Equipment Leaks of VOC in the Synthetic Organic Chemicals Manufacturing Industry

Source: 48 FR 48335, Oct. 18, 1983, unless otherwise noted.

§60.480 Applicability and designation of affected facility.

(a)(1) The provisions of this subpart apply to affected facilities in the synthetic organic chemicals manufacturing industry.

(2) The group of all equipment (defined in §60.481) within a process unit is an affected facility.

(b) Any affected facility under paragraph (a) of this section that commences construction or modification after January 5, 1981, shall be subject to the requirements of this subpart.

(c) Addition or replacement of equipment for the purpose of process improvement which is accomplished without a capital expenditure shall not by itself be considered a modification under this subpart.

(d)(1) If an owner or operator applies for one or more of the exemptions in this paragraph, then the owner or operator shall maintain records as required in §60.486(i).

(2) Any affected facility that has the design capacity to produce less than 1,000 Mg/yr (1,102 ton/yr) is exempt from §60.482.

(3) If an affected facility produces heavy liquid chemicals only from heavy liquid feed or raw materials, then it is exempt from §60.482.

(4) Any affected facility that produces beverage alcohol is exempt from §60.482.

(5) Any affected facility that has no equipment in VOC service is exempt from §60.482.

(e) *Alternative means of compliance* --

(1) *Option to comply with part 65.* Owners or operators may choose to comply with the provisions of 40 CFR part 65, subpart F, to satisfy the requirements of §§60.482 through 60.487 for an affected facility. When choosing to comply with 40 CFR part 65, subpart F, the requirements of §60.485(d), (e), and (f), and §60.486(i) and (j) still apply. Other provisions applying to an owner or operator who chooses to comply with 40 CFR part 65 are provided in 40 CFR 65.1.

(2) *Part 60, subpart A.* Owners or operators who choose to comply with 40 CFR part 65, subpart F must also comply with §§§§60.1, 60.2, 60.5, 60.6, 60.7(a)(1) and (4), 60.14, 60.15, and 60.16 for that equipment. All sections and paragraphs of subpart A of this part that are not mentioned in this paragraph (e)(2) do not apply to owners or operators of equipment subject to this subpart complying with 40 CFR part 65, subpart F, except that provisions required to be met prior to implementing 40 CFR part 65 still apply. Owners and operators who choose to comply with 40 CFR part 65, subpart F, must comply with 40 CFR part 65, subpart A.

[48 FR 48335, Oct. 18, 1983, as amended at 49 FR 22607, May 30, 1984; 65 FR 61762, Oct. 17, 2000; 65 FR 78276, Dec. 14, 2000]

§ 60.481 Definitions.

As used in this subpart, all terms not defined herein shall have the meaning given them in the Act or in subpart A of part 60, and the following terms shall have the specific meanings given them.

Capital expenditure means, in addition to the definition in 40 CFR part 60.2, an expenditure for a physical or operational change to an existing facility that:

(a) Exceeds P, the product of the facility's replacement cost, R, and an adjusted annual asset guideline repair allowance, A, as reflected by the following equation:

P = R x A, where

(1) The adjusted annual asset guideline repair allowance, A, is the product of the percent of the replacement cost, Y, and the applicable basic annual asset guideline repair allowance, B, divided by 100 as reflected by the following equation:

$$A = Y \times (B \div 100);$$

(2) The percent Y is determined from the following equation: Y = 1.0-0.575 log X, where X is 1982 minus the year of construction; and

(3) The applicable basic annual asset guideline repair allowance, B, is selected from the following table consistent with the applicable subpart:

TABLE FOR DETERMINING APPLICABLE FOR B

Subpart applicable to facility	Value of B to be used in equation
VV	12.5
DDD	12.5
GGG	7.0
KKK	4.5

Closed vent system means a system that is not open to the atmosphere and that is composed of hard-piping, ductwork, connections, and, if necessary, flow-inducing devices that transport gas or vapor from a piece or pieces of equipment to a control device or back to a process.

Connector means flanged, screwed, welded, or other joined fittings used to connect two pipe lines or a pipe line and a piece of process equipment.

Control device means an enclosed combustion device, vapor recovery system, or flare.

Distance piece means an open or enclosed casing through which the piston rod travels, separating the compressor cylinder from the crankcase.

Double block and bleed system means two block valves connected in series with a bleed valve or line that can vent the line between the two block valves.

Duct work means a conveyance system such as those commonly used for heating and ventilation systems. It is often made of sheet metal and often has sections connected by screws or crimping. Hard-piping is not ductwork.

Equipment means each pump, compressor, pressure relief device, sampling connection system, open-ended valve or line, valve, and flange or other connector in VOC service and any devices or systems required by this subpart.

First attempt at repair means to take rapid action for the purpose of stopping or reducing leakage of organic material to atmosphere using best practices.

Fuel gas means gases that are combusted to derive useful work or heat.

Fuel gas system means the offsite and onsite piping and flow and pressure control system that gathers gaseous stream(s) generated by onsite operations, may blend them with other sources of gas, and transports the gaseous stream for use as fuel gas in combustion devices or in-process combustion equipment, such as furnaces and gas turbines, either singly or in combination.

Hard-piping means pipe or tubing that is manufactured and properly installed using good engineering judgement and standards such as ASME B31.3, Process Piping (available from the American Society of Mechanical Engineers, PO Box 2900, Fairfield, NJ 07007-2900).

In gas/vapor service means that the piece of equipment contains process fluid that is in the gaseous state at operating conditions.

In heavy liquid service means that the piece of equipment is not in gas/vapor service or in light liquid service.

In light liquid service means that the piece of equipment contains a liquid that meets the conditions specified in §60.485(e).

In-situ sampling systems means nonextractive samplers or in-line samplers.

In vacuum service means that equipment is operating at an internal pressure which is at least 5 kilopascals (kPa)(0.7 psia) below ambient pressure.

In VOC service means that the piece of equipment contains or contacts a process fluid that is at least 10 percent VOC by weight. (The provisions of §60.485(d) specify how to determine that a piece of equipment is not in VOC service.)

Liquids dripping means any visible leakage from the seal including spraying, misting, clouding, and ice formation.

Open-ended valve or line means any valve, except safety relief valves, having one side of the valve seat in contact with process fluid and one side open to the atmosphere, either directly or through open piping.

Pressure release means the emission of materials resulting from system pressure being greater than set pressure of the pressure relief device.

Process improvement means routine changes made for safety and occupational health requirements, for energy savings, for better utility, for ease of maintenance and operation, for correction of design deficiencies, for bottleneck removal, for changing product requirements, or for environmental control.

Process unit means components assembled to produce, as intermediate or final products, one or more of the chemicals listed in §60.489 of this part. A process unit can operate independently if supplied with sufficient feed or raw materials and sufficient storage facilities for the product.

Process unit shutdown means a work practice or operational procedure that stops production from a process unit or part of a process unit. An unscheduled work practice or operational procedure that stops production from a process unit or part of a process unit for less than 24 hours is not a process unit shutdown. The use of spare equipment and technically feasible bypassing of equipment without stopping production are not process unit shutdowns.

Quarter means a 3-month period; the first quarter concludes on the last day of the last full month during the 180 days following initial startup.

Repaired means that equipment is adjusted, or otherwise altered, in order to eliminate a leak as indicated by one of the following: an instrument reading of 10,000 ppm or greater, indication of liquids dripping, or indication by a sensor that a seal or barrier fluid system has failed.

Replacement cost means the capital needed to purchase all the depreciable components in a facility.

Sampling connection system means an assembly of equipment within a process unit used during periods of representative operation to take samples of the process fluid. Equipment used to take nonroutine grab samples is not considered a sampling connection system.

Sensor means a device that measures a physical quantity or the change in a physical quantity such as temperature, pressure, flow rate, pH, or liquid level.

Synthetic organic chemicals manufacturing industry means the industry that produces, as intermediates or final products, one or more of the chemicals listed in §60.489.

Volatile organic compounds or VOC means, for the purposes of this subpart, any reactive organic compounds as defined in §60.2 Definitions.

[48 FR 48335, Oct. 18, 1983, as amended at 49 FR 22607, May 30, 1984; 49 FR 26738, June 29, 1984; 60 FR 43258, Aug. 18, 1995; 65 FR 61762, Oct. 17, 2000; 65 FR 78276, Dec. 14, 2000]

§ 60.482-1 Standards: General.

(a) Each owner or operator subject to the provisions of this subpart shall demonstrate compliance with the requirements of §60.482-1 through §60.482-10 or §60.480(e) for all equipment within 180 days of initial startup.

(b) Compliance with §§60.482-1 to 60.482-10 will be determined by review of records and reports, review of performance test results, and inspection using the methods and procedures specified in §60.485.

(c)(1) An owner or operator may request a determination of equivalence of a means of emission limitation to the requirements of §§60.482-2, 60.482-3, 60.482-5, 60.482-6, 60.482-7, 60.482-8, and 60.482-10 as provided in §60.484.

(2) If the Administrator makes a determination that a means of emission limitation is at least equivalent to the requirements of §§60.482-2, 60.482-3, 60.482-5, 60.482-6, 60.482-7, 60.482-8, or 60.482-10, an owner or operator shall comply with the requirements of that determination.

(d) Equipment that is in vacuum service is excluded from the requirements of §§60.482-2 to 60.482-10 if it is identified as required in §60.486(e)(5).

[48 FR 48335, Oct. 18, 1983, as amended at 49 FR 22608, May 30, 1984, 65 FR 78276, Dec. 14, 2000]

§60.482-2 Standards: Pumps in light liquid service.

(a)(1) Each pump in light liquid service shall be monitored monthly to detect leaks by the methods specified in §60.485(b), except as provided in §60.482-1(c) and paragraphs (d), (e), and (f) of this section.

(2) Each pump in light liquid service shall be checked by visual inspection each calendar week for indications of liquids dripping from the pump seal.

(b)(1) If an instrument reading of 10,000 ppm or greater is measured, a leak is detected.

(2) If there are indications of liquids dripping from the pump seal, a leak is detected.

(c)(1) When a leak is detected, it shall be repaired as soon as practicable, but not later than 15 calendar days after it is detected, except as provided in §60.482-9.

(2) A first attempt at repair shall be made no later than 5 calendar days after each leak is detected.

(d) Each pump equipped with a dual mechanical seal system that includes a barrier fluid system is exempt from the requirements of paragraph (a), provided the following requirements are met:

(1) Each dual mechanical seal system is:

(i) Operated with the barrier fluid at a pressure that is at all times greater than the pump stuffing box pressure; or

(ii) Equipment with a barrier fluid degassing reservoir that is routed to a process or fuel gas system or connected by a closed vent system to a control device that complies with the requirements of §60.482-10; or

(iii) Equipped with a system that purges the barrier fluid into a process stream with zero VOC emissions to the atmosphere.

(2) The barrier fluid system is in heavy liquid service or is not in VOC service.

(3) Each barrier fluid system is equipped with a sensor that will detect failure of the seal system, the barrier fluid system, or both.

(4) Each pump is checked by visual inspection, each calendar week, for indications of liquids dripping from the pump seals.

(5)(i) Each sensor as described in paragraph (d)(3) is checked daily or is equipped with an audible alarm, and

(ii) The owner or operator determines, based on design considerations and operating experience, a criterion that indicates failure of the seal system, the barrier fluid system, or both.

(6)(i) If there are indications of liquids dripping from the pump seal or the sensor indicates failure of the seal system, the barrier fluid system, or both based on the criterion determined in paragraph (d)(5)(ii), a leak is detected.

(ii) When a leak is detected, it shall be repaired as soon as practicable, but not later than 15 calendar days after it is detected, except as provided in §60.482-9.

(iii) A first attempt at repair shall be made no later than 5 calendar days after each leak is detected.

(e) Any pump that is designated, as described in §§60.486(e)(1) and (2), for no detectable emission, as indicated by an instrument reading of less than 500 ppm above background, is exempt from the requirements of paragraphs (a), (c), and (d) of this section if the pump:

(1) Has no externally actuated shaft penetrating the pump housing,

(2) Is demonstrated to be operating with no detectable emissions as indicated by an instrument reading of less than 500 ppm above background as measured by the methods specified in §60.485(c), and

(3) Is tested for compliance with paragraph (e)(2) of this section initially upon designation, annually, and at other times requested by the Administrator.

(f) If any pump is equipped with a closed vent system capable of capturing and transporting any leakage from the seal or seals to a process or to a fuel gas system or to a control device that complies with the requirements of §60.482-10, it is exempt from paragraphs (a) through (e) of this section.

(g) Any pump that is designated, as described in §60.486(f)(1), as an unsafe-to-monitor pump is exempt from the monitoring and inspection requirements of paragraphs (a) and (d)(4) through (6) of this section if:

(1) The owner or operator of the pump demonstrates that the pump is unsafe-to-monitor because monitoring personnel would be exposed to an immediate danger as a

consequence of complying with paragraph (a) of this section; and

(2) The owner or operator of the pump has a written plan that requires monitoring of the pump as frequently as practicable during safe-to-monitor times but not more frequently than the periodic monitoring schedule otherwise applicable, and repair of the equipment according to the procedures in paragraph (c) of this section if a leak is detected.

(h) Any pump that is located within the boundary of an unmanned plant site is exempt from the weekly visual inspection requirement of paragraphs (a)(2) and (d)(4) of this section, and the daily requirements of paragraph (d)(5) of this section, provided that each pump is visually inspected as often as practicable and at least monthly.

[48 FR 48335, Oct. 18, 1983, as amended at 65 FR 61762, Oct. 17, 2000; 65 FR 78276, Dec. 14, 2000]

§60.482-3 Standards: Compressors.

(a) Each compressor shall be equipped with a seal system that includes a barrier fluid system and that prevents leakage of VOC to the atmosphere, except as provided in §60.482-1(c) and paragraph (h) and (i) of this section.

(b) Each compressor seal system as required in paragraph (a) shall be:

(1) Operated with the barrier fluid at a pressure that is greater than the compressor stuffing box pressure; or

(2) Equipped with a barrier fluid system degassing reservoir that is routed to a process or fuel gas system or connected by a closed vent system to a control device that complies with the requirements of §60.482-10; or

(3) Equipped with a system that purges the barrier fluid into a process stream with zero VOC emissions to the atmosphere.

(c) The barrier fluid system shall be in heavy liquid service or shall not be in VOC service.

(d) Each barrier fluid system as described in paragraph (a) shall be equipped with a sensor that will detect failure of the seal system, barrier fluid system, or both.

(e)(1) Each sensor as required in paragraph (d) shall be checked daily or shall be equipped with an audible alarm.

(2) The owner or operator shall determine, based on design considerations and operating experience, a criterion that indicates failure of the seal system, the barrier fluid system, or both.

(f) If the sensor indicates failure of the seal system, the barrier system, or both based on the criterion determined under paragraph (e)(2), a leak is detected.

(g)(1) When a leak is detected, it shall be repaired as soon as practicable, but not later than 15 calendar days after it is detected, except as provided in §60.482-9.

(2) A first attempt at repair shall be made no later than 5 calendar days after each leak is detected.

(h) A compressor is exempt from the requirements of paragraphs (a) and (b) of this section, if it is equipped with a closed vent system to capture and transport leakage from the compressor drive shaft back to a process or fuel gas system or to a control device that complies with the requirements of §60.482-10, except as provided in paragraph (i) of this section.

(i) Any compressor that is designated, as described in §§60.486(e) (1) and (2), for no detectable emissions, as indicated by an instrument reading of less than 500 ppm above background, is exempt from the requirements of paragraphs (a)-(h) if the compressor:

(1) Is demonstrated to be operating with no detectable emissions, as indicated by an instrument reading of less than 500 ppm above background, as measured by the methods specified in §60.485(c); and

(2) Is tested for compliance with paragraph (i)(1) of this section initially upon designation, annually, and at other times requested by the Administrator.

(j) Any existing reciprocating compressor in a process unit which becomes an affected facility under provisions of §60.14 or §60.15 is exempt from §§60.482(a), (b), (c), (d), (e), and (h), provided the owner or operator demonstrates that recasting the distance piece or replacing the compressor are the only options available to bring the compressor into compliance with the provisions of paragraphs (a) through (e) and (h) of this section.

[48 FR 48335, Oct. 18, 1983, as amended at 65 FR 61762, Oct. 17, 2000; 65 FR 78277, Dec. 14, 2000]

§60.482-4 Standards: Pressure relief devices in gas/vapor service.

(a) Except during pressure releases, each pressure relief device in gas/vapor service shall be operated with no detectable emissions, as indicated by an instrument reading of less than 500 ppm above background, as determined by the methods specified in §60.485(c).

(b)(1) After each pressure release, the pressure relief device shall be returned to a condition of no detectable emissions, as indicated by an instrument reading of less than 500 ppm above background, as soon as practicable, but no later than 5 calendar days after the pressure release, except as provided in §60.482-9.

(2) No later than 5 calendar days after the pressure release, the pressure relief device shall be monitored to confirm the conditions of no detectable emissions, as indicated by an instrument reading of less than 500 ppm above background, by the methods specified in §60.485(c).

(c) Any pressure relief device that is routed to a process or fuel gas system or equipped with a closed vent system capable of capturing and transporting leakage through the pressure relief device to a control device as described in §60.482-10 is exempted from the requirements of paragraphs (a) and (b) of this section.

(d)(1) Any pressure relief device that is equipped with a rupture disk upstream of the pressure relief device is exempt from the requirements of paragraphs (a) and (b) of this section, provided the owner or operator complies with the requirements in paragraph (d)(2) of this section.

(2) After each pressure release, a new rupture disk shall be installed upstream of the pressure relief device as soon as practicable, but no later than 5 calendar days after each pressure release, except as provided in §60.482-9.

[48 FR 48335, Oct. 18, 1983, as amended at 65 FR 61762, Oct. 17, 2000; 65 FR 78277, Dec. 14, 2000]

§60.482-5 Standards: Sampling connection systems.

(a) Each sampling connection system shall be equipped with a closed-purged, closed-loop, or closed-vent system, except as provided in §60.482-1(c). Gases displaced during filling of the sample container are not required to be collected or captured.

(b) Each closed-purge, closed-loop, or closed-vent system as required in paragraph (a) of this section shall comply with the requirements specified in paragraphs (b)(1) through (4) of this section:

(1) Return the purged process fluid directly to the process line; or

(2) Collect and recycle the purged process fluid to a process; or

(3) Be designed and operated to capture and transport all the purged process fluid to a control device that complies with the requirements of §60.482-10; or

(4) Collect, store, and transport the purged process fluid to any of the following systems or facilities:

(i) A waste management unit as defined in 40 CFR 63.111, if the waste management unit is subject to, and operated in compliance with the provisions of 40 CFR part 63, subpart G, applicable to Group 1 wastewater streams;

(ii) A treatment, storage, or disposal facility subject to regulation under 40 CFR part 262, 264, 265, or 266; or

(iii) A facility permitted, licensed, or registered by a State to manage municipal or industrial solid waste, if the process fluids are not hazardous waste as defined in 40 CFR part 261.

(c) In situ sampling systems and sampling systems without purges are exempt from the requirements of paragraphs (a) and (b) of this section.

[60 FR 43258, Aug. 18, 1995, as amended at 65 FR 61762, Oct. 17, 2000; 65 FR 78277, Dec. 14, 2000]

§60.482-6 Standards: Open-ended valves or lines.

(a)(1) Each open-ended valve or line shall be equipped with a cap, blind flange, plug, or a second valve, except as provided in §60.482-1(c).

(2) The cap, blind flange, plug, or second valve shall seal the open end at all times except during operations requiring process fluid flow through the open-ended valve or line.

(b) Each open-ended valve or line equipped with a second valve shall be operated in a manner such that the valve on the process fluid end is closed before the second valve is closed.

(c) When a double block-and-bleed system is being used, the bleed valve or line may remain open during operations that require venting the line between the block valves but shall comply with paragraph (a) at all other times.

(d) Open-ended valves or lines in an emergency shutdown system which are designed to open automatically in the event of a process upset are exempt from the requirements of paragraphs (a), (b) and (c) of this section.

(e) Open-ended valves or lines containing materials which would autocatalytically polymerize or would present an explosion, serious overpressure, or other safety hazard if capped or equipped with a double block and bleed system as specified in paragraphs (a) through (c) of this section are exempt from the requirements of paragraphs (a) through (c) of this section

[48 FR 48335, Oct. 18, 1983, as amended at 49 FR 22607, May 30, 1984; 65 FR 78277, Dec. 14, 2000]

§60.482-7 Standards: Valves in gas/vapor service in light liquid service.

(a) Each valve shall be monitored monthly to detect leaks by the methods specified in §60.485(b) and shall comply with paragraphs (b) through (e), except as provided in paragraphs (f), (g), and (h), §60.483-1, 2, and §60.482-1(c).

(b) If an instrument reading of 10,000 ppm or greater is measured, a leak is detected.

(c)(1) Any valve for which a leak is not detected for 2 successive months may be monitored the first month of every quarter, beginning with the next quarter, until a leak is detected.

(2) If a leak is detected, the valve shall be monitored monthly until a leak is not detected for 2 successive months.

(d)(1) When a leak is detected, it shall be repaired as soon as practicable, but no later than 15 calendar days after the leak is detected, except as provided in §60.482-9.

(2) A first attempt at repair shall be made no later than 5 calendar days after each leak is detected.

(e) First attempts at repair include, but are not limited to, the following best practices where practicable:

(1) Tightening of bonnet bolts;

(2) Replacement of bonnet bolts;

(3) Tightening of packing gland nuts;

(4) Injection of lubricant into lubricated packing.

(f) Any valve that is designated, as described in §60.486(e)(2), for no detectable emissions, as indicated by an instrument reading of less than 500 ppm above background, is exempt from the requirements of paragraph (a) if the valve:

(1) Has no external actuating mechanism in contact with the process fluid,

(2) Is operated with emissions less than 500 ppm above background as determined by the method specified in §60.485(c), and

(3) Is tested for compliance with paragraph (f)(2) of this section initially upon designation, annually, and at other times requested by the Administrator.

(g) Any valve that is designated, as described in §60.486(f)(1), as an unsafe-to-monitor valve is exempt from the requirements of paragraph (a) if:

(1) The owner or operator of the valve demonstrates that the valve is unsafe to monitor because monitoring personnel would be exposed to an immediate danger as a consequence of complying with paragraph (a), and

(2) The owner or operator of the valve adheres to a written plan that requires monitoring of the valve as frequently as practicable during safe-to-monitor times

(h) Any valve that is designated, as described in §60.486(f)(2), as a difficult-to-monitor valve is exempt from the requirements of paragraph (a) if:

(1) The owner or operator of the valve demonstrates that the valve cannot be monitored without elevating the monitoring personnel more than 2 meters above a support surface.

(2) The process unit within which the valve is located either becomes an affected facility through §60.14 or §60.15 or the owner or operator designates less than 3.0 percent of the total number of valves as difficult-to-monitor, and

(3) The owner or operator of the valve follows a written plan that requires monitoring of the valve at least once per calendar year.

[48 FR 48335, Oct. 18, 1983, as amended at 49 FR 22608, May 30, 1984; 65 FR 61762, Oct. 17, 2000]

§60.482-8 Standards: Pumps and valves in heavy liquid service, pressure relief devices in light liquid or heavy liquid service, and flanges and other connectors.

(a) If evidence of a potential leak is found by visual, audible, olfactory, or any other detection method at pumps and valves in heavy liquid service, pressure relief devices in light liquid or heavy liquid service, and connectors, the owner or operator shall follow either one of the following procedures:

(1) The owner or operator shall monitor the equipment within 5 days by the method specified in §60.485(b) and shall comply with the requirements of paragraphs (b) through (d) of this section.

(2) The owner or operator shall eliminate the visual, audible, olfactory, or other indication of a potential leak.

(b) If an instrument reading of 10,000 ppm or greater is measured, a leak is detected.

(c)(1) When a leak is detected, it shall be repaired as soon as practicable, but not later than 15 calendar days after it is detected, except as provided in §60.482-9.

(2) The first attempt at repair shall be made no later than 5 calendar days after each leak is detected.

(d) First attempts at repair include, but are not limited to, the best practices described under §60.482-7(e).

[48 CFR 48335, Oct. 18, 1983, as amended at 65 FR 78277, Dec. 14, 2000]

§0.482-9 Standards: Delay of repair.

(a) Delay of repair of equipment for which leaks have been detected will be allowed if repair within 15 days is technically infeasible without a process unit shutdown. Repair of this equipment shall occur before the end of the next process unit shutdown.

(b) Delay of repair of equipment will be allowed for equipment which is isolated from the process and which does not remain in VOC service.

(c) Delay of repair for valves will be allowed if:

(1) The owner or operator demonstrates that emissions of purged material resulting from immediate repair are greater than the fugitive emissions likely to result from delay of repair, and

(2) When repair procedures are effected, the purged material is collected and destroyed or recovered in a control device complying with §60.482-10.

(d) Delay of repair for pumps will be allowed if:

(1) Repair requires the use of a dual mechanical seal system that includes a barrier fluid system, and

(2) Repair is completed as soon as practicable, but not later than 6 months after the leak was detected.

(e) Delay of repair beyond a process unit shutdown will be allowed for a valve, if valve assembly replacement is necessary during the process unit shutdown, valve assembly supplies have been depleted, and valve assembly supplies had been sufficiently stocked before the supplies were depleted. Delay of repair beyond the next process unit shutdown will not be allowed unless the next process unit shutdown occurs sooner than 6 months after the first process unit shutdown.

[48 FR 48335, Oct. 18, 1983, as amended at 65 FR 78277, Dec. 14, 2000]

§60.482-10 Standards: Closed vent systems and control devices.

(a) Owners or operators of closed vent systems and control devices used to comply with

provisions of this subpart shall comply with the provisions of this section.

(b) Vapor recovery systems (for example, condensers and absorbers) shall be designed and operated to recover the VOC emissions vented to them with an efficiency of 95 percent or greater, or to an exit concentration of 20 parts per million by volume, whichever is less stringent.

(c) Enclosed combustion devices shall be designed and operated to reduce the VOC emissions vented to them with an efficiency of 95 percent or greater, or to an exit concentration of 20 parts per million by volume, on a dry basis, corrected to 3 percent oxygen, whichever is less stringent or to provide a minimum residence time of 0.75 seconds at a minimum temperature of 816 °C.

(d) Flares used to comply with this subpart shall comply with the requirements of §60.18.

(e) Owners or operators of control devices used to comply with the provisions of this subpart shall monitor these control devices to ensure that they are operated and maintained in conformance with their designs.

(f) Except as provided in paragraphs (i) through (k) of this section, each closed vent system shall be inspected according to the procedures and schedule specified in paragraphs (f)(1) and (f)(2) of this section.

(1) If the vapor collection system or closed vent system is constructed of hard-piping, the owner or operator shall comply with the requirements specified in paragraphs (f)(1)(i) and (f)(1)(ii) of this section:

(i) Conduct an initial inspection according to the procedures in §60.485(b); and

(ii) Conduct annual visual inspections for visible, audible, or olfactory indications of leaks.

(2) If the vapor collection system or closed vent system is constructed of ductwork, the owner or operator shall:

(i) Conduct an initial inspection according to the procedures in §60.485(b); and

(ii) Conduct annual inspections according to the procedures in §60.485(b).

(g) Leaks, as indicated by an instrument reading greater than 500 parts per million by volume above background or by visual inspections, shall be repaired as soon as practicable except as provided in paragraph (h) of this section.

(1) A first attempt at repair shall be made no later than 5 calendar days after the leak is detected.

(2) Repair shall be completed no later than 15 calendar days after the leak is detected.

(h) Delay of repair of a closed vent system for which leaks have been detected is allowed if the repair is technically infeasible without a process unit shutdown or if the owner or operator determines that emissions resulting from immediate repair would be greater than the fugitive emissions likely to result from delay of repair. Repair of such equipment shall be complete by the end of the next process unit shutdown.

(i) If a vapor collection system or closed vent system is operated under a vacuum, it is exempt from the inspection requirements of paragraphs (f)(1)(i) and (f)(2) of this section.

(j) Any parts of the closed vent system that are designated, as described in paragraph (l)(1) of this section, as unsafe to inspect are exempt from the inspection requirements of paragraphs (f)(1)(i) and (f)(2) of this section if they comply with the requirements specified in paragraphs (j)(1) and (j)(2) of this section:

(1) The owner or operator determines that the equipment is unsafe to inspect because inspecting personnel would be exposed to an imminent or potential danger as a consequence of complying with paragraphs (f)(1)(i) or (f)(2) of this section; and

(2) The owner or operator has a written plan that requires inspection of the equipment as frequently as practicable during safe-to-inspect times.

(k) Any parts of the closed vent system that are designated, as described in paragraph (l)(2) of this section, as difficult to inspect are exempt from the inspection requirements of paragraphs (f)(1)(i) and (f)(2) of this section if they comply with the requirements specified in paragraphs (k)(1) through (k)(3) of this section:

(1) The owner or operator determines that the equipment cannot be inspected without elevating the inspecting personnel more than 2 meters above a support surface; and

(2) The process unit within which the closed vent system is located becomes an affected facility through §60.14 or §60.15, or the owner or operator designates less than 3.0 percent of the total number of closed vent system equipment as difficult to inspect; and

(3) The owner or operator has a written plan that requires inspection of the equipment at least once every 5 years. A closed vent system is exempt from inspection if it is operated under a vacuum.

(l) The owner or operator shall record the information specified in paragraphs (l)(1) through (l)(5) of this section.

(1) Identification of all parts of the closed vent system that are designated as unsafe to inspect, an explanation of why the equipment is unsafe to inspect, and the plan for inspecting the equipment.

(2) Identification of all parts of the closed vent system that are designated as difficult to inspect, an explanation of why the equipment is difficult to inspect, and the plan for inspecting the equipment.

(3) For each inspection during which a leak is detected, a record of the information specified in §60.486(c).

(4) For each inspection conducted in accordance with §60.485(b) during which no leaks are detected, a record that the inspection was performed, the date of the inspection, and a statement that no leaks were detected.

(5) For each visual inspection conducted in accordance with paragraph (f)(1)(ii) of this section during which no leaks are detected, a record that the inspection was performed, the date of the inspection, and a statement that no leaks were detected.

(m) Closed vent systems and control devices used to comply with provisions of this subpart shall be operated at all times when emissions may be vented to them.

[48 FR 48335, Oct. 18, 1983, as amended at 51 FR 2702, Jan. 21, 1986; 60 FR 43258, Aug. 18, 1995; 61 FR 29878, June 12, 1996; 65 FR 78277, Dec. 14, 2000]

§60.483-1 Alternative standards for valves-allowable percentage of valves leaking.

(a) An owner or operator may elect to comply with an allowable percentage of valves leaking of equal to or less than 2.0 percent.

(b) The following requirements shall be met if an owner or operator wishes to comply with an allowable percentage of valves leaking:

(1) An owner or operator must notify the Administrator that the owner or operator has elected to comply with the allowable percentage of valves leaking before implementing this alternative standard, as specified in §60.487(b).

(2) A performance test as specified in paragraph (c) of this section shall be conducted initially upon designation, annually, and at other times requested by the Administrator.

(3) If a valve leak is detected, it shall be repaired in accordance with §60.482-7(d) and (e).

(c) Performance tests shall be conducted in the following manner:

(1) All valves in gas/vapor and light liquid service within the affected facility shall be monitored within 1 week by the methods specified in §60.485(b).

(2) If an instrument reading of 10,000 ppm or greater is measured, a leak is detected.

(3) The leak percentage shall be determined by dividing the number of valves for which leaks are detected by the number of valves in gas/vapor and light liquid service within the affected facility.

(d) Owners and operators who elect to comply with this alternative standard shall not have an affected facility with a leak percentage greater than 2.0 percent.

[48 FR 48335, Oct. 18, 1983, as amended at 65 FR 61762, Oct. 17, 2000; 65 FR 78278, Dec. 14, 2000]

§60.483-2 Alternative standards for valves-skip period leak detection and repair.

(a)(1) An owner or operator may elect to comply with one of the alternative work practices specified in paragraphs (b)(2) and (3) of this section.

(2) An owner or operator must notify the Administrator before implementing one of the

alternative work practices, as specified in §60.487(b).

(b)(1) An owner or operator shall comply initially with the requirements for valves in gas/vapor service and valves in light liquid service, as described in §60.482-7.

(2) After 2 consecutive quarterly leak detection periods with the percent of valves leaking equal to or less than 2.0, an owner or operator may begin to skip 1 of the quarterly leak detection periods for the valves in gas/vapor and light liquid service.

(3) After 5 consecutive quarterly leak detection periods with the percent of valves leaking equal to or less than 2.0, an owner or operator may begin to skip 3 of the quarterly leak detection periods for the valves in gas/vapor and light liquid service.

(4) If the percent of valves leaking is greater than 2.0, the owner or operator shall comply with the requirements as described in §60.482-7 but can again elect to use this section.

(5) The percent of valves leaking shall be determined by dividing the sum of valves found leaking during current monitoring and valves for which repair has been delayed by the total number of valves subject to the requirements of this section.

(6) An owner or operator must keep a record of the percent of valves found leaking during each leak detection period.

[48 FR 48335, Oct. 18, 1983, as amended at 65 FR 61762, Oct. 17, 2000; 65 FR 78278, Dec. 14, 2000]

§60.484 Equivalence of means of emission limitation.

(a) Each owner or operator subject to the provisions of this subpart may apply to the Administrator for determination of equivalence for any means of emission limitation that achieves a reduction in emissions of VOC at least equivalent to the reduction in emissions of VOC achieved by the controls required in this subpart.

(b) Determination of equivalence to the equipment, design, and operational requirements of this subpart will be evaluated by the following guidelines:

(1) Each owner or operator applying for an equivalence determination shall be responsible for collecting and verifying test data to demonstrate equivalence of means of emission limitation.

(2) The Administrator will compare test data for the means of emission limitation to test data for the equipment, design, and operational requirements.

(3) The Administrator may condition the approval of equivalence on requirements that may be necessary to assure operation and maintenance to achieve the same emission reduction as the equipment, design, and operational requirements.

(c) Determination of equivalence to the required work practices in this subpart will be evaluated by the following guidelines:

(1) Each owner or operator applying for a determination of equivalence shall be responsible for collecting and verifying test data to demonstrate equivalence of an equivalent means of emission limitation

(2) For each affected facility for which a determination of equivalence is requested, the emission reduction achieved by the required work practice shall be demonstrated.

(3) For each affected facility, for which a determination of equivalence is requested, the emission reduction achieved by the equivalent means of emission limitation shall be demonstrated.

(4) Each owner or operator applying for a determination of equivalence shall commit in writing to work practice(s) that provide for emission reductions equal to or greater than the emission reductions achieved by the required work practice.

(5) The Administrator will compare the demonstrated emission reduction for the equivalent means of emission limitation to the demonstrated emission reduction for the required work practices and will consider the commitment in paragraph (c)(4).

(6) The Administrator may condition the approval of equivalence on requirements that may be necessary to assure operation and maintenance to achieve the same emission reduction as the required work practice.

(d) An owner or operator may offer a unique approach to demonstrate the equivalence of any equivalent means of emission limitation.

(e)(1) After a request for determination of equivalence is received, the Administrator will publish a notice in the *Federal Register* and provide the opportunity for public hearing if the Administrator judges that the request may be approved.

(2) After notice and opportunity for public hearing, the Administrator will determine the equivalence of a means of emission limitation and will publish the determination in the *Federal Register*.

(3) Any equivalent means of emission limitations approved under this section shall constitute a required work practice, equipment, design, or operational standard within the meaning of section 111(h)(1) of the Clean Air Act.

(f)(1) Manufacturers of equipment used to control equipment leaks of VOC may apply to the Administrator for determination of equivalence for any equivalent means of emission limitation that achieves a reduction in emissions of VOC achieved by the equipment, design, and operational requirements of this subpart.

(2) The Administrator will make an equivalence determination according to the provisions of paragraphs (b), (c), (d), and (e) of this section.

[48 FR 48335, Oct. 18, 1983, as amended at 65 FR 61762, Oct. 17, 2000]

§60.485 Test methods and procedures.

(a) In conducting the performance tests required in §60.8, the owner or operator shall use as reference methods and procedures the test methods in appendix A of this part or other methods and procedures as specified in this section, except as provided in §60.8(b).

(b) The owner or operator shall determine compliance with the standards in §§60.482, 60.483, and 60.484 as follows:

(1) Method 21 shall be used to determine the presence of leaking sources. The instrument shall be calibrated before use each day of its use by the procedures specified in Method 21. The following calibration gases shall be used:

(i) Zero air (less than 10 ppm of hydrocarbon in air); and

(ii) A mixture of methane or n-hexane and air at a concentration of about, but less than, 10,000 ppm methane or n-hexane.

(c) The owner or operator shall determine compliance with the no detectable emission standards in §§60.482-2(e), 60.482-3(i), 60.482-4, 60.482-7(f), and 60.482-10(e) as follows:

(1) The requirements of paragraph (b) shall apply.

(2) Method 21 shall be used to determine the background level. All potential leak interfaces shall be traversed as close to the interface as possible. The arithmetic difference between the maximum concentration indicated by the instrument and the background level is compared with 500 ppm for determining compliance.

(d) The owner or operator shall test each piece of equipment unless he demonstrates that a process unit is not in VOC series, i.e., that the VOC content would never be reasonably expected to exceed 10 percent by weight. For purposes of this demonstration, the following methods and procedures shall be used:

(1) Procedures that conform to the general methods in ASTM E260-73, 91, or 96, E168-67, 77, or 92, E169-63, 77, or 93 (incorporated by reference -- see §60.17) shall be used to determine the percent VOC content in the process fluid that is contained in or contacts a piece of equipment.

(2) Organic compounds that are considered by the Administrator to have negligible photochemical reactivity may be excluded from the total quantity of organic compounds in determining the VOC content of the process fluid.

(3) Engineering judgment may be used to estimate the VOC content, if a piece of equipment had not been shown previously to be in service. If the Administrator disagrees with the judgment, paragraphs (d) (1) and (2) of this section shall be used to resolve the disagreement.

(e) The owner or operator shall demonstrate that an equipment is in light liquid service by showing that all the following conditions apply:

(1) The vapor pressure of one or more of the components is greater than 0.3 kPa at 20 °C (1.2 in. H_2O at 68 °F). Standard reference texts or ASTM D2879-83, 96, or 97 (incorporated by reference -- see §60.17) shall be used to determine the vapor pressures.

(2) The total concentration of the pure components having a vapor pressure greater than 0.3 kPa at 20 °C (1.2 in. H_2O at 68 °F) is equal to or greater than 20 percent by weight.

(3) The fluid is a liquid at operating conditions.

(f) Samples used in conjunction with paragraphs (d), (e), and (g) of this section shall be representative of the process fluid that is contained in or contacts the equipment or the gas being combusted in the flare.

(g) The owner or operator shall determine compliance with the standards of flares as follows:

(1) Method 22 shall be used to determine visible emissions.

(2) A thermocouple or any other equivalent device shall be used to monitor the presence of a pilot flame in the flare.

(3) The maximum permitted velocity for air assisted flares shall be computed using the following equation:

$$V_{max} = K_1 + K_2 H_T$$

Where:

V_{max} = Maximum permitted velocity, m/sec (ft/sec)

H_T = Net heating value of the gas being combusted, MJ/scm (Btu/scf).

K_1 = 8.706 m/sec (metric units)

= 28.56 ft/sec (English units)

K_2 = 0.7084 m^4/(MJ-sec) (metric units)

= 0.087 ft^4/(Btu-sec) (English units)

(4) The net heating value (H_T) of the gas being combusted in a flare shall be computed using the following equation:

$$H_T = K \sum_{i=1}^{n} C_i H_i$$

Where:

K = Conversion constant, 1.740×10^7 (g-mole)(MJ)/(ppm-scm-kcal) (metric units)

= 4.674×10^8 [(g-mole)(Btu)/(ppm-scf-kcal)] (English units)

C_i = Concentration of sample component "i," ppm.

H_i = net heat of combustion of sample component "i" at 25 °C and 760 mm Hg (77 °F and 14.7 psi), kcal/g-mole

(5) Method 18 and ASTM D2504-67, 77, or 88 (Reapproved 1993) (incorporated by reference -- see §60.17) shall be used to determine the concentration of sample component "i."

(6) ASTM D2382-76 or 88 or D4809-95 (incorporated by reference -- see §60.17) shall be used to determine the net heat of combustion of component "I" if published values are not available or cannot be calculated.

(7) Method 2, 2A, 2C, or 2D, as appropriate, shall be used to determine the actual exit velocity of a flare. If needed, the unobstructed (free) cross-sectional area of the flare tip shall be used.

[54 FR 6678, Feb. 14, 1989, as amended at 54 FR 27016, June 27, 1989; 65 FR 61763, Oct. 17, 2000]

§60.486 Recordkeeping requirements.

(a)(1) Each owner or operator subject to the provisions of this subpart shall comply with the recordkeeping requirements of this section.

(2) An owner or operator of more than one affected facility subject to the provisions of this subpart may comply with the recordkeeping requirements for these facilities in one recordkeeping system if the system identifies each record by each facility.

(b) When each leak is detected as specified in §§60.482-2, 60.482-3, 60.482-7, 60.482-8, and 60.483-2, the following requirements apply:

(1) A weatherproof and readily visible identification, marked with the equipment identification number, shall be attached to the leaking equipment.

(2) The identification on a valve may be removed after it has been monitored for 2 successive months as specified in §60.482-7(c) and no leak has been detected during those 2 months.

(3) The identification on equipment except on a valve, may be removed after it has been repaired.

(c) When each leak is detected as specified in §§60.482-2, 60.482-3, 60.482-7, 60.482-8, and 60.483-2, the following information shall be recorded in a log and shall be kept for 2 years in a readily accessible location:

(1) The instrument and operator identification numbers and the equipment identification number.

(2) The date the leak was detected and the dates of each attempt to repair the leak.

(3) Repair methods applied in each attempt to repair the leak.

(4) "Above 10,000" if the maximum instrument reading measured by the methods specified in §60.485(a) after each repair attempt is equal to or greater than 10,000 ppm.

(5) "Repair delayed" and the reason for the delay if a leak is not repaired within 15 calendar days after discovery of the leak.

(6) The signature of the owner or operator (or designate) whose decision it was that repair could not be effected without a process shutdown.

(7) The expected date of successful repair of the leak if a leak is not repaired within 15 days.

(8) Dates of process unit shutdown that occur while the equipment is unrepaired.

(9) The date of successful repair of the leak.

(d) The following information pertaining to the design requirements for closed vent systems and control devices described in §60.482-10 shall be recorded and kept in a readily accessible location:

(1) Detailed schematics, design specifications, and piping and instrumentation diagrams.

(2) The dates and descriptions of any changes in the design specifications.

(3) A description of the parameter or parameters monitored, as required in §60.482-10(e), to ensure that control devices are operated and maintained in conformance with their design and an explanation of why that parameter (or parameters) was selected for the monitoring.

(4) Periods when the closed vent systems and control devices required in §§60.482-2, 60.482-3, 60.482-4, and 60.482-5 are not operated as designed, including periods when a flare pilot light does not have a flame.

(5) Dates of startups and shutdowns of the closed vent systems and control devices required in §§60.482-2, 60.482-3, 60.482-4, and 60.482-5.

(e) The following information pertaining to all equipment subject to the requirements in §§60.482-1 to 60.482-10 shall be recorded in a log that is kept in a readily accessible location:

(1) A list of identification numbers for equipment subject to the requirements of this subpart.

(2)(i) A list of identification numbers for equipment that are designated for no detectable emissions under the provisions of §§60.482-2(e), 60.482-3(i) and 60.482-7(f).

(ii) The designation of equipment as subject to the requirements of §60.482-2(e), §60.482-3(i), or §60.482-7(f) shall be signed by the owner or operator.

(3) A list of equipment identification numbers for pressure relief devices required to comply with §60.482-4.

(4)(i) The dates of each compliance test as required in §§60.482-2(e), 60.482-3(i), 60.482-4, and 60.482-7(f).

(ii) The background level measured during each compliance test.

(iii) The maximum instrument reading measured at the equipment during each compliance test.

(5) A list of identification numbers for equipment in vacuum service.

(f) The following information pertaining to all valves subject to the requirements of §60.482-7(g) and (h) and to all pumps subject to the requirements of §60.482-2(g) shall be recorded in a log that is kept in a readily accessible location:

(1) A list of identification numbers for valves and pumps that are designated as unsafe-to-monitor, an explanation for each valve or pump stating why the valve or pump is unsafe-to-monitor, and the plan for monitoring each valve or pump.

(2) A list of identification numbers for valves that are designated as difficult-to-monitor, an explanation for each valve stating why the valve is difficult-to-monitor, and the schedule for monitoring each valve.

(g) The following information shall be recorded for valves complying with §60.483-2:

(1) A schedule of monitoring.

(2) The percent of valves found leaking during each monitoring period.

(h) The following information shall be recorded in a log that is kept in a readily accessible location:

(1) Design criterion required in §§60.482-2(d)(5) and 60.482-3(e)(2) and explanation of the design criterion; and

(2) Any changes to this criterion and the reasons for the changes.

(i) The following information shall be recorded in a log that is kept in a readily accessible location for use in determining exemptions as provided in §60.480(d):

(1) An analysis demonstrating the design capacity of the affected facility,

(2) A statement listing the feed or raw materials and products from the affected facilities and an analysis demonstrating whether these chemicals are heavy liquids or beverage alcohol, and

(3) An analysis demonstrating that equipment is not in VOC service.

(j) Information and data used to demonstrate that a piece of equipment is not in VOC service shall be recorded in a log that is kept in a readily accessible location.

(k) The provisions of §60.7 (b) and (d) do not apply to affected facilities subject to this subpart.

[48 FR 48335, Oct. 18, 1983, as amended at 65 FR 61763, Oct. 17, 2000; 65 FR 78278, Dec. 14, 2000]

§60.487 Reporting requirements.

(a) Each owner or operator subject to the provisions of this subpart shall submit semi-annual reports to the Administrator beginning six months after the initial startup date.

(b) The initial semiannual report to the Administrator shall include the following information:

(1) Process unit identification.

(2) Number of valves subject to the requirements of §60.482-7, excluding those valves designated for no detectable emissions under the provisions of §60.482-7(f).

(3) Number of pumps subject to the requirements of §60.482-2, excluding those pumps designated for no detectable emissions under the provisions of §60 482-2(e) and those pumps complying with §60.482-2(f).

(4) Number of compressors subject to the requirements of §60.482-3, excluding those compressors designated for no detectable emissions under the provisions of §60.482-3(i) and those compressors complying with §60.482-3(h).

(c) All semiannual reports to the Administrator shall include the following information, summarized from the information in §60.486:

(1) Process unit identification.

(2) For each month during the semiannual reporting period,

(i) Number of valves for which leaks were detected as described in §60 482(7)(b) or §60.483-2,

(ii) Number of valves for which leaks were not repaired as required in §60.482-7(d)(1),

(iii) Number of pumps for which leaks were detected as described in §60.482-2(b) and (d)(6)(i),

(iv) Number of pumps for which leaks were not repaired as required in §60.482-2(c)(1) and (d)(6)(ii),

(v) Number of compressors for which leaks were detected as described in §60.482-3(f),

(vi) Number of compressors for which leaks were not repaired as required in §60.482-3(g)(1), and

(vii) The facts that explain each delay of repair and, where appropriate, why a process unit shutdown was technically infeasible.

(3) Dates of process unit shutdowns which occurred within the semiannual reporting period.

(4) Revisions to items reported according to paragraph (b) if changes have occurred since the initial report or subsequent revisions to the initial report.

(d) An owner or operator electing to comply with the provisions of §§60.483-1 and 60.483-2 shall notify the Administrator of the alternative standard selected 90 days before implementing either of the provisions.

(e) An owner or operator shall report the results of all performance tests in accordance with §60.8 of the General Provisions. The provisions of §60.8(d) do not apply to affected facilities subject to the provisions of this subpart except that an owner or operator must notify the Administrator of the schedule for the initial performance tests at least 30 days before the initial performance tests.

(f) The requirements of paragraphs (a) through (c) of this section remain in force until and unless EPA, in delegating enforcement authority to a State under section 111(c) of the Act, approves reporting requirements or an alternative means of compliance surveillance adopted by such State. In that event, affected sources within the State will be relieved of the obligation to comply with the requirements of paragraphs (a) through (c) of this section, provided that they comply with the requirements established by the State.

[48 FR 48335, Oct. 18, 1983, as amended at 49 FR 22608, May 30, 1984; 65 FR 61763, Oct. 17, 2000]

§60.488 Reconstruction.

For the purposes of this subpart:

(a) The cost of the following frequently replaced components of the facility shall not be considered in calculating either the "fixed capital cost of the new components" or the "fixed capital costs that would be required to construct a comparable new facility" under §60.15: pump seals, nuts and bolts, rupture disks, and packings.

(b) Under §60.15, the "fixed capital cost of new components" includes the fixed capital cost of all depreciable components (except components specified in §60.488 (a)) which are or will be replaced pursuant to all continuous programs of component replacement which are commenced within any 2-year period following the applicability date for the appropriate subpart. (See the "Applicability and designation of affected facility" section of the appropriate subpart.) For purposes of this paragraph, "commenced" means that an owner or operator has undertaken a continuous program of component replacement or that an owner or operator has entered into a contractual obligation to undertake and complete, within a reasonable time, a continuous program of component replacement.

[49 FR 22608, May 30, 1984]

§60.489 List of chemicals produced by affected facilities.

(a) The following chemicals are produced, as intermediates or final products, by process units covered under this subpart. The applicability date for process units producing one or more of these chemicals is January 5, 1981.

CAS No.[a]	Chemical
105-57-7	Acetal.
75-07-0	Acetaldehyde.
107-89-1	Acetaldol.
60-35-5	Acetamide.
103-84-4	Acetanilide.
64-19-7	Acetic acid.
108-24-7	Acetic anhydride.

CAS No.[a]	Chemical
67-64-1	Acetone.
75-86-5	Acetone cyanohydrin.
75-05-8	Acetonitrile.
98-86-2	Acetophenone.
75-36-5	Acetyl chloride.
74-86-2	Acetylene.
107-02-8	Acrolein.

CAS No.[a]	Chemical
79-06-1	Acrylamide.
79-10-7	Acrylic acid.
107-13-1	Acrylonitrile.
124-04-9	Adipic acid.
111-69-3	Adiponitrile.
(b).....	Alkyl naphthalenes.
107-18-6	Allyl alcohol.

CAS No.[a]	Chemical
107-05-1	Allyl chloride.
1321-11-5	Aminobenzoic acid.
111-41-1	Aminoethylethanolamine.
123-30-8	p-Aminophenol.
628-63-7, 123-92-2.	Amyl acetates.
71-41-0(c)	Amyl alcohols.
110-58-7	Amyl amine.
543-59-9	Amyl chloride.
110-66-7(c)	Amyl mercaptans.
1322-06-1	Amyl phenol.
62-53-3	Aniline.
142-04-1	Aniline hydrochloride.
29191-52-4	Anisidine.
100-66-3	Anisole.
118-92-3	Anthranilic acid.
84-65-1	Anthraquinone.
100-52-7	Benzaldehyde.
55-21-0	Benzamide.
71-43-2	Benzene.
98-48-6	Benzenedisulfonic acid.
98-11-3	Benzenesulfonic acid.
134-81-6	Benzil.
76-93-7	Benzilic acid.
65-85-0	Benzoic acid.
119-53-9	Benzoin.
100-47-0	Benzonitrile.
119-61-9	Benzophenone.
98-07-7	Benzotrichloride.
98-88-4	Benzoyl chloride.
100-51-6	Benzyl alcohol.
100-46-9	Benzylamine.
120-51-4	Benzyl benzoate.
100-44-7	Benzyl chloride.
98-87-3	Benzyl dichloride.
92-52-4	Biphenyl.
80-05-7	Bisphenol A.
10-86-1	Bromobenzene.
27497-51-4	Bromonaphthalene.
106-99-0	Butadiene.
106-98-9	1-butene.
123-86-4	n-butyl acetate.
141-32-2	n-butyl acrylate.
71-36-3	n-butyl alcohol.
78-92-2	s-butyl alcohol.
75-65-0	t-butyl alcohol.
109-73-9	n-butylamine.
13952-84-6	s-butylamine.
75-64-9	t-butylamine.
98-73-7	p-tert-butyl benzoic acid.
107-88-0	1,3-butylene glycol.
123-72-8	n-butyraldehyde.
107-92-6	Butyric acid.
106-31-0	Butyric anhydride.
109-74-0	Butyronitrile.
105-60-2	Caprolactam.
75-1-50	Carbon disulfide.
558-13-4	Carbon tetrabromide.
56-23-5	Carbon tetrachloride.
9004-35-7	Cellulose acetate.
79-11-8	Chloroacetic acid.
108-42-9	m-chloroaniline.
95-51-2	o-chloroaniline.
106-47-8	p-chloroaniline.
35913-09-8	Chlorobenzaldehyde.
108-90-7	Chlorobenzene.
118-91-2, 535-80-8, 74-11-3(c).	Chlorobenzoic acid.
2136-81-4, 2136-89-2, 5216-25-1(c)	Chlorobenzotrichloride.
1321-03-5	Chlorbenzoyl chloride.
25497-29-4	Chlorodifluoromethane.
75-45-6	Chlorodifluoroethane.
67-66-3	Chloroform.
25586-43-0	Chloronapthalene.
88-73-3	o-chloronitrobenzene.
100-00-5	p-chloronitrobenzene.
25167-80-0	Chlorophenols.
126-99-8	Chloroprene.
7790-94-5	Chlorosulfonic acid.
108-41-8	m-chlorotoluene.
95-49-8	o-chlorotoluene.
106-43-4	p-chlorotoluene.
75-72-9	Chlorotrifluoromethane.
108-39-4	m-cresol.
95-48-7	o-cresol.
106-44-5	p-cresol.
1319-77-3	Mixed cresols.
1319-77-3	Cresylic acid.
4170-30-0	Crotonaldehyde.
3724-65-0	Crotonic acid.
98-82-8	Cumene.
80-15-9	Cumene hydroperoxide.
372-09-8	Cyanoacetic acid.
506-77-4	Cyanogen chloride.
108-80-5	Cyanuric acid.
108-77-0	Cyanuric chloride.
110-82-7	Cyclohexane.
108-93-0	Cyclohexanol.
108-94-1	Cyclohexanone.
110-83-8	Cyclohexene.
108-91-8	Cyclohexylamine.
111-78-4	Cyclooctadiene.
112-30-1	Decanol.
123-42-2	Diacetone alcohol.
27576-04-1	Diaminobenzoic acid.
95-76-1, 95-82-9, 554-00-7, 608-27-5, 608-31-1, 626-43-7, 27134-27-6, 57311-92-9(c)	Dichloroaniline.
541-73-1	m-dichlorobenzene.
95-50-1	o-dichlorobenzene.
106-46-7	p-dichlorobenzene.
75-71-8	Dichlorodifluoromethane.
111-44-4	Dichloroethyl ether.
107-06-2	1,2-dichloroethane (EDC).
96-23-1	Dichlorohydrin.
26952-23-8	Dichloropropene.
101-83-7	Dicyclohexylamine.
109-89-7	Diethylamine.
111-46-6	Diethylene glycol.
112-36-7	Diethylene glycol diethyl ether.
111-96-6	Diethylene glycol dimethyl ether.
112-34-5	Diethylene glycol monobutyl ether.
124-17-7	Diethylene glycol monobutyl ether acetate.
111-90-0	Diethylene glycol monoethyl ether.
112-15-2	Diethylene glycol monoethyl ether acetate.
111-77-3	Diethylene glycol monomethyl ether.
64-67-5	Diethyl sulfate.
75-37-6	Difluoroethane.
25167-70-8	Diisobutylene.
26761-40-0	Diisodecyl phthalate.
27554-26-3	Diisooctyl phthalate.
674-82-8	Diketene.
124-40-3	Dimethylamine.
121-69-7	N,N-dimethylaniline.
115-10-6	N,N-dimethyl ether.
68-12-2	N,N-dimethylformamide.
57-14-7	Dimethylhydrazine.
77-78-1	Dimethyl sulfate.
75-18-3	Dimethyl sulfide.
67-68-5	Dimethyl sulfoxide.
120-61-6	Dimethyl terephthalate.
99-34-3	3,5-dinitrobenzoic acid.
51-28-5	Dinitrophenol.
25321-14-6	Dinitrotoluene.
123-91-1	Dioxane.
646-06-0	Dioxilane.
122-39-4	Diphenylamine.
101-84-8	Diphenyl oxide.
102-08-9	Diphenyl thiourea.
25265-71-8	Dipropylene glycol.
25378-22-7	Dodecene.
28675-17-4	Dodecylaniline.
27193-86-8	Dodecylphenol.
106-89-8	Epichlorohydrin.
64-17-5	Ethanol.
141-43-5(c)	Ethanolamines.
141-78-6	Ethyl acetate.
141-97-9	Ethyl acetoacetate.
140-88-5	Ethyl acrylate.
75-04-7	Ethylamine.
100-41-4	Ethylbenzene.
74-96-4	Ethyl bromide.
9004-57-3	Ethylcellulose.
75-00-3	Ethyl chloride.
105-39-5	Ethyl chloroacetate.
105-56-6	Ethylcyanoacetate.
74-85-1	Ethylene.
96-49-1	Ethylne carbonate.
107-07-3	Ethylene chlorohydrin.
107-15-3	Ethylenediamine.
106-93-4	Ethylene dibromide.
107-21-1	Ethylene glycol.
111-55-7	Ethylene glycol diacetate.
110-71-4	Ethylene glycol dimethyl ether
111-76-2	Ethylene glycol monobutyl ether
112-07-2	Ethylene glycol monobutyl ether acetate.
110-80-5	Ethylene glycol monoethy ether
111-15-9	Ethylene glycol monethyl ether acetate.
109-86-4	Ethylene glycol monomethyl ether.
110-49-6	Ethylene glycol monomethyl ether acetate.
122-99-6	Ethylene glycol monophenyl ether.
2807-30-9	Ethylene glycol monopropyl ether.
75-21-8	Ethylene oxide.
60-29-7	Ethyl ether

CAS No.[a]	Chemical
104-76-7	2-ethylhexanol.
122-51-0	Ethyl orthoformate.
95-92-1	Ethyl oxalate.
41892-71-1	Ethyl sodium oxalacetate.
50-00-0	Formaldehyde.
75-12-7	Formamide.
64-18-6	Formic acid.
110-17-8	Fumaric acid.
98-01-1	Furfural.
56-81-5	Glycerol.
26545-73-7	Glycerol dichlorohydrin.
25791-96-2	Glycerol triether.
56-40-6	Glycine.
107-22-2	Glyoxal.
118-74-1	Hexachlorobenzene.
67-72-1	Hexachloroethane.
36653-82-4	Hexadecyl alcohol.
124-09-4	Hexamethylenediamine.
629-11-8	Hexamethylene glycol.
100-97-0	Hexamethylenetetramine.
74-90-8	Hydrogen cyanide.
123-31-9	Hydroquinone.
99-96-7	p-hydroxybenzoic acid.
26760-64-5	Isoamylene.
78-83-1	Isobutanol.
110-19-0	Isobutyl acetate.
115-11-7	Isobutylene.
78-84-2	Isobutyraldehyde.
79-31-2	Isobutyric acid.
25339-17-7	Isodecanol.
26952-21-6	Isooctyl alcohol.
78-78-4	Isopentane.
78-59-1	Isophorone.
121-91-5	Isophthalic acid.
78-79-5	Isoprene.
67-63-0	Isopropanol.
108-21-4	Isopropyl acetate.
75-31-0	Isopropylamine.
75-29-6	Isopropyl chloride.
25168-06-3	Isopropylphenol.
463-51-4	Ketene.
(b).....	Linear alkyl sulfonate.
123-01-3	Linear alkylbenzene (linear dodecylbenzene).
110-16-7	Maleic acid.
108-31-6	Maleic anhydride.
6915-15-7	Malic acid.
141-79-7	Mesityl oxide.
121-47-1	Metanilic acid.
79-41-4	Methacrylic acid.
563-47-3	Methallyl chloride.
67-56-1	Methanol.
79-20-9	Methyl acetate.
105-45-3	Methyl acetoacetate.
74-89-5	Methylamine.
100-61-8	n-methylaniline.
74-83-9	Methyl bromide.
37365-71-2	Methyl butynol.
74-87-3	Methyl chloride.
108-87-2	Methylcyclohexane.
1331-22-2	Methylcyclohexanone.
75-09-2	Methylene chloride.
101-77-9	Methylene dianiline.
101-68-8	Methylene diphenyl deisocyanate
78-93-3	Methyl ethyl ketone.
107-31-3	Methyl formate.
108-11-2	Methyl isobutyl carbinol.
108-10-1	Methyl isobutyl ketone.

CAS No.[a]	Chemical
80-62-6	Methyl methacrylate.
77-75-8	Methylpentynol.
98-83-9	a-methylstyrene.
110-91-8	Morpholine.
85-47-2	a-naphthalene sulfonic acid.
120-18-3	b-naphthalene sulfonic acid.
90-15-3	a-naphthol.
135-19-3	b-naphthol.
75-98-9	Neopentanoic acid.
88-74-4	o-nitroaniline.
100-01-6	p-nitroaniline.
91-23-6	o-nitroanisole.
100-17-4	p-nitroanisole.
98-95-3	Nitrobenzene.
27178-83-2(c)	Nitrobenzoic acid (o, m, and p)
79-24-3	Nitroethane.
75-52-5	Nitromethane.
88-75-5	2-Nitrophenol.
25322-01-4	Nitropropane.
1321-12-6	Nitrotoluene.
27215-95-8	Nonene.
25154-52-3	Nonylphenol.
27193-28-8	Octylphenol.
123-63-7	Paraldehyde.
115-77-5	Pentaerythritol.
109-66-0	n-pentane.
109-67-1	1-pentene
127-18-4	Perchloroethylene.
594-42-3	Perchloromethyl mercaptan.
94-70-2	o-phenetidine.
156-43-4	p-phenetidine.
108-95-2	Phenol.
98-67-9, 585-38-6, 609-46-1, 1333-39-7(c)	Phenolsulfonic acids.
91-40-7	Phenyl anthranilic acid.
(b).....	Phenylenediamine.
75-44-5	Phosgene.
85-44-9	Phthalic anhydride.
85-41-6	Phthalimide.
108-99-6	b-picoline
110-85-0	Piperazine.
9003-29-6, 25036-29-7(c)	Polybutenes.
25322-68-3	Polyethylene glycol.
25322-69-4	Polypropylene glycol.
123-38-6	Propional dehyde.
79-09-4	Propionic acid.
71-23-8	n-propyl alcohol.
107-10-8	Propylamine.
540-54-5	Propyl chloride.
115-07-1	Propylene.
127-00-4	Propylene chlorohydrin.
78-87-5	Propylene dichloride.
57-55-6	Propylene glycol.
75-56-9	Propylene oxide.
110-86-1	Pyridine.
106-51-4	Quinone.
108-46-3	Resorcinol
27138-57-4	Resorcylic acid.
69-72-7	Salicylic acid.
127-09-3	Sodium acetate.
532-32-1	Sodium benzoate.
9004-32-4	Sodium carboxymethyl cellulose
3926-62-3	Sodium chloroacetate.
141-53-7	Sodium formate.

CAS No.[a]	Chemical
139-02-6	Sodium phenate.
110-44-1	Sorbic acid.
100-42-5	Styrene.
110-15-6	Succinic acid.
110-61-2	Succinonitrile.
121-57-3	Sulfanilic acid.
126-33-0	Sulfolane.
1401-55-4	Tannic acid.
100-21-0	Terephthalic acid.
79-34-5(c)	Tetrachloroethanes.
117-08-8	Tetrachlorophthalic anhydride.
78-00-2	Tetraethyl lead.
119-64-2	Tetrahydronapthalene.
85-43-8	Tetrahydrophthalic anhydride.
75-74-1	Tetramethyl lead.
110-60-1	Tetramethylenediamine.
110-18-9	Tetramethylethylenediamine
108-88-3	Toluene.
95-80-7	Toluene-2,4-diamine.
584-84-9	Toluene-2,4-diisocyanate.
26471-62-5	Toluene diisocyanates (mixture)
1333-07-9	Toluenesulfonamide.
104-15-4(c)	Toluenesulfonic acids.
98-59-9	Toluenesulfonyl chloride.
26915-12-8	Toluidines.
87-61-6, 108-70-3, 120-82-1(c)	Trichlorobenzenes.
71-55-6	1,1,1-trichloroethane.
79-00-5	1,1,2-trichloroethane.
79-01-6	Trichloroethylene.
75-69-4	Trichlorofluoromethane.
96-18-4	1,2,3-trichloropropane.
76-13-1	1,1,2-trichloro-1,2,2-trifluoro ethane
121-44-8	Triethylamine.
112-27-6	Triethylene glycol.
112-49-2	Triethylene glycol dimethyl ether
7756-94-7	Triisobutylene.
75-50-3	Trimethylamine.
57-13-6	Urea.
108-05-4	Vinyl acetate.
75-01-4	Vinyl chloride.
75-35-4	Vinylidene chloride.
25013-15-4	Vinyl toluene.
1330-20-7	Xylenes (mixed).
95-47-6	o-xylene.
106-42-3	p-xylene.
1300-71-6	Xylenol.
1300-73-8	Xylidine.

(a) CAS numbers refer to the Chemical Abstracts Registry numbers assigned to specific chemicals, isomers, or mixtures of chemicals. Some isomers or mixtures that are covered by the standards do not have CAS numbers assigned to them. The standards apply to all of the chemicals listed, whether CAS numbers have been assigned or not.

(b) No CAS number(s) have been assigned to this chemical, its isomers, or mixtures containing these chemicals.

(c) CAS numbers for some of the isomers are listed; the standards apply to all of the isomers and mixtures, even if CAS numbers have not been assigned.

[48 FR 48335, Oct. 18, 1983, as amended at 65 FR 61763, Oct. 17, 2000

APPENDIX C

40 CFR 60 SUBPART QQQ

Subpart QQQ-Standards of Performance for VOC Emissions From Petroleum Refinery Wastewater Systems

Source: 53 FR 47623, Nov. 23, 1988, unless otherwise noted.

§ 60.690 Applicability and designation of affected facility.

(a)(1) The provisions of this subpart apply to affected facilities located in petroleum refineries for which construction, modification, or reconstruction is commenced after May 4, 1987.

(2) An individual drain system is a separate affected facility.

(3) An oil-water separator is a separate affected facility.

(4) An aggregate facility is a separate affected facility.

(b) Notwithstanding the provisions of 40 CFR 60.14(e)(2), the construction or installation of a new individual drain system shall constitute a modification to an affected facility described in §60.690(a)(4). For purposes of this paragraph, a new individual drain system shall be limited to all process drains and the first common junction box.

§ 60.691 Definitions.

As used in this subpart, all terms not defined herein shall have the meaning given them in the Act or in subpart A of 40 CFR part 60, and the following terms shall have the specific meanings given them.

Active service means that a drain is receiving refinery wastewater from a process unit that will continuously maintain a water seal.

Aggregate facility means an individual drain system together with ancillary downstream sewer lines and oil-water separators, down to and including the secondary oil-water separator, as applicable.

Catch basin means an open basin which serves as a single collection point for stormwater runoff received directly from refinery surfaces and for refinery wastewater from process drains.

Closed vent system means a system that is not open to the atmosphere and that is composed of piping, connections, and, if necessary, flow-inducing devices that transport gas or vapor from an emission source to a control device. If gas or vapor from regulated equipment are routed to a process (e.g., to a petroleum refinery fuel gas system), the process shall not be considered a closed vent system and is not subject to the closed vent system standards.

Completely closed drain system means an individual drain system that is not open to the atmosphere and is equipped and operated with a closed vent system and control device complying with the requirements of § 60.692-5.

Control device means an enclosed combustion device, vapor recovery system, or flare.

Fixed roof means a cover that is mounted to a tank or chamber in a stationary manner and which does not move with fluctuations in wastewater levels.

Floating roof means a pontoon-type or double-deck type cover that rests on the liquid surface.

Gas-tight means operated with no detectable emissions.

Individual drain system means all process drains connected to the first common downstream junction box. The term includes all such drains and common junction box, together with their associated sewer lines and other junction boxes, down to the receiving oil-water separator.

Junction box means a manhole or access point to a wastewater sewer system line.

No detectable emissions means less than 500 ppm above background levels, as measured by a detection instrument in accordance with Method 21 in appendix A of 40 CFR part 60.

Non-contact cooling water system means a once-through drain, collection and treatment system designed and operated for collecting cooling water which does not come into contact with hydrocarbons or oily wastewater and which is not recirculated through a cooling tower.

Oil-water separator means wastewater treatment equipment used to separate oil from water consisting of a separation tank, which also includes the forebay and other separator basins, skimmers, weirs, grit chambers, and sludge hoppers. Slop oil facilities, including tanks, are included in this term along with storage vessels and auxiliary equipment located between individual drain systems and the oil-water separator. This term does not include storage vessels or auxiliary equipment which do not come in contact with or store oily wastewater.

Oily wastewater means wastewater generated during the refinery process which contains oil, emulsified oil, or other hydrocarbons. Oily wastewater originates from a variety of refinery processes including cooling water, condensed stripping steam, tank draw-off, and contact process water.

Petroleum means the crude oil removed from the earth and the oils derived from tar sands, shale, and coal.

Petroleum refinery means any facility engaged in producing gasoline, kerosene, distillate fuel oils, residual fuel oils, lubricants, or other products through the distillation of petroleum, or through the redistillation of petroleum, cracking, or reforming unfinished petroleum derivatives.

Sewer line means a lateral, trunk line, branch line, ditch, channel, or other conduit used to convey refinery wastewater to downstream components of a refinery wastewater treatment system. This term does not include buried, below-grade sewer lines.

Slop oil means the floating oil and solids that accumulate on the surface of an oil-water separator.

Storage vessel means any tank, reservoir, or container used for the storage of petroleum liquids, including oily wastewater.

Stormwater sewer system means a drain and collection system designed and operated for the sole purpose of collecting stormwater and which is segregated from the process wastewater collection system.

Wastewater system means any component, piece of equipment, or installation that receives, treats, or processes oily wastewater from petroleum refinery process units.

Water seal controls means a seal pot, p-leg trap, or other type of trap filled with water that has a design capability to create a water barrier between the sewer and the atmosphere.

[53 FR 47623, Nov. 23, 1985, as amended at 60 FR 43259, Aug. 18, 1995]

§ 60.692-1 Standards: General.

(a) Each owner or operator subject to the provisions of this subpart shall comply with the requirements of §60.692-1 to 60.692-5 and with §60.693-1 and 60.693-2, except during periods of startup, shutdown, or malfunction.

(b) Compliance with §60.692-1 to 60.692-5 and with §60.693-1 and 60.693-2 will be determined by review of records and reports, review of performance test results, and inspection using the methods and procedures specified in §60.696.

(c) Permission to use alternative means of emission limitation to meet the requirements of §60.692-2 through 60.692-4 may be granted as provided in §60.694.

(d)(1) Stormwater sewer systems are not subject to the requirements of this subpart.

(2) Ancillary equipment, which is physically separate from the wastewater system and does not come in contact with or store oily wastewater, is not subject to the requirements of this subpart.

(3) Non-contact cooling water systems are not subject to the requirements of this subpart.

(4) An owner or operator shall demonstrate compliance with the exclusions in paragraphs (d)(1), (2), and (3) of this section as provided in §60.697 (h), (i), and (j).

§ 60.692-2 Standards: Individual drain systems.

(a)(1) Each drain shall be equipped with water seal controls.

(2) Each drain in active service shall be checked by visual or physical inspection initially and monthly thereafter for indications of low water levels or other conditions that would reduce the effectiveness of the water seal controls.

(3) Except as provided in paragraph (a)(4) of this section, each drain out of active service

shall be checked by visual or physical inspection initially and weekly thereafter for indications of low water levels or other problems that could result in VOC emissions.

(4) As an alternative to the requirements in paragraph (a)(3) of this section, if an owner or operator elects to install a tightly sealed cap or plug over a drain that is out of service, inspections shall be conducted initially and semiannually to ensure caps or plugs are in place and properly installed.

(5) Whenever low water levels or missing or improperly installed caps or plugs are identified, water shall be added or first efforts at repair shall be made as soon as practicable, but not later than 24 hours after detection, except as provided in §60.692-6.

(b)(1) Junction boxes shall be equipped with a cover and may have an open vent pipe. The vent pipe shall be at least 90 cm (3 ft) in length and shall not exceed 10.2 cm (4 in) in diameter.

(2) Junction box covers shall have a tight seal around the edge and shall be kept in place at all times, except during inspection and maintenance.

(3) Junction boxes shall be visually inspected initially and semiannually thereafter to ensure that the cover is in place and to ensure that the cover has a tight seal around the edge.

(4) If a broken seal or gap is identified, first effort at repair shall be made as soon as practicable, but not later than 15 calendar days after the broken seal or gap is identified, except as provided in §60.692-6.

(c)(1) Sewer lines shall not be open to the atmosphere and shall be covered or enclosed in a manner so as to have no visual gaps or cracks in joints, seals, or other emission interfaces.

(2) The portion of each unburied sewer line shall be visually inspected initially and semiannually thereafter for indication of cracks, gaps, or other problems that could result in VOC emissions

(3) Whenever cracks, gaps, or other problems are detected, repairs shall be made as soon as practicable, but not later than 15 calendar days after identification, except as provided in §60.692-6.

(d) Except as provided in paragraph (e) of this section, each modified or reconstructed individual drain system that has a catch basin in the existing configuration prior to May 4, 1987 shall be exempt from the provisions of this section.

(e) Refinery wastewater routed through new process drains and a new first common downstream junction box, either as part of a new individual drain system or an existing individual drain system, shall not be routed through a downstream catch basin.

§ 60.692-3 Standards: Oil-water separators.

(a) Each oil-water separator tank, slop oil tank, storage vessel, or other auxiliary equipment subject to the requirements of this subpart shall be equipped and operated with a fixed roof, which meets the following specifications, except as provided in paragraph (d) of this section or in § 60.693-2.

(1) The fixed roof shall be installed to completely cover the separator tank, slop oil tank, storage vessel, or other auxiliary equipment with no separation between the roof and the wall.

(2) The vapor space under a fixed roof shall not be purged unless the vapor is directed to a control device.

(3) If the roof has access doors or openings, such doors or openings shall be gasketed, latched, and kept closed at all times during operation of the separator system, except during inspection and maintenance.

(4) Roof seals, access doors, and other openings shall be checked by visual inspection initially and semiannually thereafter to ensure that no cracks or gaps occur between the roof and wall and that access doors and other openings are closed and gasketed properly.

(5) When a broken seal or gasket or other problem is identified, first efforts at repair shall be made as soon as practicable, but not later than 15 calendar days after it is identified, except as provided in § 60.692-6.

(b) Each oil-water separator tank or auxiliary equipment with a design capacity to treat more than 16 liters per second (250 gallons per minute (gpm)) of refinery wastewater shall, in addition to the requirements in paragraph (a) of this section, be equipped and operated with a closed vent system and control device, which meet the requirements of § 60.692-5, except as provided in paragraph (c) of this section or in § 60.693-2.

(c)(1) Each modified or reconstructed oil-water separator tank with a maximum design capacity to treat less than 38 liters per second (600 gpm) of refinery wastewater which was equipped and operated with a fixed roof covering the entire separator tank or a portion of the separator tank prior to May 4, 1987 shall be exempt from the requirements of paragraph (b) of this section, but shall meet the requirements of paragraph (a) of this section, or may elect to comply with paragraph (c)(2) of this section.

(2) The owner or operator may elect to comply with the requirements of paragraph (a) of this section for the existing fixed roof covering a portion of the separator tank and comply with the requirements for floating roofs in § 60.693-2 for the remainder of the separator tank.

(d) Storage vessels, including slop oil tanks and other auxiliary tanks that are subject to the standards in §§ 60.112, 60.112a, and 60.112b and associated requirements, 40 CFR part 60, subparts K, Ka, or Kb are not subject to the requirements of this section.

(e) Slop oil from an oil-water separator tank and oily wastewater from slop oil handling equipment shall be collected, stored, transported, recycled, reused, or disposed of in an enclosed system. Once slop oil is returned to the process unit or is disposed of, it is no longer within the scope of this subpart. Equipment used in handling slop oil shall be equipped with a fixed roof meeting the requirements of paragraph (a) of this section.

(f) Each oil-water separator tank, slop oil tank, storage vessel, or other auxiliary equipment that is required to comply with paragraph (a) of this section, and not paragraph (b) of this section, may be equipped with a pressure control valve as necessary for proper system operation. The pressure control valve shall be set at the maximum pressure necessary for proper system operation, but such that the value will not vent continuously.

[53 FR 47623, Nov. 23, 1985, as amended at 60 FR 43259, Aug. 18, 1995; 65 FR 61778, Oct. 17, 2000]

§ 60.692-4 Standards: Aggregate facility.

A new, modified, or reconstructed aggregate facility shall comply with the requirements of §60.692-2 and 60.692-3.

§ 60.692-5 Standards: Closed vent systems and control devices.

(a) Enclosed combustion devices shall be designed and operated to reduce the VOC emissions vented to them with an efficiency of 95 percent or greater or to provide a minimum residence time of 0.75 seconds at a minimum temperature of 816ºC (1,500ºF).

(b) Vapor recovery systems (for example, condensers and adsorbers) shall be designed and operated to recover the VOC emissions vented to them with an efficiency of 95 percent or greater.

(c) Flares used to comply with this subpart shall comply with the requirements of 40 CFR 60.18.

(d) Closed vent systems and control devices used to comply with provisions of this subpart shall be operated at all times when emissions may be vented to them.

(e)(1) Closed vent systems shall be designed and operated with no detectable emissions, as indicated by an instrument reading of less than 500 ppm above background, as determined during the initial and semiannual inspections by the methods specified in §60.696.

(2) Closed vent systems shall be purged to direct vapor to the control device.

(3) A flow indicator shall be installed on a vent stream to a control device to ensure that the vapors are being routed to the device.

(4) All gauging and sampling devices shall be gas-tight except when gauging or sampling is taking place.

(5) When emissions from a closed system are detected, first efforts at repair to eliminate the emissions shall be made as soon as practicable, but not later than 30 calendar days from the date the emissions are detected, except as provided in §60.692-6.

§ 60.692-6 Standards: Delay of repair.

(a) Delay of repair of facilities that are subject to the provisions of this subpart will be allowed if the repair is technically impossible without a complete or partial refinery or process unit shutdown.

(b) Repair of such equipment shall occur before the end of the next refinery or process unit shutdown.

§ 60.692-7 Standards: Delay of compliance.

(a) Delay of compliance of modified individual drain systems with ancillary downstream treatment components will be allowed if compliance with the provisions of this subpart cannot be achieved without a refinery or process unit shutdown.

(b) Installation of equipment necessary to comply with the provisions of this subpart shall occur no later than the next scheduled refinery or process unit shutdown.

§ 60.693-1 Alternative standards for individual drain systems.

(a) An owner or operator may elect to construct and operate a completely closed drain system.

(b) Each completely closed drain system shall be equipped and operated with a closed vent system and control device complying with the requirements of §60.692-5.

(c) An owner or operator must notify the Administrator in the report required in 40 CFR part 60.7 that the owner or operator has elected to construct and operate a completely closed drain system.

(d) If an owner or operator elects to comply with the provisions of this section, then the owner or operator does not need to comply with the provisions of §60.692-2 or §60.694.

(e)(1) Sewer lines shall not be open to the atmosphere and shall be covered or enclosed in a manner so as to have no visual gaps or cracks in joints, seals, or other emission interfaces.

(2) The portion of each unburied sewer line shall be visually inspected initially and semiannually thereafter for indication of cracks, gaps, or other problems that could result in VOC emissions.

(3) Whenever cracks, gaps, or other problems are detected, repairs shall be made as soon as practicable, but not later than 15 calendar days after identification, except as provided in §60.692-6.

§ 60.693-2 Alternative standards for oil-water separators.

(a) An owner or operator may elect to construct and operate a floating roof on an oil-water separator tank, slop oil tank, storage vessel, or other auxiliary equipment subject to the requirements of this subpart which meets the following specifications.

(1) Each floating roof shall be equipped with a closure device between the wall of the separator and the roof edge. The closure device is to consist of a primary seal and a secondary seal.

(i) The primary seal shall be a liquid-mounted seal or a mechanical shoe seal.

(A) A liquid-mounted seal means a foam- or liquid-filled seal mounted in contact with the liquid between the wall of the separator and the floating roof. A mechanical shoe seal means a metal sheet held vertically against the wall of the separator by springs or weighted levers and is connected by braces to the floating roof. A flexible coated fabric (envelope) spans the annular space between the metal sheet and the floating roof.

(B) The gap width between the primary seal and the separator wall shall not exceed 3.8 cm (1.5 in.) at any point.

(C) The total gap area between the primary seal and the separator wall shall not exceed 67 cm^2/m (3.2 $in.^2/ft$) of separator wall perimeter.

(ii) The secondary seal shall be above the primary seal and cover the annular space between the floating roof and the wall of the separator.

(A) The gap width between the secondary seal and the separator wall shall not exceed 1.3 cm (0.5 in.) at any point.

(B) The total gap area between the secondary seal and the separator wall shall not exceed 6.7 cm^2/m (0.32 $in.in.^2/ft$) of separator wall perimeter.

(iii) The maximum gap width and total gap area shall be determined by the methods and procedures specified in § 60.696(d).

(A) Measurement of primary seal gaps shall be performed within 60 calendar days after initial installation of the floating roof and introduction of refinery wastewater and once every 5 years thereafter.

(B) Measurement of secondary seal gaps shall be performed within 60 calendar days of initial introduction of refinery wastewater and once every year thereafter.

(iv) The owner or operator shall make necessary repairs within 30 calendar days of identification of seals not meeting the requirements listed in paragraphs (a)(1) (i) and (ii) of this section.

(2) Except as provided in paragraph (a)(4) of this section, each opening in the roof shall be equipped with a gasketed cover, seal, or lid, which shall be maintained in a closed position at all times, except during inspection and maintenance.

(3) The roof shall be floating on the liquid (i.e., off the roof supports) at all times except during abnormal conditions (i.e., low flow rate).

(4) The floating roof may be equipped with one or more emergency roof drains for removal of stormwater. Each emergency roof drain shall be fitted with a slotted membrane fabric cover that covers at least 90 percent of the drain opening area or a flexible fabric sleeve seal.

(5)(i) Access doors and other openings shall be visually inspected initially and semiannually thereafter to ensure that there is a tight fit around the edges and to identify other problems that could result in VOC emissions.

(ii) When a broken seal or gasket on an access door or other opening is identified, it shall be repaired as soon as practicable, but not later than 30 calendar days after it is identified, except as provided in § 60.692-6.

(b) An owner or operator must notify the Administrator in the report required by 40 CFR 60.7 that the owner or operator has elected to construct and operate a floating roof under paragraph (a) of this section.

(c) For portions of the oil-water separator tank where it is infeasible to construct and operate a floating roof, such as the skimmer mechanism and weirs, a fixed roof meeting the requirements of § 60.692-3(a) shall be installed.

(d) Except as provided in paragraph (c) of this section, if an owner or operator elects to comply with the provisions of this section, then the owner or operator does not need to comply with the provisions of §§ 60.692-3 or 60.694 applicable to the same facilities.

[53 FR 47623, Nov. 23, 1985, as amended at 60 FR 43259, Aug. 18, 1995]

§ 60.694 Permission to use alternative means of emission limitation.

(a) If, in the Administrator's judgment, an alternative means of emission limitation will achieve a reduction in VOC emissions at least equivalent to the reduction in VOC emissions achieved by the applicable requirement in §60.692, the Administrator will publish in the Federal Register a notice permitting the use of the alternative means for purposes of compliance with that requirement. The notice may condition the permission on requirements related to the operation and maintenance of the alternative means.

(b) Any notice under paragraph (a) of this section shall be published only after notice and an opportunity for a hearing.

(c) Any person seeking permission under this section shall collect, verify, and submit to the Administrator information showing that the alternative means achieves equivalent emission reductions.

§ 60.695 Monitoring of operations.

(a) Each owner or operator subject to the provisions of this subpart shall install, calibrate, maintain, and operate according to manufacturer's specifications the following equipment, unless alternative monitoring procedures or requirements are approved for that facility by the Administrator.

(1) Where a thermal incinerator is used for VOC emission reduction, a temperature monitoring device equipped with a continuous recorder shall be used to measure the temperature of the gas stream in the combustion zone of the incinerator. The temperature monitoring device shall have an

accuracy of ±1 percent of the temperature being measured, expressed in °C, or ±0.5 °C (0.9 °F), whichever is greater.

(2) Where a catalytic incinerator is used for VOC emission reduction, temperature monitoring devices, each equipped with a continuous recorder shall be used to measure the temperature in the gas stream immediately before and after the catalyst bed of the incinerator. The temperature monitoring devices shall have an accuracy of ±1 percent of the temperature being measured, expressed in °C, or ±0.5 °C (0.9 °F), whichever is greater.

(3) Where a carbon adsorber is used for VOC emissions reduction, a monitoring device that continuously indicates and records the VOC concentration level or reading of organics in the exhaust gases of the control device outlet gas stream or inlet and outlet gas stream shall be used.

(i) For a carbon adsorption system that regenerates the carbon bed directly onsite, a monitoring device that continuously indicates and records the volatile organic compound concentration level or reading of organics in the exhaust gases of the control device outlet gas stream or inlet and outlet gas stream shall be used.

(ii) For a carbon adsorption system that does not regenerate the carbon bed directly onsite in the control device (e.g., a carbon canister), the concentration level of the organic compounds in the exhaust vent stream from the carbon adsorption system shall be monitored on a regular schedule, and the existing carbon shall be replaced with fresh carbon immediately when carbon breakthrough is indicated. The device shall be monitored on a daily basis or at intervals no greater than 20 percent of the design carbon replacement interval, whichever is greater. As an alternative to conducting this monitoring, an owner or operator may replace the carbon in the carbon adsorption system with fresh carbon at a regular predetermined time interval that is less than the carbon replacement interval that is determined by the maximum design flow rate and organic concentration in the gas stream vented to the carbon adsorption system.

(4) Where a flare is used for VOC emission reduction, the owner or operator shall comply with the monitoring requirements of 40 CFR 60.18(f)(2).

(b) Where a VOC recovery device other than a carbon adsorber is used to meet the requirements specified in § 60.692-5(a), the owner or operator shall provide to the Administrator information describing the operation of the control device and the process parameter(s) that would indicate proper operation and maintenance of the device. The Administrator may request further information and will specify appropriate monitoring procedures or requirements.

(c) An alternative operational or process parameter may be monitored if it can be demonstrated that another parameter will ensure that the control device is operated in conformance with these standards and the control device's design specifications.

[53 FR 47623, Nov. 23, 1985, as amended at 60 FR 43259, Aug. 18, 1995; 65 FR 61778, Oct. 17, 2000]

§ 60.696 Performance test methods and procedures and compliance provisions.

(a) Before using any equipment installed in compliance with the requirements of §60.692-2, §60.692-3, §60.692-4, §60.692-5, or §60.693, the owner or operator shall inspect such equipment for indications of potential emissions, defects, or other problems that may cause the requirements of this subpart not to be met. Points of inspection shall include, but are not limited to, seals, flanges, joints, gaskets, hatches, caps, and plugs.

(b) The owner or operator of each source that is equipped with a closed vent system and control device as required in §60.692-5 (other than a flare) is exempt from §60.8 of the General Provisions and shall use Method 21 to measure the emission concentrations, using 500 ppm as the no detectable emission limit. The instrument shall be calibrated each day before using. The calibration gases shall be:

(1) Zero air (less than 10 ppm of hydrocarbon in air), and

(2) A mixture of either methane or n-hexane and air at a concentration of approximately, but less than, 10,000 ppm methane or n-hexane.

(c) The owner or operator shall conduct a performance test initially, and at other times as requested by the Administrator, using the test methods and procedures in §60.18(f) to determine compliance of flares.

(d) After installing the control equipment required to meet §60.693-2(a) or whenever sources that have ceased to treat refinery wastewater for a period of 1 year or more are placed back into service, the owner or operator shall determine compliance with the standards in §60.693-2(a) as follows:

(1) The maximum gap widths and maximum gap areas between the primary seal and the separator wall and between the secondary seal and the separator wall shall be determined individually within 60 calendar days of the initial installation of the floating roof and introduction of refinery wastewater or 60 calendar days after the equipment is placed back into service using the following procedure when the separator is filled to the design operating level and when the roof is floating off the roof supports.

(i) Measure seal gaps around the entire perimeter of the separator in each place where a 0.32 cm (0.125 in.) diameter uniform probe passes freely (without forcing or binding against seal) between the seal and the wall of the separator and measure the gap width and perimetrical distance of each such location.

(ii) The total surface area of each gap described in (d)(1)(i) of this section shall be determined by using probes of various widths to measure accurately the actual distance from the wall to the seal and multiplying each such width by its respective perimetrical distance.

(iii) Add the gap surface area of each gap location for the primary seal and the secondary seal individually, divide the sum for each seal by the nominal perimeter of the separator basin and compare each to the maximum gap area as specified in §60.693-2.

(2) The gap widths and total gap area shall be determined using the procedure in paragraph (d)(1) of this section according to the following frequency:

(i) For primary seals, once every 5 years.

(ii) For secondary seals, once every year.

§ 60.697 Recordkeeping requirements.

(a) Each owner or operator of a facility subject to the provisions of this subpart shall comply with the recordkeeping requirements of this section. All records shall be retained for a period of 2 years after being recorded unless otherwise noted.

(b)(1) For individual drain systems subject to § 60.692-2, the location, date, and corrective action shall be recorded for each drain when the water seal is dry or otherwise breached, when a drain cap or plug is missing or improperly installed, or other problem is identified that could result in VOC emissions, as determined during the initial and periodic visual or physical inspection.

(2) For junction boxes subject to § 60.692-2, the location, date, and corrective action shall be recorded for inspections required by § 60.692-2(b) when a broken seal, gap, or other problem is identified that could result in VOC emissions.

(3) For sewer lines subject to §§ 60.692-2 and 60.693-1(e), the location, date, and corrective action shall be recorded for inspections required by §§ 60.692-2(c) and 60.693-1(e) when a problem is identified that could result in VOC emissions.

(c) For oil-water separators subject to § 60.692-3, the location, date, and corrective action shall be recorded for inspections required by § 60.692-3(a) when a problem is identified that could result in VOC emissions.

(d) For closed vent systems subject to § 60.692-5 and completely closed drain systems subject to § 60.693-1, the location, date, and corrective action shall be recorded for inspections required by § 60.692-5(e) during which detectable emissions are measured or a problem is identified that could result in VOC emissions.

(e)(1) If an emission point cannot be repaired or corrected without a process unit shutdown, the expected date of a successful repair shall be recorded.

(2) The reason for the delay as specified in § 60.692-6 shall be recorded if an emission point or equipment problem is not repaired or corrected in the specified amount of time.

(3) The signature of the owner or operator (or designee) whose decision it was that repair could not be effected without refinery or process shutdown shall be recorded.

(4) The date of successful repair or corrective action shall be recorded.

(f)(1) A copy of the design specifications for all equipment used to comply with the provisions of this subpart shall be kept for the life of the source in a readily accessible location.

(2) The following information pertaining to the design specifications shall be kept.

(i) Detailed schematics, and piping and instrumentation diagrams.

(ii) The dates and descriptions of any changes in the design specifications.

(3) The following information pertaining to the operation and maintenance of closed drain systems and closed vent systems shall be kept in a readily accessible location.

(i) Documentation demonstrating that the control device will achieve the required control efficiency during maximum loading conditions shall be kept for the life of the facility. This documentation is to include a general description of the gas streams that enter the control device, including flow and volatile organic compound content under varying liquid level conditions (dynamic and static) and manufacturer's design specifications for the control device. If an enclosed combustion device with a minimum residence time of 0.75 seconds and a minimum temperature of 816 ºC (1,500 ºF) is used to meet the 95-percent requirement, documentation that those conditions exist is sufficient to meet the requirements of this paragraph.

(ii) For a carbon adsorption system that does not regenerate the carbon bed directly onsite in the control device such as a carbon canister, the design analysis shall consider the vent stream composition, constituent concentrations, flow rate, relative humidity, and temperature. The design analysis shall also establish the design exhaust vent stream organic compound concentration level, capacity of carbon bed, type and working capacity of activated carbon used for carbon bed, and design carbon replacement interval based on the total carbon working capacity of the control device and source operating schedule.

(iii) Periods when the closed vent systems and control devices required in § 60.692 are not operated as designed, including periods when a flare pilot does not have a flame shall be recorded and kept for 2 years after the information is recorded.

(iv) Dates of startup and shutdown of the closed vent system and control devices required in § 60.692 shall be recorded and kept for 2 years after the information is recorded.

(v) The dates of each measurement of detectable emissions required in §§ 60.692, 60.693, or 60.692-5 shall be recorded and kept for 2 years after the information is recorded.

(vi) The background level measured during each detectable emissions measurement shall be recorded and kept for 2 years after the information is recorded.

(vii) The maximum instrument reading measured during each detectable emission measurement shall be recorded and kept for 2 years after the information is recorded.

(viii) Each owner or operator of an affected facility that uses a thermal incinerator shall maintain continuous records of the temperature of the gas stream in the combustion zone of the incinerator and records of all 3-hour periods of operation during which the average temperature of the gas stream in the combustion zone is more than 28 ºC (50 ºF) below the design combustion zone temperature, and shall keep such records for 2 years after the information is recorded.

(ix) Each owner or operator of an affected facility that uses a catalytic incinerator shall maintain continuous records of the temperature of the gas stream both upstream and downstream of the catalyst bed of the incinerator, records of all 3-hour periods of operation during which the average temperature measured before the catalyst bed is more than 28 ºC (50 ºF) below the design gas stream temperature, and records of all 3-hour periods during which the average temperature difference across the catalyst bed is less than 80 percent of the design temperature difference, and shall keep such records for 2 years after the information is recorded.

(x) Each owner or operator of an affected facility that uses a carbon adsorber shall maintain continuous records of the VOC concentration level or reading of organics of the control device outlet gas stream or inlet and outlet gas stream and records of all 3-hour periods of operation during which the average VOC concentration level or reading of organics in the exhaust gases, or inlet and outlet gas stream, is more than 20 percent greater than the design exhaust gas concentration level, and shall keep such records for 2 years after the information is recorded.

(A) Each owner or operator of an affected facility that uses a carbon adsorber which is regenerated directly onsite shall maintain continuous records of the volatile organic compound concentration level or reading of organics of the control device outlet gas stream or inlet and outlet gas stream and records of all 3-hour periods of operation during which the average volatile organic compound concentration level or reading of organics in the exhaust gases, or inlet and outlet gas stream, is more than 20 percent greater than the design exhaust gas concentration level, and shall keep such records for 2 years after the information is recorded.

(B) If a carbon adsorber that is not regenerated directly onsite in the control device is used, then the owner or operator shall maintain records of dates and times when the control device is monitored, when breakthrough is measured, and shall record the date and time that the existing carbon in the control device is replaced with fresh carbon.

(g) If an owner or operator elects to install a tightly sealed cap or plug over a drain that is out of active service, the owner or operator shall keep for the life of a facility in a readily accessible location, plans or specifications which indicate the location of such drains.

(h) For stormwater sewer systems subject to the exclusion in § 60.692-1(d)(1), an owner or operator shall keep for the life of the facility in a readily accessible location, plans or specifications which demonstrate that no wastewater from any process units or equipment is directly discharged to the stormwater sewer system.

(i) For ancillary equipment subject to the exclusion in § 60.692- 1(d)(2), an owner or operator shall keep for the life of a facility in a readily accessible location, plans or specifications which demonstrate that the ancillary equipment does not come in contact with or store oily wastewater.

(j) For non-contact cooling water systems subject to the exclusion in § 60.692-1(d)(3), an owner or operator shall keep for the life of the facility in a readily accessible location, plans or specifications which demonstrate that the cooling water does not contact hydrocarbons or oily wastewater and is not recirculated through a cooling tower.

(k) For oil-water separators subject to § 60.693-2, the location, date, and corrective action shall be recorded for inspections required by §§ 60.693-2(a)(1)(iii)(A) and (B), and shall be maintained for the time period specified in paragraphs (k)(1) and (2) of this section.

(1) For inspections required by § 60.693-2(a)(1)(iii)(A), ten years after the information is recorded.

(2) For inspections required by § 60.693-2(a)(1)(iii)(B), two years after the information is recorded.

[53 FR 47623, Nov. 23, 1985, as amended at 60 FR 43259, Aug. 18, 1995; 65 FR 61778, Oct. 17, 2000]

§ 60.698 Reporting requirements.

(a) An owner or operator electing to comply with the provisions of § 60.693 shall notify the Administrator of the alternative standard selected in the report required in § 60.7.

(b)(1) Each owner or operator of a facility subject to this subpart shall submit to the Administrator within 60 days after initial startup a certification that the equipment necessary to comply with these standards has been installed and that the required initial inspections or tests of process drains, sewer lines, junction boxes, oil-water separators, and closed vent systems and control devices have been carried out in accordance with these

standards. Thereafter, the owner or operator shall submit to the Administrator semiannually a certification that all of the required inspections have been carried out in accordance with these standards.

(2) Each owner or operator of an affected facility that uses a flare shall submit to the Administrator within 60 days after initial startup, as required under § 60.8(a), a report of the results of the performance test required in § 60.696(c).

(c) A report that summarizes all inspections when a water seal was dry or otherwise breached, when a drain cap or plug was missing or improperly installed, or when cracks, gaps, or other problems were identified that could result in VOC emissions, including information about the repairs or corrective action taken, shall be submitted initially and semiannually thereafter to the Administrator.

(d) As applicable, a report shall be submitted semiannually to the Administrator that indicates:

(1) Each 3-hour period of operation during which the average temperature of the gas stream in the combustion zone of a thermal incinerator, as measured by the temperature monitoring device, is more than 28 °C (50 °F) below the design combustion zone temperature,

(2) Each 3-hour period of operation during which the average temperature of the gas stream immediately before the catalyst bed of a catalytic incinerator, as measured by the temperature monitoring device, is more than 28 °C (50 °F) below the design gas stream temperature, and any 3-hour period during which the average temperature difference across the catalyst bed (i.e., the difference between the temperatures of the gas stream immediately before and after the catalyst bed), as measured by the temperature monitoring device, is less than 80 percent of the design temperature difference, or,

(3) Each 3-hour period of operation during which the average VOC concentration level or reading of organics in the exhaust gases from a carbon adsorber is more than 20 percent greater than the design exhaust gas concentration level or reading.

(i) Each 3-hour period of operation during which the average volatile organic compound concentration level or reading of organics in the exhaust gases from a carbon adsorber which is regenerated directly onsite is more than 20 percent greater than the design exhaust gas concentration level or reading.

(ii) Each occurrence when the carbon in a carbon adsorber system that is not regenerated directly onsite in the control device is not replaced at the predetermined interval specified in § 60.695(a)(3)(ii).

(e) If compliance with the provisions of this subpart is delayed pursuant to § 60.692-7, the notification required under 40 CFR 60.7(a)(4) shall include the estimated date of the next scheduled refinery or process unit shutdown after the date of notification and the reason why compliance with the standards is technically impossible without a refinery or process unit shutdown.

[53 FR 47623, Nov. 23, 1985, as amended at 60 FR 43260, Aug. 18, 1995]

§ 60.699 Delegation of authority.

(a) In delegating implementation and enforcement authority to a State under section 111(c) of the Act, the authorities contained in paragraph (b) of this section shall be retained by the Administrator and not transferred to a State.

(b) Authorities which will not be delegated to States:

§ 60.694 Permission to use alternative means of emission limitations.

[53 FR 47623, Nov. 23, 1985]

APPENDIX D

40 CFR 60 SUBPART Db

§ 60.40b Applicability and delegation of authority.

(a) The affected facility to which this subpart applies is each steam generating unit that commences construction, modification, or reconstruction after June 19, 1984, and that has a heat input capacity from fuels combusted in the steam generating unit of greater than 29 MW (100 million Btu/hour).

(b) Any affected facility meeting the applicability requirements under paragraph (a) of this section and commencing construction, modification, or reconstruction after June 19, 1984, but on or before June 19, 1986, is subject to the following standards:

(1) Coal-fired affected facilities having a heat input capacity between 29 and 73 MW (100 and 250 million Btu/hour), inclusive, are subject to the particulate matter and nitrogen oxides standards under this subpart.

(2) Coal-fired affected facilities having a heat input capacity greater than 73 MW (250 million Btu/hour) and meeting the applicability requirements under subpart D (Standards of performance for fossil-fuel-fired steam generators; §60.40) are subject to the particulate matter and nitrogen oxides standards under this subpart and to the sulfur dioxide standards under subpart D (§60.43).

(3) Oil-fired affected facilities having a heat input capacity between 29 and 73 MW (100 and 250 million Btu/hour), inclusive, are subject to the nitrogen oxides standards under this subpart.

(4) Oil-fired affected facilities having a heat input capacity greater than 73 MW (250 million Btu/hour) and meeting the applicability requirements under subpart D (Standards of performance for fossil-fuel-fired steam generators; §60.40) are also subject to the nitrogen oxides standards under this subpart and the particulate matter and sulfur dioxide standards under subpart D (§60.42 and §60.43).

(c) Affected facilities which also meet the applicability requirements under subpart J (Standards of performance for petroleum refineries; §60.104) are subject to the particulate matter and nitrogen oxides standards under this subpart and the sulfur dioxide standards under subpart J (§60.104).

(d) Affected facilities which also meet the applicability requirements under subpart E (Standards of performance for incinerators; §60.50) are subject to the nitrogen oxides and particulate matter standards under this subpart.

(e) Steam generating units meeting the applicability requirements under subpart Da (Standards of performance for electric utility steam generating units; §60.40a) are not subject to this subpart.

(f) Any change to an existing steam generating unit for the sole purpose of combusting gases containing TRS as defined under §60.281 is not considered a modification under §60.14 and the steam generating unit is not subject to this subpart.

(g) In delegating implementation and enforcement authority to a State under section 111(c) of the Act, the following authorities shall be retained by the Administrator and not transferred to a State.

(1) Section 60.44b(f).

(2) Section 60.44b(g).

(3) Section 60.49b(a)(4).

(h) Affected facilities which meet the applicability requirements under subpart Eb (Standards of performance for municipal waste combustors; §60.50b) are not subject to this subpart.

(i) Unless and until subpart GG of this part is revised to extend the applicability of subpart GG of this part to steam generator units subject to this subpart, this subpart will continue to apply to combined cycle gas turbines that are capable of combusting more than 29 MW (100 million Btu/hour) heat input of fossil fuel in the steam generator. Only emissions resulting from combustion of fuels in the steam generating unit are subject to this subpart. (The gas turbine emissions are subject to subpart GG of this part.)

(j) Any affected facility meeting the applicability requirements under paragraph (a) of this section and commencing construction, modification, or reconstruction after June 19, 1986 is not subject to Subpart D (Standards of Performance for Fossil-Fuel-Fired Steam Generators, §60.40).

[52 FR 47842, Dec. 16, 1987, as amended at 63 FR 49454, Sept. 16, 1998; 65 FR 61752, Oct. 17, 2000]

§ 60.41b Definitions.

As used in this subpart, all terms not defined herein shall have the meaning given them in the Act and in subpart A of this part.

Annual capacity factor means the ratio between the actual heat input to a steam generating unit from the fuels listed in §60.42b(a), §60.43b(a), or §60.44b(a), as applicable, during a calendar year and the potential heat input to the steam generating unit had it been operated for 8,760 hours during a calendar year at the maximum steady state design heat input capacity. In the case of steam generating units that are rented or leased, the actual heat input shall be determined based on the combined heat input from all operations of the affected facility in a calendar year.

Byproduct/waste means any liquid or gaseous substance produced at chemical manufacturing plants, petroleum refineries, or pulp and paper mills (except natural gas, distillate oil, or residual oil) and combusted in a steam generating unit for heat recovery or for disposal. Gaseous substances with carbon dioxide levels greater than 50 percent or carbon monoxide levels greater than 10 percent are not byproduct/waste for the purpose of this subpart.

Chemical manufacturing plants means industrial plants which are classified by the Department of Commerce under Standard Industrial Classification (SIC) Code 28.

Coal means all solid fuels classified as anthracite, bituminous, subbituminous, or lignite by the American Society of Testing and Materials in ASTM D388-77, 90, 91, 95, or 98a, Standard Specification for Classification of Coals by Rank (IBR-see §60.17), coal refuse, and petroleum coke. Coal-derived synthetic fuels, including but not limited to solvent refined coal, gasified coal, coal-oil mixtures, and coal-water mixtures, are also included in this definition for the purposes of this subpart.

Coal refuse means any byproduct of coal mining or coal cleaning operations with an ash content greater than 50 percent, by weight, and a heating value less than 13,900 kJ/kg (6,000 Btu/lb) on a dry basis.

Combined cycle system means a system in which a separate source, such as a gas turbine, internal combustion engine, kiln, etc., provides exhaust gas to a heat recovery steam generating unit.

Conventional technology means wet flue gas desulfurization (FGD) technology, dry FGD technology, atmospheric fluidized bed combustion technology, and oil hydrodesulfurization technology.

Distillate oil means fuel oils that contain 0.05 weight percent nitrogen or less and comply with the specifications for fuel oil numbers 1 and 2, as defined by the American Society of Testing and Materials in ASTM D396-78, 89, 90, 92, 96, or 98, Standard Specifications for Fuel Oil (incorporated by reference-see §60.17).

Dry flue gas desulfurization technology means a sulfur dioxide control system that is located downstream of the steam generating unit and removes sulfur oxides from the combustion gases of the steam generating unit by contacting the combustion gases with an alkaline slurry or solution and forming a dry powder material. This definition includes devices where the dry powder material is subsequently converted to another form. Alkaline slurries or solutions used in dry flue gas desulfurization technology include but are not limited to lime and sodium.

Duct burner means a device that combusts fuel and that is placed in the exhaust duct from another source, such as a stationary gas turbine, internal combustion engine, kiln, etc., to allow the firing of additional fuel to heat the exhaust gases before the exhaust gases enter a heat recovery steam generating unit.

Emerging technology means any sulfur dioxide control system that is not defined as

a conventional technology under this section, and for which the owner or operator of the facility has applied to the Administrator and received approval to operate as an emerging technology under §60 49b(a)(4).

Federally enforceable means all limitations and conditions that are enforceable by the Administrator, including the requirements of 40 CFR parts 60 and 61, requirements within any applicable State Implementation Plan, and any permit requirements established under 40 CFR 52.21 or under 40 CFR 51.18 and 40 CFR 51.24.

Fluidized bed combustion technology means combustion of fuel in a bed or series of beds (including but not limited to bubbling bed units and circulating bed units) of limestone aggregate (or other sorbent materials) in which these materials are forced upward by the flow of combustion air and the gaseous products of combustion.

Fuel pretreatment means a process that removes a portion of the sulfur in a fuel before combustion of the fuel in a steam generating unit.

Full capacity means operation of the steam generating unit at 90 percent or more of the maximum steady-state design heat input capacity.

Heat input means heat derived from combustion of fuel in a steam generating unit and does not include the heat input from preheated combustion air, recirculated flue gases, or exhaust gases from other sources, such as gas turbines, internal combustion engines, kilns, etc.

Heat release rate means the steam generating unit design heat input capacity (in MW or Btu/hour) divided by the furnace volume (in cubic meters or cubic feet); the furnace volume is that volume bounded by the front furnace wall where the burner is located, the furnace side waterwall, and extending to the level just below or in front of the first row of convection pass tubes.

Heat transfer medium means any material that is used to transfer heat from one point to another point.

High heat release rate means a heat release rate greater than 730,000 J/sec-m^3 (70,000 Btu/hour-ft^3).

Lignite means a type of coal classified as lignite A or lignite B by the American Society of Testing and Materials in ASTM D388-77, 90, 91, 95, or 98a, Standard Specification for Classification of Coals by Rank (IBR-see §60.17).

Low heat release rate means a heat release rate of 730,000 J/sec-m^3 (70,000 Btu/hour-ft^3) or less.

Mass-feed stoker steam generating unit means a steam generating unit where solid fuel is introduced directly into a retort or is fed directly onto a grate where it is combusted

Maximum heat input capacity means the ability of a steam generating unit to combust a stated maximum amount of fuel on a steady state basis, as determined by the physical design and characteristics of the steam generating unit.

Municipal-type solid waste means refuse, more than 50 percent of which is waste consisting of a mixture of paper, wood, yard wastes, food wastes, plastics, leather, rubber, and other combustible materials, and noncombustible materials such as glass and rock.

Natural gas means (1) a naturally occurring mixture of hydrocarbon and nonhydrocarbon gases found in geologic formations beneath the earth's surface, of which the principal constituent is methane; or (2) liquid petroleum gas, as defined by the American Society for Testing and Materials in ASTM D1835-82, , 86, 87, 91, or 97, Standard Specification for Liquid Petroleum Gases (IBR-see §60.17).

Noncontinental area means the State of Hawaii, the Virgin Islands, Guam, American Samoa, the Commonwealth of Puerto Rico, or the Northern Mariana Islands.

Oil means crude oil or petroleum or a liquid fuel derived from crude oil or petroleum, including distillate and residual oil.

Petroleum refinery means industrial plants as classified by the Department of Commerce under Standard Industrial Classification (SIC) Code 29.

Potential sulfur dioxide emission rate means the theoretical sulfur dioxide emissions (ng/J, lb/million Btu heat input) that would result from combusting fuel in an uncleaned state and without using emission control systems.

Process heater means a device that is primarily used to heat a material to initiate or promote a chemical reaction in which the material participates as a reactant or catalyst.

Pulp and paper mills means industrial plants which are classified by the Department of Commerce under North American Industry Classification System (NAICS) Code 322 or Standard Industrial Classification (SIC) Code 26.

Pulverized coal-fired steam generating unit means a steam generating unit in which pulverized coal is introduced into an air stream that carries the coal to the combustion chamber of the steam generating unit where it is fired in suspension. This includes both conventional pulverized coal-fired and micropulverized coal-fired steam generating units.

Residual oil means crude oil, fuel oil numbers 1 and 2 that have a nitrogen content greater than 0.05 weight percent, and all fuel oil numbers 4, 5 and 6, as defined by the American Society of Testing and Materials in ASTM D396-78, Standard Specifications for Fuel Oils (IBR-see §60.17).

Spreader stoker steam generating unit means a steam generating unit in which solid fuel is introduced to the combustion zone by a mechanism that throws the fuel onto a grate from above. Combustion takes place both in suspension and on the grate.

Steam generating unit means a device that combusts any fuel or byproduct/waste to produce steam or to heat water or any other heat transfer medium. This term includes any municipal-type solid waste incinerator with a heat recovery steam generating unit or any steam generating unit that combusts fuel and is part of a cogeneration system or a combined cycle system. This term does not include process heaters as they are defined in this subpart.

Steam generating unit operating day means a 24-hour period between 12:00 midnight and the following midnight during which any fuel is combusted at any time in the steam generating unit. It is not necessary for fuel to be combusted continuously for the entire 24-hour period.

Very low sulfur oil means an oil that contains no more than 0.5 weight percent sulfur or that, when combusted without sulfur dioxide emission control, has a sulfur dioxide emission rate equal to or less than 215 ng/J (0.5 lb/million Btu) heat input.

Wet flue gas desulfurization technology means a sulfur dioxide control system that is located downstream of the steam generating unit and removes sulfur oxides from the combustion gases of the steam generating unit by contacting the combustion gas with an alkaline slurry or solution and forming a liquid material. This definition applies to devices where the aqueous liquid material product of this contact is subsequently converted to other forms. Alkaline reagents used in wet flue gas desulfurization technology include, but are not limited to, lime, limestone, and sodium.

Wet scrubber system means any emission control device that mixes an aqueous stream or slurry with the exhaust gases from a steam generating unit to control emissions of particulate matter or sulfur dioxide.

Wood means wood, wood residue, bark, or any derivative fuel or residue thereof, in any form, including, but not limited to, sawdust, sander dust, wood chips, scraps, slabs, millings, shavings, and processed pellets made from wood or other forest residues.

[52 FR 47842, Dec. 16, 1987, as amended at 54 FR 51819, Dec. 18, 1989; 65 FR 61752, Oct. 17, 2000; 66 FR 49834, Oct. 1, 2001]

§ 60.42b Standard for sulfur dioxide.

(a) Except as provided in paragraphs (b), (c), (d), or (j) of this section, on and after the date on which the performance test is completed or required to be completed under §60.8 of this part, whichever date comes first, no owner or operator of an affected facility that combusts coal or oil shall cause to be discharged into the atmosphere any gases that contain sulfur dioxide in excess of 10 percent (0.10) of the potential sulfur dioxide emission rate (90 percent reduction) and that contain sulfur dioxide in excess of the

emission limit determined according to the following formula:

$$E_s = (K_aH_a + K_bH_b)/(H_a + H_b)$$

where:

E_s is the sulfur dioxide emission limit, in ng/J or lb/million Btu heat input,

K_a is 520 ng/J (or 1.2 lb/million Btu),

K_b is 340 ng/J (or 0.80 lb/million Btu),

H_a is the heat input from the combustion of coal, in J (million Btu),

H_b is the heat input from the combustion of oil, in J (million Btu).

Only the heat input supplied to the affected facility from the combustion of coal and oil is counted under this section. No credit is provided for the heat input to the affected facility from the combustion of natural gas, wood, municipal-type solid waste, or other fuels or heat input to the affected facility from exhaust gases from another source, such as gas turbines, internal combustion engines, kilns, etc.

(b) On and after the date on which the performance test is completed or required to be completed under §60.8 of this part, whichever comes first, no owner or operator of an affected facility that combusts coal refuse alone in a fluidized bed combustion steam generating unit shall cause to be discharged into the atmosphere any gases that contain sulfur dioxide in excess of 20 percent of the potential sulfur dioxide emission rate (80 percent reduction) and that contain sulfur dioxide in excess of 520 ng/J (1.2 lb/million Btu) heat input. If coal or oil is fired with coal refuse, the affected facility is subject to paragraph (a) or (d) of this section, as applicable.

(c) On and after the date on which the performance test is completed or is required to be completed under §60.8 of this part, whichever comes first, no owner or operator of an affected facility that combusts coal or oil, either alone or in combination with any other fuel, and that uses an emerging technology for the control of sulfur dioxide emissions, shall cause to be discharged into the atmosphere any gases that contain sulfur dioxide in excess of 50 percent of the potential sulfur dioxide emission rate (50 percent reduction) and that contain sulfur dioxide in excess of the emission limit determined according to the following formula:

$$E_s = (K_cH_c + K_dH_d)/(H_c + H_d)$$

where:

E_s is the sulfur dioxide emission limit, expressed in ng/J (lb/million Btu) heat input,

K_c is 260 ng/J (0.60 lb/million Btu),

K_d is 170 ng/J (0.40 lb/million Btu),

H_c is the heat input from the combustion of coal, J (million Btu),

H_d is the heat input from the combustion of oil, J (million Btu).

Only the heat input supplied to the affected facility from the combustion of coal and oil is counted under this section. No credit is provided for the heat input to the affected facility from the combustion of natural gas, wood, municipal-type solid waste, or other fuels, or from the heat input to the affected facility from exhaust gases from another source, such as gas turbines, internal combustion engines, kilns, etc.

(d) On and after the date on which the performance test is completed or required to be completed under §60.8 of this part, whichever comes first, no owner or operator of an affected facility listed in paragraphs (d)(1), (2), or (3) of this section shall cause to be discharged into the atmosphere any gases that contain sulfur dioxide in excess of 520 ng/J (1.2 lb/million Btu) heat input if the affected facility combusts coal, or 215 ng/J (0.5 lb/million Btu) heat input if the affected facility combusts oil other than very low sulfur oil. Percent reduction requirements are not applicable to affected facilities under paragraphs (d)(1), (2), or (3).

(1) Affected facilities that have an annual capacity factor for coal and oil of 30 percent (0.30) or less and are subject to a Federally enforceable permit limiting the operation of the affected facility to an annual capacity factor for coal and oil of 30 percent (0.30) or less;

(2) Affected facilities located in a noncontinental area; or

(3) Affected facilities combusting coal or oil, alone or in combination with any other fuel, in a duct burner as part of a combined cycle system where 30 percent (0.30) or less of the heat input to the steam generating unit is from combustion of coal and oil in the duct burner and 70 percent (0.70) or more of the heat input to the steam generating unit is from the exhaust gases entering the duct burner.

(e) Except as provided in paragraph (f) of this section, compliance with the emission limits, fuel oil sulfur limits, and/or percent reduction requirements under this section are determined on a 30-day rolling average basis.

(f) Except as provided in paragraph (j)(2) of this section, compliance with the emission limits or fuel oil sulfur limits under this section is determined on a 24-hour average basis for affected facilities that (1) have a Federally enforceable permit limiting the annual capacity factor for oil to 10 percent or less, (2) combust only very low sulfur oil, and (3) do not combust any other fuel.

(g) Except as provided in paragraph (i) of this section, the sulfur dioxide emission limits and percent reduction requirements under this section apply at all times, including periods of startup, shutdown, and malfunction.

(h) Reductions in the potential sulfur dioxide emission rate through fuel pretreatment are not credited toward the percent reduction requirement under paragraph (c) of this section unless:

(1) Fuel pretreatment results in a 50 percent or greater reduction in potential sulfur dioxide emissions and

(2) Emissions from the pretreated fuel (without combustion or post combustion sulfur dioxide control) are equal to or less than the emission limits specified in paragraph (c) of this section.

(i) An affected facility subject to paragraph (a), (b), or (c) of this section may combust very low sulfur oil or natural gas when the sulfur dioxide control system is not being operated because of malfunction or maintenance of the sulfur dioxide control system.

(j) Percent reduction requirements are not applicable to affected facilities combusting only very low sulfur oil. The owner or operator of an affected facility combusting very low sulfur oil shall demonstrate that the oil meets the definition of very low sulfur oil by: (1) Following the performance testing procedures as described in §60.45b(c) or §60.45b(d), and following the monitoring procedures as described in §60.47b(a) or §60.47b(b) to determine sulfur dioxide emission rate or fuel oil sulfur content; or (2) maintaining fuel receipts as described in §60.49b(r).

[52 FR 47842, Dec. 16, 1987, as amended at 54 FR 51819, Dec. 18, 1989; 65 FR 61752, Oct. 17, 2000]

§ 60.43b Standard for particulate matter.

(a) On and after the date on which the initial performance test is completed or is required to be completed under §60.8 of this part, whichever comes first, no owner or operator of an affected facility which combusts coal or combusts mixtures of coal with other fuels, shall cause to be discharged into the atmosphere from that affected facility any gases that contain particulate matter in excess of the following emission limits:

(1) 22 ng/J (0.051 lb/million Btu) heat input,

(i) If the affected facility combusts only coal, or

(ii) If the affected facility combusts coal and other fuels and has an annual capacity factor for the other fuels of 10 percent (0.10) or less.

(2) 43 ng/J (0.10 lb/million Btu) heat input if the affected facility combusts coal and other fuels and has an annual capacity factor for the other fuels greater than 10 percent (0.10) and is subject to a federally enforceable requirement limiting operation of the affected facility to an annual capacity factor greater than 10 percent (0.10) for fuels other than coal.

(3) 86 ng/J (0.20 lb/million Btu) heat input if the affected facility combusts coal or coal and other fuels and

(i) Has an annual capacity factor for coal or coal and other fuels of 30 percent (0.30) or less,

(ii) Has a maximum heat input capacity of 73 MW (250 million Btu/hour) or less,

(iii) Has a federally enforceable requirement limiting operation of the affected facility to an annual capacity factor of 30 percent (0.30) or less for coal or coal and other solid fuels, and

(iv) Construction of the affected facility commenced after June 19, 1984, and before November 25, 1986.

(b) On and after the date on which the performance test is completed or required to be completed under 60.8 of this part, whichever date comes first, no owner or operator of an affected facility that combusts oil (or mixtures of oil with other fuels) and uses a conventional or emerging technology to reduce sulfur dioxide emissions shall cause to be discharged into the atmosphere from that affected facility any gases that contain particulate matter in excess of 43 ng/J (0.10 lb/million Btu) heat input.

(c) On and after the date on which the initial performance test is completed or is required to be completed under §60.8 of this part, whichever date comes first, no owner or operator of an affected facility that combusts wood, or wood with other fuels, except coal, shall cause to be discharged from that affected facility any gases that contain particulate matter in excess of the following emission limits:

(1) 43 ng/J (0.10 lb/million Btu) heat input if the affected facility has an annual capacity factor greater than 30 percent (0.30) for wood.

(2) 86 ng/J (0.20 lb/million Btu) heat input if

(i) The affected facility has an annual capacity factor of 30 percent (0.30) or less for wood,

(ii) Is subject to a federally enforceable requirement limiting operation of the affected facility to an annual capacity factor of 30 percent (0.30) or less for wood, and

(iii) Has a maximum heat input capacity of 73 MW (250 million Btu/hour) or less.

(d) On and after the date on which the initial performance test is completed or is required to be completed under §60.8 of this part, whichever date comes first, no owner or operator of an affected facility that combusts municipal-type solid waste or mixtures of municipal-type solid waste with other fuels, shall cause to be discharged into the atmosphere from that affected facility any gases that contain particulate matter in excess of the following emission limits:

(1) 43 ng/J (0.10 lb/million Btu) heat input,

(i) If the affected facility combusts only municipal-type solid waste, or

(ii) If the affected facility combusts municipal-type solid waste and other fuels and has an annual capacity factor for the other fuels of 10 percent (0.10) or less.

(2) 86 ng/J (0.20 lb/million Btu) heat input if the affected facility combusts municipal-type solid waste or municipal-type solid waste and other fuels; and

(i) Has an annual capacity factor for municipal-type solid waste and other fuels of 30 percent (0.30) or less,

(ii) Has a maximum heat input capacity of 73 MW (250 million Btu/hour) or less,

(iii) Has a federally enforceable requirement limiting operation of the affected facility to an annual capacity factor of 30 percent (0.30) for municipal-type solid waste, or municipal-type solid waste and other fuels, and

(iv) Construction of the affected facility commenced after June 19, 1984, but before November 25, 1986.

(e) For the purposes of this section, the annual capacity factor is determined by dividing the actual heat input to the steam generating unit during the calendar year from the combustion of coal, wood, or municipal-type solid waste, and other fuels, as applicable, by the potential heat input to the steam generating unit if the steam generating unit had been operated for 8,760 hours at the maximum design heat input capacity.

(f) On and after the date on which the initial performance test is completed or is required to be completed under 60.8 of this part, whichever date comes first, no owner or operator of an affected facility that combusts coal, oil, wood, or mixtures of these fuels with any other fuels shall cause to be discharged into the atmosphere any gases that exhibit greater than 20 percent opacity (6-minute average), except for one 6-minute period per hour of not more than 27 percent opacity.

(g) The particulate matter and opacity standards apply at all times, except during periods of startup, shutdown or malfunction.

[52 FR 47842, Dec. 16, 1987, as amended at 54 FR 51819, Dec. 18, 1989; 65 FR 61752, Oct. 17, 2000]

§ 60.44b Standard for nitrogen oxides.

(a) Except as provided under paragraphs (k) and (l) of this section, on and after the date on which the initial performance test is completed or is required to be completed under §60.8 of this part, whichever date comes first, no owner or operator of an affected facility that is subject to the provisions of this section and that combusts only coal, oil, or natural gas shall cause to be discharged into the atmosphere from that affected facility any gases that contain nitrogen oxides (expressed as NO_2) in excess of the following emission limits:

Fuel/Steam generating unit type	Nitrogen oxide emission limits ng/J (lb/million Btu) (expressed as NO_2) heat input
(1) Natural gas and distillate oil, except (4):	
(i) Low heat release rate	43 (0.10)
(ii) High heat release rate	86 (0.20)
(2) Residual oil:	
(i) Low heat release rate	130 (0.30)
(ii) High heat release rate	170 (0.40)
(3) Coal:	
(i) Mass-feed stoker	210 (0.50)
(ii) Spreader stoker and fluidized bed combustion	260 (0.60)
(iii) Pulverized coal	300 (0.70)
(iv) Lignite, except (v)	260 (0.30)
(v) Lignite mined in North Dakota, South Dakota, or Montana and combusted in a slag tap furnace	340 (0.80)
(vi) Coal-derived synthetic fuels	210 (0.50)
(4) Duct burner used in a combined cycle system:	
(i) Natural gas and distillate oil	86 (0.20)
(ii) Residual oil	170 (0.40)

(b) Except as provided under paragraphs (k) and (l) of this section, on and after the date on which the initial performance test is completed or is required to be completed under § 60.8 of this part, whichever date comes first, no owner or operator of an affected facility that simultaneously combusts mixtures of coal, oil, or natural gas shall cause to be discharged into the atmosphere from that affected facility any gases that contain nitrogen oxides in excess of a limit determined by the use of the following formula:

$$E_n = \left[\frac{(EL_{go}H_{go}) + (EL_{ro}H_{ro}) + (EL_cH_c)}{(H_{go} + H_{ro} + H_c)} \right]$$

where:

E_n is the nitrogen oxides emission limit (expressed as NO_2), ng/J (lb/million Btu),

EL_{go} is the appropriate emission limit from paragraph (a)(1) for combustion of natural gas or distillate oil, ng/J (lb/million Btu),

H_{go} is the heat input from combustion of natural gas or distillate oil,

EL_{ro} is the appropriate emission limit from paragraph (a)(2) for combustion of residual oil,

H_{ro} is the heat input from combustion of residual oil,

EL_c is the appropriate emission limit from paragraph (a)(3) for combustion of coal, and

H_c is the heat input from combustion of coal.

(c) Except as provided under paragraph (l) of this section, on and after the date on which the initial performance test is completed or is

required to be completed under §60.8 of this part, whichever date comes first, no owner or operator of an affected facility that simultaneously combusts coal or oil, or a mixture of these fuels with natural gas, and wood, municipal-type solid waste, or any other fuel shall cause to be discharged into the atmosphere any gases that contain nitrogen oxides in excess of the emission limit for the coal or oil, or mixtures of these fuels with natural gas combusted in the affected facility, as determined pursuant to paragraph (a) or (b) of this section, unless the affected facility has an annual capacity factor for coal or oil, or mixture of these fuels with natural gas of 10 percent (0.10) or less and is subject to a federally enforceable requirement that limits operation of the affected facility to an annual capacity factor of 10 percent (0.10) or less for coal, oil, or a mixture of these fuels with natural gas.

(d) On and after the date on which the initial performance test is completed or is required to be completed under §60.8 of this part, whichever date comes first, no owner or operator of an affected facility that simultaneously combusts natural gas with wood, municipal-type solid waste, or other solid fuel, except coal, shall cause to be discharged into the atmosphere from that affected facility any gases that contain nitrogen oxides in excess of 130 ng/J (0.30 lb/million Btu) heat input unless the affected facility has an annual capacity factor for natural gas of 10 percent (0.10) or less and is subject to a federally enforceable requirement that limits operation of the affected facility to an annual capacity factor of 10 percent (0.10) or less for natural gas.

(e) Except as provided under paragraph (l) of this section, on and after the date on which the initial performance test is completed or is required to be completed under §60.8 of this part, whichever date comes first, no owner or operator of an affected facility that simultaneously combusts coal, oil, or natural gas with byproduct/waste shall cause to be discharged into the atmosphere from that affected facility any gases that contain nitrogen oxides in excess of an emission limit determined by the following formula unless the affected facility has an annual capacity factor for coal, oil, and natural gas of 10 percent (0.10) or less and is subject to a federally enforceable requirement which limits operation of the affected facility to an annual capacity factor of 10 percent (0.10) or less:

$$E_n = \left[\frac{(EL_{go}H_{go}) + (EL_{ro}H_{ro}) + (EL_cH_c)}{(H_{go} + H_{ro} + H_c)} \right]$$

where:

E_n is the nitrogen oxides emission limit (expressed as NO_2), ng/J (lb/million Btu)

EL_{go} is the appropriate emission limit from paragraph (a)(1) for combustion of natural gas or distillate oil, ng/J (lb/million Btu).

H_{go} is the heat input from combustion of natural gas, distillate oil and gaseous byproduct/waste, ng/J (lb/million Btu).

EL_{ro} is the appropriate emission limit from paragraph (a)(2) for combustion of residual oil, ng/J (lb/million Btu)

H_{ro} is the heat input from combustion of residual oil and/or liquid byproduct/waste.

EL_c is the appropriate emission limit from paragraph (a)(3) for combustion of coal, and

H_c is the heat input from combustion of coal.

(f) Any owner or operator of an affected facility that combusts byproduct/waste with either natural gas or oil may petition the Administrator within 180 days of the initial startup of the affected facility to establish a nitrogen oxides emission limit which shall apply specifically to that affected facility when the byproduct/waste is combusted. The petition shall include sufficient and appropriate data, as determined by the Administrator, such as nitrogen oxides emissions from the affected facility, waste composition (including nitrogen content), and combustion conditions to allow the Administrator to confirm that the affected facility is unable to comply with the emission limits in paragraph (e) of this section and to determine the appropriate emission limit for the affected facility.

(1) Any owner or operator of an affected facility petitioning for a facility-specific nitrogen oxides emission limit under this section shall:

(i) Demonstrate compliance with the emission limits for natural gas and distillate oil in paragraph (a)(1) of this section or for residual oil in paragraph (a)(2) of this section, as appropriate, by conducting a 30-day performance test as provided in §60.46b(e). During the performance test only natural gas, distillate oil, or residual oil shall be combusted in the affected facility; and

(ii) Demonstrate that the affected facility is unable to comply with the emission limits for natural gas and distillate oil in paragraph (a)(1) of this section or for residual oil in paragraph (a)(2) of this section, as appropriate, when gaseous or liquid byproduct/waste is combusted in the affected facility under the same conditions and using the same technological system of emission reduction applied when demonstrating compliance under paragraph (f)(1)(i) of this section.

(2) The nitrogen oxides emission limits for natural gas or distillate oil in paragraph (a)(1) of this section or for residual oil in paragraph (a)(2) of this section, as appropriate, shall be applicable to the affected facility until and unless the petition is approved by the Administrator. If the petition is approved by the Administrator, a facility-specific nitrogen oxides emission limit will be established at the nitrogen oxides emission level achievable when the affected facility is combusting oil or natural gas and byproduct/waste in a manner that the Administrator determines to be consistent with minimizing nitrogen oxides emissions.

(g) Any owner or operator of an affected facility that combusts hazardous waste (as defined by 40 CFR part 261 or 40 CFR part 761) with natural gas or oil may petition the Administrator within 180 days of the initial startup of the affected facility for a waiver from compliance with the nitrogen oxides emission limit which applies specifically to that affected facility. The petition must include sufficient and appropriate data, as determined by the Administrator, on nitrogen oxides emissions from the affected facility, waste destruction efficiencies, waste composition (including nitrogen content), the quantity of specific wastes to be combusted and combustion conditions to allow the Administrator to determine if the affected facility is able to comply with the nitrogen oxides emission limits required by this section. The owner or operator of the affected facility shall demonstrate that when hazardous waste is combusted in the affected facility, thermal destruction efficiency requirements for hazardous waste specified in an applicable federally enforceable requirement preclude compliance with the nitrogen oxides emission limits of this section. The nitrogen oxides emission limits for natural gas or distillate oil in paragraph (a)(1) of this section or for residual oil in paragraph (a)(2) of this section, as appropriate, are applicable to the affected facility until and unless the petition is approved by the Administrator. (See 40 CFR 761.70 for regulations applicable to the incineration of materials containing polychlorinated biphenyls (PCB's).)

(h) For purposes of paragraph (i) of this section, the nitrogen oxide standards under this section apply at all times including periods of startup, shutdown, or malfunction.

(i) Except as provided under paragraph (j) of this section, compliance with the emission limits under this section is determined on a 30-day rolling average basis.

(j) Compliance with the emission limits under this section is determined on a 24-hour average basis for the initial performance test and on a 3-hour average basis for subsequent performance tests for any affected facilities that:

(1) Combust, alone or in combination, only natural gas, distillate oil, or residual oil with a nitrogen content of 0.30 weight percent or less;

(2) Have a combined annual capacity factor of 10 percent or less for natural gas, distillate oil, and residual oil with a nitrogen content of 0.30 weight percent or less; and

(3) Are subject to a Federally enforceable requirement limiting operation of the affected facility to the firing of natural gas, distillate oil, and/or residual oil with a nitrogen content of 0.30 weight percent or less and

limiting operation of the affected facility to a combined annual capacity factor of 10 percent or less for natural gas, distillate oil, and residual oil and a nitrogen content of 0.30 weight percent or less.

(k) Affected facilities that meet the criteria described in paragraphs (j) (1), (2), and (3) of this section, and that have a heat input capacity of 73 MW (250 million Btu/hour) or less, are not subject to the nitrogen oxides emission limits under this section.

(l) On and after the date on which the initial performance test is completed or is required to be completed under §60.8, whichever date comes first, no owner or operator of an affected facility which commenced construction or reconstruction after July 9, 1997 shall cause to be discharged into the atmosphere from that affected facility any gases that contain nitrogen oxides (expressed as NO2) in excess of the following limits:

(1) If the affected facility combusts coal, oil, or natural gas, or a mixture of these fuels, or with any other fuels: A limit of 86 ng/ JI (0.20 lb/million Btu) heat input unless the affected facility has an annual capacity factor for coal, oil, and natural gas of 10 percent (0.10) or less and is subject to a federally enforceable requirement that limits operation of the facility to an annual capacity factor of 10 percent (0.10) or less for coal, oil, and natural gas; or

(2) If the affected facility has a low heat release rate and combusts natural gas or distillate oil in excess of 30 percent of the heat input from the combustion of all fuels, a limit determined by use of the following formula:

$$E_n = [(0.10 * H_{go}) + (0.20 * H_r)]/ (H_{go} + H_r)$$

Where:

E_n is the NO_X emission limit, (lb/million Btu),

H_{go} is the heat input from combustion of natural gas or distillate oil, and

H_r is the heat input from combustion of any other fuel.

[52 FR 47842, Dec. 16, 1987, as amended at 54 FR 51825, Dec. 18, 1989; 63 FR 49454, Sept. 16, 1998; 66 FR 42610, Aug. 14, 2001]

§ 60.45b Compliance and performance test methods and procedures for sulfur dioxide.

(a) The sulfur dioxide emission standards under §60.42b apply at all times.

(b) In conducting the performance tests required under §60.8, the owner or operator shall use the methods and procedures in appendix A of this part or the methods and procedures as specified in this section, except as provided in §60.8(b). Section 60.8(f) does not apply to this section. The 30-day notice required in §60.8(d) applies only to the initial performance test unless otherwise specified by the Administrator

(c) The owner or operator of an affected facility shall conduct performance tests to determine compliance with the percent of potential sulfur dioxide emission rate (% P_s) and the sulfur dioxide emission rate (E_s) pursuant to §60.42b following the procedures listed below, except as provided under paragraph (d) of this section.

(1) The initial performance test shall be conducted over the first 30 consecutive operating days of the steam generating unit. Compliance with the sulfur dioxide standards shall be determined using a 30-day average. The first operating day included in the initial performance test shall be scheduled within 30 days after achieving the maximum production rate at which the affected facility will be operated, but not later than 180 days after initial startup of the facility.

(2) If only coal or only oil is combusted, the following procedures are used:

(i) The procedures in Method 19 are used to determine the hourly sulfur dioxide emission rate (E_{ho}) and the 30-day average emission rate (E_{ao}). The hourly averages used to compute the 30-day averages are obtained from the continuous emission monitoring system of §60.47b (a) or (b).

(ii) The percent of potential sulfur dioxide emission rate (% P_s) emitted to the atmosphere is computed using the following formula:

$$\%P_s = 100(1 - \%R_g/100)(1 - \%R_f/100)$$

where:

$\%R_g$ is the sulfur dioxide removal efficiency of the control device as determined by Method 19, in percent.

$\%R_f$ is the sulfur dioxide removal efficiency of fuel pretreatment as determined by Method 19, in percent.

(3) If coal or oil is combusted with other fuels, the same procedures required in paragraph (c)(2) of this section are used, except as provided in the following:

(i) An adjusted hourly sulfur dioxide emission rate ($E_{ho}°$) is used in Equation 19-19 of Method 19 to compute an adjusted 30-day average emission rate ($E_{ao}°$). The E_{ho} is computed using the following formula:

$$E_{ho}° = [E_{ho} - E_w(1 - X_k)]/X_k$$

where:

$E_{ho}°$ is the adjusted hourly sulfur dioxide emission rate, ng/J (lb/million Btu).

E_{ho} is the hourly sulfur dioxide emission rate, ng/J (lb/million Btu).

E_w is the sulfur dioxide concentration in fuels other than coal and oil combusted in the affected facility, as determined by the fuel sampling and analysis procedures in Method 19, ng/J (lb/million Btu). The value E_w for each fuel lot is used for each hourly average during the time that the lot is being combusted.

X_k is the fraction of total heat input from fuel combustion derived from coal, oil, or coal and oil, as determined by applicable procedures in Method 19.

(ii) To compute the percent of potential sulfur dioxide emission rate (%P_s), an adjusted $\%R_g$ ($\%R_g°$) is computed from the adjusted $E_{ao}°$ from paragraph (b)(3)(i) of this section and an adjusted average sulfur dioxide inlet rate ($E_{ai}°$) using the following formula:

$$\%R_g° = 100(1.0 - E_{ao}°/ E_{ai}°)$$

To compute $E_{ai}°$, an adjusted hourly sulfur dioxide inlet rate ($E_{hi}°$) is used. The $E_{hi}°$ is computed using the following formula:

$$E_{hi}° = [E_{hi} - E_w(1 - X_k)]/X_k$$

where:

$E_{hi}°$ is the adjusted hourly sulfur dioxide inlet rate, ng/J (lb/million Btu).

E_{hi} is the hourly sulfur dioxide inlet rate, ng/J (lb/million Btu).

(4) The owner or operator of an affected facility subject to paragraph (b)(3) of this section does not have to measure parameters E_w or X_k if the owner or operator elects to assume that X_k=1.0. Owners or operators of affected facilities who assume X_k=1.0 shall

(i) Determine % P_s following the procedures in paragraph (c)(2) of this section, and

(ii) Sulfur dioxide emissions (E_s) are considered to be in compliance with sulfur dioxide emission limits under §60.42b.

(5) The owner or operator of an affected facility that qualifies under the provisions of §60.42b(d) does not have to measure parameters E_w or X_k under paragraph (b)(3) of this section if the owner or operator of the affected facility elects to measure sulfur dioxide emission rates of the coal or oil following the fuel sampling and analysis procedures under Method 19.

(d) Except as provided in paragraph (j), the owner or operator of an affected facility that combusts only very low sulfur oil, has an annual capacity factor for oil of 10 percent (0.10) or less, and is subject to a Federally enforceable requirement limiting operation of the affected facility to an annual capacity factor for oil of 10 percent (0.10) or less shall:

(1) Conduct the initial performance test over 24 consecutive steam generating unit operating hours at full load;

(2) Determine compliance with the standards after the initial performance test based on the arithmetic average of the hourly emissions data during each steam generating unit operating day if a continuous emission measurement system (CEMS) is used, or based on a daily average if Method 6B or fuel sampling and analysis procedures under Method 19 are used.

(e) The owner or operator of an affected facility subject to §60.42b(d)(1) shall demonstrate the maximum design capacity of the steam generating unit by operating the facility at maximum capacity for 24 hours. This demonstration will be made during the initial performance test and a subsequent demonstration may be requested at any other

time. If the 24-hour average firing rate for the affected facility is less than the maximum design capacity provided by the manufacturer of the affected facility, the 24-hour average firing rate shall be used to determine the capacity utilization rate for the affected facility, otherwise the maximum design capacity provided by the manufacturer is used.

(f) For the initial performance test required under §60.8, compliance with the sulfur dioxide emission limits and percent reduction requirements under §60.42b is based on the average emission rates and the average percent reduction for sulfur dioxide for the first 30 consecutive steam generating unit operating days, except as provided under paragraph (d) of this section. The initial performance test is the only test for which at least 30 days prior notice is required unless otherwise specified by the Administrator. The initial performance test is to be scheduled so that the first steam generating unit operating day of the 30 successive steam generating unit operating days is completed within 30 days after achieving the maximum production rate at which the affected facility will be operated, but not later than 180 days after initial startup of the facility. The boiler load during the 30-day period does not have to be the maximum design load, but must be representative of future operating conditions and include at least one 24-hour period at full load.

(g) After the initial performance test required under §60.8, compliance with the sulfur dioxide emission limits and percent reduction requirements under §60.42b is based on the average emission rates and the average percent reduction for sulfur dioxide for 30 successive steam generating unit operating days, except as provided under paragraph (d). A separate performance test is completed at the end of each steam generating unit operating day after the initial performance test, and a new 30-day average emission rate and percent reduction for sulfur dioxide are calculated to show compliance with the standard.

(h) Except as provided under paragraph (i) of this section, the owner or operator of an affected facility shall use all valid sulfur dioxide emissions data in calculating % P_s and E_{ho} under paragraph (c), of this section whether or not the minimum emissions data requirements under §60.46b are achieved. All valid emissions data, including valid sulfur dioxides emission data collected during periods of startup, shutdown and malfunction, shall be used in calculating % P_s and E_{ho} pursuant to paragraph (c) of this section.

(i) During periods of malfunction or maintenance of the sulfur dioxide control systems when oil is combusted as provided under §60.42b(i), emission data are not used to calculate % P_s or E_s under §60.42b (a), (b) or (c), however, the emissions data are used to determine compliance with the emission limit under §60.42b(i).

(j) The owner or operator of an affected facility that combusts very low sulfur oil is not subject to the compliance and performance testing requirements of this section if the owner or operator obtains fuel receipts as described in §60.49b(r).

[52 FR 47842, Dec. 16, 1987, as amended at 54 FR 51820, 51825, Dec. 18, 1989]

§ 60.46b Compliance and performance test methods and procedures for particulate matter and nitrogen oxides.

(a) The particulate matter emission standards and opacity limits under §60.43b apply at all times except during periods of startup, shutdown, or malfunction. The nitrogen oxides emission standards under §60.44b apply at all times.

(b) Compliance with the particulate matter emission standards under §60.43b shall be determined through performance testing as described in paragraph (d) of this section.

(c) Compliance with the nitrogen oxides emission standards under §60.44b shall be determined through performance testing under paragraph (e) or (f), or under paragraphs (g) and (h) of this section, as applicable.

(d) To determine compliance with the particulate matter emission limits and opacity limits under §60.43b, the owner or operator of an affected facility shall conduct an initial performance test as required under §60.8 using the following procedures and reference methods:

(1) Method 3B is used for gas analysis when applying Method 5 or Method 17.

(2) Method 5, Method 5B, or Method 17 shall be used to measure the concentration of particulate matter as follows:

(i) Method 5 shall be used at affected facilities without wet flue gas desulfurization (FGD) systems; and

(ii) Method 17 may be used at facilities with or without wet scrubber systems provided the stack gas temperature does not exceed a temperature of 160 °C (320 °F). The procedures of sections 2.1 and 2.3 of Method 5B may be used in Method 17 only if it is used after a wet FGD system. Do not use Method 17 after wet FGD systems if the effluent is saturated or laden with water droplets.

(iii) Method 5B is to be used only after wet FGD systems.

(3) Method 1 is used to select the sampling site and the number of traverse sampling points. The sampling time for each run is at least 120 minutes and the minimum sampling volume is 1.7 dscm (60 dscf) except that smaller sampling times or volumes may be approved by the Administrator when necessitated by process variables or other factors.

(4) For Method 5, the temperature of the sample gas in the probe and filter holder is monitored and is maintained at 160 ± 14°C (320 ± 25°F).

(5) For determination of particulate matter emissions, the oxygen or carbon dioxide sample is obtained simultaneously with each run of Method 5, Method 5B or Method 17 by traversing the duct at the same sampling location.

(6) For each run using Method 5, Method 5B or Method 17, the emission rate expressed in nanograms per joule heat input is determined using:

(i) The oxygen or carbon dioxide measurements and particulate matter measurements obtained under this section,

(ii) The dry basis F factor, and

(iii) The dry basis emission rate calculation procedure contained in Method 19.

(7) Method 9 is used for determining the opacity of stack emissions.

(e) To determine compliance with the emission limits for nitrogen oxides required under §60.44b, the owner or operator of an affected facility shall conduct the performance test as required under §60.8 using the continuous system for monitoring nitrogen oxides under §60.48(b).

(1) For the initial compliance test, nitrogen oxides from the steam generating unit are monitored for 30 successive steam generating unit operating days and the 30-day average emission rate is used to determine compliance with the nitrogen oxides emission standards under §60.44b. The 30-day average emission rate is calculated as the average of all hourly emissions data recorded by the monitoring system during the 30-day test period.

(2) Following the date on which the initial performance test is completed or is required to be completed under §60.8 of this part, whichever date comes first, the owner or operator of an affected facility which combusts coal or which combusts residual oil having a nitrogen content greater than 0.30 weight percent shall determine compliance with the nitrogen oxides emission standards under §60.44b on a continuous basis through the use of a 30-day rolling average emission rate. A new 30-day rolling average emission rate is calculated each steam generating unit operating day as the average of all of the hourly nitrogen oxides emission data for the preceding 30 steam generating unit operating days.

(3) Following the date on which the initial performance test is completed or is required to be completed under §60.8 of this part, whichever date comes first, the owner or operator of an affected facility which has a heat input capacity greater than 73 MW (250 million Btu/hour) and which combusts natural gas, distillate oil, or residual oil having a nitrogen content of 0.30 weight percent or less shall determine compliance with the nitrogen oxides standards under §60.44b on a continuous basis through the use of a 30-day rolling average emission rate.

A new 30-day rolling average emission rate is calculated each steam generating unit operating day as the average of all of the hourly nitrogen oxides emission data for the preceding 30 steam generating unit operating days.

(4) Following the date on which the initial performance test is completed or required to be completed under §60.8 of this part, whichever date comes first, the owner or operator of an affected facility which has a heat input capacity of 73 MW (250 million Btu/hour) or less and which combusts natural gas, distillate oil, or residual oil having a nitrogen content of 0.30 weight percent or less shall upon request determine compliance with the nitrogen oxides standards under §60.44b through the use of a 30-day performance test. During periods when performance tests are not requested, nitrogen oxides emissions data collected pursuant to §60.48b(g)(1) or §60.48b(g)(2) are used to calculate a 30-day rolling average emission rate on a daily basis and used to prepare excess emission reports, but will not be used to determine compliance with the nitrogen oxides emission standards. A new 30-day rolling average emission rate is calculated each steam generating unit operating day as the average of all of the hourly nitrogen oxides emission data for the preceding 30 steam generating unit operating days.

(5) If the owner or operator of an affected facility which combusts residual oil does not sample and analyze the residual oil for nitrogen content, as specified in §60.49b(e), the requirements of paragraph (iii) of this section apply and the provisions of paragraph (iv) of this section are inapplicable.

(f) To determine compliance with the emissions limits for NO_X required by §60.44b(a)(4) or §60.44b(l) for duct burners used in combined cycle systems, either of the procedures described in paragraph (f)(1) or (2) of this section may be used:

(1) The owner or operator of an affected facility shall conduct the performance test required under §60.8 as follows:

(i) The emissions rate (E) of NO_X shall be computed using Equation 1 of this section:

$$E = Esg + (Hg/Hb)(Esg - Eg) \qquad \text{(Eq. 1)}$$

Where:

E = emissions rate of NOX from the duct burner, ng/J (lb/ million Btu) heat input

Esg = combined effluent emissions rate, in ng/J (lb/million Btu) heat input using appropriate F-Factor as described in Method 19

Hg = heat input rate to the combustion turbine, in Joules/hour (million Btu/hour)

Hb = heat input rate to the duct burner, in Joules/hour (million Btu/ hour)

Eg = emissions rate from the combustion turbine, in ng/J (lb/million Btu) heat input calculated using appropriate F-Factor as described in Method 19.

(ii) Method 7E of appendix A of this part shall be used to determine the NO_X concentrations. Method 3A or 3B of appendix A of this part shall be used to determine oxygen concentration.

(iii) The owner or operator shall identify and demonstrate to the Administrator's satisfaction suitable methods to determine the average hourly heat input rate to the combustion turbine and the average hourly heat input rate to the affected duct burner.

(iv) Compliance with the emissions limits under §60.44b (a)(4) or §60.44b(l) is determined by the three-run average (nominal 1-hour runs) for the initial and subsequent performance tests; or

(2) The owner or operator of an affected facility may elect to determine compliance on a 30-day rolling average basis by using the continuous emission monitoring system specified under §60.48b for measuring NO_X and oxygen and meet the requirements of §60.48b. The sampling site shall be located at the outlet from the steam generating unit. The NO_X emissions rate at the outlet from the steam generating unit shall constitute the NO_X emissions rate from the duct burner of the combined cycle system.

(g) The owner or operator of an affected facility described in §60.44b(j) or §60.44b(k) shall demonstrate the maximum heat input capacity of the steam generating unit by operating the facility at maximum capacity for 24 hours. The owner or operator of an affected facility shall determine the maximum heat input capacity using the heat loss method described in sections 5 and 7.3 of the ASME Power Test Codes 4.1 (see IBR §60.17(h)). This demonstration of maximum heat input capacity shall be made during the initial performance test for affected facilities that meet the criteria of §60.44b(j). It shall be made within 60 days after achieving the maximum production rate at which the affected facility will be operated, but not later than 180 days after initial start-up of each facility, for affected facilities meeting the criteria of §60.44b(k). Subsequent demonstrations may be required by the Administrator at any other time. If this demonstration indicates that the maximum heat input capacity of the affected facility is less than that stated by the manufacturer of the affected facility, the maximum heat input capacity determined during this demonstration shall be used to determine the capacity utilization rate for the affected facility. Otherwise, the maximum heat input capacity provided by the manufacturer is used.

(h) The owner or operator of an affected facility described in §60.44b(j) that has a heat input capacity greater than 73 MW (250 million Btu/hour) shall:

(1) Conduct an initial performance test as required under §60.8 over a minimum of 24 consecutive steam generating unit operating hours at maximum heat input capacity to demonstrate compliance with the nitrogen oxides emission standards under §60.44b using Method 7, 7A, 7E, or other approved reference methods; and

(2) Conduct subsequent performance tests once per calendar year or every 400 hours of operation (whichever comes first) to demonstrate compliance with the nitrogen oxides emission standards under §60.44b over a minimum of 3 consecutive steam generating unit operating hours at maximum heat input capacity using Method 7, 7A, 7E, or other approved reference methods.

[52 FR 47842, Dec. 16, 1987, as amended at 54 FR 51820, 51825, Dec. 18, 1989; 55 FR 18876, May 7, 1990; 65 FR 61752, Oct. 17, 2000; 66 FR 18553, Apr. 10, 2001]

§ 60.47b Emission monitoring for sulfur dioxide.

(a) Except as provided in paragraphs (b) and (f) of this section, the owner or operator of an affected facility subject to the sulfur dioxide standards under §60.42b shall install, calibrate, maintain, and operate continuous emission monitoring systems (CEMS) for measuring sulfur dioxide concentrations and either oxygen or carbon dioxide concentrations and shall record the output of the systems. The sulfur dioxide and either oxygen or carbon dioxide concentrations shall both be monitored at the inlet and outlet of the sulfur dioxide control device.

(b) As an alternative to operating CEMS as required under paragraph (a) of this section, an owner or operator may elect to determine the average sulfur dioxide emissions and percent reduction by:

(1) Collecting coal or oil samples in an as-fired condition at the inlet to the steam generating unit and analyzing them for sulfur and heat content according to Method 19. Method 19 provides procedures for converting these measurements into the format to be used in calculating the average sulfur dioxide input rate, or

(2) Measuring sulfur dioxide according to Method 6B at the inlet or outlet to the sulfur dioxide control system. An initial stratification test is required to verify the adequacy of the Method 6B sampling location. The stratification test shall consist of three paired runs of a suitable sulfur dioxide and carbon dioxide measurement train operated at the candidate location and a second similar train operated according to the procedures in section 3.2 and the applicable procedures in section 7 of Performance Specification 2. Method 6B, Method 6A, or a combination of Methods 6 and 3 or 3B or Methods 6C and 3A are suitable measurement techniques. If Method 6B is used for the second train, sampling time and timer operation may be adjusted for the stratification test as long as an adequate sample volume is collected; however, both sampling trains are to be operated similarly. For the location to be adequate for Method 6B 24-hour tests, the mean of the absolute

difference between the three paired runs must be less than 10 percent.

(3) A daily sulfur dioxide emission rate, E_D, shall be determined using the procedure described in Method 6A, section 7.6.2 (Equation 6A-8) and stated in ng/J (lb/million Btu) heat input.

(4) The mean 30-day emission rate is calculated using the daily measured values in ng/J (lb/million Btu) for 30 successive steam generating unit operating days using equation 19-20 of Method 19.

(c) The owner or operator of an affected facility shall obtain emission data for at least 75 percent of the operating hours in at least 22 out of 30 successive boiler operating days. If this minimum data requirement is not met with a single monitoring system, the owner or operator of the affected facility shall supplement the emission data with data collected with other monitoring systems as approved by the Administrator or the reference methods and procedures as described in paragraph (b) of this section.

(d) The 1-hour average sulfur dioxide emission rates measured by the CEMS required by paragraph (a) of this section and required under §60.13(h) is expressed in ng/J or lb/million Btu heat input and is used to calculate the average emission rates under §60.42b. Each 1-hour average sulfur dioxide emission rate must be based on more than 30 minutes of steam generating unit operation and include at least 2 data points with each representing a 15-minute period. Hourly sulfur dioxide emission rates are not calculated if the affected facility is operated less than 30 minutes in a 1-hour period and are not counted toward determination of a steam generating unit operating day.

(e) The procedures under §60.13 shall be followed for installation, evaluation, and operation of the CEMS.

(1) All CEMS shall be operated in accordance with the applicable procedures under Performance Specifications 1, 2, and 3 (appendix B).

(2) Quarterly accuracy determinations and daily calibration drift tests shall be performed in accordance with Procedure 1 (appendix F).

(3) For affected facilities combusting coal or oil, alone or in combination with other fuels, the span value of the sulfur dioxide CEMS at the inlet to the sulfur dioxide control device is 125 percent of the maximum estimated hourly potential sulfur dioxide emissions of the fuel combusted, and the span value of the CEMS at the outlet to the sulfur dioxide control device is 50 percent of the maximum estimated hourly potential sulfur dioxide emissions of the fuel combusted.

(f) The owner or operator of an affected facility that combusts very low sulfur oil is not subject to the emission monitoring requirements of this section if the owner or operator obtains fuel receipts as described in §60.49b(r).

[52 FR 47842, Dec. 16, 1987, as amended at 54 FR 51820, Dec. 18, 1989; 55 FR 5212, Feb. 14, 1990; 55 FR 18876, May 7, 1990]

§ 60.48b Emission monitoring for particulate matter and nitrogen oxides.

(a) The owner or operator of an affected facility subject to the opacity standard under §60.43b shall install, calibrate, maintain, and operate a continuous monitoring system for measuring the opacity of emissions discharged to the atmosphere and record the output of the system.

(b) Except as provided under paragraphs (g), (h), and (i) of this section, the owner or operator of an affected facility shall comply with either paragraphs (b)(1) or (b)(2) of this section.

(1) Install, calibrate, maintain, and operate a continuous monitoring system, and record the output of the system, for measuring nitrogen oxides emissions discharged to the atmosphere; or

(2) If the owner or operator has installed a nitrogen oxides emission rate continuous emission monitoring system (CEMS) to meet the requirements of part 75 of this chapter and is continuing to meet the ongoing requirements of part 75 of this chapter, that CEMS may be used to meet the requirements of this section, except that the owner or operator shall also meet the requirements of §60.49b. Data reported to meet the requirements of §60.49b shall not include data substituted using the missing data procedures in subpart D of part 75 of this chapter, nor shall the data have been bias adjusted according to the procedures of part 75 of this chapter.

(c) The continuous monitoring systems required under paragraph (b) of this section shall be operated and data recorded during all periods of operation of the affected facility except for continuous monitoring system breakdowns and repairs. Data is recorded during calibration checks, and zero and span adjustments.

(d) The 1-hour average nitrogen oxides emission rates measured by the continuous nitrogen oxides monitor required by paragraph (b) of this section and required under §60.13(h) shall be expressed in ng/J or lb/million Btu heat input and shall be used to calculate the average emission rates under §60.44b. The 1-hour averages shall be calculated using the data points required under §60.13(b). At least 2 data points must be used to calculate each 1-hour average.

(e) The procedures under §60.13 shall be followed for installation, evaluation, and operation of the continuous monitoring systems.

(1) For affected facilities combusting coal, wood or municipal-type solid waste, the span value for a continuous monitoring system for measuring opacity shall be between 60 and 80 percent.

(2) For affected facilities combusting coal, oil, or natural gas, the span value for nitrogen oxides is determined as follows:

Fuel	Span values for nitrogen oxides (PPM)
Natural gas.....	500
Oil.....	500
Coal.....	1,000
Mixtures.....	500(x+y) + 1,000z

where:

x is the fraction of total heat input derived from natural gas,

y is the fraction of total heat input derived from oil, and

z is the fraction of total heat input derived from coal.

(3) All span values computed under paragraph (e)(2) of this section for combusting mixtures of regulated fuels are rounded to the nearest 500 ppm.

(f) When nitrogen oxides emission data are not obtained because of continuous monitoring system breakdowns, repairs, calibration checks and zero and span adjustments, emission data will be obtained by using standby monitoring systems, Method 7, Method 7A, or other approved reference methods to provide emission data for a minimum of 75 percent of the operating hours in each steam generating unit operating day, in at least 22 out of 30 successive steam generating unit operating days.

(g) The owner or operator of an affected facility that has a heat input capacity of 73 MW (250 million Btu/hour) or less, and which has an annual capacity factor for residual oil having a nitrogen content of 0.30 weight percent or less, natural gas, distillate oil, or any mixture of these fuels, greater than 10 percent (0.10) shall:

(1) Comply with the provisions of paragraphs (b), (c), (d), (e)(2), (e)(3), and (f) of this section, or

(2) Monitor steam generating unit operating conditions and predict nitrogen oxides emission rates as specified in a plan submitted pursuant to §60.49b(c).

(h) The owner or operator of a duct burner, as described in §60.41b, which is subject to the NO_x standards of §60.44b(a)(4) or §60.44b(l) is not required to install or operate a continuous emissions monitoring system to measure NO_x emissions.

(i) The owner or operator of an affected facility described in §60.44b(j) or §60.44b(k) is not required to install or operate a continuous monitoring system for measuring nitrogen oxides emissions.

[52 FR 47842, Dec. 16, 1987, as amended at 54 FR 51825, Dec. 18, 1989; 63 FR 49455, Sept. 16, 1998; 66 FR 18553, Apr. 10, 2001]

§ 60.49b Reporting and recordkeeping requirements.

(a) The owner or operator of each affected facility shall submit notification of the date of initial startup, as provided by §60.7. This notification shall include:

(1) The design heat input capacity of the affected facility and identification of the fuels to be combusted in the affected facility,

(2) If applicable, a copy of any Federally enforceable requirement that limits the annual capacity factor for any fuel or mixture of fuels under §§ 60.42b(d)(1), 60.43b(a)(2), (a)(3)(iii), (c)(2)(ii), (d)(2)(iii), 60.44b(c), (d), (e), (i), (j), (k), 60.45b(d), (g), 60.46b(h), or 60.48b(i),

(3) The annual capacity factor at which the owner or operator anticipates operating the facility based on all fuels fired and based on each individual fuel fired, and,

(4) Notification that an emerging technology will be used for controlling emissions of sulfur dioxide. The Administrator will examine the description of the emerging technology and will determine whether the technology qualifies as an emerging technology. In making this determination, the Administrator may require the owner or operator of the affected facility to submit additional information concerning the control device. The affected facility is subject to the provisions of §60.42b(a) unless and until this determination is made by the Administrator.

(b) The owner or operator of each affected facility subject to the sulfur dioxide, particulate matter, and/or nitrogen oxides emission limits under §§ 60.42b, 60.43b, and 60.44b shall submit to the Administrator the performance test data from the initial performance test and the performance evaluation of the CEMS using the applicable performance specifications in appendix B. The owner or operator of each affected facility described in §60.44b(j) or §60.44b(k) shall submit to the Administrator the maximum heat input capacity data from the demonstration of the maximum heat input capacity of the affected facility.

(c) The owner or operator of each affected facility subject to the nitrogen oxides standard of §60.44b who seeks to demonstrate compliance with those standards through the monitoring of steam generating unit operating conditions under the provisions of §60.48b(g)(2) shall submit to the Administrator for approval a plan that identifies the operating conditions to be monitored under §60.48b(g)(2) and the records to be maintained under §60.49b(j). This plan shall be submitted to the Administrator for approval within 360 days of the initial startup of the affected facility. The plan shall:

(1) Identify the specific operating conditions to be monitored and the relationship between these operating conditions and nitrogen oxides emission rates (i.e., ng/J or lbs/million Btu heat input). Steam generating unit operating conditions include, but are not limited to, the degree of staged combustion (i.e., the ratio of primary air to secondary and/or tertiary air) and the level of excess air (i.e., flue gas oxygen level);

(2) Include the data and information that the owner or operator used to identify the relationship between nitrogen oxides emission rates and these operating conditions;

(3) Identify how these operating conditions, including steam generating unit load, will be monitored under §60.48b(g) on an hourly basis by the owner or operator during the period of operation of the affected facility; the quality assurance procedures or practices that will be employed to ensure that the data generated by monitoring these operating conditions will be representative and accurate; and the type and format of the records of these operating conditions, including steam generating unit load, that will be maintained by the owner or operator under §60.49b(j). If the plan is approved, the owner or operator shall maintain records of predicted nitrogen oxide emission rates and the monitored operating conditions, including steam generating unit load, identified in the plan.

(d) The owner or operator of an affected facility shall record and maintain records of the amounts of each fuel combusted during each day and calculate the annual capacity factor individually for coal, distillate oil, residual oil, natural gas, wood, and municipal-type solid waste for the reporting period. The annual capacity factor is determined on a 12-month rolling average basis with a new annual capacity factor calculated at the end of each calendar month.

(e) For an affected facility that combusts residual oil and meets the criteria under §§60.46b(e)(4), 60.44b (j), or (k), the owner or operator shall maintain records of the nitrogen content of the residual oil combusted in the affected facility and calculate the average fuel nitrogen content for the reporting period. The nitrogen content shall be determined using ASTM Method D3431-80, Test Method for Trace Nitrogen in Liquid Petroleum Hydrocarbons (IBR-see §60.17), or fuel suppliers. If residual oil blends are being combusted, fuel nitrogen specifications may be prorated based on the ratio of residual oils of different nitrogen content in the fuel blend.

(f) For facilities subject to the opacity standard under §60.43b, the owner or operator shall maintain records of opacity.

(g) Except as provided under paragraph (p) of this section, the owner or operator of an affected facility subject to the nitrogen oxides standards under §60.44b shall maintain records of the following information for each steam generating unit operating day:

(1) Calendar date.

(2) The average hourly nitrogen oxides emission rates (expressed as NO2) (ng/J or lb/million Btu heat input) measured or predicted.

(3) The 30-day average nitrogen oxides emission rates (ng/J or lb/ million Btu heat input) calculated at the end of each steam generating unit operating day from the measured or predicted hourly nitrogen oxide emission rates for the preceding 30 steam generating unit operating days.

(4) Identification of the steam generating unit operating days when the calculated 30-day average nitrogen oxides emission rates are in excess of the nitrogen oxides emissions standards under §60.44b, with the reasons for such excess emissions as well as a description of corrective actions taken.

(5) Identification of the steam generating unit operating days for which pollutant data have not been obtained, including reasons for not obtaining sufficient data and a description of corrective actions taken.

(6) Identification of the times when emission data have been excluded from the calculation of average emission rates and the reasons for excluding data.

(7) Identification of ``F" factor used for calculations, method of determination, and type of fuel combusted.

(8) Identification of the times when the pollutant concentration exceeded full span of the continuous monitoring system.

(9) Description of any modifications to the continuous monitoring system that could affect the ability of the continuous monitoring system to comply with Performance Specification 2 or 3.

(10) Results of daily CEMS drift tests and quarterly accuracy assessments as required under appendix F, Procedure 1.

(h) The owner or operator of any affected facility in any category listed in paragraphs (h) (1) or (2) of this section is required to submit excess emission reports for any excess emissions which occurred during the reporting period.

(1) Any affected facility subject to the opacity standards under §60.43b(e) or to the operating parameter monitoring requirements under §60.13(i)(1).

(2) Any affected facility that is subject to the nitrogen oxides standard of §60.44b, and that

(i) Combusts natural gas, distillate oil, or residual oil with a nitrogen content of 0.3 weight percent or less, or

(ii) Has a heat input capacity of 73 MW (250 million Btu/hour) or less and is required to monitor nitrogen oxides emissions on a continuous basis under §60.48b(g)(1) or steam generating unit operating conditions under §60.48b(g)(2).

(3) For the purpose of §60.43b, excess emissions are defined as all 6-minute periods during which the average opacity exceeds the opacity standards under §60.43b(f).

(4) For purposes of §60.48b(g)(1), excess emissions are defined as any calculated 30-day rolling average nitrogen oxides emission rate, as determined under §60.46b(e), which exceeds the applicable emission limits in §60.44b.

(i) The owner or operator of any affected facility subject to the continuous monitoring requirements for nitrogen oxides under §60.48(b) shall submit reports containing the information recorded under paragraph (g) of this section.

(j) The owner or operator of any affected facility subject to the sulfur dioxide standards under §60.42b shall submit reports.

(k) For each affected facility subject to the compliance and performance testing requirements of §60.45b and the reporting requirement in paragraph (j) of this section, the following information shall be reported to the Administrator:

(1) Calendar dates covered in the reporting period.

(2) Each 30-day average sulfur dioxide emission rate (ng/J or 1b/ million Btu heat input) measured during the reporting period, ending with the last 30-day period; reasons for noncompliance with the emission standards; and a description of corrective actions taken.

(3) Each 30-day average percent reduction in sulfur dioxide emissions calculated during the reporting period, ending with the last 30-day period; reasons for noncompliance with the emission standards; and a description of corrective actions taken.

(4) Identification of the steam generating unit operating days that coal or oil was combusted and for which sulfur dioxide or diluent (oxygen or carbon dioxide) data have not been obtained by an approved method for at least 75 percent of the operating hours in the steam generating unit operating day; justification for not obtaining sufficient data; and description of corrective action taken.

(5) Identification of the times when emissions data have been excluded from the calculation of average emission rates; justification for excluding data; and description of corrective action taken if data have been excluded for periods other than those during which coal or oil were not combusted in the steam generating unit.

(6) Identification of ``F" factor used for calculations, method of determination, and type of fuel combusted.

(7) Identification of times when hourly averages have been obtained based on manual sampling methods.

(8) Identification of the times when the pollutant concentration exceeded full span of the CEMS.

(9) Description of any modifications to the CEMS that could affect the ability of the CEMS to comply with Performance Specification 2 or 3.

(10) Results of daily CEMS drift tests and quarterly accuracy assessments as required under appendix F, Procedure 1.

(11) The annual capacity factor of each fired as provided under paragraph (d) of this section.

(l) For each affected facility subject to the compliance and performance testing requirements of §60.45b(d) and the reporting requirements of paragraph (j) of this section, the following information shall be reported to the Administrator:

(1) Calendar dates when the facility was in operation during the reporting period;

(2) The 24-hour average sulfur dioxide emission rate measured for each steam generating unit operating day during the reporting period that coal or oil was combusted, ending in the last 24-hour period in the quarter; reasons for noncompliance with the emission standards; and a description of corrective actions taken;

(3) Identification of the steam generating unit operating days that coal or oil was combusted for which sulfur dioxide or diluent (oxygen or carbon dioxide) data have not been obtained by an approved method for at least 75 percent of the operating hours; justification for not obtaining sufficient data; and description of corrective action taken.

(4) Identification of the times when emissions data have been excluded from the calculation of average emission rates; justification for excluding data; and description of corrective action taken if data have been excluded for periods other than those during which coal or oil were not combusted in the steam generating unit.

(5) Identification of ``F" factor used for calculations, method of determination, and type of fuel combusted.

(6) Identification of times when hourly averages have been obtained based on manual sampling methods.

(7) Identification of the times when the pollutant concentration exceeded full span of the CEMS.

(8) Description of any modifications to the CEMS which could affect the ability of the CEMS to comply with Performance Specification 2 or 3.

(9) Results of daily CEMS drift tests and quarterly accuracy assessments as required under appendix F, Procedure 1.

(m) For each affected facility subject to the sulfur dioxide standards under §60.42(b) for which the minimum amount of data required under §60.47b(f) were not obtained during the reporting period, the following information is reported to the Administrator in addition to that required under paragraph (k) of this section:

(1) The number of hourly averages available for outlet emission rates and inlet emission rates.

(2) The standard deviation of hourly averages for outlet emission rates and inlet emission rates, as determined in Method 19, section 7.

(3) The lower confidence limit for the mean outlet emission rate and the upper confidence limit for the mean inlet emission rate, as calculated in Method 19, section 7.

(4) The ratio of the lower confidence limit for the mean outlet emission rate and the allowable emission rate, as determined in Method 19, section 7.

(n) If a percent removal efficiency by fuel pretreatment (i.e., % Rf) is used to determine the overall percent reduction (i.e., % Ro) under §60.45b, the owner or operator of the affected facility shall submit a signed statement with the report.

(1) Indicating what removal efficiency by fuel pretreatment (i.e., % Rf) was credited during the reporting period;

(2) Listing the quantity, heat content, and date each pre-treated fuel shipment was received during the reporting period, the name and location of the fuel pretreatment facility; and the total quantity and total heat content of all fuels received at the affected facility during the reporting period.

(3) Documenting the transport of the fuel from the fuel pretreatment facility to the steam generating unit.

(4) Including a signed statement from the owner or operator of the fuel pretreatment facility certifying that the percent removal efficiency achieved by fuel pretreatment was determined in accordance with the provisions of Method 19 (appendix A) and listing the heat content and sulfur content of each fuel before and after fuel pretreatment.

(o) All records required under this section shall be maintained by the owner or operator of the affected facility for a period of 2 years following the date of such record.

(p) The owner or operator of an affected facility described in §60.44b(j) or (k) shall maintain records of the following information for each steam generating unit operating day:

(1) Calendar date,

(2) The number of hours of operation, and

(3) A record of the hourly steam load.

(q) The owner or operator of an affected facility described in §60.44b(j) or §60.44b(k) shall submit to the Administrator a report containing:

(1) The annual capacity factor over the previous 12 months;

(2) The average fuel nitrogen content during the reporting period, if residual oil was fired; and

(3) If the affected facility meets the criteria described in §60.44b(j), the results of any nitrogen oxides emission tests required during the reporting period, the hours of operation during the reporting period, and the hours of operation since the last nitrogen oxides emission test.

(r) The owner or operator of an affected facility who elects to demonstrate that the affected facility combusts only very low sulfur oil under §60.42b(j)(2) shall obtain and maintain at the affected facility fuel receipts from the fuel supplier which certify that the oil meets the definition of distillate oil as defined in §60.41b. For the purposes of this section, the oil need not meet the fuel nitrogen content specification in the definition of distillate oil. Reports shall be submitted to the Administrator certifying that only very low sulfur oil meeting this definition was combusted in the affected facility during the reporting period.

(s) Facility specific nitrogen oxides standard for Cytec Industries Fortier Plant's C.AOG incinerator located in Westwego, Louisiana:

(1) Definitions.

Oxidation zone is defined as the portion of the C.AOG incinerator that extends from the inlet of the oxidizing zone combustion air to the outlet gas stack.

Reducing zone is defined as the portion of the C.AOG incinerator that extends from the burner section to the inlet of the oxidizing zone combustion air.

Total inlet air is defined as the total amount of air introduced into the C.AOG incinerator for combustion of natural gas and chemical by-product waste and is equal to the sum of the air flow into the reducing zone and the air flow into the oxidation zone.

(2) Standard for nitrogen oxides.

(i) When fossil fuel alone is combusted, the nitrogen oxides emission limit for fossil fuel in §60.44b(a) applies.

(ii) When natural gas and chemical by-product waste are simultaneously combusted, the nitrogen oxides emission limit is 289 ng/J (0.67 lb/million Btu) and a maximum of 81 percent of the total inlet air provided for combustion shall be provided to the reducing zone of the C.AOG incinerator.

(3) Emission monitoring.

(i) The percent of total inlet air provided to the reducing zone shall be determined at least every 15 minutes by measuring the air flow of all the air entering the reducing zone and the air flow of all the air entering the oxidation zone, and compliance with the percentage of total inlet air that is provided to the reducing zone shall be determined on a 3-hour average basis.

(ii) The nitrogen oxides emission limit shall be determined by the compliance and performance test methods and procedures for nitrogen oxides in §60.46b(i).

(iii) The monitoring of the nitrogen oxides emission limit shall be performed in accordance with §60.48b.

(4) Reporting and recordkeeping requirements.

(i) The owner or operator of the C.AOG incinerator shall submit a report on any excursions from the limits required by paragraph (a)(2) of this section to the Administrator with the quarterly report required by paragraph (i) of this section.

(ii) The owner or operator of the C.AOG incinerator shall keep records of the monitoring required by paragraph (a)(3) of this section for a period of 2 years following the date of such record.

(iii) The owner of operator of the C.AOG incinerator shall perform all the applicable reporting and recordkeeping requirements of this section.

(t) Facility-specific nitrogen oxides standard for Rohm and Haas Kentucky Incorporated's Boiler No. 100 located in Louisville, Kentucky:

(1) Definitions.

Air ratio control damper is defined as the part of the low nitrogen oxides burner that is adjusted to control the split of total combustion air delivered to the reducing and oxidation portions of the combustion flame.

Flue gas recirculation line is defined as the part of Boiler No. 100 that recirculates a portion of the boiler flue gas back into the combustion air.

(2) Standard for nitrogen oxides.

(i) When fossil fuel alone is combusted, the nitrogen oxides emission limit for fossil fuel in §60.44b(a) applies.

(ii) When fossil fuel and chemical by-product waste are simultaneously combusted, the nitrogen oxides emission limit is 473 ng/J (1.1 lb/million Btu), and the air ratio control damper tee handle shall be at a minimum of 5 inches (12.7 centimeters) out of the boiler, and the flue gas recirculation line shall be operated at a minimum of 10 percent open as indicated by its valve opening position indicator.

(3) Emission monitoring for nitrogen oxides.

(i) The air ratio control damper tee handle setting and the flue gas recirculation line valve opening position indicator setting shall be recorded during each 8-hour operating shift.

(ii) The nitrogen oxides emission limit shall be determined by the compliance and performance test methods and procedures for nitrogen oxides in §60.46b.

(iii) The monitoring of the nitrogen oxides emission limit shall be performed in accordance with §60.48b.

(4) Reporting and recordkeeping requirements.

(i) The owner or operator of Boiler No. 100 shall submit a report on any excursions from the limits required by paragraph (b)(2) of this section to the Administrator with the quarterly report required by §60.49b(i).

(ii) The owner or operator of Boiler No. 100 shall keep records of the monitoring required by paragraph (b)(3) of this section for a period of 2 years following the date of such record.

(iii) The owner of operator of Boiler No. 100 shall perform all the applicable reporting and recordkeeping requirements of §60.49b.

(u) Site-specific standard for Merck & Co., Inc.'s Stonewall Plant in Elkton, Virginia.

(1) This paragraph applies only to the pharmaceutical manufacturing facility, commonly referred to as the Stonewall Plant, located at Route 340 South, in Elkton, Virginia (``site") and only to the natural gas-fired boilers installed as part of the powerhouse conversion required pursuant to 40 CFR 52.2454(g). The requirements of this paragraph shall apply, and the requirements of §§60.40b through 60.49b(t) shall not apply, to the natural gas-fired boilers installed pursuant to 40 CFR 52.2454(g).

(i) The site shall equip the natural gas-fired boilers with low nitrogen oxide (NOX) technology.

(ii) The site shall install, calibrate, maintain, and operate a continuous monitoring and recording system for measuring NOX emissions discharged to the atmosphere and opacity using a continuous emissions monitoring system or a predictive emissions monitoring system.

(iii) Within 180 days of the completion of the powerhouse conversion, as required by 40 CFR 52.2454, the site shall perform a stack test to quantify criteria pollutant emissions.

(2) [Reserved]

(v) The owner or operator of an affected facility may submit electronic quarterly reports for SO2 and/or NOX and/or opacity in lieu of submitting the written reports required under paragraphs (h), (i), (j), (k) or (l) of this section. The format of each quarterly electronic report shall be coordinated with the permitting authority. The electronic report(s) shall be submitted no later than 30 days after the end of the calendar quarter and shall be accompanied by a certification statement from the owner or operator, indicating whether compliance with the applicable emission standards and minimum data requirements of this subpart was achieved during the reporting period. Before submitting reports in the electronic format, the owner or operator shall coordinate with the permitting authority to obtain their agreement to submit reports in this alternative format.

(w) The reporting period for the reports required under this subpart is each 6 month period. All reports shall be submitted to the Administrator and shall be postmarked by the 30th day following the end of the reporting period.

(x) Facility-specific nitrogen oxides standard for Weyerhaeuser Company's No. 2 Power Boiler located in New Bern, North Carolina:

(1) Standard for nitrogen oxides.

(i) When fossil fuel alone is combusted, the nitrogen oxides emission limit for fossil fuel in §60.44b(a) applies.

(ii) When fossil fuel and chemical by-product waste are simultaneously combusted, the nitrogen oxides emission limit is 215 ng/J (0.5 lb/million Btu).

(2) Emission monitoring for nitrogen oxides.

(i) The nitrogen oxides emissions shall be determined by the compliance and performance test methods and procedures for nitrogen oxides in §60.46b.

(ii) The monitoring of the nitrogen oxides emissions shall be performed in accordance with §60.48b.

(3) Reporting and recordkeeping requirements.

(i) The owner or operator of the No. 2 Power Boiler shall submit a report on any excursions from the limits required by paragraph (x)(2) of this section to the Administrator with the quarterly report required by §60.49b(i).

(ii) The owner or operator of the No. 2 Power Boiler shall keep records of the monitoring required by paragraph (x)(3) of this section for a period of 2 years following the date of such record.

(iii) The owner or operator of the No. 2 Power Boiler shall perform all the applicable reporting and recordkeeping requirements of §60.49b.

[52 FR 47842, Dec. 16, 1987, as amended at 54 FR 51820, 51825, Dec. 18, 1989; 60 FR 28062, May 30, 1995; 61 FR 14031, Mar. 29, 1996; 62 FR 52641, Oct. 8, 1997; 63 FR 49455, Sept. 16, 1998; 64 FR 7464, Feb. 12, 1999; 65 FR 13243, Mar. 13, 2000; 69 FR 40773, July 7, 2004]

APPENDIX E

40 CFR 60 SUBPART Ka

Subpart Ka-Standards of Performance for Storage Vessels for Petroleum Liquids for Which Construction, Reconstruction, or Modification Commenced After May 18, 1978 and Prior to July 23, 1984

§ 60.110a Applicability and designation of affected facility.

(a) Affected facility. Except as provided in paragraph (b) of this section, the affected facility to which this subpart applies is each storage vessel with a storage capacity greater than 151,416 liters (40,000 gallons) that is used to store petroleum liquids for which construction is commenced after May 18, 1978.

(b) Each petroleum liquid storage vessel with a capacity of less than 1,589,873 liters (420,000 gallons) used for petroleum or condensate stored, processed, or treated prior to custody transfer is not an affected facility and, therefore, is exempt from the requirements of this subpart.

(c) Alternative means of compliance--(1) Option to comply with part 65. Owners or operators may choose to comply with 40 CFR part 65, subpart C, to satisfy the requirements of §§ 60.112a through 60.114a for storage vessels that are subject to this subpart that store petroleum liquids that, as stored, have a maximum true vapor pressure equal to or greater than 10.3 kPa (1.5 psia). Other provisions applying to owners or operators who choose to comply with 40 CFR part 65 are provided in 40 CFR 65.1.

(2) Part 60, subpart A. Owners or operators who choose to comply with 40 CFR part 65, subpart C, must also comply with §§ 60.1, 60.2, 60.5, 60.6, 60.7(a)(1) and (4), 60.14, 60.15, and 60.16 for those storage vessels. All sections and paragraphs of subpart A of this part that are not mentioned in this paragraph (c)(2) do not apply to owners or operators of storage vessels complying with 40 CFR part 65, subpart C, except that provisions required to be met prior to implementing 40 CFR part 65 still apply. Owners and operators who choose to comply with 40 CFR part 65, subpart C, must comply with 40 CFR part 65, subpart A.

[45 FR 23379, Apr. 4, 1980, as amended at 65 FR 78275, Dec. 14, 2000]

§ 60.111a Definitions.

In addition to the terms and their definitions listed in the Act and subpart A of this part the following definitions apply in this subpart:

(a) *Storage vessel* means each tank, reservoir, or container used for the storage of petroleum liquids, but does not include: (1) Pressure vessels which are designed to operate in excess of 204.9 kPa (15 psig) without emissions to the atmosphere except under emergency conditions.

(1) Pressure vessels which are designed to operate in excess of 204.9 kPa (15 psig) without emissions to the atmosphere except under emergency conditions.

(2) Subsurface caverns or porous rock reservoirs, or

(3) Underground tanks if the total volume of petroleum liquids added to and taken from a tank annually does not exceed twice the volume of the tank.

(b) *Petroleum liquids* means petroleum, condensate, and any finished or intermediate products manufactured in a petroleum refinery but does not mean Nos. 2 through 6 fuel oils as specified in ASTM D396-78, 89, 90, 92, 96, or 98, gas turbine fuel oils Nos. 2-GT through 4-GT as specified in ASTM D2880-78 or 96, or diesel fuel oils Nos. 2-D and 4-D as specified in ASTM D975-78, 96, or 98a. (These three methods are incorporated by reference--see § 60.17.)

(c) *Petroleum refinery* means each facility engaged in producing gasoline, kerosene, distillate fuel oils, residual fuel oils, lubricants, or other products through distillation of petroleum or through redistillation, cracking, extracting, or reforming of unfinished petroleum derivatives.

(d) *Petroleum* means the crude oil removed from the earth and the oils derived from tar sands, shale, and coal.

(e) *Condensate* means hydrocarbon liquid separated from natural gas which condenses due to changes in the temperature or pressure, or both, and remains liquid at standard conditions.

(f) *True vapor pressure* means the equilibrium partial pressure exerted by a petroleum liquid such as determined in accordance with methods described in American Petroleum Institute Bulletin 2517, Evaporation Loss from External Floating-Roof Tanks, Second Edition, February 1980 (incorporated by reference--see §60.17).

(g) *Reid vapor pressure* is the absolute vapor pressure of volatile crude oil and nonviscous petroleum liquids, except liquified petroleum gases, as determined by ASTM D323-82 or 94 (incorporated by reference--see §0.17).

(h) *Liquid-mounted seal* means a foam or liquid-filled primary seal mounted in contact with the liquid between the tank wall and the floating roof continuously around the circumference of the tank.

(i) *Metallic shoe seal* includes but is not limited to a metal sheet held vertically against the tank wall by springs or weighted levers and is connected by braces to the floating roof. A flexible coated fabric (envelope) spans the annular space between the metal sheet and the floating roof.

(j) *Vapor-mounted seal* means a foam-filled primary seal mounted continuously around the circumference of the tank so there is an annular vapor space underneath the seal. The annular vapor space is bounded by the bottom of the primary seal, the tank wall, the liquid surface, and the floating roof.

(k) *Custody transfer* means the transfer of produced petroleum and/or condensate, after processing and/or treating in the producing operations, from storage tanks or automatic transfer facilities to pipelines or any other forms of transportation.

[[45 FR 23379, Apr. 4, 1980, as amended at 48 FR 3737, Jan. 27, 1983; 52 FR 11429, Apr. 8, 1987; 65 FR 61756, Oct. 17, 2000]

§ 60.112a Standard for volatile organic compounds (VOC).

(a) The owner or operator of each storage vessel to which this subpart applies which contains a petroleum liquid which, as stored, has a true vapor pressure equal to or greater than 10.3 kPa (1.5 psia) but not greater than 76.6 kPa (11.1 psia) shall equip the storage vessel with one of the following:

(1) An external floating roof, consisting of a pontoon-type or double-deck-type cover that rests on the surface of the liquid contents and is equipped with a closure device between the tank wall and the roof edge. Except as provided in paragraph (a)(1)(ii)(D) of this section, the closure device is to consist of two seals, one above the other. The lower seal is referred to as the primary seal and the upper seal is referred to as the secondary seal. The roof is to be floating on the liquid at all times (i.e., off the roof leg supports) except during initial fill and when the tank is completely emptied and subsequently refilled. The process of emptying and refilling when the roof is resting on the leg supports shall be continuous and shall be accomplished as rapidly as possible.

(i) The primary seal is to be either a metallic shoe seal, a liquid-mounted seal, or a vapor-mounted seal. Each seal is to meet the following requirements:

(A) The accumulated area of gaps between the tank wall and the metallic shoe seal or the liquid-mounted seal shall not exceed 212 cm^2 per meter of tank diameter (10.0 in^2 per ft of tank diameter) and the width of any portion of any gap shall not exceed 3.81 cm (1½ in).

(B) The accumulated area of gaps between the tank wall and the vapor-mounted seal shall not exceed 21.2 cm^2 per meter of tank diameter (1.0 in^2 per ft of tank diameter) and the width of any portion of any gap shall not

exceed 1.27 cm (½ in).

(C) One end of the metallic shoe is to extend into the stored liquid and the other end is to extend a minimum vertical distance of 61 cm (24 in) above the stored liquid surface.

(D) There are to be no holes, tears, or other openings in the shoe, seal fabric, or seal envelope.

(ii) The secondary seal is to meet the following requirements:

(A) The secondary seal is to be installed above the primary seal so that it completely covers the space between the roof edge and the tank wall except as provided in paragraph (a)(1)(ii)(B) of this section.

(B) The accumulated area of gaps between the tank wall and the secondary seal used in combination with a metallic shoe or liquid-mounted primary seal shall not exceed 21.2 cm^2 per meter of tank diameter (1.0 in^2 per ft. of tank diameter) and the width of any portion of any gap shall not exceed 1.27 cm (½ in.). There shall be no gaps between the tank wall and the secondary seal used in combination with a vapor-mounted primary seal.

(C) There are to be no holes, tears or other openings in the seal or seal fabric.

(D) The owner or operator is exempted from the requirements for secondary seals and the secondary seal gap criteria when performing gap measurements or inspections of the primary seal.

(iii) Each opening in the roof except for automatic bleeder vents and rim space vents is to provide a projection below the liquid surface. Each opening in the roof except for automatic bleeder vents, rim space vents and leg sleeves is to be equipped with a cover, seal or lid which is to be maintained in a closed position at all times (i.e., no visible gap) except when the device is in actual use or as described in paragraph (a)(1)(iv) of this section. Automatic bleeder vents are to be closed at all times when the roof is floating, except when the roof is being floated off or is being landed on the roof leg supports. Rim vents are to be set to open when the roof is being floated off the roof legs supports or at the manufacturer's recommended setting.

(iv) Each emergency roof drain is to be provided with a slotted membrane fabric cover that covers at least 90 percent of the area of the opening.

(2) A fixed roof with an internal floating type cover equipped with a continuous closure device between the tank wall and the cover edge. The cover is to be floating at all times, (i.e., off the leg supports) except during initial fill and when the tank is completely emptied and subsequently refilled. The process of emptying and refilling when the cover is resting on the leg supports shall be continuous and shall be accomplished as rapidly as possible. Each opening in the cover except for automatic bleeder vents and the rim space vents is to provide a projection below the liquid surface. Each opening in the cover except for automatic bleeder vents, rim space vents, stub drains and leg sleeves is to be equipped with a cover, seal, or lid which is to be maintained in a closed position at all times (i.e., no visible gap) except when the device is in actual use. Automatic bleeder vents are to be closed at all times when the cover is floating except when the cover is being floated off or is being landed on the leg supports. Rim vents are to be set to open only when the cover is being floated off the leg supports or at the manufacturer's recommended setting.

(3) A vapor recovery system which collects all VOC vapors and gases discharged from the storage vessel, and a vapor return or disposal system which is designed to process such VOC vapors and gases so as to reduce their emission to the atmosphere by at least 95 percent by weight.

(4) A system equivalent to those described in paragraphs (a)(1), (a)(2), or (a)(3) of this section as provided in §60.114a.

(b) The owner or operator of each storage vessel to which this subpart applies which contains a petroleum liquid which, as stored, has a true vapor pressure greater than 76.6 kPa (11.1 psia), shall equip the storage vessel with a vapor recovery system which collects all VOC vapors and gases discharged from the storage vessel, and a vapor return or disposal system which is designed to process such VOC vapors and gases so as to reduce their emission to the atmosphere by at least 95 percent by weight.

[45 FR 23379, Apr. 4, 1980, as amended at 45 FR 83229, Dec. 18, 1980]

§ 60.113a Testing and procedures.

(a) Except as provided in §60.8(b) compliance with the standard prescribed in §60.112a shall be determined as follows or in accordance with an equivalent procedure as provided in §60.114a.

(1) The owner or operator of each storage vessel to which this subpart applies which has an external floating roof shall meet the following requirements:

(i) Determine the gap areas and maximum gap widths between the primary seal and the tank wall and between the secondary seal and the tank wall according to the following frequency:

(A) For primary seals, gap measurements shall be performed within 60 days of the initial fill with petroleum liquid and at least once every five years thereafter. All primary seal inspections or gap measurements which require the removal or dislodging of the secondary seal shall be accomplished as rapidly as possible and the secondary seal shall be replaced as soon as possible.

(B) For secondary seals, gap measurements shall be performed within 60 days of the initial fill with petroleum liquid and at least once every year thereafter.

(C) If any storage vessel is out of service for a period of one year or more, subsequent refilling with petroleum liquid shall be considered initial fill for the purposes of paragraphs (a)(1)(i)(A) and (a)(1)(i)(B) of this section.

((D) Keep records of each gap measurement at the plant for a period of at least 2 years following the date of measurement. Each record shall identify the vessel on which the measurement was performed and shall contain the date of the seal gap measurement, the raw data obtained in the measurement process required by paragraph (a)(1)(ii) of this section and the calculation required by paragraph (a)(1)(iii) of this section.

(E) If either the seal gap calculated in accord with paragraph (a)(1)(iii) of this section or the measured maximum seal gap exceeds the limitations specified by §60.112a of this subpart, a report shall be furnished to the Administrator within 60 days of the date of measurements. The report shall identify the vessel and list each reason why the vessel did not meet the specifications of §60.112a. The report shall also describe the actions necessary to bring the storage vessel into compliance with the specifications of §60.112a.

((ii) Determine gap widths in the primary and secondary seals individually by the following procedures:

(A) Measure seal gaps, if any, at one or more floating roof levels when the roof is floating off the roof leg supports.

(B) Measure seal gaps around the entire circumference of the tank in each place where a ⅛" diameter uniform probe passes freely (without forcing or binding against seal) between the seal and the tank wall and measure the circumferential distance of each such location.

(C) The total surface area of each gap described in paragraph (a)(1)(ii)(B) of this section shall be determined by using probes of various widths to accurately measure the actual distance from the tank wall to the seal and multiplying each such width by its respective circumferential distance.

(iii) Add the gap surface area of each gap location for the primary seal and the secondary seal individually. Divide the sum for each seal by the nominal diameter of the

tank and compare each ratio to the appropriate ratio in the standard in §60.112a(a)(1)(i) and §60.112a(a)(1)(ii).

(iv) Provide the Administrator 30 days prior notice of the gap measurement to afford the Administrator the opportunity to have an observer present.

(2) The owner or operator of each storage vessel to which this subpart applies which has a vapor recovery and return or disposal system shall provide the following information to the Administrator on or before the date on which construction of the storage vessel commences:

(i) Emission data, if available, for a similar vapor recovery and return or disposal system used on the same type of storage vessel, which can be used to determine the efficiency of the system. A complete description of the emission measurement method used must be included.

(ii) The manufacturer's design specifications and estimated emission reduction capability of the system.

(iii) The operation and maintenance plan for the system.

(iv) Any other information which will be useful to the Administrator in evaluating the effectiveness of the system in reducing VOC emissions.

[45 FR 23379, Apr. 4, 1980, as amended at 52 FR 11429, Apr. 8, 1987]

§ 60.114a Alternative means of emission limitation.

(a) If, in the Administrator's judgment, an alternative means of emission limitation will achieve a reduction in emissions at least equivalent to the reduction in emissions achieved by any requirement in §60.112a, the Administrator will publish in the Federal Register a notice permitting the use of the alternative means for purposes of compliance with that requirement.

(b) Any notice under paragraph (a) of this section will be published only after notice and an opportunity for a hearing.

(c) Any person seeking permission under this section shall submit to the Administrator a written application including:

(1) An actual emissions test that uses a full-sized or scale-model storage vessel that accurately collects and measures all VOC emissions from a given control device and that accurately simulates wind and accounts for other emission variables such as temperature and barometric pressure.

(2) An engineering evaluation that the Administrator determines is an accurate method of determining equivalence.

(d) The Administrator may condition the permission on requirements that may be necessary to ensure operation and maintenance to achieve the same emissions reduction as specified in §60.112a.

(e) The primary vapor-mounted seal in the ``Volume-Maximizing Seal" manufactured by R.F.I. Services Corporation is approved as equivalent to the vapor-mounted seal required by § 60.112a(a)(1)(i) and must meet the gap criteria specified in § 60.112a(a)(1)(i)(B). There shall be no gaps between the tank wall and any secondary seal used in conjunction with the primary seal in the ``Volume-Maximizing Seal".

[52 FR 11429, Apr. 8, 1987]

§ 60.115a Monitoring of operations.

(a) Except as provided in paragraph (d) of this section, the owner or operator subject to this subpart shall maintain a record of the petroleum liquid stored, the period of storage, and the maximum true vapor pressure of that liquid during the respective storage period.

(b) Available data on the typical Reid vapor pressure and the maximum expected storage temperature of the stored product may be used to determine the maximum true vapor pressure from nomographs contained in API Bulletin 2517, unless the Administrator specifically requests that the liquid be sampled, the actual storage temperature determined, and the Reid vapor pressure determined from the sample(s).

(c) The true vapor pressure of each type of crude oil with a Reid vapor pressure less than 13.8 kPa (2.0 psia) or whose physical properties preclude determination by the recommended method is to be determined from available data and recorded if the estimated true vapor pressure is greater than 6.9 kPa (1.0 psia).

(d) The following are exempt from the requirements of this section:

(1) Each owner or operator of each storage vessel storing a petroleum liquid with a Reid vapor pressure of less than 6.9 kPa (1.0 psia) provided the maximum true vapor pressure does not exceed 6.9 kPa (1.0 psia).

(2) The owner or operator of each storage vessel equipped with a vapor recovery and return or disposal system in accordance with the requirements of §60.112a(a)(3) and (b), or a closed vent system and control device meeting the specifications of 40 CFR 65.42(b)(4), (b)(5), or (c).

[45 FR 23379, Apr. 4, 1980, as amended at 65 FR 78275, Dec. 14, 2000]

APPENDIX F

40 CFR 60 SUBPART Kb

Subpart Kb-Standards of Performance for Volatile Organic Liquid Storage Vessels (Including Petroleum Liquid Storage Vessels) for Which Construction, Reconstruction, or Modification Commenced After July 23, 1984

Source: 52 FR 11429, Apr. 8, 1987, unless otherwise noted.

§ 60.110b Applicability and designation of affected facility.

(a) Except as provided in paragraph (b) of this section, that affected facility to which this subpart applies is each storage vessel with a capacity greater than or equal to 75 cubic meters (m^3) that is used to store volatile organic liquids (VOL) for which construction, reconstruction, or modification is commenced after July 23, 1984.

(b) This subpart does not apply to storage vessels with a capacity greater than or equal to 151 m^3 storing a liquid with a maximum true vapor pressure less than 3.5 kilopascals (kPa) or with a capacity greater than or equal to 75 m^3 but less than 151 m^3 storing a liquid with a maximum true vapor pressure less than 15.0 kPa.

(c) [Reserved]

(d) This subpart does not apply to the following:

(1) Vessels at coke oven by-product plants.

(2) Pressure vessels designed to operate in excess of 204.9 kPa and without emissions to the atmosphere.

(3) Vessels permanently attached to mobile vehicles such as trucks, railcars, barges, or ships.

(4) Vessels with a design capacity less than or equal to 1,589.874 m^3 used for petroleum or condensate stored, processed, or treated prior to custody transfer.

(5) Vessels located at bulk gasoline plants.

(6) Storage vessels located at gasoline service stations.

(7) Vessels used to store beverage alcohol.

(8) Vessels subject to subpart GGGG of 40 CFR part 63.

(e) Alternative means of compliance-(1) Option to comply with part 65. Owners or operators may choose to comply with 40 CFR part 65, subpart C, to satisfy the requirements of §§ 60.112b through 60.117b for storage vessels that are subject to this subpart that meet the specifications in paragraphs (e)(1)(i) and (ii) of this section. When choosing to comply with 40 CFR part 65, subpart C, the monitoring requirements of § 60.116b(c), (e), (f)(1), and (g) still apply. Other provisions applying to owners or operators who choose to comply with 40 CFR part 65 are provided in 40 CFR 65.1.

(i) A storage vessel with a design capacity greater than or equal to 151 m^3 containing a VOL that, as stored, has a maximum true vapor pressure equal to or greater than 5.2 kPa; or

(ii) A storage vessel with a design capacity greater than 75 m^3 but less than 151 m^3 containing a VOL that, as stored, has a maximum true vapor pressure equal to or greater than 27.6 kPa.

(2) Part 60, subpart A. Owners or operators who choose to comply with 40 CFR part 65, subpart C, must also comply with §§ 60.1, 60.2, 60.5, 60.6, 60.7(a)(1) and (4), 60.14, 60.15, and 60.16 for those storage vessels. All sections and paragraphs of subpart A of this part that are not mentioned in this paragraph (e)(2) do not apply to owners or operators of storage vessels complying with 40 CFR part 65, subpart C, except that provisions required to be met prior to implementing 40 CFR part 65 still apply. Owners and operators who choose to comply with 40 CFR part 65, subpart C, must comply with 40 CFR part 65, subpart A.

(3) Internal floating roof report. If an owner or operator installs an internal floating roof and, at initial startup, chooses to comply with 40 CFR part 65, subpart C, a report shall be furnished to the Administrator stating that the control equipment meets the specifications of 40 CFR 65.43. This report shall be an attachment to the notification required by 40 CFR 65.5(b).

(4) External floating roof report. If an owner or operator installs an external floating roof and, at initial startup, chooses to comply with 40 CFR part 65, subpart C, a report shall be furnished to the Administrator stating that the control equipment meets the specifications of 40 CFR 65.44. This report shall be an attachment to the notification required by 40 CFR 65.5(b).

[52 FR 11429, Apr. 8, 1987, as amended at 54 FR 32973, Aug. 11, 1989; 65 FR 78275, Dec. 14, 2000; 68 FR 59332, Oct. 15, 2003]

§ 60.111b Definitions.

Terms used in this subpart are defined in the Act, in subpart A of this part, or in this subpart as follows:

Bulk gasoline plant means any gasoline distribution facility that has a gasoline throughput less than or equal to 75,700 liters per day. Gasoline throughput shall be the maximum calculated design throughput as may be limited by compliance with an enforceable condition under Federal requirement or Federal, State or local law, and discoverable by the Administrator and any other person.

Condensate means hydrocarbon liquid separated from natural gas that condenses due to changes in the temperature or pressure, or both, and remains liquid at standard conditions.

Custody transfer means the transfer of produced petroleum and/or condensate, after processing and/or treatment in the producing operations, from storage vessels or automatic transfer facilities to pipelines or any other forms of transportation.

Fill means the introduction of VOL into a storage vessel but not necessarily to complete capacity.

Gasoline service station means any site where gasoline is dispensed to motor vehicle fuel tanks from stationary storage tanks.

Maximum true vapor pressure means the equilibrium partial pressure exerted by the volatile organic compounds (as defined in 40 CFR 51.100) in the stored VOL at the temperature equal to the highest-calendar month average of the VOL storage temperature for VOL's stored above or below the ambient temperature or at the local maximum monthly average temperature as reported by the National Weather Service for VOL's stored at the ambient temperature , as determined:

(1) In accordance with methods described in American Petroleum institute Bulletin 2517, Evaporation Loss From External Floating Roof Tanks, (incorporated by reference--see § 60.17); or

(2) As obtained from standard reference texts; or

(3) As determined by ASTM D2879-83, 96, or 97 (incorporated by reference--see § 60.17);

(4) Any other method approved by the Administrator.

Petroleum means the crude oil removed from the earth and the oils derived from tar sands, shale, and coal.

Petroleum liquids means petroleum, condensate, and any finished or intermediate products manufactured in a petroleum refinery.

Process tank means a tank that is used within a process (including a solvent or raw material recovery process) to collect material discharged from a feedstock storage vessel or equipment within the process before the material is transferred to other equipment within the process, to a product or by-product storage vessel, or to a vessel used to store recovered solvent or raw material. In many process tanks, unit operations such as reactions and blending are conducted. Other process tanks, such as surge control vessels and bottoms receivers, however, may not involve unit operations.

Reid vapor pressure means the absolute vapor pressure of volatile crude oil and volatile nonviscous petroleum liquids except liquified petroleum gases, as determined by ASTM D323-82 or 94 (incorporated by reference-see § 60.17).

Storage vessel means each tank, reservoir or container used for the storage of volatile organic liquids but does not include:

(1) Frames, housing, auxiliary supports, or other components that are nor directly involved in the containment of liquids or vapors;

(2) Subsurface caverns or porous rock reservoirs; or

(3) Process tanks.

Volatile organic liquid (VOL) means any organic liquid which can emit volatile organic compounds (as defined in 40 CFR 51.100) into the atmosphere.

Waste means any liquid resulting from industrial, commercial, mining or agricultural operations, or from community activities that is discarded or is being accumulated, stored, or physically, chemically, or biologically treated prior to being discarded or recycled.

[52 FR 11429, Apr. 8, 1987, as amended at 54 FR 32973, Aug. 11, 1989; 65 FR 61756, Oct. 17, 2000; 68 FR 59333, Oct. 15, 2003]

§ 60.112b Standard for volatile organic compounds (VOC).

(a) The owner or operator of each storage vessel either with a design capacity greater than or equal to 151 m^3 containing a VOL that, as stored, has a maximum true vapor pressure equal to or greater than 5.2 kPa but less than 76.6 kPa or with a design capacity greater than or equal to 75 m^3 but less than 151 m^3 containing a VOL that, as stored, has a maximum true vapor pressure equal to or greater than 27.6 kPa but less than 76.6 kPa, shall equip each storage vessel with one of the following:

(1) A fixed roof in combination with an internal floating roof meeting the following specifications:

(i) The internal floating roof shall rest or float on the liquid surface (but not necessarily in complete contact with it) inside a storage vessel that has a fixed roof. The internal floating roof shall be floating on the liquid surface at all times, except during initial fill and during those intervals when the storage vessel is completely emptied or subsequently emptied and refilled. When the roof is resting on the leg supports, the process of filling, emptying, or refilling shall be continuous and shall be accomplished as rapidly as possible.

(ii) Each internal floating roof shall be equipped with one of the following closure devices between the wall of the storage vessel and the edge of the internal floating roof:

(A) A foam- or liquid-filled seal mounted in contact with the liquid (liquid-mounted seal). A liquid-mounted seal means a foam- or liquid- filled seal mounted in contact with the liquid between the wall of the storage vessel and the floating roof continuously around the circumference of the tank.

(B) Two seals mounted one above the other so that each forms a continuous closure that completely covers the space between the wall of the storage vessel and the edge of the internal floating roof. The lower seal may be vapor-mounted, but both must be continuous.

(C) A mechanical shoe seal. A mechanical shoe seal is a metal sheet held vertically against the wall of the storage vessel by springs or weighted levers and is connected by braces to the floating roof. A flexible coated fabric (envelope) spans the annular space between the metal sheet and the floating roof.

(iii) Each opening in a noncontact internal floating roof except for automatic bleeder vents (vacuum breaker vents) and the rim space vents is to provide a projection below the liquid surface.

(iv) Each opening in the internal floating roof except for leg sleeves, automatic bleeder vents, rim space vents, column wells, ladder wells, sample wells, and stub drains is to be equipped with a cover or lid which is to be maintained in a closed position at all times (i.e., no visible gap) except when the device is in actual use. The cover or lid shall be equipped with a gasket. Covers on each access hatch and automatic gauge float well shall be bolted except when they are in use.

(v) Automatic bleeder vents shall be equipped with a gasket and are to be closed at all times when the roof is floating except when the roof is being floated off or is being landed on the roof leg supports.

(vi) Rim space vents shall be equipped with a gasket and are to be set to open only when the internal floating roof is not floating or at the manufacturer's recommended setting.

(vii) Each penetration of the internal floating roof for the purpose of sampling shall be a sample well. The sample well shall have a slit fabric cover that covers at least 90 percent of the opening.

(viii) Each penetration of the internal floating roof that allows for passage of a column supporting the fixed roof shall have a flexible fabric sleeve seal or a gasketed sliding cover.

(ix) Each penetration of the internal floating roof that allows for passage of a ladder shall have a gasketed sliding cover.

(2) An external floating roof. An external floating roof means a pontoon-type or double-deck type cover that rests on the liquid surface in a vessel with no fixed roof. Each external floating roof must meet the following specifications:

(i) Each external floating roof shall be equipped with a closure device between the wall of the storage vessel and the roof edge. The closure device is to consist of two seals, one above the other. The lower seal is referred to as the primary seal, and the upper seal is referred to as the secondary seal.

(A) The primary seal shall be either a mechanical shoe seal or a liquid-mounted seal. Except as provided in § 60.113b(b)(4), the seal shall completely cover the annular space between the edge of the floating roof and tank wall.

(B) The secondary seal shall completely cover the annular space between the external floating roof and the wall of the storage vessel in a continuous fashion except as allowed in § 60.113b(b)(4).

(ii) Except for automatic bleeder vents and rim space vents, each opening in a noncontact external floating roof shall provide a projection below the liquid surface. Except for automatic bleeder vents, rim space vents, roof drains, and leg sleeves, each opening in the roof is to be equipped with a gasketed cover, seal, or lid that is to be maintained in a closed position at all times (i.e., no visible gap) except when the device is in actual use. Automatic bleeder vents are to be closed at all times when the roof is floating except when the roof is being floated off or is being landed on the roof leg supports. Rim vents are to be set to open when the roof is being floated off the roof legs supports or at the manufacturer's recommended setting. Automatic bleeder vents and rim space vents are to be gasketed. Each emergency roof drain is to be provided with a slotted membrane fabric cover that covers at least 90 percent of the area of the opening.

(iii) The roof shall be floating on the liquid at all times (i.e., off the roof leg supports) except during initial fill until the roof is lifted off leg supports and when the tank is completely emptied and subsequently refilled. The process of filling, emptying, or refilling when the roof is resting on the leg supports shall be continuous and shall be accomplished as rapidly as possible.

(3) A closed vent system and control device meeting the following specifications:

(i) The closed vent system shall be designed to collect all VOC vapors and gases discharged from the storage vessel and operated with no detectable emissions as indicated by an instrument reading of less than 500 ppm above background and visual inspections, as determined in part 60, subpart VV, § 60.485(b).

(ii) The control device shall be designed and operated to reduce inlet VOC emissions by 95 percent or greater. If a flare is used as the control device, it shall meet the specifications described in the general control device requirements (§ 60.18) of the General Provisions.

(4) A system equivalent to those described in paragraphs (a)(1), (a)(2), or (a)(3) of this section as provided in § 60.114b of this subpart.

(b) The owner or operator of each storage vessel with a design capacity greater than or equal to 75 m^3 which contains a VOL that, as stored, has a maximum true vapor pressure greater than or equal to 76.6 kPa shall equip each storage vessel with one of the following:

(1) A closed vent system and control device as specified in § 60.112b(a)(3).

(2) A system equivalent to that described in paragraph (b)(1) as provided in § 60.114b of this subpart.

(c) Site-specific standard for Merck & Co., Inc.'s Stonewall Plant in Elkton, Virginia. This paragraph applies only to the pharmaceutical manufacturing facility, commonly referred to as the Stonewall Plant, located at Route 340 South, in Elkton, Virginia ("site").

(1) For any storage vessel that otherwise would be subject to the control technology

requirements of paragraphs (a) or (b) of this section, the site shall have the option of either complying directly with the requirements of this subpart, or reducing the site-wide total criteria pollutant emissions cap (total emissions cap) in accordance with the procedures set forth in a permit issued pursuant to 40 CFR 52.2454. If the site chooses the option of reducing the total emissions cap in accordance with the procedures set forth in such permit, the requirements of such permit shall apply in lieu of the otherwise applicable requirements of this subpart for such storage vessel.

(2) For any storage vessel at the site not subject to the requirements of 40 CFR 60.112b (a) or (b), the requirements of 40 CFR 60.116b (b) and (c) and the General Provisions (subpart A of this part) shall not apply.

[52 FR 11429, Apr. 8, 1987, as amended at 62 FR 52641, Oct. 8, 1997]

§ 60.113b Testing and procedures.

The owner or operator of each storage vessel as specified in § 60.112b(a) shall meet the requirements of paragraph (a), (b), or (c) of this section. The applicable paragraph for a particular storage vessel depends on the control equipment installed to meet the requirements of § 60.112b.

(a) After installing the control equipment required to meet § 60.112b(a)(1) (permanently affixed roof and internal floating roof), each owner or operator shall:

(1) Visually inspect the internal floating roof, the primary seal, and the secondary seal (if one is in service), prior to filling the storage vessel with VOL. If there are holes, tears, or other openings in the primary seal, the secondary seal, or the seal fabric or defects in the internal floating roof, or both, the owner or operator shall repair the items before filling the storage vessel.

(2) For Vessels equipped with a liquid-mounted or mechanical shoe primary seal, visually inspect the internal floating roof and the primary seal or the secondary seal (if one is in service) through manholes and roof hatches on the fixed roof at least once every 12 months after initial fill. If the internal floating roof is not resting on the surface of the VOL inside the storage vessel, or there is liquid accumulated on the roof, or the seal is detached, or there are holes or tears in the seal fabric, the owner or operator shall repair the items or empty and remove the storage vessel from service within 45 days. If a failure that is detected during inspections required in this paragraph cannot be repaired within 45 days and if the vessel cannot be emptied within 45 days, a 30-day extension may be requested from the Administrator in the inspection report required in § 60.115b(a)(3). Such a request for an extension must document that alternate storage capacity is unavailable and specify a schedule of actions the company will take that will assure that the control equipment will be repaired or the vessel will be emptied as soon as possible.

(3) For vessels equipped with a double-seal system as specified in § 60.112b(a)(1)(ii)(B):

(i) Visually inspect the vessel as specified in paragraph (a)(4) of this section at least every 5 years; or

(ii) Visually inspect the vessel as specified in paragraph (a)(2) of this section.

(4) Visually inspect the internal floating roof, the primary seal, the secondary seal (if one is in service), gaskets, slotted membranes and sleeve seals (if any) each time the storage vessel is emptied and degassed. If the internal floating roof has defects, the primary seal has holes, tears, or other openings in the seal or the seal fabric, or the secondary seal has holes, tears, or other openings in the seal or the seal fabric, or the gaskets no longer close off the liquid surfaces from the atmosphere, or the slotted membrane has more than 10 percent open area, the owner or operator shall repair the items as necessary so that none of the conditions specified in this paragraph exist before refilling the storage vessel with VOL. In no event shall inspections conducted in accordance with this provision occur at intervals greater than 10 years in the case of vessels conducting the annual visual inspection as specified in paragraphs (a)(2) and (a)(3)(ii) of this section and at intervals no greater than 5 years in the case of vessels specified in paragraph (a)(3)(i) of this section.

(5) Notify the Administrator in writing at least 30 days prior to the filling or refilling of each storage vessel for which an inspection is required by paragraphs (a)(1) and (a)(4) of this section to afford the Administrator the opportunity to have an observer present. If the inspection required by paragraph (a)(4) of this section is not planned and the owner or operator could not have known about the inspection 30 days in advance or refilling the tank, the owner or operator shall notify the Administrator at least 7 days prior to the refilling of the storage vessel. Notification shall be made by telephone immediately followed by written documentation demonstrating why the inspection was unplanned. Alternatively, this notification including the written documentation may be made in writing and sent by express mail so that it is received by the Administrator at least 7 days prior to the refilling.

(b) After installing the control equipment required to meet § 60.112b(a)(2) (external floating roof), the owner or operator shall:

(1) Determine the gap areas and maximum gap widths, between the primary seal and the wall of the storage vessel and between the secondary seal and the wall of the storage vessel according to the following frequency.

(i) Measurements of gaps between the tank wall and the primary seal (seal gaps) shall be performed during the hydrostatic testing of the vessel or within 60 days of the initial fill with VOL and at least once every 5 years thereafter.

(ii) Measurements of gaps between the tank wall and the secondary seal shall be performed within 60 days of the initial fill with VOL and at least once per year thereafter.

(iii) If any source ceases to store VOL for a period of 1 year or more, subsequent introduction of VOL into the vessel shall be considered an initial fill for the purposes of paragraphs (b)(1)(i) and (b)(1)(ii) of this section.

(2) Determine gap widths and areas in the primary and secondary seals individually by the following procedures:

(i) Measure seal gaps, if any, at one or more floating roof levels when the roof is floating off the roof leg supports.

(ii) Measure seal gaps around the entire circumference of the tank in each place where a 0.32-cm diameter uniform probe passes freely (without forcing or binding against seal) between the seal and the wall of the storage vessel and measure the circumferential distance of each such location.

(iii) The total surface area of each gap described in paragraph (b)(2)(ii) of this section shall be determined by using probes of various widths to measure accurately the actual distance from the tank wall to the seal and multiplying each such width by its respective circumferential distance.

(3) Add the gap surface area of each gap location for the primary seal and the secondary seal individually and divide the sum for each seal by the nominal diameter of the tank and compare each ratio to the respective standards in paragraph (b)(4) of this section.

(4) Make necessary repairs or empty the storage vessel within 45 days of identification in any inspection for seals not meeting the requirements listed in (b)(4) (i) and (ii) of this section:

(i) The accumulated area of gaps between the tank wall and the mechanical shoe or liquid-mounted primary seal shall not exceed 212 cm^2 per meter of tank diameter, and the width of any portion of any gap shall not exceed 3.81 cm.

(A) One end of the mechanical shoe is to extend into the stored liquid, and the other end is to extend a minimum vertical distance of 61 cm above the stored liquid surface.

(B) There are to be no holes, tears, or other openings in the shoe, seal fabric, or seal envelope.

(ii) The secondary seal is to meet the following requirements:

(A) The secondary seal is to be installed above the primary seal so that it completely covers the space between the roof edge and the tank wall except as provided in paragraph (b)(2)(iii) of this section.

(B) The accumulated area of gaps between the tank wall and the secondary seal shall not exceed 21.2 cm^2 per meter of tank diameter, and the width of any portion of any gap shall not exceed 1.27 cm.

(C) There are to be no holes, tears, or other openings in the seal or seal fabric.

(iii) If a failure that is detected during inspections required in paragraph (b)(1) of § 60.113b(b) cannot be repaired within 45 days and if the vessel cannot be emptied within 45 days, a 30-day extension may be requested from the Administrator in the inspection report required in § 60.115b(b)(4). Such extension request must include a demonstration of unavailability of alternate storage capacity and a specification of a schedule that will assure that the control equipment will be repaired or the vessel will be emptied as soon as possible.

(5) Notify the Administrator 30 days in advance of any gap measurements required by paragraph (b)(1) of this section to afford the Administrator the opportunity to have an observer present.

(6) Visually inspect the external floating roof, the primary seal, secondary seal, and fittings each time the vessel is emptied and degassed.

(i) If the external floating roof has defects, the primary seal has holes, tears, or other openings in the seal or the seal fabric, or the secondary seal has holes, tears, or other openings in the seal or the seal fabric, the owner or operator shall repair the items as necessary so that none of the conditions specified in this paragraph exist before filling or refilling the storage vessel with VOL.

(ii) For all the inspections required by paragraph (b)(6) of this section, the owner or operator shall notify the Administrator in writing at least 30 days prior to the filling or refilling of each storage vessel to afford the Administrator the opportunity to inspect the storage vessel prior to refilling. If the inspection required by paragraph (b)(6) of this section is not planned and the owner or operator could not have known about the inspection 30 days in advance of refilling the tank, the owner or operator shall notify the Administrator at least 7 days prior to the refilling of the storage vessel. Notification shall be made by telephone immediately followed by written documentation demonstrating why the inspection was unplanned. Alternatively, this notification including the written documentation may be made in writing and sent by express mail so that it is received by the Administrator at least 7 days prior to the refilling.

(c) The owner or operator of each source that is equipped with a closed vent system and control device as required in § 60.112b (a)(3) or (b)(2) (other than a flare) is exempt from § 60.8 of the General Provisions and shall meet the following requirements.

(1) Submit for approval by the Administrator as an attachment to the notification required by § 60.7(a)(1) or, if the facility is exempt from § 60.7(a)(1), as an attachment to the notification required by § 60.7(a)(2), an operating plan containing the information listed below.

(i) Documentation demonstrating that the control device will achieve the required control efficiency during maximum loading conditions. This documentation is to include a description of the gas stream which enters the control device, including flow and VOC content under varying liquid level conditions (dynamic and static) and manufacturer's design specifications for the control device. If the control device or the closed vent capture system receives vapors, gases, or liquids other than fuels from sources that are not designated sources under this subpart, the efficiency demonstration is to include consideration of all vapors, gases, and liquids received by the closed vent capture system and control device. If an enclosed combustion device with a minimum residence time of 0.75 seconds and a minimum temperature of 816 °C is used to meet the 95 percent requirement, documentation that those conditions will exist is sufficient to meet the requirements of this paragraph.

(ii) A description of the parameter or parameters to be monitored to ensure that the control device will be operated in conformance with its design and an explanation of the criteria used for selection of that parameter (or parameters).

(2) Operate the closed vent system and control device and monitor the parameters of the closed vent system and control device in accordance with the operating plan submitted to the Administrator in accordance with paragraph (c)(1) of this section, unless the plan was modified by the Administrator during the review process. In this case, the modified plan applies.

(d) The owner or operator of each source that is equipped with a closed vent system and a flare to meet the requirements in § 60.112b (a)(3) or (b)(2) shall meet the requirements as specified in the general control device requirements, § 60.18 (e) and (f).

[52 FR 11429, Apr. 8, 1987, as amended at 54 FR 32973, Aug. 11, 1989]

§ 60.114b Alternative means of emission limitation.

(a) If, in the Administrator's judgment, an alternative means of emission limitation will achieve a reduction in emissions at least equivalent to the reduction in emissions achieved by any requirement in § 60.112b, the Administrator will publish in the Federal Register a notice permitting the use of the alternative means for purposes of compliance with that requirement.

(b) Any notice under paragraph (a) of this section will be published only after notice and an opportunity for a hearing.

(c) Any person seeking permission under this section shall submit to the Administrator a written application including:

(1) An actual emissions test that uses a full-sized or scale-model storage vessel that accurately collects and measures all VOC emissions from a given control device and that accurately simulates wind and accounts for other emission variables such as temperature and barometric pressure.

(2) An engineering evaluation that the Administrator determines is an accurate method of determining equivalence.

(d) The Administrator may condition the permission on requirements that may be necessary to ensure operation and maintenance to achieve the same emissions reduction as specified in § 60.112b.

§ 60.115b Reporting and recordkeeping requirements.

The owner or operator of each storage vessel as specified in § 60.112b(a) shall keep records and furnish reports as required by paragraphs (a), (b), or (c) of this section depending upon the control equipment installed to meet the requirements of § 60.112b. The owner or operator shall keep copies of all reports and records required by this section, except for the record required by (c)(1), for at least 2 years. The record required by (c)(1) will be kept for the life of the control equipment.

(a) After installing control equipment in accordance with § 60.112b(a)(1) (fixed roof and internal floating roof), the owner or operator shall meet the following requirements.

(1) Furnish the Administrator with a report that describes the control equipment and certifies that the control equipment meets the specifications of § 60.112b(a)(1) and § 60.113b(a)(1). This report shall be an attachment to the notification required by § 60.7(a)(3).

(2) Keep a record of each inspection performed as required by § 60.113b (a)(1), (a)(2), (a)(3), and (a)(4). Each record shall identify the storage vessel on which the inspection was performed and shall contain the date the vessel was inspected and the observed condition of each component of the control equipment (seals, internal floating roof, and fittings).

(3) If any of the conditions described in § 60.113b(a)(2) are detected during the annual visual inspection required by § 60.113b(a)(2), a report shall be furnished to the Administrator within 30 days of the inspection. Each report shall identify the storage vessel, the nature of the defects, and the date the storage vessel was emptied or the nature of and date the repair was made.

(4) After each inspection required by § 60.113b(a)(3) that finds holes or tears in the seal or seal fabric, or defects in the internal floating roof, or other control equipment defects listed in § 60.113b(a)(3)(ii), a report shall be furnished to the Administrator within 30 days of the inspection. The report shall identify the storage vessel and the reason it did not meet the specifications of § 61.112b(a)(1) or § 60.113b(a)(3) and list each repair made.

(b) After installing control equipment in accordance with § 61.112b(a)(2) (external floating roof), the owner or operator shall meet the following requirements.

(1) Furnish the Administrator with a report that describes the control equipment and

certifies that the control equipment meets the specifications of § 60.112b(a)(2) and § 60.113b(b)(2), (b)(3), and (b)(4). This report shall be an attachment to the notification required by § 60.7(a)(3).

(2) Within 60 days of performing the seal gap measurements required by § 60.113b(b)(1), furnish the Administrator with a report that contains:

(i) The date of measurement.

(ii) The raw data obtained in the measurement.

(iii) The calculations described in § 60.113b (b)(2) and (b)(3).

(3) Keep a record of each gap measurement performed as required by § 60.113b(b). Each record shall identify the storage vessel in which the measurement was performed and shall contain:

(i) The date of measurement.

(ii) The raw data obtained in the measurement.

(iii) The calculations described in § 60.113b (b)(2) and (b)(3).

(4) After each seal gap measurement that detects gaps exceeding the limitations specified by § 60.113b(b)(4), submit a report to the Administrator within 30 days of the inspection. The report will identify the vessel and contain the information specified in paragraph (b)(2) of this section and the date the vessel was emptied or the repairs made and date of repair.

(c) After installing control equipment in accordance with § 60.112b (a)(3) or (b)(1) (closed vent system and control device other than a flare), the owner or operator shall keep the following records.

(1) A copy of the operating plan.

(2) A record of the measured values of the parameters monitored in accordance with § 60.113b(c)(2).

(d) After installing a closed vent system and flare to comply with § 60.112b, the owner or operator shall meet the following requirements.

(1) A report containing the measurements required by § 60.18(f) (1), (2), (3), (4), (5), and (6) shall be furnished to the Administrator as required by § 60.8 of the General Provisions. This report shall be submitted within 6 months of the initial start-up date.

(2) Records shall be kept of all periods of operation during which the flare pilot flame is absent.

(3) Semiannual reports of all periods recorded under § 60.115b(d)(2) in which the pilot flame was absent shall be furnished to the Administrator.

§ 60.116b Monitoring of operations.

(a) The owner or operator shall keep copies of all records required by this section, except for the record required by paragraph (b) of this section, for at least 2 years. The record required by paragraph (b) of this section will be kept for the life of the source.

(b) The owner or operator of each storage vessel as specified in § 60.110b(a) shall keep readily accessible records showing the dimension of the storage vessel and an analysis showing the capacity of the storage vessel.

(c) Except as provided in paragraphs (f) and (g) of this section, the owner or operator of each storage vessel either with a design capacity greater than or equal to 151 m^3 storing a liquid with a maximum true vapor pressure greater than or equal to 3.5 kPa or with a design capacity greater than or equal to 75 m^3 but less than 151 m^3 storing a liquid with a maximum true vapor pressure greater than or equal to 15.0 kPa shall maintain a record of the VOL stored, the period of storage, and the maximum true vapor pressure of that VOL during the respective storage period.

(d) Except as provided in paragraph (g) of this section, the owner or operator of each storage vessel either with a design capacity greater than or equal to 151 m^3 storing a liquid with a maximum true vapor pressure that is normally less than 5.2 kPa or with a design capacity greater than or equal to 75 m^3 but less than 151 m^3 storing a liquid with a maximum true vapor pressure that is normally less than 27.6 kPa shall notify the Administrator within 30 days when the maximum true vapor pressure of the liquid exceeds the respective maximum true vapor pressure values for each volume range.

(e) Available data on the storage temperature may be used to determine the maximum true vapor pressure as determined below.

(1) For vessels operated above or below ambient temperatures, the maximum true vapor pressure is calculated based upon the highest expected calendar-month average of the storage temperature. For vessels operated at ambient temperatures, the maximum true vapor pressure is calculated based upon the maximum local monthly average ambient temperature as reported by the National Weather Service.

(2) For crude oil or refined petroleum products the vapor pressure may be obtained by the following:

(i) Available data on the Reid vapor pressure and the maximum expected storage temperature based on the highest expected calendar- month average temperature of the stored product may be used to determine the maximum true vapor pressure from nomographs contained in API Bulletin 2517 (incorporated by reference-see § 60.17), unless the Administrator specifically requests that the liquid be sampled, the actual storage temperature determined, and the Reid vapor pressure determined from the sample(s).

(ii) The true vapor pressure of each type of crude oil with a Reid vapor pressure less than 13.8 kPa or with physical properties that preclude determination by the recommended method is to be determined from available data and recorded if the estimated maximum true vapor pressure is greater than 3.5 kPa.

(3) For other liquids, the vapor pressure:

(i) May be obtained from standard reference texts, or

(ii) Determined by ASTM D2879-83, 96, or 97 (incorporated by reference-see § 60.17); or

(iii) Measured by an appropriate method approved by the Administrator; or

(iv) Calculated by an appropriate method approved by the Administrator.

(f) The owner or operator of each vessel storing a waste mixture of indeterminate or variable composition shall be subject to the following requirements.

(1) Prior to the initial filling of the vessel, the highest maximum true vapor pressure for the range of anticipated liquid compositions to be stored will be determined using the methods described in paragraph (e) of this section.

(2) For vessels in which the vapor pressure of the anticipated liquid composition is above the cutoff for monitoring but below the cutoff for controls as defined in § 60.112b(a), an initial physical test of the vapor pressure is required; and a physical test at least once every 6 months thereafter is required as determined by the following methods:

(i) ASTM D2879-83, 96, or 97 (incorporated by reference-see § 60.17); or

(ii) ASTM D323-82 or 94 (incorporated by reference-see § 60.17); or

(iii) As measured by an appropriate method as approved by the Administrator.

(g) The owner or operator of each vessel equipped with a closed vent system and control device meeting the specification of § 60.112b or with emissions reductions equipment as specified in 40 CFR 65.42(b)(4), (b)(5), (b)(6), or (c) is exempt from the requirements of paragraphs (c) and (d) of this section.

[52 FR 11429, Apr. 8, 1987, as amended at 65 FR 61756, Oct. 17, 2000; 65 FR 78276, Dec. 14, 2000, 68 FR 59333, Oct. 15, 2003]

§ 60.117b Delegation of authority.

(a) In delegating implementation and enforcement authority to a State under section 111(c) of the Act, the authorities contained in paragraph (b) of this section shall be retained by the Administrator and not transferred to a State.

(b) Authorities which will not be delegated to States: §§ 60.111b(f)(4), 60.114b, 60.116b(e)(3)(iii), 60.116b(e)(3)(iv), and 60.116b(f)(2)(iii).

[52 FR 11429, Apr. 8, 1987, as amended at 52 FR 22780, June 16, 1987]

APPENDIX G

40 CFR 63 SUBPART CC

40 CFR citation	Requirement	Applies to subpart BB	Comment
63.13	Addresses	Yes.	
63.14	Incorporation by Reference	Yes.	
63.15	Information Availability/Confidentiality.	Yes.	

[64 FR 31382, June 10, 1999, as amended at 67 FR 65078, Dec. 17, 2001]

Subpart CC—National Emission Standards for Hazardous Air Pollutants From Petroleum Refineries

SOURCE: 60 FR 43260, Aug. 18, 1995, unless otherwise noted.

§63.640 Applicability and designation of affected source.

(a) This subpart applies to petroleum refining process units and to related emission points that are specified in paragraphs (c)(5) through (c)(7) of this section that are located at a plant site that meet the criteria in paragraphs (a)(1) and (a)(2) of this section;

(1) Are located at a plant site that is a major source as defined in section 112(a) of the Clean Air Act; and

(2) Emit or have equipment containing or contacting one or more of the hazardous air pollutants listed in table 1 of this subpart.

(b)(1) If the predominant use of the flexible operation unit, as described in paragraphs (b)(1)(i) and (ii) of this section, is as a petroleum refining process unit, as defined in §63.641, then the flexible operation unit shall be subject to the provisions of this subpart.

(i) Except as provided in paragraph (b)(1)(ii) of this section, the predominant use of the flexible operation unit shall be the use representing the greatest annual operating time.

(ii) If the flexible operation unit is used as a petroleum refining process unit and for another purpose equally based on operating time, then the predominant use of the flexible operation unit shall be the use that produces the greatest annual production on a mass basis.

(2) The determination of applicability of this subpart to petroleum refining process units that are designed and operated as flexible operation units shall be reported as specified in §63.654(h)(6)(i).

(c) For the purpose of this subpart, the affected source shall comprise all emission points, in combination, listed in paragraphs (c)(1) through (c)(7) of this section that are located at a single refinery plant site.

(1) All miscellaneous process vents from petroleum refining process units meeting the criteria in paragraph (a) of this section;

(2) All storage vessels associated with petroleum refining process units meeting the criteria in paragraph (a) of this section;

(3) All wastewater streams and treatment operations associated with petroleum refining process units meeting the criteria in paragraph (a) of this section;

(4) All equipment leaks from petroleum refining process units meeting the criteria in paragraph (a) of this section;

(5) All gasoline loading racks classified under Standard Industrial Classification code 2911 meeting the criteria in paragraph (a) of this section;

(6) All marine vessel loading operations located at a petroleum refinery meeting the criteria in paragraph (a) of this section and the applicability criteria of subpart Y, §63.560; and

(7) All storage vessels and equipment leaks associated with a bulk gasoline terminal or pipeline breakout station classified under Standard Industrial Classification code 2911 located within a contiguous area and under common control with a refinery meeting the criteria in paragraph (a) of this section.

(d) The affected source subject to this subpart does not include the emission points listed in paragraphs (d)(1) through (d)(5) of this section.

(1) Stormwater from segregated stormwater sewers;

(2) Spills;

operator may assign the distillation unit to any of the petroleum refining process units subject to this rule.

(4) If the process unit to which the distillation unit is assigned is a petroleum refining process unit subject to this subpart and the vent stream contains greater than 20 parts per million by volume total organic hazardous air pollutants, then the vent from the distillation unit is considered a miscellaneous process vent (as defined in §63.641 of this subpart) and is part of the source to which this subpart applies.

(5) If the predominant use of a distillation unit varies from year to year, then the applicability of this subpart shall be determined based on the utilization of that distillation unit during the year preceding promulgation of this subpart. This determination shall be reported as specified in §63.654(h)(6)(iii).

(g) The provisions of this subpart do not apply to the processes specified in paragraphs (g)(1) through (g)(7) of this section.

(1) Research and development facilities, regardless of whether the facilities are located at the same plant site as a petroleum refining process unit that is subject to the provisions of this subpart;

(2) Equipment that does not contain any of the hazardous air pollutants listed in table 1 of this subpart that is located within a petroleum refining process unit that is subject to this subpart;

(3) Units processing natural gas liquids;

(4) Units that are used specifically for recycling discarded oil;

(5) Shale oil extraction units;

(6) Ethylene processes; and

(7) Process units and emission points subject to subparts F, G, H, and I of this part.

(h) Except as provided in paragraphs (k), (l), or (m) of this section, sources subject to this subpart are required to achieve compliance on or before the dates specified in paragraphs (h)(1) through (h)(4) of this section.

(1) New sources that commence construction or reconstruction after July 14, 1994 shall be in compliance with this subpart upon initial startup or the date of promulgation of this subpart, whichever is later, as provided in §63.6(b) of subpart A of this part.

(2) Except as provided in paragraphs (h)(3) through (h)(5) of this section, existing sources shall be in compliance with this subpart no later than August 18, 1998, except as provided in §63.6(c) of subpart A of this part, or unless an extension has been granted by the Administrator as provided in §63.6(i) of subpart A of this part.

(3) Marine tank vessels at existing sources shall be in compliance with this subpart no later than August 18, 1999 unless the vessels are included in an emissions average to generate emission credits. Marine tank vessels used to generate credits in an emissions average shall be in compliance with this subpart no later than August 18, 1998 unless an extension has been granted by the Administrator as provided in §63.6(i).

(4) Existing Group 1 floating roof storage vessels shall be in compliance with §63.646 at the first degassing and cleaning activity after August 18, 1998, or within 10 years after promulgation of the rule, whichever is first.

(5) An owner or operator may elect to comply with the provisions of §63.648 (c) through (i) as an alternative to the provisions of §63.648 (a) and (b). In such cases, the owner or operator shall comply no later than the dates specified in paragraphs (h)(5)(i) through (h)(5)(iii) of this section.

(i) Phase I (see table 2 of this subpart), beginning on August 18, 1998;

(ii) Phase II (see table 2 of this subpart), beginning no later than August 18, 1999; and

(iii) Phase III (see table 2 of this subpart), beginning no later than February 18, 2001.

(i) If an additional petroleum refining process unit is added to a plant site that is a major source as defined in section 112(a) of the Clean Air Act, the addition shall be subject to the requirements for a new source if it meets the criteria specified in paragraphs (i)(1) through (i)(3) of this section:

(1) It is an addition that meets the definition of construction in §63.2 of subpart A of this part;

(2) Such construction commenced after July 14, 1994; and

(3) The addition has the potential to emit 10 tons per year or more of any hazardous air pollutant or 25 tons per year or more of any combination of hazardous air pollutants.

(j) If any change is made to a petroleum refining process unit subject to this subpart, the change shall be subject to the requirements for a new source if it meets the criteria specified in paragraphs (j)(1) and (j)(2) of this section:

(1) It is a change that meets the definition of reconstruction in § 63.2 of subpart A of this part; and

(2) Such reconstruction commenced after July 14, 1994.

(k) If an additional petroleum refining process unit is added to a plant site or a change is made to a petroleum refining process unit and the addition or change is determined to be subject to the new source requirements according to paragraphs (i) or (j) of this section it must comply with the requirements specified in paragraphs (k)(1) and (k)(2) of this section:

(1) The reconstructed source, addition, or change shall be in compliance with the new source requirements upon initial startup of the reconstructed source or by the date of promulgation of this subpart, whichever is later; and

(2) The owner or operator of the reconstructed source, addition, or change shall comply with the reporting and recordkeeping requirements that are applicable to new sources. The applicable reports include, but are not limited to:

(i) The application for approval of construction or reconstruction shall be submitted as soon as practical before the construction or reconstruction is planned to commence (but it need not be sooner than 90 days after the date of promulgation of this subpart);

(ii) The Notification of Compliance Status report as required by § 63.654(f) for a new source, addition, or change;

(iii) Periodic Reports and Other Reports as required by § 63.654 (g) and (h);

(iv) Reports and notifications required by § 60.487 of subpart VV of part 60 or § 63.182 of subpart H of this part. The requirements for subpart H are summarized in table 3 of this subpart;

(v) Reports required by 40 CFR 61.357 of subpart FF;

(vi) Reports and notifications required by § 63.428 (b), (c), (g)(1), and (h)(1) through (h)(3) of subpart R. These requirements are summarized in table 4 of this subpart; and

(vii) Reports and notifications required by §§ 63.565 and 63.567 of subpart Y of this part. These requirements are summarized in table 5 of this subpart.

(l) If an additional petroleum refining process unit is added to a plant site or if a miscellaneous process vent, storage vessel, gasoline loading rack, or marine tank vessel loading operation that meets the criteria in paragraphs (c)(1) through (c)(7) of this section is added to an existing petroleum refinery or if another deliberate operational process change creating an additional Group 1 emission point(s) (as defined in § 63.641) is made to an existing petroleum refining process unit, and if the addition or process change is not subject to the new source requirements as determined according to paragraphs (i) or (j) of this section, the requirements in paragraphs (l)(1) through (l)(3) of this section shall apply. Examples of process changes include, but are not limited to, changes in production capacity, or feed or raw material where the change requires construction or physical alteration of the existing equipment or catalyst type, or whenever there is replacement, removal, or addition of recovery equipment. For purposes of this paragraph and paragraph (m) of this section, process changes do not include: Process upsets, unintentional temporary process changes, and changes that are within the equipment configuration and operating conditions documented in the Notification of Compliance Status report required by § 63.654(f).

(1) The added emission point(s) and any emission point(s) within the added or changed petroleum refining process unit are subject to the requirements for an existing source.

(2) The added emission point(s) and any emission point(s) within the added or changed petroleum refining process unit shall be in compliance with this subpart by the dates specified in paragraphs (l)(2)(i) or (l)(2)(ii) of this section, as applicable.

(i) If a petroleum refining process unit is added to a plant site or an emission point(s) is added to any existing petroleum refining process unit, the added emission point(s) shall be in compliance upon initial startup of any added petroleum refining process unit or emission point(s) or by 3 years after the date of promulgation of this subpart, whichever is later.

(ii) If a deliberate operational process change to an existing petroleum refining process unit causes a Group 2 emission point to become a Group 1 emission point (as defined in §63.641), the owner or operator shall be in compliance upon initial startup or by 3 years after the date of promulgation of this subpart, whichever is later, unless the owner or operator demonstrates to the Administrator that achieving compliance will take longer than making the change. If this demonstration is made to the Administrator's satisfaction, the owner or operator shall follow the procedures in paragraphs (m)(1) through (m)(3) of this section to establish a compliance date.

(3) The owner or operator of a petroleum refining process unit or of a storage vessel, miscellaneous process vent, wastewater stream, gasoline loading rack, or marine tank vessel loading operation meeting the criteria in paragraphs (c)(1) through (c)(7) of this section that is added to a plant site and is subject to the requirements for existing sources shall comply with the reporting and recordkeeping requirements that are applicable to existing sources including, but not limited to, the reports listed in paragraphs (l)(3)(i) through (l)(3)(vii) of this section. A process change to an existing petroleum refining process unit shall be subject to the reporting requirements for existing sources including, but not limited to, the reports listed in paragraphs (l)(3)(i) through (l)(3)(vii) of this section. The applicable reports include, but are not limited to:

(i) The Notification of Compliance Status report as required by §63.654(f) for the emission points that were added or changed;

(ii) Periodic Reports and other reports as required by §63.654 (g) and (h);

(iii) Reports and notifications required by sections of subpart A of this part that are applicable to this subpart, as identified in table 6 of this subpart.

(iv) Reports and notifications required by §63.182, or 40 CFR 60.487. The requirements of subpart H of this part are summarized in table 3 of this subpart;

(v) Reports required by §61.357 of subpart FF;

(vi) Reports and notifications required by §63.428 (b), (c), (g)(1), and (h)(1) through (h)(3) of subpart R of this part. These requirements are summarized in table 4 of this subpart; and

(vii) Reports and notifications required by §63.567 of subpart Y of this part. These requirements are summarized in table 5 of this subpart.

(4) If pumps, compressors, pressure relief devices, sampling connection systems, open-ended valves or lines, valves, or instrumentation systems are added to an existing source, they are subject to the equipment leak standards for existing sources in §63.648. A notification of compliance status report shall not be required for such added equipment.

(m) If a change that does not meet the criteria in paragraph (l) of this section is made to a petroleum refining process unit subject to this subpart, and the change causes a Group 2 emission point to become a Group 1 emission point (as defined in §63.641), then the owner or operator shall comply with the requirements of this subpart for existing sources for the Group 1 emission point as expeditiously as practicable, but in no event later than 3 years after the emission point becomes Group 1.

(1) The owner or operator shall submit to the Administrator for approval a compliance schedule, along with a justification for the schedule.

(2) The compliance schedule shall be submitted within 180 days after the change is made, unless the compliance schedule has been previously submitted to the permitting authority. If it is not possible to determine until after the change is implemented whether the emission point has become Group 1, the compliance schedule shall be submitted within 180 days of the date when the affect of the change is known to the source. The compliance schedule may

be submitted in the next Periodic Report if the change is made after the date the Notification of Compliance Status report is due.

(3) The Administrator shall approve or deny the compliance schedule or request changes within 120 calendar days of receipt of the compliance schedule and justification. Approval is automatic if not received from the Administrator within 120 calendar days of receipt.

(n) Overlap of subpart CC with other regulations for storage vessels.

(1) After the compliance dates specified in paragraph (h) of this section, a Group 1 or Group 2 storage vessel that is part of an existing source and is also subject to the provisions of 40 CFR part 60, subpart Kb, is required to comply only with the requirements of 40 CFR part 60, subpart Kb, except as provided in paragraph (n)(8) of this section.

(2) After the compliance dates specified in paragraph (h) of this section a Group 1 storage vessel that is part of a new source and is subject to 40 CFR part 60, subpart Kb is required to comply only with this subpart.

(3) After the compliance dates specified in paragraph (h) of this section, a Group 2 storage vessel that is part of a new source and is subject to the control requirements in §60.112b of 40 CFR part 60, subpart Kb is required to comply only with 40 CFR part 60, subpart Kb except as provided in paragraph (n)(8) of this section.

(4) After the compliance dates specified in paragraph (h) of this section, a Group 2 storage vessel that is part of a new source and is subject to 40 CFR 60.110b, but is not required to apply controls by 40 CFR 60.110b or 60.112b is required to comply only with this subpart.

(5) After the compliance dates specified in paragraph (h) of this section a Group 1 storage vessel that is also subject to the provisions of 40 CFR part 60, subparts K or Ka is required to only comply with the provisions of this subpart.

(6) After compliance dates specified in paragraph (h) of this section, a Group 2 storage vessel that is subject to the control requirements of 40 CFR part 60, subparts K or Ka is required to comply only with the provisions of 40 CFR part 60, subparts K or Ka except as provided for in paragraph (n)(9) of this section.

(7) After the compliance dates specified in paragraph (h) of this section, a Group 2 storage vessel that is subject to 40 CFR part 60, subparts K or Ka, but not to the control requirements of 40 CFR part 60, subparts K or Ka, is required to comply only with this subpart.

(8) Storage vessels described by paragraphs (n)(1) and (n)(3) of this section are to comply with 40 CFR part 60, subpart Kb except as provided for in paragraphs (n)(8)(i) through (n)(8)(vi) of this section.

(i) Storage vessels that are to comply with §60.112b(a)(2) of subpart Kb are exempt from the secondary seal requirements of §60.112b(a)(2)(i)(B) during the gap measurements for the primary seal required by §60.113b(b) of subpart Kb.

(ii) If the owner or operator determines that it is unsafe to perform the seal gap measurements required in §60.113b(b) of subpart Kb or to inspect the vessel to determine compliance with §60.113b(a) of subpart Kb because the roof appears to be structurally unsound and poses an imminent danger to inspecting personnel, the owner or operator shall comply with the requirements in either §63.120(b)(7)(i) or §63.120(b)(7)(ii) of subpart G.

(iii) If a failure is detected during the inspections required by §60.113b(a)(2) or during the seal gap measurements required by §60.113b(b)(1), and the vessel cannot be repaired within 45 days and the vessel cannot be emptied within 45 days, the owner or operator may utilize up to two extensions of up to 30 additional calendar days each. The owner or operator is not required to provide a request for the extension to the Administrator.

(iv) If an extension is utilized in accordance with paragraph (n)(8)(iii) of this section, the owner or operator shall, in the next periodic report, identify the vessel, provide the information listed in §60.113b(a)(2) or §60.113b(b)(4)(iii), and describe the nature and date of the repair made or provide the date the storage vessel was emptied.

(v) Owners and operators of storage vessels complying with subpart Kb of

part 60 may submit the inspection reports required by §§60.115b(a)(3), (a)(4), and (b)(4) of subpart Kb as part of the periodic reports required by this subpart, rather than within the 30-day period specified in §§60.115b(a)(3), (a)(4), and (b)(4) of subpart Kb.

(vi) The reports of rim seal inspections specified in §60.115b(b)(2) are not required if none of the measured gaps or calculated gap areas exceed the limitations specified in §60.113b(b)(4). Documentation of the inspections shall be recorded as specified in §60.115b(b)(3).

(9) Storage vessels described by paragraph (n)(6) of this section that are to comply with 40 CFR part 60, subpart Ka, are to comply with only subpart Ka except as provided for in paragraphs (n)(9)(i) through (n)(9)(iv) of this section.

(i) If the owner or operator determines that it is unsafe to perform the seal gap measurements required in §60.113a(a)(1) of subpart Ka because the floating roof appears to be structurally unsound and poses an imminent danger to inspecting personnel, the owner or operator shall comply with the requirements in either §63.120(b)(7)(i) or §63.120(b)(7)(ii) of subpart G.

(ii) If a failure is detected during the seal gap measurements required by §60.113a(a)(1) of subpart Ka, and the vessel cannot be repaired within 45 days and the vessel cannot be emptied within 45 days, the owner or operator may utilize up to 2 extensions of up to 30 additional calendar days each.

(iii) If an extension is utilized in accordance with paragraph (n)(9)(ii) of this section, the owner or operator shall, in the next periodic report, identify the vessel, describe the nature and date of the repair made or provide the date the storage vessel was emptied. The owner or operator shall also provide documentation of the decision to utilize an extension including a description of the failure, documentation that alternate storage capacity is unavailable, and a schedule of actions that will ensure that the control equipment will be repaired or the vessel emptied as soon as possible.

(iv) Owners and operators of storage vessels complying with subpart Ka of part 60 may submit the inspection reports required by §60.113a(a)(1)(i)(E) of subpart Ka as part of the periodic reports required by this subpart, rather than within the 60-day period specified in §60.113a(a)(1)(i)(E) of subpart Ka.

(o) Overlap of this subpart CC with other regulations for wastewater.

(1) After the compliance dates specified in paragraph (h) of this section a Group 1 wastewater stream managed in a piece of equipment that is also subject to the provisions of 40 CFR part 60, subpart QQQ is required to comply only with this subpart.

(2) After the compliance dates specified in paragraph (h) of this section a Group 1 or Group 2 wastewater stream that is conveyed, stored, or treated in a wastewater stream management unit that also receives streams subject to the provisions of §§63.133 through 63.147 of subpart G wastewater provisions of this part shall comply as specified in paragraph (o)(2)(i) or (o)(2)(ii) of this section. Compliance with the provisions of paragraph (o)(2) of this section shall constitute compliance with the requirements of this subpart for that wastewater stream.

(i) Comply with paragraphs (o)(2)(i)(A) through (o)(2)(i)(C) of this section.

(A) The provisions in §§63.133 through 63.140 of subpart G for all equipment used in the storage and conveyance of the Group 1 or Group 2 wastewater stream.

(B) The provisions in both 40 CFR part 61, subpart FF and in §§63.138 and 63.139 of subpart G for the treatment and control of the Group 1 or Group 2 wastewater stream.

(C) The provisions in §§63.143 through 63.148 of subpart G for monitoring and inspections of equipment and for recordkeeping and reporting requirements. The owner or operator is not required to comply with the monitoring, recordkeeping, and reporting requirements associated with the treatment and control requirements in 40 CFR part 61, subpart FF, §§61.355 through 61.357.

(ii) Comply with paragraphs (o)(2)(ii)(A) and (o)(2)(ii)(B) of this section.

(A) Comply with the provisions of §§63.133 through 63.148 and §§63.151 and 63.152 of subpart G.

(B) For any Group 2 wastewater stream or organic stream whose benzene emissions are subject to control through the use of one or more treatment processes or waste management units under the provisions of 40 CFR part 61, subpart FF on or after December 31, 1992, comply with the requirements of § 63.133 through § 63.147 of subpart G for Group 1 wastewater streams.

(p) Overlap of subpart CC with other regulations for equipment leaks. After the compliance dates specified in paragraph (h) of this section equipment leaks that are also subject to the provisions of 40 CFR parts 60 and 61 are required to comply only with the provisions specified in this subpart.

(q) For overlap of subpart CC with local or State regulations, the permitting authority for the affected source may allow consolidation of the monitoring, recordkeeping, and reporting requirements under this subpart with the monitoring, recordkeeping, and reporting requirements under other applicable requirements in 40 CFR parts 60, 61, or 63, and in any 40 CFR part 52 approved State implementation plan provided the implementation plan allows for approval of alternative monitoring, reporting, or recordkeeping requirements and provided that the permit contains an equivalent degree of compliance and control.

(r) Overlap of subpart CC with other regulations for gasoline loading racks. After the compliance dates specified in paragraph (h) of this section, a Group 1 gasoline loading rack that is part of a source subject to subpart CC and also is subject to the provisions of 40 CFR part 60, subpart XX is required to comply only with this subpart.

[60 FR 43260, Aug. 18, 1995; 61 FR 7051, Feb. 23, 1996, as amended at 61 FR 29878, June 12, 1996; 63 FR 44140, Aug. 18, 1998; 66 FR 28841, May 25, 2001]

§ 63.641 Definitions.

All terms used in this subpart shall have the meaning given them in the Clean Air Act, subpart A of this part, and in this section. If the same term is defined in subpart A and in this section, it shall have the meaning given in this section for purposes of this subpart.

Affected source means the collection of emission points to which this subpart applies as determined by the criteria in § 63.640.

Aliphatic means open-chained structure consisting of paraffin, olefin and acetylene hydrocarbons and derivatives.

Annual average true vapor pressure means the equilibrium partial pressure exerted by the stored liquid at the temperature equal to the annual average of the liquid storage temperature for liquids stored above or below the ambient temperature or at the local annual average temperature reported by the National Weather Service for liquids stored at the ambient temperature, as determined:

(1) In accordance with methods specified in § 63.111 of subpart G of this part;

(2) From standard reference texts; or

(3) By any other method approved by the Administrator.

Boiler means any enclosed combustion device that extracts useful energy in the form of steam and is not an incinerator.

By compound means by individual stream components, not by carbon equivalents.

Car-seal means a seal that is placed on a device that is used to change the position of a valve (e.g., from opened to closed) in such a way that the position of the valve cannot be changed without breaking the seal.

Closed vent system means a system that is not open to the atmosphere and is configured of piping, ductwork, connections, and, if necessary, flow inducing devices that transport gas or vapor from an emission point to a control device or back into the process. If gas or vapor from regulated equipment is routed to a process (e.g., to a petroleum refinery fuel gas system), the process shall not be considered a closed vent system and is not subject to closed vent system standards.

Combustion device means an individual unit of equipment such as a flare, incinerator, process heater, or boiler used for the combustion of organic hazardous air pollutant vapors.

Connector means flanged, screwed, or other joined fittings used to connect two pipe lines or a pipe line and a piece of equipment. A common connector is a

flange. Joined fittings welded completely around the circumference of the interface are not considered connectors for the purpose of this regulation. For the purpose of reporting and recordkeeping, connector means joined fittings that are accessible.

Continuous record means documentation, either in hard copy or computer readable form, of data values measured at least once every hour and recorded at the frequency specified in §63.654(i).

Continuous recorder means a data recording device recording an instantaneous data value or an average data value at least once every hour.

Control device means any equipment used for recovering, removing, or oxidizing organic hazardous air pollutants. Such equipment includes, but is not limited to, absorbers, carbon adsorbers, condensers, incinerators, flares, boilers, and process heaters. For miscellaneous process vents (as defined in this section), recovery devices (as defined in this section) are not considered control devices.

Delayed coker vent means a vent that is typically intermittent in nature, and usually occurs only during the initiation of the depressuring cycle of the decoking operation when vapor from the coke drums cannot be sent to the fractionator column for product recovery, but instead is routed to the atmosphere through a closed blowdown system or directly to the atmosphere in an open blowdown system. The emissions from the decoking phases of delayed coker operations, which include coke drum deheading, draining, or decoking (coke cutting), are not considered to be delayed coker vents.

Distillate receiver means overhead receivers, overhead accumulators, reflux drums, and condenser(s) including ejector-condenser(s) associated with a distillation unit.

Distillation unit means a device or vessel in which one or more feed streams are separated into two or more exit streams, each exit stream having component concentrations different from those in the feed stream(s). The separation is achieved by the redistribution of the components between the liquid and the vapor phases by vaporization and condensation as they approach equilibrium within the distillation unit. Distillation unit includes the distillate receiver, reboiler, and any associated vacuum pump or steam jet.

Emission point means an individual miscellaneous process vent, storage vessel, wastewater stream, or equipment leak associated with a petroleum refining process unit; an individual storage vessel or equipment leak associated with a bulk gasoline terminal or pipeline breakout station classified under Standard Industrial Classification code 2911; a gasoline loading rack classified under Standard Industrial Classification code 2911; or a marine tank vessel loading operation located at a petroleum refinery.

Equipment leak means emissions of organic hazardous air pollutants from a pump, compressor, pressure relief device, sampling connection system, open-ended valve or line, valve, or instrumentation system "in organic hazardous air pollutant service" as defined in this section. Vents from wastewater collection and conveyance systems (including, but not limited to wastewater drains, sewer vents, and sump drains), tank mixers, and sample valves on storage tanks are not equipment leaks.

Flame zone means the portion of a combustion chamber of a boiler or process heater occupied by the flame envelope created by the primary fuel.

Flexible operation unit means a process unit that manufactures different products periodically by alternating raw materials or operating conditions. These units are also referred to as campaign plants or blocked operations.

Flow indicator means a device that indicates whether gas is flowing, or whether the valve position would allow gas to flow, in a line.

Fuel gas system means the offsite and onsite piping and control system that gathers gaseous streams generated by refinery operations, may blend them with sources of gas, if available, and transports the blended gaseous fuel at suitable pressures for use as fuel in heaters, furnaces, boilers, incinerators, gas turbines, and other combustion devices located within or outside of the refinery. The fuel is piped directly to each individual combustion device, and the system typically operates at pressures over atmospheric. The gaseous

streams can contain a mixture of methane, light hydrocarbons, hydrogen and other miscellaneous species.

Gasoline means any petroleum distillate or petroleum distillate/alcohol blend having a Reid vapor pressure of 27.6 kilopascals or greater that is used as a fuel for internal combustion engines.

Gasoline loading rack means the loading arms, pumps, meters, shutoff valves, relief valves, and other piping and valves necessary to fill gasoline cargo tanks.

Group 1 gasoline loading rack means any gasoline loading rack classified under Standard Industrial Classification code 2911 that is located within a bulk gasoline terminal that has a gasoline throughput greater than 75,700 liters per day. Gasoline throughput shall be the maximum calculated design throughput for the terminal as may be limited by compliance with enforceable conditions under Federal, State, or local law and discovered by the Administrator and any other person.

Group 1 marine tank vessel means a vessel at an existing source loaded at any land- or sea-based terminal or structure that loads liquid commodities with vapor pressures greater than or equal to 10.3 kilopascals in bulk onto marine tank vessels, that emits greater than 9.1 megagrams of any individual HAP or 22.7 megagrams of any combination of HAP annually after August 18, 1999, or a vessel at a new source loaded at any land- or sea-based terminal or structure that loads liquid commodities with vapor pressures greater than or equal to 10.3 kilopascals onto marine tank vessels.

Group 1 miscellaneous process vent means a miscellaneous process vent for which the total organic HAP concentration is greater than or equal to 20 parts per million by volume, and the total volatile organic compound emissions are greater than or equal to 33 kilograms per day for existing sources and 6.8 kilograms per day for new sources at the outlet of the final recovery device (if any) and prior to any control device and prior to discharge to the atmosphere.

Group 1 storage vessel means a storage vessel at an existing source that has a design capacity greater than or equal to 177 cubic meters and stored-liquid maximum true vapor pressure greater than or equal to 10.4 kilopascals and stored-liquid annual average true vapor pressure greater than or equal to 8.3 kilopascals and annual average HAP liquid concentration greater than 4 percent by weight total organic HAP; a storage vessel at a new source that has a design storage capacity greater than or equal to 151 cubic meters and stored-liquid maximum true vapor pressure greater than or equal to 3.4 kilopascals and annual average HAP liquid concentration greater than 2 percent by weight total organic HAP; or a storage vessel at a new source that has a design storage capacity greater than or equal to 76 cubic meters and less than 151 cubic meters and stored-liquid maximum true vapor pressure greater than or equal to 77 kilopascals and annual average HAP liquid concentration greater than 2 percent by weight total organic HAP.

Group 1 wastewater stream means a wastewater stream at a petroleum refinery with a total annual benzene loading of 10 megagrams per year or greater as calculated according to the procedures in 40 CFR 61.342 of subpart FF of part 61 that has a flow rate of 0.02 liters per minute or greater, a benzene concentration of 10 parts per million by weight or greater, and is not exempt from control requirements under the provisions of 40 CFR part 61, subpart FF.

Group 2 gasoline loading rack means a gasoline loading rack classified under Standard Industrial Classification code 2911 that does not meet the definition of a Group 1 gasoline loading rack.

Group 2 marine tank vessel means a marine tank vessel that does not meet the definition of a Group 1 marine tank vessel.

Group 2 miscellaneous process vent means a miscellaneous process vent that does not meet the definition of a Group 1 miscellaneous process vent.

Group 2 storage vessel means a storage vessel that does not meet the definition of a Group 1 storage vessel.

Group 2 wastewater stream means a wastewater stream that does not meet the definition of Group 1 wastewater stream.

Hazardous air pollutant or *HAP* means one of the chemicals listed in section 112(b) of the Clean Air Act.

Incinerator means an enclosed combustion device that is used for destroying organic compounds. Auxiliary fuel may be used to heat waste gas to combustion temperatures. Any energy recovery section present is not physically formed into one manufactured or assembled unit with the combustion section; rather, the energy recovery section is a separate section following the combustion section and the two are joined by ducts or connections carrying flue gas.

In heavy liquid service means that the piece of equipment is not in gas/vapor service or in light liquid service.

In light liquid service means that the piece of equipment contains a liquid that meets the conditions specified in §60.593(d) of part 60, subpart GGG.

In organic hazardous air pollutant service means that a piece of equipment either contains or contacts a fluid (liquid or gas) that is at least 5 percent by weight of total organic HAP's as determined according to the provisions of §63.180(d) of subpart H of this part and table 1 of this subpart. The provisions of §63.180(d) of subpart H also specify how to determine that a piece of equipment is not in organic HAP service.

Leakless valve means a valve that has no external actuating mechanism.

Maximum true vapor pressure means the equilibrium partial pressure exerted by the stored liquid at the temperature equal to the highest calendar-month average of the liquid storage temperature for liquids stored above or below the ambient temperature or at the local maximum monthly average temperature as reported by the National Weather Service for liquids stored at the ambient temperature, as determined:

(1) In accordance with methods specified in §63.111 of subpart G of this part;

(2) From standard reference texts; or

(3) By any other method approved by the Administrator.

Miscellaneous process vent means a gas stream containing greater than 20 parts per million by volume organic HAP that is continuously or periodically discharged during normal operation of a petroleum refining process unit meeting the criteria specified in §63.640(a). Miscellaneous process vents include gas streams that are discharged directly to the atmosphere, gas streams that are routed to a control device prior to discharge to the atmosphere, or gas streams that are diverted through a product recovery device prior to control or discharge to the atmosphere. Miscellaneous process vents include vent streams from: caustic wash accumulators, distillation tower condensers/accumulators, flash/knockout drums, reactor vessels, scrubber overheads, stripper overheads, vacuum (steam) ejectors, wash tower overheads, water wash accumulators, blowdown condensers/accumulators, and delayed coker vents. Miscellaneous process vents do not include:

(1) Gaseous streams routed to a fuel gas system;

(2) Relief valve discharges;

(3) Leaks from equipment regulated under §63.648;

(4) Episodic or nonroutine releases such as those associated with startup, shutdown, malfunction, maintenance, depressuring, and catalyst transfer operations;

(5) In situ sampling systems (onstream analyzers);

(6) Catalytic cracking unit catalyst regeneration vents;

(7) Catalytic reformer regeneration vents;

(8) Sulfur plant vents;

(9) Vents from control devices such as scrubbers, boilers, incinerators, and electrostatic precipitators applied to catalytic cracking unit catalyst regeneration vents, catalytic reformer regeneration vents, and sulfur plant vents;

(10) Vents from any stripping operations applied to comply with the wastewater provisions of this subpart, subpart G of this part, or 40 CFR part 61, subpart FF;

(11) Coking unit vents associated with coke drum depressuring at or below a coke drum outlet pressure of 15 pounds per square inch gauge, deheading, draining, or decoking (coke cutting) or pressure testing after decoking;

(12) Vents from storage vessels;

(13) Emissions from wastewater collection and conveyance systems including, but not limited to, wastewater drains, sewer vents, and sump drains; and

(14) Hydrogen production plant vents through which carbon dioxide is removed from process streams or through which steam condensate produced or treated within the hydrogen plant is degassed or deaerated.

Operating permit means a permit required by 40 CFR parts 70 or 71.

Organic hazardous air pollutant or *organic HAP* in this subpart, means any of the organic chemicals listed in table 1 of this subpart.

Petroleum-based solvents means mixtures of aliphatic hydrocarbons or mixtures of one and two ring aromatic hydrocarbons.

Periodically discharged means discharges that are intermittent and associated with routine operations. Discharges associated with maintenance activities or process upsets are not considered periodically discharged miscellaneous process vents and are therefore not regulated by the petroleum refinery miscellaneous process vent provisions.

Petroleum refining process unit means a process unit used in an establishment primarily engaged in petroleum refining as defined in the Standard Industrial Classification code for petroleum refining (2911), and used primarily for the following:

(1) Producing transportation fuels (such as gasoline, diesel fuels, and jet fuels), heating fuels (such as kerosene, fuel gas distillate, and fuel oils), or lubricants;

(2) Separating petroleum; or

(3) Separating, cracking, reacting, or reforming intermediate petroleum streams.

(4) Examples of such units include, but are not limited to, petroleum-based solvent units, alkylation units, catalytic hydrotreating, catalytic hydrorefining, catalytic hydrocracking, catalytic reforming, catalytic cracking, crude distillation, lube oil processing, hydrogen production, isomerization, polymerization, thermal processes, and blending, sweetening, and treating processes. Petroleum refining process units also include sulfur plants.

Plant site means all contiguous or adjoining property that is under common control including properties that are separated only by a road or other public right-of-way. Common control includes properties that are owned, leased, or operated by the same entity, parent entity, subsidiary, or any combination thereof.

Primary fuel means the fuel that provides the principal heat input (i.e., more than 50 percent) to the device. To be considered primary, the fuel must be able to sustain operation without the addition of other fuels.

Process heater means an enclosed combustion device that primarily transfers heat liberated by burning fuel directly to process streams or to heat transfer liquids other than water.

Process unit means the equipment assembled and connected by pipes or ducts to process raw and/or intermediate materials and to manufacture an intended product. A process unit includes any associated storage vessels. For the purpose of this subpart, process unit includes, but is not limited to, chemical manufacturing process units and petroleum refining process units.

Process unit shutdown means a work practice or operational procedure that stops production from a process unit or part of a process unit during which it is technically feasible to clear process material from a process unit or part of a process unit consistent with safety constraints and during which repairs can be accomplished. An unscheduled work practice or operational procedure that stops production from a process unit or part of a process unit for less than 24 hours is not considered a process unit shutdown. An unscheduled work practice or operational procedure that would stop production from a process unit or part of a process unit for a shorter period of time than would be required to clear the process unit or part of the process unit of materials and start up the unit, or would result in greater emissions than delay of repair of leaking components until the next scheduled process unit shutdown is not considered a process unit shutdown. The use of spare equipment and

technically feasible bypassing of equipment without stopping production are not considered process unit shutdowns.

Recovery device means an individual unit of equipment capable of and used for the purpose of recovering chemicals for use, reuse, or sale. Recovery devices include, but are not limited to, absorbers, carbon adsorbers, and condensers.

Reference control technology for gasoline loading racks means a vapor collection and processing system used to reduce emissions due to the loading of gasoline cargo tanks to 10 milligrams of total organic compounds per liter of gasoline loaded or less.

Reference control technology for marine vessels means a vapor collection system and a control device that reduces captured HAP emissions by 97 percent.

Reference control technology for miscellaneous process vents means a combustion device used to reduce organic HAP emissions by 98 percent, or to an outlet concentration of 20 parts per million by volume.

Reference control technology for storage vessels means either:

(1) An internal floating roof meeting the specifications of §63.119(b) of subpart G except for §63.119 (b)(5) and (b)(6);

(2) An external floating roof meeting the specifications of §63.119(c) of subpart G except for §63.119(c)(2);

(3) An external floating roof converted to an internal floating roof meeting the specifications of §63.119(d) of subpart G except for §63.119(d)(2); or

(4) A closed-vent system to a control device that reduces organic HAP emissions by 95-percent, or to an outlet concentration of 20 parts per million by volume.

(5) For purposes of emissions averaging, these four technologies are considered equivalent.

Reference control technology for wastewater means the use of:

(1) Controls specified in §§61.343 through 61.347 of subpart FF of part 61;

(2) A treatment process that achieves the emission reductions specified in table 7 of this subpart for each individual HAP present in the wastewater stream or is a steam stripper that meets the specifications in §63.138(g) of subpart G of this part; and

(3) A control device to reduce by 95 percent (or to an outlet concentration of 20 parts per million by volume for combustion devices) the organic HAP emissions in the vapor streams vented from treatment processes (including the steam stripper described in paragraph (2) of this definition) managing wastewater.

Refinery fuel gas means a gaseous mixture of methane, light hydrocarbons, hydrogen, and other miscellaneous species (nitrogen, carbon dioxide, hydrogen sulfide, etc.) that is produced in the refining of crude oil and/or petrochemical processes and that is separated for use as a fuel in boilers and process heaters throughout the refinery.

Relief valve means a valve used only to release an unplanned, nonroutine discharge. A relief valve discharge can result from an operator error, a malfunction such as a power failure or equipment failure, or other unexpected cause that requires immediate venting of gas from process equipment in order to avoid safety hazards or equipment damage.

Research and development facility means laboratory and pilot plant operations whose primary purpose is to conduct research and development into new processes and products, where the operations are under the close supervision of technically trained personnel, and is not engaged in the manufacture of products for commercial sale, except in a de minimis manner.

Shutdown means the cessation of a petroleum refining process unit or a unit operation (including, but not limited to, a distillation unit or reactor) within a petroleum refining process unit for purposes including, but not limited to, periodic maintenance, replacement of equipment, or repair.

Startup means the setting into operation of a petroleum refining process unit for purposes of production. Startup does not include operation solely for purposes of testing equipment. Startup does not include changes in product for flexible operation units.

Storage vessel means a tank or other vessel that is used to store organic liquids. Storage vessel does not include:

(1) Vessels permanently attached to motor vehicles such as trucks, railcars, barges, or ships;

(2) Pressure vessels designed to operate in excess of 204.9 kilopascals and without emissions to the atmosphere;

(3) Vessels with capacities smaller than 40 cubic meters;

(4) Bottoms receiver tanks; or

(5) Wastewater storage tanks. Wastewater storage tanks are covered under the wastewater provisions.

Temperature monitoring device means a unit of equipment used to monitor temperature and having an accuracy of ±1 percent of the temperature being monitored expressed in degrees Celsius or ±0.5 °C, whichever is greater.

Total annual benzene means the total amount of benzene in waste streams at a facility on an annual basis as determined in §61.342 of 40 CFR part 61, subpart FF.

Total organic compounds or *TOC*, as used in this subpart, means those compounds excluding methane and ethane measured according to the procedures of Method 18 of 40 CFR part 60, appendix A. Method 25A may be used alone or in combination with Method 18 to measure TOC as provided in §63.645 of this subpart.

Wastewater means water or wastewater that, during production or processing, comes into direct contact with or results from the production or use of any raw material, intermediate product, finished product, byproduct, or waste product and is discharged into any individual drain system. Examples are feed tank drawdown; water formed during a chemical reaction or used as a reactant; water used to wash impurities from organic products or reactants; water used to cool or quench organic vapor streams through direct contact; and condensed steam from jet ejector systems pulling vacuum on vessels containing organics.

[60 FR 43260, Aug. 18, 1995, as amended at 61 FR 29879, June 12, 1996; 62 FR 7938, Feb. 21, 1997; 63 FR 31361, June 9, 1998; 63 FR 44141, Aug. 18, 1998]

§ 63.642 General standards.

(a) Each owner or operator of a source subject to this subpart is required to apply for a part 70 or part 71 operating permit from the appropriate permitting authority. If the EPA has approved a State operating permit program under part 70, the permit shall be obtained from the State authority. If the State operating permit program has not been approved, the source shall apply to the EPA Regional Office pursuant to part 71.

(b) [Reserved]

(c) Table 6 of this subpart specifies the provisions of subpart A of this part that apply and those that do not apply to owners and operators of sources subject to this subpart.

(d) Initial performance tests and initial compliance determinations shall be required only as specified in this subpart.

(1) Performance tests and compliance determinations shall be conducted according to the schedule and procedures specified in this subpart.

(2) The owner or operator shall notify the Administrator of the intention to conduct a performance test at least 30 days before the performance test is scheduled.

(3) Performance tests shall be conducted according to the provisions of §63.7(e) except that performance tests shall be conducted at maximum representative operating capacity for the process. During the performance test, an owner or operator shall operate the control device at either maximum or minimum representative operating conditions for monitored control device parameters, whichever results in lower emission reduction.

(4) Data shall be reduced in accordance with the EPA-approved methods specified in the applicable section or, if other test methods are used, the data and methods shall be validated according to the protocol in Method 301 of appendix A of this part.

(e) Each owner or operator of a source subject to this subpart shall keep copies of all applicable reports and records required by this subpart for at least 5 years except as otherwise specified in this subpart. All applicable records shall be maintained in such a manner that they can be readily accessed within 24 hours. Records may be maintained in hard copy or computer-readable form including, but not

limited to, on paper, microfilm, computer, floppy disk, magnetic tape, or microfiche.

(f) All reports required under this subpart shall be sent to the Administrator at the addresses listed in §63.13 of subpart A of this part. If acceptable to both the Administrator and the owner or operator of a source, reports may be submitted on electronic media.

(g) The owner or operator of an existing source subject to the requirements of this subpart shall control emissions of organic HAP's to the level represented by the following equation:

$$E_A = 0.02\Sigma\ EPV_1 + \Sigma\ EPV_2 + 0.05\Sigma\ ES_1 + \Sigma\ ES_2 + \Sigma\ EGLR_{1C} + \Sigma\ EGLR_2 + (R)\ \Sigma\ EMV_1 + \Sigma\ EMV_2 + \Sigma\ EWW_{1C} + \Sigma\ EWW_2$$

where:

E_A = Emission rate, megagrams per year, allowed for the source.

$0.02\Sigma\ EPV_1$ = Sum of the residual emissions, megagrams per year, from all Group 1 miscellaneous process vents, as defined in §63.641.

$\Sigma\ EPV_2$ = Sum of the emissions, megagrams per year, from all Group 2 process vents, as defined in §63.641.

$0.05\Sigma\ ES_1$ = Sum of the residual emissions, megagrams per year, from all Group 1 storage vessels, as defined in §63.641.

$\Sigma\ ES_2$ = Sum of the emissions, megagrams per year, from all Group 2 storage vessels, as defined in §63.641.

$\Sigma\ EGLR_{1C}$ = Sum of the residual emissions, megagrams per year, from all Group 1 gasoline loading racks, as defined in §63.641.

$\Sigma\ EGLR_2$ = Sum of the emissions, megagrams per year, from all Group 2 gasoline loading racks, as defined in §63.641.

$(R)\Sigma\ EMV_1$ = Sum of the residual emissions megagrams per year, from all Group 1 marine tank vessels, as defined in §63.641.

R = 0.03 for existing sources, 0.02 for new sources.

$\Sigma\ EMV_2$ = Sum of the emissions, megagrams per year from all Group 2 marine tank vessels, as defined in §63.641.

$\Sigma\ EWW_{1C}$ = Sum of the residual emissions from all Group 1 wastewater streams, as defined in §63.641. This term is calculated for each Group 1 stream according to the equation for EWW_{1c} in §63.652(h)(6).

$\Sigma\ EWW_2$ = Sum of emissions from all Group 2 wastewater streams, as defined in §63.641.

The emissions level represented by this equation is dependent on the collection of emission points in the source. The level is not fixed and can change as the emissions from each emission point change or as the number of emission points in the source changes.

(h) The owner or operator of a new source subject to the requirements of this subpart shall control emissions of organic HAP's to the level represented by the equation in paragraph (g) of this section.

(i) The owner or operator of an existing source shall demonstrate compliance with the emission standard in paragraph (g) of this section by following the procedures specified in paragraph (k) of this section for all emission points, or by following the emissions averaging compliance approach specified in paragraph (l) of this section for specified emission points and the procedures specified in paragraph (k) of this section for all other emission points within the source.

(j) The owner or operator of a new source shall demonstrate compliance with the emission standard in paragraph (h) of this section only by following the procedures in paragraph (k) of this section. The owner or operator of a new source may not use the emissions averaging compliance approach.

(k) The owner or operator of an existing source may comply, and the owner or operator of a new source shall comply, with the miscellaneous process vent provisions in §§63.643 through 63.645, the storage vessel provisions in §63.646, the wastewater provisions in §63.647, the gasoline loading rack provisions in §63.650, and the marine tank vessel loading operation provisions in §63.651 of this subpart.

(1) The owner or operator using this compliance approach shall also comply with the requirements of §63.654 as applicable.

(2) The owner or operator using this compliance approach is not required to calculate the annual emission rate specified in paragraph (g) of this section.

(l) The owner or operator of an existing source may elect to control some of the emission points within the source to different levels than specified under §§63.643 through 63.647, §§63.650 and 63.651 by using an emissions averaging compliance approach as long as the overall emissions for the source do not exceed the emission level specified in paragraph (g) of this section. The owner or operator using emissions averaging shall meet the requirements

in paragraphs (l)(1) and (l)(2) of this section.

(1) Calculate emission debits and credits for those emission points involved in the emissions average according to the procedures specified in § 63.652; and

(2) Comply with the requirements of §§ 63.652, 63.653, and 63.654, as applicable.

(m) A State may restrict the owner or operator of an existing source to using only the procedures in paragraph (k) of this section to comply with the emission standard in paragraph (g) of this section. Such a restriction would preclude the source from using an emissions averaging compliance approach.

[60 FR 43260, Aug. 18, 1995; 61 FR 7051, Feb. 23, 1996, as amended at 61 FR 29879, June 12, 1996]

§ 63.643 Miscellaneous process vent provisions.

(a) The owner or operator of a Group 1 miscellaneous process vent as defined in § 63.641 shall comply with the requirements of either paragraphs (a)(1) or (a)(2) of this section.

(1) Reduce emissions of organic HAP's using a flare that meets the requirements of § 63.11(b) of subpart A of this part.

(2) Reduce emissions of organic HAP's, using a control device, by 98 weight-percent or to a concentration of 20 parts per million by volume, on a dry basis, corrected to 3 percent oxygen, whichever is less stringent. Compliance can be determined by measuring either organic HAP's or TOC's using the procedures in § 63.645.

(b) If a boiler or process heater is used to comply with the percentage of reduction requirement or concentration limit specified in paragraph (a)(2) of this section, then the vent stream shall be introduced into the flame zone of such a device, or in a location such that the required percent reduction or concentration is achieved. Testing and monitoring is required only as specified in § 63.644(a) and § 63.645 of this subpart.

§ 63.644 Monitoring provisions for miscellaneous process vents.

(a) Except as provided in paragraph (b) of this section, each owner or operator of a Group 1 miscellaneous process vent that uses a combustion device to comply with the requirements in § 63.643(a) shall install the monitoring equipment specified in paragraph (a)(1), (a)(2), (a)(3), or (a)(4) of this section, depending on the type of combustion device used. All monitoring equipment shall be installed, calibrated, maintained, and operated according to manufacturer's specifications or other written procedures that provide adequate assurance that the equipment will monitor accurately.

(1) Where an incinerator is used, a temperature monitoring device equipped with a continuous recorder is required.

(i) Where an incinerator other than a catalytic incinerator is used, a temperature monitoring device shall be installed in the firebox or in the ductwork immediately downstream of the firebox in a position before any substantial heat exchange occurs.

(ii) Where a catalytic incinerator is used, temperature monitoring devices shall be installed in the gas stream immediately before and after the catalyst bed.

(2) Where a flare is used, a device (including but not limited to a thermocouple, an ultraviolet beam sensor, or an infrared sensor) capable of continuously detecting the presence of a pilot flame is required.

(3) Any boiler or process heater with a design heat input capacity greater than or equal to 44 megawatt or any boiler or process heater in which all vent streams are introduced into the flame zone is exempt from monitoring.

(4) Any boiler or process heater less than 44 megawatts design heat capacity where the vent stream is not introduced into the flame zone is required to use a temperature monitoring device in the firebox equipped with a continuous recorder.

(b) An owner or operator of a Group 1 miscellaneous process vent may request approval to monitor parameters other than those listed in paragraph (a) of this section. The request shall be submitted according to the procedures specified in § 63.654(h). Approval shall be requested if the owner or operator:

(1) Uses a control device other than an incinerator, boiler, process heater, or flare; or

(2) Uses one of the control devices listed in paragraph (a) of this section, but seeks to monitor a parameter other than those specified in paragraph (a) of this section.

(c) The owner or operator of a Group 1 miscellaneous process vent using a vent system that contains bypass lines that could divert a vent stream away from the control device used to comply with paragraph (a) of this section shall comply with either paragraph (c)(1) or (c)(2) of this section. Equipment such as low leg drains, high point bleeds, analyzer vents, open-ended valves or lines, pressure relief valves needed for safety reasons, and equipment subject to §63.648 are not subject to this paragraph.

(1) Install, calibrate, maintain, and operate a flow indicator that determines whether a vent stream flow is present at least once every hour. Records shall be generated as specified in §63.654(h) and (i). The flow indicator shall be installed at the entrance to any bypass line that could divert the vent stream away from the control device to the atmosphere; or

(2) Secure the bypass line valve in the closed position with a car-seal or a lock-and-key type configuration. A visual inspection of the seal or closure mechanism shall be performed at least once every month to ensure that the valve is maintained in the closed position and the vent stream is not diverted through the bypass line.

(d) The owner or operator shall establish a range that ensures compliance with the emissions standard for each parameter monitored under paragraphs (a) and (b) of this section. In order to establish the range, the information required in §63.654(f)(3) shall be submitted in the Notification of Compliance Status report.

(e) Each owner or operator of a control device subject to the monitoring provisions of this section shall operate the control device in a manner consistent with the minimum and/or maximum operating parameter value or procedure required to be monitored under paragraphs (a) and (b) of this section. Operation of the control device in a manner that constitutes a period of excess emissions, as defined in §63.654(g)(6), or failure to perform procedures required by this section shall constitute a violation of the applicable emission standard of this subpart.

[60 FR 43260, Aug. 18, 1995, as amended at 61 FR 29880, June 12, 1996; 63 FR 44141, Aug. 18, 1998]

§63.645 Test methods and procedures for miscellaneous process vents.

(a) To demonstrate compliance with §63.643, an owner or operator shall follow §63.116 except for §63.116 (a)(1), (d) and (e) of subpart G of this part except as provided in paragraphs (b) through (d) and paragraph (i) of this section.

(b) All references to §63.113(a)(1) or (a)(2) in §63.116 of subpart G of this part shall be replaced with §63.643(a)(1) or (a)(2), respectively.

(c) In §63.116(c)(4)(ii)(C) of subpart G of this part, organic HAP's in the list of HAP's in table 1 of this subpart shall be considered instead of the organic HAP's in table 2 of subpart F of this part.

(d) All references to §63.116(b)(1) or (b)(2) shall be replaced with paragraphs (d)(1) and (d)(2) of this section, respectively.

(1) Any boiler or process heater with a design heat input capacity of 44 megawatts or greater.

(2) Any boiler or process heater in which all vent streams are introduced into the flame zone.

(e) For purposes of determining the TOC emission rate, as specified under paragraph (f) of this section, the sampling site shall be after the last product recovery device (as defined in §63.641 of this subpart) (if any recovery devices are present) but prior to the inlet of any control device (as defined in §63.641 of this subpart) that is present, prior to any dilution of the process vent stream, and prior to release to the atmosphere.

(1) Methods 1 or 1A of 40 CFR part 60, appendix A, as appropriate, shall be used for selection of the sampling site.

(2) No traverse site selection method is needed for vents smaller than 0.10 meter in diameter.

(f) Except as provided in paragraph (g) of this section, an owner or operator seeking to demonstrate that a process vent TOC mass flow rate is less than 33 kilograms per day for an existing source or less than 6.8 kilograms

per day for a new source in accordance with the Group 2 process vent definition of this subpart shall determine the TOC mass flow rate by the following procedures:

(1) The sampling site shall be selected as specified in paragraph (e) of this section.

(2) The gas volumetric flow rate shall be determined using Methods 2, 2A, 2C, or 2D of 40 CFR part 60, appendix A, as appropriate.

(3) Method 18 or Method 25A of 40 CFR part 60, appendix A shall be used to measure concentration; alternatively, any other method or data that has been validated according to the protocol in Method 301 of appendix A of this part may be used. If Method 25A is used, and the TOC mass flow rate calculated from the Method 25A measurement is greater than or equal to 33 kilograms per day for an existing source or 6.8 kilograms per day for a new source, Method 18 may be used to determine any non-VOC hydrocarbons that may be deducted to calculate the TOC (minus non-VOC hydrocarbons) concentration and mass flow rate. The following procedures shall be used to calculate parts per million by volume concentration:

(i) The minimum sampling time for each run shall be 1 hour in which either an integrated sample or four grab samples shall be taken. If grab sampling is used, then the samples shall be taken at approximately equal intervals in time, such as 15-minute intervals during the run.

(ii) The TOC concentration (C_{TOC}) is the sum of the concentrations of the individual components and shall be computed for each run using the following equation if Method 18 is used:

$$C_{TOC} = \frac{\sum_{i=1}^{x}\left(\sum_{j=1}^{n} C_{ji}\right)}{X}$$

where:

C_{TOC}=Concentration of TOC (minus methane and ethane), dry basis, parts per million by volume.

C_{ji}=Concentration of sample component j of the sample i, dry basis, parts per million by volume.

n=Number of components in the sample.

x=Number of samples in the sample run.

(4) The emission rate of TOC (minus methane and ethane) (E_{TOC}) shall be calculated using the following equation if Method 18 is used:

$$E = K_2\left[\sum_{j=1}^{n} C_j M_j\right] Q_s$$

where:

E=Emission rate of TOC (minus methane and ethane) in the sample, kilograms per day.

K_2 = Constant, 5.986×10^{-5} (parts per million)$^{-1}$ (gram-mole per standard cubic meter) (kilogram per gram) (minute per day), where the standard temperature (standard cubic meter) is at 20 °C.

C_j=Concentration on a dry basis of organic compound j in parts per million as measured by Method 18 of 40 CFR part 60, appendix A, as indicated in paragraph (f)(3) of this section. C_j includes all organic compounds measured minus methane and ethane.

M_j=Molecular weight of organic compound j, gram per gram-mole.

Q_s=Vent stream flow rate, dry standard cubic meters per minute, at a temperature of 20 °C.

(5) If Method 25A is used, the emission rate of TOC (E_{TOC}) shall be calculated using the following equation:

$$E_{TOC}=K_2C_{TOC}MQ_s$$

where:

E_{TOC}=Emission rate of TOC (minus methane and ethane) in the sample, kilograms per day.

K_2=Constant, 5.986×10^{-5} (parts per million)$^{-1}$ (gram-mole per standard cubic meter) (kilogram per gram)(minute per day), where the standard temperature (standard cubic meter) is at 20 °C.

C_{TOC}=Concentration of TOC on a dry basis in parts per million volume as measured by Method 25A of 40 CFR part 60, appendix A, as indicated in paragraph (f)(3) of this section.

M=Molecular weight of organic compound used to express units of C_{TOC}, gram per gram-mole.

Q_s=Vent stream flow rate, dry standard cubic meters per minute, at a temperature of 20 °C.

(g) Engineering assessment may be used to determine the TOC emission rate for the representative operating condition expected to yield the highest daily emission rate.

(1) Engineering assessment includes, but is not limited to, the following:

(i) Previous test results provided the tests are representative of current operating practices at the process unit.

(ii) Bench-scale or pilot-scale test data representative of the process under representative operating conditions.

(iii) TOC emission rate specified or implied within a permit limit applicable to the process vent.

(iv) Design analysis based on accepted chemical engineering principles, measurable process parameters, or physical or chemical laws or properties. Examples of analytical methods include, but are not limited to:

(A) Use of material balances based on process stoichiometry to estimate maximum TOC concentrations;

(B) Estimation of maximum flow rate based on physical equipment design such as pump or blower capacities; and

(C) Estimation of TOC concentrations based on saturation conditions.

(v) All data, assumptions, and procedures used in the engineering assessment shall be documented.

(h) The owner or operator of a Group 2 process vent shall recalculate the TOC emission rate for each process vent, as necessary, whenever process changes are made to determine whether the vent is in Group 1 or Group 2. Examples of process changes include, but are not limited to, changes in production capacity, production rate, or catalyst type, or whenever there is replacement, removal, or addition of recovery equipment. For purposes of this paragraph, process changes do not include: process upsets; unintentional, temporary process changes; and changes that are within the range on which the original calculation was based.

(1) The TOC emission rate shall be recalculated based on measurements of vent stream flow rate and TOC as specified in paragraphs (e) and (f) of this section, as applicable, or on best engineering assessment of the effects of the change. Engineering assessments shall meet the specifications in paragraph (g) of this section.

(2) Where the recalculated TOC emission rate is greater than 33 kilograms per day for an existing source or greater than 6.8 kilograms per day for a new source, the owner or operator shall submit a report as specified in §63.654 (f), (g), or (h) and shall comply with the appropriate provisions in §63.643 by the dates specified in §63.640.

(i) A compliance determination for visible emissions shall be conducted within 150 days of the compliance date using Method 22 of 40 CFR part 60, appendix A, to determine visible emissions.

[60 FR 43260, Aug. 18, 1995, as amended at 61 FR 29880, June 12, 1996; 63 FR 44141, Aug. 18, 1998]

§63.646 Storage vessel provisions.

(a) Each owner or operator of a Group 1 storage vessel subject to this subpart shall comply with the requirements of §§63.119 through 63.121 except as provided in paragraphs (b) through (l) of this section.

(b) As used in this section, all terms not defined in §63.641 shall have the meaning given them in 40 CFR part 63, subparts A or G. The Group 1 storage vessel definition presented in §63.641 shall apply in lieu of the Group 1 storage vessel definitions presented in tables 5 and 6 of §63.119 of subpart G of this part.

(1) An owner or operator may use good engineering judgement or test results to determine the stored liquid weight percent total organic HAP for purposes of group determination. Data, assumptions, and procedures used in the determination shall be documented.

(2) When an owner or operator and the Administrator do not agree on whether the annual average weight percent organic HAP in the stored liquid is above or below 4 percent for a storage vessel at an existing source or above or below 2 percent for a storage vessel at a new source, Method 18 of 40 CFR part 60, appendix A shall be used.

(c) The following paragraphs do not apply to storage vessels at existing sources subject to this subpart: §63.119 (b)(5), (b)(6), (c)(2), and (d)(2).

(d) References shall apply as specified in paragraphs (d)(1) through (d)(10) of this section.

(1) All references to §63.100(k) of subpart F of this part (or the schedule provisions and the compliance date) shall be replaced with §63.640(h),

(2) All references to April 22, 1994 shall be replaced with August 18, 1995.

(3) All references to December 31, 1992 shall be replaced with July 15, 1994.

(4) All references to the compliance dates specified in §63.100 of subpart F shall be replaced with §63.640 (h) through (m).

(5) All references to §63.150 in §63.119 of subpart G of this part shall be replaced with §63.652.

(6) All references to §63.113(a)(2) of subpart G shall be replaced with §63.643(a)(2) of this subpart.

(7) All references to §63.126(b)(1) of subpart G shall be replaced with §63.422(b) of subpart R of this part.

(8) All references to §63.128(a) of subpart G shall be replaced with §63.425, paragraphs (a) through (c) and (e) through (h) of subpart R of this part.

(9) All references to §63.139(d)(1) in §63.120(d)(1)(ii) of subpart G are not applicable. For sources subject to this subpart, such references shall mean that 40 CFR 61.355 is applicable.

(10) All references to §63.139(c) in §63.120(d)(1)(ii) of subpart G are not applicable. For sources subject to this subpart, such references shall mean that §63.647 of this subpart is applicable.

(e) When complying with the inspection requirements of §63.120 of subpart G of this part, owners and operators of storage vessels at existing sources subject to this subpart are not required to comply with the provisions for gaskets, slotted membranes, and sleeve seals.

(f) The following paragraphs (f)(1), (f)(2), and (f)(3) of this section apply to Group 1 storage vessels at existing sources:

(1) If a cover or lid is installed on an opening on a floating roof, the cover or lid shall remain closed except when the cover or lid must be open for access.

(2) Rim space vents are to be set to open only when the floating roof is not floating or when the pressure beneath the rim seal exceeds the manufacturer's recommended setting.

(3) Automatic bleeder vents are to be closed at all times when the roof is floating except when the roof is being floated off or is being landed on the roof leg supports.

(g) Failure to perform inspections and monitoring required by this section shall constitute a violation of the applicable standard of this subpart.

(h) References in §§63.119 through 63.121 to §63.122(g)(1), §63.151, and references to initial notification requirements do not apply.

(i) References to the Implementation Plan in §63.120, paragraphs (d)(2) and (d)(3)(i) shall be replaced with the Notification of Compliance Status report.

(j) References to the Notification of Compliance Status report in §63.152(b) shall be replaced with §63.654(f).

(k) References to the Periodic Reports in §63.152(c) shall be replaced with §63.654(g).

(l) The State or local permitting authority can waive the notification requirements of §§63.120(a)(5), 63.120(a)(6), 63.120(b)(10)(ii), and 63.120(b)(10)(iii) for all or some storage vessels at petroleum refineries subject to this subpart. The State or local permitting authority may also grant permission to refill storage vessels sooner than 30 days after submitting the notifications in §§63.120(a)(6) or 63.120(b)(10)(iii) for all storage vessels at a refinery or for individual storage vessels on a case-by-case basis.

[60 FR 43260, Aug. 18, 1995, as amended at 61 FR 29880, June 12, 1996; 62 FR 7939, Feb. 21, 1997]

§ 63.647 Wastewater provisions.

(a) Except as provided in paragraph (b) of this section, each owner or operator of a Group 1 wastewater stream shall comply with the requirements of §§61.340 through 61.355 of 40 CFR part 61, subpart FF for each process wastewater stream that meets the definition in §63.641.

(b) As used in this section, all terms not defined in §63.641 shall have the meaning given them in the Clean Air Act or in 40 CFR part 61, subpart FF, §61.341.

(c) Each owner or operator required under subpart FF of 40 CFR part 61 to perform periodic measurement of benzene concentration in wastewater, or to monitor process or control device operating parameters shall operate in a manner consistent with the minimum or maximum (as appropriate) permitted concentration or operating parameter values. Operation of the process, treatment unit, or control device

resulting in a measured concentration or operating parameter value outside the permitted limits shall constitute a violation of the emission standards. Failure to perform required leak monitoring for closed vent systems and control devices or failure to repair leaks within the time period specified in subpart FF of 40 CFR part 61 shall constitute a violation of the standard.

§ 63.648 Equipment leak standards.

(a) Each owner or operator of an existing source subject to the provisions of this subpart shall comply with the provisions of 40 CFR part 60 subpart VV and paragraph (b) of this section except as provided in paragraphs (a)(1), (a)(2), and (c) through (i) of this section. Each owner or operator of a new source subject to the provisions of this subpart shall comply with subpart H of this part except as provided in paragraphs (c) through (i) of this section.

(1) For purposes of compliance with this section, the provisions of 40 CFR part 60, subpart VV apply only to equipment in organic HAP service, as defined in §63.641 of this subpart.

(2) Calculation of percentage leaking equipment components for subpart VV of 40 CFR part 60 may be done on a process unit basis or a sourcewide basis. Once the owner or operator has decided, all subsequent calculations shall be on the same basis unless a permit change is made.

(b) The use of monitoring data generated before August 18, 1995 to qualify for less frequent monitoring of valves and pumps as provided under 40 CFR part 60 subpart VV or subpart H of this part and paragraph (c) of this section (i.e., quarterly or semiannually) is governed by the requirements of paragraphs (b)(1) and (b)(2) of this section.

(1) Monitoring data must meet the test methods and procedures specified in §60.485(b) of 40 CFR part 60, subpart VV or §63.180(b)(1) through (b)(5) of subpart H of this part except for minor departures.

(2) Departures from the criteria specified in §60.485(b) of 40 CFR part 60 subpart VV or §63.180(b)(1) through (b)(5) of subpart H of this part or from the monitoring frequency specified in subpart VV or in paragraph (c) of this section (such as every 6 weeks instead of monthly or quarterly) are minor and do not significantly affect the quality of the data. An example of a minor departure is monitoring at a slightly different frequency (such as every 6 weeks instead of monthly or quarterly). Failure to use a calibrated instrument is not considered a minor departure.

(c) In lieu of complying with the existing source provisions of paragraph (a) in this section, an owner or operator may elect to comply with the requirements of §§63.161 through 63.169, 63.171, 63.172, 63.175, 63.176, 63.177, 63.179, and 63.180 of subpart H of this part except as provided in paragraphs (c)(1) through (c)(10) and (e) through (i) of this section.

(1) The instrument readings that define a leak for light liquid pumps subject to §63.163 of subpart H of this part and gas/vapor and light liquid valves subject to §63.168 of subpart H of this part are specified in table 2 of this subpart.

(2) In phase III of the valve standard, the owner or operator may monitor valves for leaks as specified in paragraphs (c)(2)(i) or (c)(2)(ii) of this section.

(i) If the owner or operator does not elect to monitor connectors, then the owner or operator shall monitor valves according to the frequency specified in table 8 of this subpart.

(ii) If an owner or operator elects to monitor connectors according to the provisions of §63.649, paragraphs (b), (c), or (d), then the owner or operator shall monitor valves at the frequencies specified in table 9 of this subpart.

(3) The owner or operator shall decide no later than the first required monitoring period after the phase I compliance date specified in §63.640(h) whether to calculate the percentage leaking valves on a process unit basis or on a sourcewide basis. Once the owner or operator has decided, all subsequent calculations shall be on the same basis unless a permit change is made.

(4) The owner or operator shall decide no later than the first monitoring period after the phase III compliance date specified in §63.640(h) whether to monitor connectors according to the provisions in §63.649, paragraphs (b), (c), or (d).

(5) Connectors in gas/vapor service or light liquid service are subject to the requirements for connectors in heavy liquid service in § 63.169 of subpart H of this part (except for the agitator provisions). The leak definition for valves, connectors, and instrumentation systems subject to § 63.169 is 1,000 parts per million.

(6) In phase III of the pump standard, except as provided in paragraph (c)(7) of this section, owners or operators that achieve less than 10 percent of light liquid pumps leaking or three light liquid pumps leaking, whichever is greater, shall monitor light liquid pumps monthly.

(7) Owners or operators that achieve less than 3 percent of light liquid pumps leaking or one light liquid pump leaking, whichever is greater, shall monitor light liquid pumps quarterly.

(8) An owner or operator may make the election described in paragraphs (c)(3) and (c)(4) of this section at any time except that any election to change after the initial election shall be treated as a permit modification according to the terms of part 70 of this chapter.

(9) When complying with the requirements of § 63.168(e)(3)(i), non-repairable valves shall be included in the calculation of percent leaking valves the first time the valve is identified as leaking and non-repairable. Otherwise, a number of non-repairable valves up to a maximum of 1 percent per year of the total number of valves in organic HAP service up to a maximum of 3 percent may be excluded from calculation of percent leaking valves for subsequent monitoring periods. When the number of non-repairable valves exceeds 3 percent of the total number of valves in organic HAP service, the number of non-repairable valves exceeding 3 percent of the total number shall be included in the calculation of percent leaking valves.

(10) If in phase III of the valve standard any valve is designated as being leakless, the owner or operator has the option of following the provisions of 40 CFR 60.482-7(f). If an owner or operator chooses to comply with the provisions of 40 CFR 60.482-7(f), the valve is exempt from the valve monitoring provisions of § 63.168 of subpart H of this part.

(d) Upon startup of new sources, the owner or operator shall comply with § 63.163(a)(1)(ii) of subpart H of this part for light liquid pumps and § 63.168(a)(1)(ii) of subpart H of this part for gas/vapor and light liquid valves.

(e) For reciprocating pumps in heavy liquid service and agitators in heavy liquid service, owners and operators are not required to comply with the requirements in § 63.169 of subpart H of this part.

(f) Reciprocating pumps in light liquid service are exempt from §§ 63.163 and 60.482 if recasting the distance piece or reciprocating pump replacement is required.

(g) Compressors in hydrogen service are exempt from the requirements of paragraphs (a) and (c) of this section if an owner or operator demonstrates that a compressor is in hydrogen service.

(1) Each compressor is presumed not to be in hydrogen service unless an owner or operator demonstrates that the piece of equipment is in hydrogen service.

(2) For a piece of equipment to be considered in hydrogen service, it must be determined that the percentage hydrogen content can be reasonably expected always to exceed 50 percent by volume.

(i) For purposes of determining the percentage hydrogen content in the process fluid that is contained in or contacts a compressor, the owner or operator shall use either:

(A) Procedures that conform to those specified in § 60.593(b)(2) of 40 part 60, subpart GGG.

(B) Engineering judgment to demonstrate that the percentage content exceeds 50 percent by volume, provided the engineering judgment demonstrates that the content clearly exceeds 50 percent by volume.

(1) When an owner or operator and the Administrator do not agree on whether a piece of equipment is in hydrogen service, the procedures in paragraph (g)(2)(i)(A) of this section shall be used to resolve the disagreement.

(2) If an owner or operator determines that a piece of equipment is in hydrogen service, the determination

can be revised only by following the procedures in paragraph (g)(2)(i)(A) of this section.

(h) Each owner or operator of a source subject to the provisions of this subpart must maintain all records for a minimum of 5 years.

(i) Reciprocating compressors are exempt from seal requirements if recasting the distance piece or compressor replacement is required.

[60 FR 43260, Aug. 18, 1995, as amended at 61 FR 29880, June 12, 1996; 63 FR 44141, Aug. 18, 1998]

§63.649 Alternative means of emission limitation: Connectors in gas/vapor service and light liquid service.

(a) If an owner or operator elects to monitor valves according to the provisions of §63.648(c)(2)(ii), the owner or operator shall implement one of the connector monitoring programs specified in paragraphs (b), (c), or (d) of this section.

(b) *Random 200 connector alternative.* The owner or operator shall implement a random sampling program for accessible connectors of 2.0 inches nominal diameter or greater. The program does not apply to inaccessible or unsafe-to-monitor connectors, as defined in §63.174 of subpart H. The sampling program shall be implemented source-wide.

(1) Within the first 12 months after the phase III compliance date specified in §63.640(h), a sample of 200 connectors shall be randomly selected and monitored using Method 21 of 40 CFR part 60, appendix A.

(2) The instrument reading that defines a leak is 1,000 parts per million.

(3) When a leak is detected, it shall be repaired as soon as practicable, but no later than 15 calendar days after the leak is detected except as provided in paragraph (e) of this section. A first attempt at repair shall be made no later than 5 calendar days after the leak is detected.

(4) If a leak is detected, the connector shall be monitored for leaks within the first 3 months after its repair.

(5) After conducting the initial survey required in paragraph (b)(1) of this section, the owner or operator shall conduct subsequent monitoring of connectors at the frequencies specified in paragraphs (b)(5)(i) through (b)(5)(iv) of this section.

(i) If the percentage leaking connectors is 2.0 percent or greater, the owner or operator shall survey a random sample of 200 connectors once every 6 months.

(ii) If the percentage leaking connectors is 1.0 percent or greater but less than 2.0 percent, the owner or operator shall survey a random sample of 200 connectors once per year.

(iii) If the percentage leaking connectors is 0.5 percent or greater but less than 1.0 percent, the owner or operator shall survey a random sample of 200 connectors once every 2 years.

(iv) If the percentage leaking connectors is less than 0.5 percent, the owner or operator shall survey a random sample of 200 connectors once every 4 years.

(6) Physical tagging of the connectors to indicate that they are subject to the monitoring provisions is not required. Connectors may be identified by the area or length of pipe and need not be individually identified.

(c) *Connector inspection alternative.* The owner or operator shall implement a program to monitor all accessible connectors in gas/vapor service that are 2.0 inches (nominal diameter) or greater and inspect all accessible connectors in light liquid service that are 2 inches (nominal diameter) or greater as described in paragraphs (c)(1) through (c)(7) of this section. The program does not apply to inaccessible or unsafe-to-monitor connectors.

(1) Within 12 months after the phase III compliance date specified in §63.640(h), all connectors in gas/vapor service shall be monitored using Method 21 of 40 CFR part 60 appendix A. The instrument reading that defines a leak is 1,000 parts per million.

(2) All connectors in light liquid service shall be inspected for leaks. A leak is detected if liquids are observed to be dripping at a rate greater than three drops per minute.

(3) When a leak is detected, it shall be repaired as soon as practicable, but no later than 15 calendar days after the leak is detected except as provided in paragraph (e) of this section. A first attempt at repair shall be made no later

than 5 calendar days after the leak is detected.

(4) If a leak is detected, connectors in gas/vapor service shall be monitored for leaks within the first 3 months after repair. Connectors in light liquid service shall be inspected for indications of leaks within the first 3 months after repair. A leak is detected if liquids are observed to be dripping at a rate greater than three drops per minute.

(5) After conducting the initial survey required in paragraphs (c)(1) and (c)(2) of this section, the owner or operator shall conduct subsequent monitoring at the frequencies specified in paragraphs (c)(5)(i) through (c)(5)(iii) of this section.

(i) If the percentage leaking connectors is 2.0 percent or greater, the owner or operator shall monitor or inspect, as applicable, the connectors once per year.

(ii) If the percentage leaking connectors is 1.0 percent or greater but less than 2.0 percent, the owner or operator shall monitor or inspect, as applicable, the connectors once every 2 years.

(iii) If the percentage leaking connectors is less than 1.0 percent, the owner or operator shall monitor or inspect, as applicable, the connectors once every 4 years.

(6) The percentage leaking connectors shall be calculated for connectors in gas/vapor service and for connectors in light liquid service. The data for the two groups of connectors shall not be pooled for the purpose of determining the percentage leaking connectors.

(i) The percentage leaking connectors shall be calculated as follows:

$$\% C_L = [(C_L - C_{AN})/C_t + C_e)] \times 100$$

where:

$\% C_L$=Percentage leaking connectors.

C_L=Number of connectors including nonrepairables, measured at 1,000 parts per million or greater, by Method 21 of 40 CFR part 60, Appendix A.

C_{AN}=Number of allowable nonrepairable connectors, as determined by monitoring, not to exceed 3 percent of the total connector population, C_t.

C_t=Total number of monitored connectors, including nonrepairables, in the process unit.

C_e=Optional credit for removed connectors=0.67×net number (i.e., the total number of connectors removed minus the total added) of connectors in organic HAP service removed from the process unit after the applicability date set forth in § 63.640(h)(4)(iii) for existing process units, and after the date of start-up for new process units. If credits are not taken, then C_e=0.

(ii) Nonrepairable connectors shall be included in the calculation of percentage leaking connectors the first time the connector is identified as leaking and nonrepairable. Otherwise, a number of nonrepairable connectors up to a maximum of 1 percent per year of the total number of connectors in organic HAP service up to a maximum of 3 percent may be excluded from calculation of percentage leaking connectors for subsequent monitoring periods.

(iii) If the number of nonrepairable connectors exceeds 3 percent of the total number of connectors in organic HAP service, the number of nonrepairable connectors exceeding 3 percent of the total number shall be included in the calculation of the percentage leaking connectors.

(7) Physical tagging of the connectors to indicate that they are subject to the monitoring provisions is not required. Connectors may be identified by the area or length of pipe and need not be individually identified.

(d) *Subpart H program.* The owner or operator shall implement a program to comply with the provisions in § 63.174 of this part.

(e) Delay of repair of connectors for which leaks have been detected is allowed if repair is not technically feasible by normal repair techniques without a process unit shutdown. Repair of this equipment shall occur by the end of the next process unit shutdown.

(1) Delay of repair is allowed for equipment that is isolated from the process and that does not remain in organic HAP service.

(2) Delay of repair for connectors is also allowed if:

(i) The owner or operator determines that emissions of purged material resulting from immediate repair would be greater than the fugitive emissions likely to result from delay of repair, and

(ii) When repair procedures are accomplished, the purged material would be collected and destroyed or recovered in a control device.

(f) Any connector that is designated as an unsafe-to-repair connector is exempt from the requirements of paragraphs (b)(3) and (b)(4), (c)(3) and (c)(4), or (d) of this section if:

(1) The owner or operator determines that repair personnel would be exposed to an immediate danger as a consequence of complying with paragraphs (b)(3) and (b)(4), (c)(3) and (c)(4), of this section; or

(2) The connector will be repaired before the end of the next scheduled process unit shutdown.

(g) The owner or operator shall maintain records to document that the connector monitoring or inspections have been conducted as required and to document repair of leaking connectors as applicable.

§63.650 Gasoline loading rack provisions.

(a) Except as provided in paragraphs (b) through (c) of this section, each owner or operator of a gasoline loading rack classified under Standard Industrial Classification code 2911 located within a contiguous area and under common control with a petroleum refinery shall comply with subpart R, §§63.421, 63.422 (a) through (c), 63.425 (a) through (c), 63.425 (e) through (h), 63.427 (a) and (b), and 63.428 (b), (c), (g)(1), and (h)(1) through (h)(3).

(b) As used in this section, all terms not defined in §63.641 shall have the meaning given them in subpart A or in 40 CFR part 63, subpart R. The §63.641 definition of "affected source" applies under this section.

(c) Gasoline loading racks regulated under this subpart are subject to the compliance dates specified in §63.640(h).

[60 FR 43260, Aug. 18, 1995, as amended at 61 FR 29880, June 12, 1996]

§63.651 Marine tank vessel loading operation provisions.

(a) Except as provided in paragraphs (b) through (d) of this section, each owner or operator of a marine tank vessel loading operation located at a petroleum refinery shall comply with the requirements of §§63.560 through 63.567.

(b) As used in this section, all terms not defined in §63.641 shall have the meaning given them in subpart A or in 40 CFR part 63, subpart Y. The §63.641 definition of "affected source" applies under this section.

(c) The Initial Notification Report under §63.567(b) is not required.

(d) The compliance time of 4 years after promulgation of 40 CFR part 63, subpart Y does not apply. The compliance time is specified in §63.640(h)(3).

[60 FR 43260, Aug. 18, 1995, as amended at 61 FR 29880, June 12, 1996]

§63.652 Emissions averaging provisions.

(a) This section applies to owners or operators of existing sources who seek to comply with the emission standard in §63.642(g) by using emissions averaging according to §63.642(l) rather than following the provisions of §§63.643 through 63.647, and §§63.650 and 63.651. Existing marine tank vessel loading operations unable to comply with the standard by using emissions averaging are those marine tank vessels subject to 40 CFR 63.562(e) of this part and the Valdez Marine Terminal source.

(b) The owner or operator shall develop and submit for approval an Implementation Plan containing all of the information required in §63.653(d) for all points to be included in an emissions average. The Implementation Plan shall identify all emission points to be included in the emissions average. This must include any Group 1 emission points to which the reference control technology (defined in §63.641) is not applied and all other emission points being controlled as part of the average.

(c) The following emission points can be used to generate emissions averaging credits if control was applied after November 15, 1990 and if sufficient information is available to determine the appropriate value of credits for the emission point:

(1) Group 2 emission points;

(2) Group 1 storage vessels, Group 1 wastewater streams, Group 1 gasoline loading racks, Group 1 marine tank vessels, and Group 1 miscellaneous process vents that are controlled by a technology that the Administrator or permitting authority agrees has a

higher nominal efficiency than the reference control technology. Information on the nominal efficiencies for such technologies must be submitted and approved as provided in paragraph (i) of this section; and

(3) Emission points from which emissions are reduced by pollution prevention measures. Percentages of reduction for pollution prevention measures shall be determined as specified in paragraph (j) of this section.

(i) For a Group 1 emission point, the pollution prevention measure must reduce emissions more than the reference control technology would have had the reference control technology been applied to the emission point instead of the pollution prevention measure except as provided in paragraph (c)(3)(ii) of this section.

(ii) If a pollution prevention measure is used in conjunction with other controls for a Group 1 emission point, the pollution prevention measure alone does not have to reduce emissions more than the reference control technology, but the combination of the pollution prevention measure and other controls must reduce emissions more than the reference control technology would have had it been applied instead.

(d) The following emission points cannot be used to generate emissions averaging credits:

(1) Emission points already controlled on or before November 15, 1990 unless the level of control is increased after November 15, 1990, in which case credit will be allowed only for the increase in control after November 15, 1990;

(2) Group 1 emission points that are controlled by a reference control technology unless the reference control technology has been approved for use in a different manner and a higher nominal efficiency has been assigned according to the procedures in paragraph (i) of this section. For example, it is not allowable to claim that an internal floating roof meeting only the specifications stated in the reference control technology definition in § 63.641 (i.e., that meets the specifications of § 63.119(b) of subpart G but does not have controlled fittings per § 63.119 (b)(5) and (b)(6) of subpart G) applied to a storage vessel is achieving greater than 95 percent control;

(3) Emission points on shutdown process units. Process units that are shut down cannot be used to generate credits or debits;

(4) Wastewater that is not process wastewater or wastewater streams treated in biological treatment units. These two types of wastewater cannot be used to generate credits or debits. Group 1 wastewater streams cannot be left undercontrolled or uncontrolled to generate debits. For the purposes of this section, the terms "wastewater" and "wastewater stream" are used to mean process wastewater; and

(5) Emission points controlled to comply with a State or Federal rule other than this subpart, unless the level of control has been increased after November 15, 1990 above what is required by the other State or Federal rule. Only the control above what is required by the other State or Federal rule will be credited. However, if an emission point has been used to generate emissions averaging credit in an approved emissions average, and the point is subsequently made subject to a State or Federal rule other than this subpart, the point can continue to generate emissions averaging credit for the purpose of complying with the previously approved average.

(e) For all points included in an emissions average, the owner or operator shall:

(1) Calculate and record monthly debits for all Group 1 emission points that are controlled to a level less stringent than the reference control technology for those emission points. Equations in paragraph (g) of this section shall be used to calculate debits.

(2) Calculate and record monthly credits for all Group 1 or Group 2 emission points that are overcontrolled to compensate for the debits. Equations in paragraph (h) of this section shall be used to calculate credits. Emission points and controls that meet the criteria of paragraph (c) of this section may be included in the credit calculation, whereas those described in paragraph (d) of this section shall not be included.

(3) Demonstrate that annual credits calculated according to paragraph (h)

of this section are greater than or equal to debits calculated for the same annual compliance period according to paragraph (g) of this section.

(i) The initial demonstration in the Implementation Plan that credit-generating emission points will be capable of generating sufficient credits to offset the debits from the debit-generating emission points must be made under representative operating conditions.

(ii) After the compliance date, actual operating data will be used for all debit and credit calculations.

(4) Demonstrate that debits calculated for a quarterly (3-month) period according to paragraph (g) of this section are not more than 1.30 times the credits for the same period calculated according to paragraph (h) of this section. Compliance for the quarter shall be determined based on the ratio of credits and debits from that quarter, with 30 percent more debits than credits allowed on a quarterly basis.

(5) Record and report quarterly and annual credits and debits in the Periodic Reports as specified in §63.654(g)(8). Every fourth Periodic Report shall include a certification of compliance with the emissions averaging provisions as required by §63.654(g)(8)(iii).

(f) Debits and credits shall be calculated in accordance with the methods and procedures specified in paragraphs (g) and (h) of this section, respectively, and shall not include emissions from the following:

(1) More than 20 individual emission points. Where pollution prevention measures (as specified in paragraph (j)(1) of this section) are used to control emission points to be included in an emissions average, no more than 25 emission points may be included in the average. For example, if two emission points to be included in an emissions average are controlled by pollution prevention measures, the average may include up to 22 emission points.

(2) Periods of startup, shutdown, and malfunction as described in the source's startup, shutdown, and malfunction plan required by §63.6(e)(3) of subpart A of this part.

(3) For emission points for which continuous monitors are used, periods of excess emissions as defined in §63.654(g)(6)(i). For these periods, the calculation of monthly credits and debits shall be adjusted as specified in paragraphs (f)(3)(i) through (f)(3)(iii) of this section.

(i) No credits would be assigned to the credit-generating emission point.

(ii) Maximum debits would be assigned to the debit-generating emission point.

(iii) The owner or operator may use the procedures in paragraph (l) of this section to demonstrate to the Administrator that full or partial credits or debits should be assigned.

(g) Debits are generated by the difference between the actual emissions from a Group 1 emission point that is uncontrolled or is controlled to a level less stringent than the reference control technology, and the emissions allowed for Group 1 emission point. Debits shall be calculated as follows:

(1) The overall equation for calculating sourcewide debits is:

$$\text{Debits} = \sum_{i=1}^{n}\left(EPV_{iACTUAL} - (0.02)\,EPV_{iu}\right) + \sum_{i=1}^{n}\left(ES_{iACTUAL} - (0.05)\,ES_{iu}\right) + \sum_{i=1}^{n}\left(EGLR_{iACTUAL} - EGLR_{iC}\right) + \sum_{i=1}^{n}\left(EMV_{iACTUAL} - (0.03)\,EMViu\right)$$

where:

Debits and all terms of the equation are in units of megagrams per month, and

$EPV_{iACTUAL}$=Emissions from each Group 1 miscellaneous process vent i that is uncontrolled or is controlled to a level less stringent than the reference control technology. This is calculated according to paragraph (g)(2) of this section.

(0.02) EPV_{iu}=Emissions from each Group 1 miscellaneous process vent i if the reference control technology had been applied

to the uncontrolled emissions, calculated according to paragraph (g)(2) of this section.

$ES_{iACTUAL}$=Emissions from each Group 1 storage vessel i that is uncontrolled or is controlled to a level less stringent than the reference control technology. This is calculated according to paragraph (g)(3) of this section.

(0.05) ES_{iu}=Emissions from each Group 1 storage vessel i if the reference control technology had been applied to the uncontrolled emissions, calculated according to paragraph (g)(3) of this section.

$EGLR_{iACTUAL}$=Emissions from each Group 1 gasoline loading rack i that is uncontrolled or is controlled to a level less stringent than the reference control technology. This is calculated according to paragraph (g)(4) of this section.

$EGLR_{iu}$=Emissions from each Group 1 gasoline loading rack i if the reference control technology had been applied to the uncontrolled emissions. This is calculated according to paragraph (g)(4) of this section.

EMV_{ACTUAL}=Emissions from each Group 1 marine tank vessel i that is uncontrolled or is controlled to a level less stringent than the reference control technology. This is calculated according to paragraph (g)(5) of this section.

(0.03) EMV_{iu}=Emissions from each Group 1 marine tank vessel i if the reference control technology had been applied to the uncontrolled emissions calculated according to paragraph (g)(5) of this section.

n=The number of Group 1 emission points being included in the emissions average. The value of n is not necessarily the same for each kind of emission point.

(2) Emissions from miscellaneous process vents shall be calculated as follows:

(i) For purposes of determining miscellaneous process vent stream flow rate, organic HAP concentrations, and temperature, the sampling site shall be after the final product recovery device, if any recovery devices are present; before any control device (for miscellaneous process vents, recovery devices shall not be considered control devices); and before discharge to the atmosphere. Method 1 or 1A of part 60, appendix A shall be used for selection of the sampling site.

(ii) The following equation shall be used for each miscellaneous process vent i to calculate EPV_{iu}:

$$EPV_{iu} = \left(2.494 \times 10^{-9}\right) Qh \left(\sum_{j=1}^{n} C_j M_j\right)$$

where:

EPV_{iu}=Uncontrolled process vent emission rate from miscellaneous process vent i, megagrams per month.

Q=Vent stream flow rate, dry standard cubic meters per minute, measured using Methods 2, 2A, 2C, or 2D of part 60 appendix A, as appropriate.

h=Monthly hours of operation during which positive flow is present in the vent, hours per month.

C_j=Concentration, parts per million by volume, dry basis, of organic HAP j as measured by Method 18 of part 60 appendix A.

M_j=Molecular weight of organic HAP j, gram per gram-mole.

n=Number of organic HAP's in the miscellaneous process vent stream.

(A) The values of Q, C_j, and M_j shall be determined during a performance test conducted under representative operating conditions. The values of Q, C_j, and M_j shall be established in the Notification of Compliance Status report and must be updated as provided in paragraph (g)(2)(ii)(B) of this section.

(B) If there is a change in capacity utilization other than a change in monthly operating hours, or if any other change is made to the process or product recovery equipment or operation such that the previously measured values of Q, C_j, and M_j are no longer representative, a new performance test shall be conducted to determine new representative values of Q, C_j, and M_j. These new values shall be used to calculate debits and credits from the time of the change forward, and the new values shall be reported in the next Periodic Report.

(iii) The following procedures and equations shall be used to calculate $EPV_{iACTUAL}$:

(A) If the vent is not controlled by a control device or pollution prevention measure, $EPV_{iACTUAL}$ = EPV_{iu}, where EPV_{iu} is calculated according to the procedures in paragraphs (g)(2)(i) and (g)(2)(ii) of this section.

(B) If the vent is controlled using a control device or a pollution prevention measure achieving less than 98-percent reduction,

$$EPV_{iACTUAL} = EPV_{iu} \times \left(1 - \frac{\text{Percent reduction}}{100\%}\right)$$

(*1*) The percent reduction shall be measured according to the procedures in §63.116 of subpart G if a combustion control device is used. For a flare meeting the criteria in §63.116(a) of subpart G, or a boiler or process heater meeting the criteria in §63.645(d) of this subpart or §63.116(b) of subpart G, the percentage of reduction shall be 98 percent. If a noncombustion control device is used, percentage of reduction shall be demonstrated by a performance test at the inlet and outlet of the device, or, if testing is not feasible, by a control design evaluation and documented engineering calculations.

(*2*) For determining debits from miscellaneous process vents, product recovery devices shall not be considered control devices and cannot be assigned a percentage of reduction in calculating $EPV_{iACTUAL}$. The sampling site for measurement of uncontrolled emissions is after the final product recovery device.

(*3*) Procedures for calculating the percentage of reduction of pollution prevention measures are specified in paragraph (j) of this section.

(3) Emissions from storage vessels shall be calculated as specified in §63.150(g)(3) of subpart G.

(4) Emissions from gasoline loading racks shall be calculated as follows:

(i) The following equation shall be used for each gasoline loading rack i to calculate $EGLR_{iu}$:

$$EGLR_{iu} = \left(1.20 \times 10^{-7}\right)\frac{SPMG}{T}$$

where:

$EGLR_{iu}$=Uncontrolled transfer HAP emission rate from gasoline loading rack i, megagrams per month

S=Saturation factor, dimensionless (see table 33 of subpart G).

P=Weighted average rack partial pressure of organic HAP's transferred at the rack during the month, kilopascals.

M=Weighted average molecular weight of organic HAP's transferred at the gasoline loading rack during the month, gram per gram-mole.

G=Monthly volume of gasoline transferred from gasoline loading rack, liters per month.

T=Weighted rack bulk liquid loading temperature during the month, degrees kelvin (degrees Celsius °C + 273).

(ii) The following equation shall be used for each gasoline loading rack i to calculate the weighted average rack partial pressure:

$$P = \frac{\sum_{1}^{j=n}\left(P_j\right)\left(G_j\right)}{G}$$

where:

P_j=Maximum true vapor pressure of individual organic HAP transferred at the rack, kilopascals.

G=Monthly volume of organic HAP transferred, liters per month, and

$$G = \sum_{1}^{j=n} G_j$$

G_j=Monthly volume of individual organic HAP transferred at the gasoline loading rack, liters per month.

n=Number of organic HAP's transferred at the gasoline loading rack.

(iii) The following equation shall be used for each gasoline loading rack i to calculate the weighted average rack molecular weight:

$$M = \frac{\sum_{1}^{j=n}\left(M_j\right)\left(G_j\right)}{G}$$

where:

M_j=Molecular weight of individual organic HAP transferred at the rack, gram per gram-mole.

G, G_j, and n are as defined in paragraph (g)(4)(ii) of this section.

(iv) The following equation shall be used for each gasoline loading rack i to calculate the monthly weighted rack bulk liquid loading temperature:

$$T = \frac{\sum_{j=1}^{j=n} (T_j)(G_j)}{G}$$

T_j=Average annual bulk temperature of individual organic HAP loaded at the gasoline loading rack, kelvin (degrees Celsius °C+273).

G, G_j, and n are as defined in paragraph (g)(4)(ii) of this section.

(v) The following equation shall be used to calculate $EGLR_{ic}$:

$$EGLR_{ic} = 1 \times 10^{-8} G$$

G is as defined in paragraph (g)(4)(ii) of this section.

(vi) The following procedures and equations shall be used to calculate $EGLR_{iACTUAL}$:

(A) If the gasoline loading rack is not controlled, $EGLR_{iACTUAL}=EGLR_{iu}$, where $EGLR_{iu}$ is calculated using the equations specified in paragraphs (g)(4)(i) through (g)(4)(iv) of this section.

(B) If the gasoline loading rack is controlled using a control device or a pollution prevention measure not achieving the requirement of less than 10 milligrams of TOC per liter of gasoline loaded,

$$EGLR_{iACTUAL} = EGLR_{iu}\left(\frac{1 - \text{Percent reduction}}{100\%}\right)$$

(*1*) The percent reduction for a control device shall be measured according to the procedures and test methods specified in § 63.128(a) of subpart G. If testing is not feasible, the percentage of reduction shall be determined through a design evaluation according to the procedures specified in § 63.128(h) of subpart G.

(*2*) Procedures for calculating the percentage of reduction for pollution prevention measures are specified in paragraph (j) of this section.

(5) Emissions from marine tank vessel loading shall be calculated as follows:

(i) The following equation shall be used for each marine tank vessel i to calculate EMV_{iu}:

$$EMV_{iu} = \sum_{i=1}^{m} (Q_i)(F_i)(P_i)$$

where:

EMV_{iu}=Uncontrolled marine tank vessel HAP emission rate from marine tank vessel i, megagrams per month.

Q_i=Quantity of commodity loaded (per vessel type), liters.

F_i=Emission factor, megagrams per liter.

P_i=Percent HAP.

m=Number of combinations of commodities and vessel types loaded.

Emission factors shall be based on test data or emission estimation procedures specified in § 63.565(l) of subpart Y.

(ii) The following procedures and equations shall be used to calculate $EMV_{iACTUAL}$:

(A) If the marine tank vessel is not controlled, $EMV_{iACTUAL}=EMV_{iu}$, where EMV_{iu} is calculated using the equations specified in paragraph (g)(5)(i) of this section.

(B) If the marine tank vessel is controlled using a control device or a pollution prevention measure achieving less than 97-percent reduction,

$$EMV_{iACTUAL} = EMV_{iu}\left(\frac{1 - \text{Percent reduction}}{100\%}\right)$$

(*1*) The percent reduction for a control device shall be measured according to the procedures and test methods specified in § 63.565(c) of subpart Y. If

testing is not feasible, the percentage of reduction shall be determined through a design evaluation according to the procedures specified in §63.128(h) of subpart G.

(2) Procedures for calculating the percentage of reduction for pollution prevention measures are specified in paragraph (j) of this section.

(h) Credits are generated by the difference between emissions that are allowed for each Group 1 and Group 2 emission point and the actual emissions from a Group 1 or Group 2 emission point that has been controlled after November 15, 1990 to a level more stringent than what is required by this subpart or any other State or Federal rule or statute. Credits shall be calculated as follows:

(1) The overall equation for calculating sourcewide credits is:

$$\begin{aligned}\text{Credits} = {} & D\sum_{i=1}^{n}\left((0.02)\,EPV1_{iu} - EPV1_{iACTUAL}\right) + D\sum_{i=1}^{m}\left(EPV2_{iBASE} - EPV2_{iACTUAL}\right) + \\ & D\sum_{i=1}^{n}\left((0.05)\,ES1_{iu} - ES1_{iACTUAL}\right) + D\sum_{i=1}^{m}\left(ES2_{iBASE} - ES2_{iACTUAL}\right) + \\ & D\sum_{i=1}^{n}\left(EGLR_{ic} - EGLR1_{iACTUAL}\right) + D\sum_{i=1}^{m}\left(EGLR2_{iBASE} - EGLR2_{iACTUAL}\right) + \\ & D\sum_{i=1}^{n}\left((0.03)\,EMV1_{iu} - EMV1_{iACTUAL}\right) + D\sum_{i=1}^{m}\left(EMV2_{iBASE} - EMV2_{iACTUAL}\right) + \\ & D\sum_{i=1}^{n}\left(EWW1_{ic} - EWW1_{iACTUAL}\right) + D\sum_{i=1}^{m}\left(EWW2_{iBASE} - EWW2_{iACTUAL}\right)\end{aligned}$$

where:

Credits and all terms of the equation are in units of megagrams per month, the baseline date is November 15, 1990, and

D=Discount factor=0.9 for all credit-generating emission points except those controlled by a pollution prevention measure, which will not be discounted.

$EPV1_{iACTUAL}$=Emissions for each Group 1 miscellaneous process vent i that is controlled to a level more stringent than the reference control technology, calculated according to paragraph (h)(2) of this section.

(0.02) $EPV1_{iu}$=Emissions from each Group 1 miscellaneous process vent i if the reference control technology had been applied to the uncontrolled emissions. $EPV1_{iu}$ is calculated according to paragraph (h)(2) of this section.

$EPV2_{iBASE}$=Emissions from each Group 2 miscellaneous process vent; at the baseline date, as calculated in paragraph (h)(2) of this section.

$EPV2_{iACTUAL}$=Emissions from each Group 2 miscellaneous process vent that is controlled, calculated according to paragraph (h)(2) of this section.

$ES1_{iACTUAL}$=Emissions from each Group 1 storage vessel i that is controlled to a level more stringent than the reference control technology, calculated according to paragraph (h)(3) of this section.

(0.05) $ES1_{iu}$=Emissions from each Group 1 storage vessel i if the reference control technology had been applied to the uncontrolled emissions. $ES1_{iu}$ is calculated according to paragraph (h)(3) of this section.

$ES2_{iACTUAL}$=Emissions from each Group 2 storage vessel i that is controlled, calculated according to paragraph (h)(3) of this section.

$ES2_{iBASE}$=Emissions from each Group 2 storage vessel i at the baseline date, as calculated in paragraph (h)(3) of this section.

$EGLR1_{iACTUAL}$=Emissions from each Group 1 gasoline loading rack i that is controlled to a level more stringent than the reference control technology, calculated according to paragraph (h)(4) of this section.

$EGLR_{ic}$=Emissions from each Group 1 gasoline loading rack i if the reference control technology had been applied to the uncontrolled emissions. $EGLR_{iu}$ is calculated according to paragraph (h)(4) of this section.

$EGRL2_{iACTUAL}$=Emissions from each Group 2 gasoline loading rack i that is controlled, calculated according to paragraph (h)(4) of this section.

$EGLR2_{iBASE}$=Emissions from each Group 2 gasoline loading rack i at the baseline date, as calculated in paragraph (h)(4) of this section.

$EMV1_{iACTUAL}$=Emissions from each Group 1 marine tank vessel i that is controlled to a level more stringent than the reference control technology, calculated according to paragraph (h)(4) of this section.

$(0.03)EMV1_{iu}$=Emissions from each Group 1 marine tank vessel i if the reference control technology had been applied to the uncontrolled emissions. $EMV1_{iu}$ is calculated according to paragraph (h)(5) of this section.

$EMV2_{iACTUAL}$=Emissions from each Group 2 marine tank vessel i that is controlled, calculated according to paragraph (h)(5) of this section.

$EMV2_{iBASE}$=Emissions from each Group 2 marine tank vessel i at the baseline date, as calculated in paragraph (h)(5) of this section.

$EWW1_{iACTUAL}$=Emissions from each Group 1 wastewater stream i that is controlled to a level more stringent than the reference control technology, calculated according to paragraph (h)(6) of this section.

$EWW1_{iu}$=Emissions from each Group 1 wastewater stream i if the reference control technology had been applied to the uncontrolled emissions, calculated according to paragraph (h)(6) of this section.

$EWW2_{iACTUAL}$=Emissions from each Group 2 wastewater stream i that is controlled, calculated according to paragraph (h)(6) of this section.

$EWW2_{iBASE}$=Emissions from each Group 2 wastewater stream i at the baseline date, calculated according to paragraph (h)(6) of this section.

n=Number of Group 1 emission points included in the emissions average. The value of n is not necessarily the same for each kind of emission point.

m=Number of Group 2 emission points included in the emissions average. The value of m is not necessarily the same for each kind of emission point.

(i) For an emission point controlled using a reference control technology, the percentage of reduction for calculating credits shall be no greater than the nominal efficiency associated with the reference control technology, unless a higher nominal efficiency is assigned as specified in paragraph (h)(1)(ii) of this section.

(ii) For an emission point controlled to a level more stringent than the reference control technology, the nominal efficiency for calculating credits shall be assigned as described in paragraph (i) of this section. A reference control technology may be approved for use in a different manner and assigned a higher nominal efficiency according to the procedures in paragraph (i) of this section.

(iii) For an emission point controlled using a pollution prevention measure, the nominal efficiency for calculating credits shall be determined as described in paragraph (j) of this section.

(2) Emissions from process vents shall be determined as follows:

(i) Uncontrolled emissions from miscellaneous process vents, $EPV1_{iu}$, shall be calculated according to the procedures and equation for EPV_{iu} in paragraphs (g)(2)(i) and (g)(2)(ii) of this section.

(ii) Actual emissions from miscellaneous process vents controlled using a technology with an approved nominal efficiency greater than 98 percent or a pollution prevention measure achieving greater than 98 percent emission reduction, $EPV1_{iACTUAL}$, shall be calculated according to the following equation:

$$EPV1_{iACTUAL} = EPV1_{iu}\left(1 - \frac{\text{Nominal efficiency}\%}{100\%}\right)$$

(iii) The following procedures shall be used to calculate actual emissions from Group 2 process vents, $EPV2_{iACTUAL}$:

(A) For a Group 2 process vent controlled by a control device, a recovery device applied as a pollution prevention project, or a pollution prevention measure, if the control achieves a percentage of reduction less than or equal to a 98 percent reduction,

$$EPV2_{iACTUAL} = EPV2_{iu} \times \left(1 - \frac{\text{Percent reduction}}{100\%}\right)$$

(*1*) $EPV2_{iu}$ shall be calculated according to the equations and procedures for EPV_{iu} in paragraphs (g)(2)(i) and (g)(2)(ii) of this section except as provided in paragraph (h)(2)(iii)(A)(*3*) of this section.

(*2*) The percentage of reduction shall be calculated according to the procedures in paragraphs (g)(2)(iii)(B)(*1*) through (g)(2)(iii)(B)(*3*) of this section except as provided in paragraph (h)(2)(iii)(A)(*4*) of this section.

(*3*) If a recovery device was added as part of a pollution prevention project, $EPV2_{iu}$ shall be calculated prior to that recovery device. The equation for EPV_{iu} in paragraph (g)(2)(ii) of this section shall be used to calculate $EPV2_{iu}$; however, the sampling site for measurement of vent stream flow rate and organic HAP concentration shall be at the inlet of the recovery device.

(*4*) If a recovery device was added as part of a pollution prevention project, the percentage of reduction shall be demonstrated by conducting a performance test at the inlet and outlet of that recovery device.

(B) For a Group 2 process vent controlled using a technology with an approved nominal efficiency greater than a 98 percent or a pollution prevention measure achieving greater than 98 percent reduction,

$$EPV2_{iACTUAL} = EPV2_{iu}\left(1 - \frac{\text{Nominal efficiency}\%}{100\%}\right)$$

(iv) Emissions from Group 2 process vents at baseline, $EPV2_{iBASE}$, shall be calculated as follows:

(A) If the process vent was uncontrolled on November 15, 1990, $EPV2_{iBASE}=EPV2_{iu}$, and shall be calculated according to the procedures and equation for EPV_{iu} in paragraphs (g)(2)(i) and (g)(2)(ii) of this section.

(B) If the process vent was controlled on November 15, 1990,

$$EPV2_{BASE} = EPV2_{iu}\left(1 - \frac{\text{Percent reduction}\%}{100\%}\right)$$

where $EPV2_{iu}$ is calculated according to the procedures and equation for EPV_{iu} in paragraphs (g)(2)(i) and (g)(2)(ii) of this section. The percentage of reduction shall be calculated according to the procedures specified in paragraphs (g)(2)(iii)(B)(*1*) through (g)(2)(iii)(B)(*3*) of this section.

(C) If a recovery device was added to a process vent as part of a pollution prevention project initiated after November 15, 1990, $EPV2_{iBASE}=EPV2_{iu}$, where $EPV2_{iu}$ is calculated according to paragraph (h)(2)(iii)(A)(*3*) of this section.

(3) Emissions from storage vessels shall be determined as specified in §63.150(h)(3) of subpart G, except as follows:

(i) All references to §63.119(b) in §63.150(h)(3) of subpart G shall be replaced with: §63.119 (b) or §63.119(b) except for §63.119(b)(5) and (b)(6).

(ii) All references to §63.119(c) in §63.150(h)(3) of subpart G shall be replaced with: §63.119(c) or §63.119(c) except for §63.119(c)(2).

(iii) All references to §63.119(d) in §63.150(h)(3) of subpart G shall be replaced with: §63.119(d) or §63.119(d) except for §63.119(d)(2).

(4) Emissions from gasoline loading racks shall be determined as follows:

(i) Uncontrolled emissions from Group 1 gasoline loading racks, $EGLR1_{iu}$, shall be calculated according to the procedures and equations for $EGLR_{iu}$ as described in paragraphs (g)(4)(i) through (g)(4)(iv) of this section.

(ii) Emissions from Group 1 gasoline loading racks if the reference control technology had been applied, $EGLR_{ic}$, shall be calculated according to the procedures and equations in paragraph (g)(4)(v) of this section.

(iii) Actual emissions from Group 1 gasoline loading racks controlled to less than 10 milligrams of TOC per liter of gasoline loaded; $EGLR_{iACTUAL}$, shall be calculated according to the following equation:

$$EGLR1_{iACTUAL} = EGLR1_{iu}\left(1 - \frac{\text{Nominal efficiency}}{100\%}\right)$$

(iv) The following procedures shall be used to calculate actual emissions from Group 2 gasoline loading racks, $EGLR2_{iACTUAL}$:

(A) For a Group 2 gasoline loading rack controlled by a control device or a pollution prevention measure achieving emissions reduction but where emissions are greater than the 10 milligrams of TOC per liter of gasoline loaded requirement,

$$EGLR2_{iACTUAL} = EGLR2_{iu}\left(1 - \frac{\text{Percent reduction}}{100\%}\right)$$

(*1*) $EGLR2_{iu}$ shall be calculated according to the equations and procedures for $EGLR_{iu}$ in paragraphs (g)(4)(i) through (g)(4)(iv) of this section.

(*2*) The percentage of reduction shall be calculated according to the procedures in paragraphs (g)(4)(vi)(B)(*1*) and (g)(4)(vi)(B)(*2*) of this section.

(B) For a Group 2 gasoline loading rack controlled by using a technology with an approved nominal efficiency greater than 98 percent or a pollution prevention measure achieving greater than a 98-percent reduction,

$$EGLR2_{iACTUAL} = EGLR2_{iu}\left(1 - \frac{\text{Nominal efficiency}}{100\%}\right)$$

(v) Emissions from Group 2 gasoline loading racks at baseline, $EGLR2_{iBASE}$, shall be calculated as follows:

(A) If the gasoline loading rack was uncontrolled on November 15, 1990, $EGLR2_{iBASE}=EGLR2_{iu}$, and shall be calculated according to the procedures and equations for $EGLR_{iu}$ in paragraphs (g)(4)(i) through (g)(4)(iv) of this section.

(B) If the gasoline loading rack was controlled on November 15, 1990,

$$EGLR2_{iBASE} = EGLR2_{iu}\left(1 - \frac{\text{Percent reduction}}{100\%}\right)$$

where $EGLR2_{iu}$ is calculated according to the procedures and equations for $EGLR_{iu}$ in paragraphs (g)(4)(i) through (g)(4)(iv) of this section. Percentage of reduction shall be calculated according to the procedures in paragraphs (g)(4)(vi)(B)(*1*) and (g)(4)(vi)(B)(*2*) of this section.

(5) Emissions from marine tank vessels shall be determined as follows:

(i) Uncontrolled emissions from Group 1 marine tank vessels, $EMV1_{iu}$, shall be calculated according to the procedures and equations for EMV_{iu} as described in paragraph (g)(5)(i) of this section.

(ii) Actual emissions from Group 1 marine tank vessels controlled using a technology or pollution prevention measure with an approved nominal efficiency greater than 97 percent, $EMV_{iACTUAL}$, shall be calculated according to the following equation:

$$EMV1_{iACTUAL} = EMV1_{iu}\left(1 - \frac{\text{Nominal efficiency}}{100\%}\right)$$

(iii) The following procedures shall be used to calculate actual emissions from Group 2 marine tank vessels, $EMV2_{iACTUAL}$:

(A) For a Group 2 marine tank vessel controlled by a control device or a pollution prevention measure achieving a percentage of reduction less than or equal to 97 percent reduction,

$$EMV2_{iACTUAL} = EMV2_{iu}\left(1 - \frac{\text{Percent reduction}}{100\%}\right)$$

(*1*) $EMV2_{iu}$ shall be calculated according to the equations and procedures for EMV_{iu} in paragraph (g)(5)(i) of this section.

(*2*) The percentage of reduction shall be calculated according to the procedures in paragraphs (g)(5)(ii)(B)(*1*) and (g)(5)(ii)(B)(*2*) of this section.

(B) For a Group 2 marine tank vessel controlled using a technology or a pollution prevention measure with an approved nominal efficiency greater than 97 percent,

$$EMV2_{iACTUAL} = EMV2_{iu}\left(1 - \frac{\text{Nominal efficiency}}{100\%}\right)$$

(iv) Emissions from Group 2 marine tank vessels at baseline, $EMV2_{iBASE}$, shall be calculated as follows:

(A) If the marine terminal was uncontrolled on November 15, 1990, $EMV2_{iBASE}$ equals $EMV2_{iu}$, and shall be calculated according to the procedures and equations for EMV_{iu} in paragraph (g)(5)(i) of this section.

(B) If the marine tank vessel was controlled on November 15, 1990,

$$EMV2_{iBASE} = EMV2_{iu}\left(1 - \frac{\text{Percent reduction}}{100\%}\right)$$

where $EMV2_{iu}$ is calculated according to the procedures and equations for EMV_{iu} in paragraph (g)(5)(i) of this section. Percentage of reduction shall be calculated according to the procedures in paragraphs (g)(5)(ii)(B)(*1*) and (g)(5)(ii)(B)(*2*) of this section.

(6) Emissions from wastewater shall be determined as follows:

(i) For purposes of paragraphs (h)(4)(ii) through (h)(4)(vi) of this section, the following terms will have the meaning given them in paragraphs (h)(6)(i)(A) through (h)(6)(i)(C) of this section.

(A) *Correctly suppressed* means that a wastewater stream is being managed according to the requirements of §§61.343 through 61.347 or §61.342(c)(1)(iii) of 40 CFR part 61, subpart FF, as applicable, and the emissions from the waste management units subject to those requirements are routed to a control device that reduces HAP emissions by 95 percent or greater.

(B) *Treatment process* has the meaning given in §61.341 of 40 CFR part 61, subpart FF except that it does not include biological treatment units.

(C) *Vapor control device* means the control device that receives emissions vented from a treatment process or treatment processes.

(ii) The following equation shall be used for each wastewater stream i to calculate EWW_{ic}:

$$EWW_{ic} = \left(6.0 * 10^{-8}\right) Q_i H_i \sum_{m=1}^{s} \left(1 - Fr_m\right) Fe_m HAP_{im} + (0.05)\left(6.0 * 10^{-8}\right) Q_i H_i \sum_{m=1}^{s} \left(Fr_m HAP_{im}\right)$$

where:

EWW_{ic} = Monthly wastewater stream emission rate if wastewater stream i were controlled by the reference control technology, megagrams per month.

Q_i = Average flow rate for wastewater stream i, liters per minute.

H_i = Number of hours during the month that wastewater stream i was generated, hours per month.

Fr_m=Fraction removed of organic HAP m in wastewater, from table 7 of this subpart, dimensionless.

Fe_m=Fraction emitted of organic HAP m in wastewater from table 7 of this subpart, dimensionless.

s=Total number of organic HAP's in wastewater stream i.

HAP_{im}=Average concentration of organic HAP m in wastewater stream i, parts per million by weight.

(A) HAP_{im} shall be determined for the point of generation or at a location downstream of the point of generation. Wastewater samples shall be collected using the sampling procedures specified in Method 25D of 40 CFR part 60, appendix A. Where feasible, samples shall be taken from an enclosed pipe prior to the wastewater being exposed to the atmosphere. When sampling from an enclosed pipe is not feasible, a minimum of three representative samples shall be collected in a manner to minimize exposure of the sample to the atmosphere and loss of organic HAP's prior to sampling. The samples collected may be analyzed by either of the following procedures:

(*1*) A test method or results from a test method that measures organic HAP concentrations in the wastewater, and that has been validated pursuant to section 5.1 or 5.3 of Method 301 of appendix A of this part may be used; or

(*2*) Method 305 of appendix A of this part may be used to determine C_{im}, the average volatile organic HAP concentration of organic HAP m in wastewater stream i, and then HAP_{im} may be calculated using the following equation: $HAP_{im}=C_{im}/Fm_m$, where Fm_m for organic HAP m is obtained from table 7 of this subpart.

(B) Values for Q_i, HAP_{im}, and C_{im} shall be determined during a performance

test conducted under representative conditions. The average value obtained from three test runs shall be used. The values of Q_i, HAP_{im}, and C_{im} shall be established in the Notification of Compliance Status report and must be updated as provided in paragraph (h)(6)(i)(C) of this section.

(C) If there is a change to the process or operation such that the previously measured values of Q_i, HAP_{im}, and C_{im} are no longer representative, a new performance test shall be conducted to determine new representative values of Q_i, HAP_{im}, and C_{im}. These new values shall be used to calculate debits and credits from the time of the change forward, and the new values shall be reported in the next Periodic Report.

(iii) The following equations shall be used to calculate $EWW1_{iACTUAL}$ for each Group 1 wastewater stream i that is correctly suppressed and is treated to a level more stringent than the reference control technology.

(A) If the Group 1 wastewater stream i is controlled using a treatment process or series of treatment processes with an approved nominal reduction efficiency for an individually speciated HAP that is greater than that specified in table 7 of this subpart, and the vapor control device achieves a percentage of reduction equal to 95 percent, the following equation shall be used:

$$EWW1_{iACTUAL} = \left(6.0*10^{-8}\right)Q_i H_i \sum_{m=1}^{s}\left[Fe_m HAP_{im}\left(1-PR_{im}\right)\right] + 0.05\left(6.0*10^{-8}\right)Q_i H_i \sum_{m=1}^{s}\left[HAP_{im} PR_{im}\right]$$

Where:

$EWW_{iACTUAL}$=Monthly wastewater stream emission rate if wastewater stream i is treated to a level more stringent than the reference control technology, megagrams per month.

PR_{im}=The efficiency of the treatment process, or series of treatment processes, that treat wastewater stream i in reducing the emission potential of organic HAP m in wastewater, dimensionless, as calculated by:

$$PR_{im} = \frac{HAP_{im\text{-}in} - HAP_{im\text{-}out}}{HAP_{im\text{-}in}}$$

Where:

$HAP_{im\text{-}in}$=Average concentration of organic HAP m, parts per million by weight, as defined and determined according to paragraph (h)(6)(ii)(A) of this section, in the wastewater entering the first treatment process in the series.

$HAP_{im\text{-}out}$=Average concentration of organic HAP m, parts per million by weight, as defined and determined according to paragraph (h)(6)(ii)(A) of this section, in the wastewater exiting the last treatment process in the series.

All other terms are as defined and determined in paragraph (h)(6)(ii) of this section.

(B) If the Group 1 wastewater stream i is not controlled using a treatment process or series of treatment processes with an approved nominal reduction efficiency for an individually speciated HAP that is greater than that specified in table 7 of this subpart, but the vapor control device has an approved nominal efficiency greater than 95 percent, the following equation shall be used:

$$EWW1_{iACTUAL} = \left(6.0*10^{-8}\right)Q_i H_i \sum_{m=1}^{s}\left[Fe_m HAP_{im}\left(1-A_m\right)\right] + \left(1-\frac{\text{Nominal efficiency \%}}{100}\right)\left(6.0*10^{-8}\right)Q_i H_i \sum_{m=1}^{s}\left[HAP_{im} A_m\right]$$

Where:

Nominal efficiency=Approved reduction efficiency of the vapor control device, dimensionless, as determined according to the procedures in §63.652(i).

A_m=The efficiency of the treatment process, or series of treatment processes, that treat wastewater stream i in reducing the emission potential of organic HAP m in wastewater, dimensionless.

All other terms are as defined and determined in paragraphs (h)(6)(ii) and (h)(6)(iii)(A) of this section.

(*1*) If a steam stripper meeting the specifications in the definition of reference control technology for wastewater is used, A_m shall be equal to the value of Fr_m given in table 7 of this subpart.

(*2*) If an alternative control device is used, the percentage of reduction must be determined using the equation and methods specified in paragraph (h)(6)(iii)(A) of this section for determining PR_{im}. If the value of PR_{im} is greater than or equal to the value of Fr_m given in table 7 of this subpart, then A_m equals Fr_m unless a higher nominal efficiency has been approved. If a higher nominal efficiency has been approved for the treatment process, the owner or operator shall determine $EWW1_{iACTUAL}$ according to paragraph (h)(6)(iii)(B) of this section rather than paragraph (h)(6)(iii)(A) of this section. If PR_{im} is less than the value of FR_m given in table 7 of this subpart, emissions averaging shall not be used for this emission point.

(C) If the Group 1 wastewater stream i is controlled using a treatment process or series of treatment processes with an approved nominal reduction efficiency for an individually speciated hazardous air pollutant that is greater than that specified in table 7 of this subpart, and the vapor control device has an approved nominal efficiency greater than 95 percent, the following equation shall be used:

$$EWW1_{iACTUAL} = \left(6.0*10^{-8}\right)Q_i H_i \sum_{m=1}^{s}\left[Fe_m HAP_{im}\left(1-PR_{im}\right)\right] + \left(1-\frac{\text{Nominal efficiency \%}}{100}\right)\left(6.0*10^{-8}\right)Q_i H_i \sum_{m=1}^{s}\left[HAP_{im} PR_{im}\right]$$

where all terms are as defined and determined in paragraphs (h)(6)(ii) and (h)(6)(iii)(A) of this section.

(iv) The following equation shall be used to calculate $EWW2_{iBASE}$ for each Group 2 wastewater stream i that on November 15, 1990 was not correctly suppressed or was correctly suppressed but not treated:

$$EWW2_{iBASE} = \left(6.0\times10^{-8}\right)Q_i H_i \sum_{m=1}^{s} Fe_m HAP_{im}$$

Where:

$EWW2_{iBASE}$=Monthly wastewater stream emission rate if wastewater stream i is not correctly suppressed, megagrams per month.

Q_i, H_i, s, Fe_m, and HAP_{im} are as defined and determined according to paragraphs (h)(6)(ii) and (h)(6)(iii)(A) of this section.

(v) The following equation shall be used to calculate $EWW2_{iBASE}$ for each Group 2 wastewater stream i on November 15, 1990 was correctly suppressed. $EWW2_{iBASE}$ shall be calculated as if the control methods being used on November 15, 1990 are in place and any control methods applied after November 15, 1990 are ignored. However, values for the parameters in the equation shall be representative of present production levels and stream properties.

$$EWW2_{iBASE} = \left(6.0*10^{-8}\right)Q_i H_i \sum_{m=1}^{s}\left[Fe_m HAP_{im}\left(1-PR_{im}\right)\right] + \left(1-\frac{R_i}{100\%}\right)\left(6.0*10^{-8}\right)Q_i H_i \sum_{m=1}^{s}\left[HAP_{im} PR_{im}\right]$$

where R_i is calculated according to paragraph (h)(6)(vii) of this section and all other terms are as defined and determined according to paragraphs (h)(6)(ii) and (h)(6)(iii)(A) of this section.

(vi) For Group 2 wastewater streams that are correctly suppressed, $EWW2_{iACTUAL}$ shall be calculated according to the equation for $EWW2_{iBASE}$ in paragraph (h)(6)(v) of this section. $EWW2_{iACTUAL}$ shall be calculated with all control methods in place accounted for.

(vii) The reduction efficiency, R_i, of the vapor control device shall be demonstrated according to the following procedures:

(A) Sampling sites shall be selected using Method 1 or 1A of 40 CFR part 60, appendix A, as appropriate.

(B) The mass flow rate of organic compounds entering and exiting the control device shall be determined as follows:

(*1*) The time period for the test shall not be less than 3 hours during which at least three runs are conducted.

(*2*) A run shall consist of a 1-hour period during the test. For each run:

(*i*) The volume exhausted shall be determined using Methods 2, 2A, 2C, or 2D of 40 CFR part 60 appendix A, as appropriate;

(*ii*) The organic concentration in the vent stream entering and exiting the control device shall be determined using Method 18 of 40 CFR part 60, appendix A. Alternatively, any other test method validated according to the procedures in Method 301 of appendix A of this part may be used.

(*3*) The mass flow rate of organic compounds entering and exiting the control device during each run shall be calculated as follows:

$$E_a = \frac{0.0416}{10^6 \times m}\left[\sum_{p=1}^{m} V_{ap}\left(\sum_{p=1}^{n} C_{aip} MW_i\right)\right]$$

$$E_b = \frac{0.0416}{10^6 \times m}\left[\sum_{p=1}^{m} V_{bp}\left(\sum_{p=1}^{n} C_{bip} MW_i\right)\right]$$

Where:

E_a=Mass flow rate of organic compounds exiting the control device, kilograms per hour.

E_b=Mass flow rate of organic compounds entering the control device, kilograms per hour.

V_{ap}=Average volumetric flow rate of vent stream exiting the control device during run p at standards conditions, cubic meters per hour.

V_{bp} = Average volumetric flow rate of vent stream entering the control device during run p at standards conditions, cubic meters per hour.

p = Run.

m = Number of runs.

C_{aip} = Concentration of organic compound i measured in the vent stream exiting the control device during run p as determined by Method 18 of 40 CFR part 60 appendix A, parts per million by volume on a dry basis.

C_{bip} = Concentration of organic compound i measured in the vent stream entering the control device during run p as determined by Method 18 of 40 CFR part 60, appendix A, parts per million by volume on a dry basis.

MW_i = Molecular weight of organic compound i in the vent stream, kilograms per kilogram-mole.

n = Number of organic compounds in the vent stream.

0.0416 = Conversion factor for molar volume, kilograms-mole per cubic meter at 293 kelvin and 760 millimeters mercury absolute.

(C) The organic reduction efficiency for the control device shall be calculated as follows:

$$R = \frac{E_b - E_a}{E_b} \times 100$$

Where:

R = Total organic reduction efficiency for the control device, percentage.

E_b = Mass flow rate of organic compounds entering the control device, kilograms per hour.

E_a = Mass flow rate of organic compounds exiting the control device, kilograms per hour.

(i) The following procedures shall be followed to establish nominal efficiencies. The procedures in paragraphs (i)(1) through (i)(6) of this section shall be followed for control technologies that are different in use or design from the reference control technologies and achieve greater percentages of reduction than the percentages of efficiency assigned to the reference control technologies in §63.641.

(1) In those cases where the owner or operator is seeking permission to take credit for use of a control technology that is different in use or design from the reference control technology, and the different control technology will be used in more than three applications at

a single plant site, the owner or operator shall submit the information specified in paragraphs (i)(1)(i) through (i)(1)(iv) of this section to the Administrator in writing:

(i) Emission stream characteristics of each emission point to which the control technology is or will be applied including the kind of emission point, flow, organic HAP concentration, and all other stream characteristics necessary to design the control technology or determine its performance;

(ii) Description of the control technology including design specifications;

(iii) Documentation demonstrating to the Administrator's satisfaction the control efficiency of the control technology. This may include performance test data collected using an appropriate EPA method or any other method validated according to Method 301 of appendix A of this part. If it is infeasible to obtain test data, documentation may include a design evaluation and calculations. The engineering basis of the calculation procedures and all inputs and assumptions made in the calculations shall be documented; and

(iv) A description of the parameter or parameters to be monitored to ensure that the control technology will be operated in conformance with its design and an explanation of the criteria used for selection of that parameter (or parameters).

(2) The Administrator shall determine within 120 calendar days whether an application presents sufficient information to determine nominal efficiency. The Administrator reserves the right to request specific data in addition to the items listed in paragraph (i)(1) of this section.

(3) The Administrator shall determine within 120 calendar days of the submittal of sufficient data whether a control technology shall have a nominal efficiency and the level of that nominal efficiency. If, in the Administrator's judgment, the control technology achieves a level of emission reduction greater than the reference control technology for a particular kind of emission point, the Administrator will publish a FEDERAL REGISTER notice establishing a nominal efficiency for the control technology.

(4) The Administrator may grant conditional permission to take emission credits for use of the control technology on requirements that may be necessary to ensure operation and maintenance to achieve the specified nominal efficiency.

(5) In those cases where the owner or operator is seeking permission to take credit for use of a control technology that is different in use or design from the reference control technology and the different control technology will be used in no more than three applications at a single plant site, the information listed in paragraphs (i)(1)(i) through (i)(1)(iv) of this section can be submitted to the permitting authority for the source for approval instead of the Administrator.

(i) In these instances, use and conditions for use of the control technology can be approved by the permitting authority. The permitting authority shall follow the procedures specified in paragraphs (i)(2) through (i)(4) of this section except that, in these instances, a FEDERAL REGISTER notice is not required to establish the nominal efficiency for the different technology.

(ii) If, in reviewing the submittal, the permitting authority believes the control technology has broad applicability for use by other sources, the permitting authority shall submit the information provided in the application to the Director of the EPA Office of Air Quality Planning and Standards. The Administrator shall review the technology for broad applicability and may publish a FEDERAL REGISTER notice; however, this review shall not affect the permitting authority's approval of the nominal efficiency of the control technology for the specific application.

(6) If, in reviewing an application for a control technology for an emission point, the Administrator or permitting authority determines the control technology is not different in use or design from the reference control technology, the Administrator or permitting authority shall deny the application.

(j) The following procedures shall be used for calculating the efficiency (percentage of reduction) of pollution prevention measures:

(1) A pollution prevention measure is any practice that meets the criteria of

paragraphs (j)(1)(i) and (j)(1)(ii) of this section.

(i) A pollution prevention measure is any practice that results in a lesser quantity of organic HAP emissions per unit of product released to the atmosphere prior to out-of-process recycling, treatment, or control of emissions while the same product is produced.

(ii) Pollution prevention measures may include: Substitution of feedstocks that reduce HAP emissions, alterations to the production process to reduce the volume of materials released to the environment, equipment modifications; housekeeping measures, and in-process recycling that returns waste materials directly to production as raw materials. Production cutbacks do not qualify as pollution prevention.

(2) The emission reduction efficiency of pollution prevention measures implemented after November 15, 1990 can be used in calculating the actual emissions from an emission point in the debit and credit equations in paragraphs (g) and (h) of this section.

(i) For pollution prevention measures, the percentage of reduction used in the equations in paragraphs (g)(2) and (g)(3) of this section and paragraphs (h)(2) through (h)(4) of this section is the difference in percentage between the monthly organic HAP emissions for each emission point after the pollution prevention measure for the most recent month versus monthly emissions from the same emission point before the pollution prevention measure, adjusted by the volume of product produced during the two monthly periods.

(ii) The following equation shall be used to calculate the percentage of reduction of a pollution prevention measure for each emission point.

$$\text{Percent reduction} = \frac{E_B - \dfrac{\left(E_{pp} \times P_B\right)}{P_{pp}}}{E_B} \times 100\%$$

Where:

Percent reduction=Efficiency of pollution prevention measure (percentage of organic HAP reduction).

E_B=Monthly emissions before the pollution prevention measure, megagrams per month, determined as specified in paragraphs (j)(2)(ii)(A), (j)(2)(ii)(B), and (j)(2)(ii)(C) of this section.

E_{pp}=Monthly emissions after the pollution prevention measure, megagrams per month, as determined for the most recent month, determined as specified in paragraphs (j)(2)(ii)(D) or (j)(2)(ii)(E) of this section.

P_B=Monthly production before the pollution prevention measure, megagrams per month, during the same period over which E_B is calculated.

P_{pp}=Monthly production after the pollution prevention measure, megagrams per month, as determined for the most recent month.

(A) The monthly emissions before the pollution prevention measure, E_B, shall be determined in a manner consistent with the equations and procedures in paragraphs (g)(2), (g)(3), (g)(4), and (g)(5) of this section for miscellaneous process vents, storage vessels, gasoline loading racks, and marine tank vessels.

(B) For wastewater, E_B shall be calculated as follows:

$$E_B = \sum_{i=1}^{n} \left[\left(6.0 * 10^{-8}\right) Q_{Bi} \, H_{Bi} \sum_{m=1}^{s} Fe_m HAP_{Bim} \right]$$

where:

n=Number of wastewater streams.

Q_{Bi}=Average flow rate for wastewater stream i before the pollution prevention measure, liters per minute.

H_{Bi}=Number of hours per month that wastewater stream i was discharged before the pollution prevention measure, hours per month.

s=Total number of organic HAP's in wastewater stream i.

Fe_m=Fraction emitted of organic HAP m in wastewater from table 7 of this subpart, dimensionless.

HAP_{Bim}=Average concentration of organic HAP m in wastewater stream i, defined and determined according to paragraph (h)(6)(ii)(A)(*2*) of this section, before the pollution prevention measure, parts per million by weight, as measured before the implementation of the pollution measure.

(C) If the pollution prevention measure was implemented prior to July 14, 1994, records may be used to determine E_B.

(D) The monthly emissions after the pollution prevention measure, E_{pp}, may be determined during a performance test or by a design evaluation and documented engineering calculations. Once an emissions-to-production ratio has been established, the ratio can be used to estimate monthly emissions from monthly production records.

(E) For wastewater, E_{pp} shall be calculated using the following equation:

$$E_{pp} = \sum_{i=1}^{n} \left[\left(6.0*10^{-8}\right) Q_{ppi} H_{ppi} \sum_{m=1}^{s} Fe_m HAP_{ppim} \right]$$

where n, Q, H, s, Fe_m, and HAP are defined and determined as described in paragraph (j)(2)(ii)(B) of this section except that Q_{ppi}, H_{ppi}, and HAP_{ppim} shall be determined after the pollution prevention measure has been implemented.

(iii) All equations, calculations, test procedures, test results, and other information used to determine the percentage of reduction achieved by a pollution prevention measure for each emission point shall be fully documented.

(iv) The same pollution prevention measure may reduce emissions from multiple emission points. In such cases, the percentage of reduction in emissions for each emission point must be calculated.

(v) For the purposes of the equations in paragraphs (h)(2) through (h)(6) of this section used to calculate credits for emission points controlled more stringently than the reference control technology, the nominal efficiency of a pollution prevention measure is equivalent to the percentage of reduction of the pollution prevention measure. When a pollution prevention measure is used, the owner or operator of a source is not required to apply to the Administrator for a nominal efficiency and is not subject to paragraph (i) of this section.

(k) The owner or operator shall demonstrate that the emissions from the emission points proposed to be included in the average will not result in greater hazard or, at the option of the State or local permitting authority, greater risk to human health or the environment than if the emission points were controlled according to the provisions in §§ 63.643 through 63.647, and §§ 63.650 and 63.651.

(1) This demonstration of hazard or risk equivalency shall be made to the satisfaction of the State or local permitting authority.

(i) The State or local permitting authority may require owners and operators to use specific methodologies and procedures for making a hazard or risk determination.

(ii) The demonstration and approval of hazard or risk equivalency may be made according to any guidance that the EPA makes available for use.

(2) Owners and operators shall provide documentation demonstrating the hazard or risk equivalency of their proposed emissions average in their Implementation Plan.

(3) An emissions averaging plan that does not demonstrate an equivalent or lower hazard or risk to the satisfaction

of the State or local permitting authority shall not be approved. The State or local permitting authority may require such adjustments to the emissions averaging plan as are necessary in order to ensure that the average will not result in greater hazard or risk to human health or the environment than would result if the emission points were controlled according to §§63.643 through 63.647, and §§63.650 and 63.651.

(4) A hazard or risk equivalency demonstration shall:

(i) Be a quantitative, bona fide chemical hazard or risk assessment;

(ii) Account for differences in chemical hazard or risk to human health or the environment; and

(iii) Meet any requirements set by the State or local permitting authority for such demonstrations.

(l) For periods of excess emissions, an owner or operator may request that the provisions of paragraphs (l)(1) through (l)(4) of this section be followed instead of the procedures in paragraphs (f)(3)(i) and (f)(3)(ii) of this section.

(1) The owner or operator shall notify the Administrator of excess emissions in the Periodic Reports as required in §63.654(g)(6).

(2) The owner or operator shall demonstrate that other types of monitoring data or engineering calculations are appropriate to establish that the control device for the emission point was operating in such a fashion to warrant assigning full or partial credits and debits. This demonstration shall be made to the Administrator's satisfaction, and the Administrator may establish procedures for demonstrating compliance that are acceptable.

(3) The owner or operator shall provide documentation of the period of excess emissions and the other type of monitoring data or engineering calculations to be used to demonstrate that the control device for the emission point was operating in such a fashion to warrant assigning full or partial credits and debits.

(4) The Administrator may assign full or partial credit and debits upon review of the information provided.

[60 FR 43260, Aug. 18, 1995; 60 FR 49976, Sept. 27, 1995; 61 FR 7051, Feb. 23, 1996, as amended at 61 FR 29881, June 12, 1996; 61 FR 33799, June 28, 1996]

§63.653 Monitoring, recordkeeping, and implementation plan for emissions averaging.

(a) For each emission point included in an emissions average, the owner or operator shall perform testing, monitoring, recordkeeping, and reporting equivalent to that required for Group 1 emission points complying with §§63.643 through 63.647, and §§63.650 and 63.651. The specific requirements for miscellaneous process vents, storage vessels, wastewater, gasoline loading racks, and marine tank vessels are identified in paragraphs (a)(1) through (a)(7) of this section.

(1) The source shall implement the following testing, monitoring, recordkeeping, and reporting procedures for each miscellaneous process vent equipped with a flare, incinerator, boiler, or process heater:

(i) Conduct initial performance tests to determine the percentage of reduction as specified in §63.645 of this subpart and §63.116 of subpart G; and

(ii) Monitor the operating parameters specified in §63.644, as appropriate for the specific control device.

(2) The source shall implement the following procedures for each miscellaneous process vent, equipped with a carbon adsorber, absorber, or condenser but not equipped with a control device:

(i) Determine the flow rate and organic HAP concentration using the methods specified in §63.115 (a)(1) and (a)(2), §63.115 (b)(1) and (b)(2), and §63.115(c)(3) of subpart G; and

(ii) Monitor the operating parameters specified in §63.114 of subpart G, as appropriate for the specific recovery device.

(3) The source shall implement the following procedures for each storage vessel controlled with an internal floating roof, external roof, or a closed vent system with a control device, as appropriate to the control technique:

(i) Perform the monitoring or inspection procedures in § 63.646 of this subpart and § 63.120 of subpart G; and

(ii) For closed vent systems with control devices, conduct an initial design evaluation as specified in § 63.646 of this subpart and § 63.120(d) of subpart G.

(4) For each gasoline loading rack that is controlled, perform the testing and monitoring procedures specified in §§ 63.425 and 63.427 of subpart R of this part except § 63.425(d) or § 63.427(c).

(5) For each marine tank vessel that is controlled, perform the compliance, monitoring, and performance testing, procedures specified in §§ 63.563, 63.564, and 63.565 of subpart Y of this part.

(6) The source shall implement the following procedures for wastewater emission points, as appropriate to the control techniques:

(i) For wastewater treatment processes, conduct tests as specified in § 61.355 of subpart FF of part 60;

(ii) Conduct inspections and monitoring as specified in §§ 61.343 through 61.349 and § 61.354 of 40 CFR part 61, subpart FF.

(7) If an emission point in an emissions average is controlled using a pollution prevention measure or a device or technique for which no monitoring parameters or inspection procedures are specified in §§ 63.643 through 63.647 and §§ 63.650 and 63.651, the owner or operator shall establish a site-specific monitoring parameter and shall submit the information specified in § 63.654(h)(4) in the Implementation Plan.

(b) Records of all information required to calculate emission debits and credits and records required by § 63.654 shall be retained for 5 years.

(c) Notifications of Compliance Status report, Periodic Reports, and other reports shall be submitted as required by § 63.654.

(d) Each owner or operator of an existing source who elects to comply with § 63.654 (g) and (h) by using emissions averaging for any emission points shall submit an Implementation Plan.

(1) The Implementation Plan shall be submitted to the Administrator and approved prior to implementing emissions averaging. This information may be submitted in an operating permit application, in an amendment to an operating permit application, in a separate submittal, in a Notification of Compliance Status Report, in a Periodic Report or in any combination of these documents. If an owner or operator submits the information specified in paragraph (d)(2) of this section at different times, and/or in different submittals, later submittals may refer to earlier submittals instead of duplicating the previously submitted information.

(2) The Implementation Plan shall include the information specified in paragraphs (d)(2)(i) through (d)(2)(ix) of this section for all points included in the average.

(i) The identification of all emission points in the planned emissions average and notation of whether each emission point is a Group 1 or Group 2 emission point as defined in § 63.641.

(ii) The projected annual emission debits and credits for each emission point and the sum for the emission points involved in the average calculated according to § 63.652. The annual projected credits must be greater than the projected debits, as required under § 63.652(e)(3).

(iii) The specific control technology or pollution prevention measure that will be used for each emission point included in the average and date of application or expected date of application.

(iv) The specific identification of each emission point affected by a pollution prevention measure. To be considered a pollution prevention measure, the criteria in § 63.652(j)(1) must be met. If the same pollution prevention measure reduces or eliminates emissions from multiple emission points in the average, the owner or operator must identify each of these emission points.

(v) A statement that the compliance demonstration, monitoring, inspection, recordkeeping, and reporting provisions in paragraphs (a), (b), and (c) of this section that are applicable to each emission point in the emissions average will be implemented beginning on the date of compliance.

(vi) Documentation of the information listed in paragraphs (d)(2)(vi)(A) through (d)(2)(vi)(D) of this section for each emission point included in the average.

(A) The values of the parameters used to determine whether each emission point in the emissions average is Group 1 or Group 2.

(B) The estimated values of all parameters needed for input to the emission debit and credit calculations in § 63.652 (g) and (h). These parameter values or, as appropriate, limited ranges for the parameter values, shall be specified in the source's Implementation Plan as enforceable operating conditions. Changes to these parameters must be reported in the next Periodic Report.

(C) The estimated percentage of reduction if a control technology achieving a lower percentage of reduction than the efficiency of the reference control technology, as defined in § 63.641, is or will be applied to the emission point.

(D) The anticipated nominal efficiency if a control technology achieving a greater percentage emission reduction than the efficiency of the reference control technology is or will be applied to the emission point. The procedures in § 63.652(i) shall be followed to apply for a nominal efficiency.

(vii) The information specified in § 63.654(h)(4) for:

(A) Each miscellaneous process vent controlled by a pollution prevention measure or control technique for which monitoring parameters or inspection procedures are not specified in paragraphs (a)(1) or (a)(2) of this section; and

(B) Each storage vessel controlled by a pollution prevention measure or a control technique other than an internal or external floating roof or a closed vent system with a control device.

(viii) Documentation of the information listed in paragraphs (d)(2)(viii)(A) through (d)(2)(viii)(G) of this section for each process wastewater stream included in the average.

(A) The information used to determine whether the wastewater stream is a Group 1 or Group 2 wastewater stream.

(B) The estimated values of all parameters needed for input to the wastewater emission credit and debit calculations in § 63.652(h)(6).

(C) The estimated percentage of reduction if the wastewater stream is or will be controlled using a treatment process or series of treatment processes that achieves an emission reduction less than or equal to the emission reduction specified in table 7 of this subpart.

(D) The estimated percentage of reduction if a control technology achieving less than or equal to 95 percent emission reduction is or will be applied to the vapor stream(s) vented and collected from the treatment processes.

(E) The estimated percentage of reduction if a pollution prevention measure is or will be applied.

(F) The anticipated nominal efficiency if the owner or operator plans to apply for a nominal efficiency under § 63.652(i). A nominal efficiency shall be applied for if:

(*1*) A control technology is or will be applied to the wastewater stream and achieves an emission reduction greater than the emission reduction specified in table 7 of this subpart; or

(*2*) A control technology achieving greater than 95 percent emission reduction is or will be applied to the vapor stream(s) vented and collected from the treatment processes.

(G) For each pollution prevention measure, treatment process, or control device used to reduce air emissions of organic HAP's from wastewater and for which no monitoring parameters or inspection procedures are specified in § 63.647, the information specified in § 63.654(h)(4) shall be included in the Implementation Plan.

(ix) Documentation required in § 63.652(k) demonstrating the hazard or risk equivalency of the proposed emissions average.

(3) The Administrator shall determine within 120 calendar days whether the Implementation Plan submitted presents sufficient information. The Administrator shall either approve the Implementation Plan, request changes, or request that the owner or operator submit additional information. Once the Administrator receives sufficient information, the Administrator shall approve, disapprove, or request changes to the plan within 120 calendar days.

[60 FR 43260, Aug. 18, 1995, as amended at 61 FR 29881, June 12, 1996; 63 FR 31361, June 9, 1998]

§ 63.654 Reporting and recordkeeping requirements.

(a) Each owner or operator subject to the wastewater provisions in § 63.647 shall comply with the recordkeeping and reporting provisions in §§ 61.356 and 61.357 of 40 CFR part 61, subpart FF unless they are complying with the wastewater provisions specified in paragraph (o)(2)(ii) of § 63.640. There are no additional reporting and recordkeeping requirements for wastewater under this subpart unless a wastewater stream is included in an emissions average. Recordkeeping and reporting for emissions averages are specified in § 63.653 and in paragraphs (f)(5) and (g)(8) of this section.

(b) Each owner or operator subject to the gasoline loading rack provisions in § 63.650 shall comply with the recordkeeping and reporting provisions in § 63.428 (b) and (c), (g)(1), and (h)(1) through (h)(3) of subpart R of this part. These requirements are summarized in table 4 of this subpart. There are no additional reporting and recordkeeping requirements for gasoline loading racks under this subpart unless a loading rack is included in an emissions average. Recordkeeping and reporting for emissions averages are specified in § 63.653 and in paragraphs (f)(5) and (g)(8) of this section.

(c) Each owner or operator subject to the marine tank vessel loading operation standards in § 63.651 shall comply with the recordkeeping and reporting provisions in §§ 63.566 and 63.567(a) and § 63.567 (c) through (i) of subpart Y of this part. These requirements are summarized in table 5 of this subpart. There are no additional reporting and recordkeeping requirements for marine tank vessel loading operations under this subpart unless marine tank vessel loading operations are included in an emissions average. Recordkeeping and reporting for emissions averages are specified in § 63.653 and in paragraphs (f)(5) and (g)(8) of this section.

(d) Each owner or operator subject to the equipment leaks standards in § 63.648 shall comply with the recordkeeping and reporting provisions in paragraphs (d)(1) through (d)(6) of this section.

(1) Sections 60.486 and 60.487 of subpart VV of part 60 except as specified in paragraph (d)(1)(i) of this section; or §§ 63.181 and 63.182 of subpart H of this part except for §§ 63.182(b), (c)(2), and (c)(4).

(i) The signature of the owner or operator (or designate) whose decision it was that a repair could not be effected without a process shutdown is not required to be recorded. Instead, the name of the person whose decision it was that a repair could not be effected without a process shutdown shall be recorded and retained for 2 years.

(ii) [Reserved]

(2) The Notification of Compliance Status report required by § 63.182(c) of subpart H and the initial semiannual report required by § 60.487(b) of 40 CFR part 60, subpart VV shall be submitted within 150 days of the compliance date specified in § 63.640(h); the requirements of subpart H of this part are summarized in table 3 of this subpart.

(3) An owner or operator who determines that a compressor qualifies for the hydrogen service exemption in § 63.648 shall also keep a record of the demonstration required by § 63.648.

(4) An owner or operator must keep a list of identification numbers for valves that are designated as leakless per § 63.648(c)(10).

(5) An owner or operator must identify, either by list or location (area or refining process unit), equipment in organic HAP service less than 300 hours per year within refining process units subject to this subpart.

(6) An owner or operator must keep a list of reciprocating pumps and compressors determined to be exempt from seal requirements as per §§ 63.648 (f) and (i).

(e) Each owner or operator of a source subject to this subpart shall submit the reports listed in paragraphs (e)(1) through (e)(3) of this section except as provided in paragraph (h)(5) of this section, and shall keep records as described in paragraph (i) of this section.

(1) A Notification of Compliance Status report as described in paragraph (f) of this section;

(2) Periodic Reports as described in paragraph (g) of this section; and

(3) Other reports as described in paragraph (h) of this section.

(f) Each owner or operator of a source subject to this subpart shall submit a Notification of Compliance Status report within 150 days after the compliance dates specified in §63.640(h) with the exception of Notification of Compliance Status reports submitted to comply with §63.640(l)(3) and for storage vessels subject to the compliance schedule specified in §63.640(h)(4). Notification of Compliance Status reports required by §63.640(l)(3) and for storage vessels subject to the compliance dates specified in §63.640(h)(4) shall be submitted according to paragraph (f)(6) of this section. This information may be submitted in an operating permit application, in an amendment to an operating permit application, in a separate submittal, or in any combination of the three. If the required information has been submitted before the date 150 days after the compliance date specified in §63.640(h), a separate Notification of Compliance Status report is not required within 150 days after the compliance dates specified in §63.640(h). If an owner or operator submits the information specified in paragraphs (f)(1) through (f)(5) of this section at different times, and/or in different submittals, later submittals may refer to earlier submittals instead of duplicating and resubmitting the previously submitted information. Each owner or operator of a gasoline loading rack classified under Standard Industrial Classification Code 2911 located within a contiguous area and under common control with a petroleum refinery subject to the standards of this subpart shall submit the Notification of Compliance Status report required by subpart R of this part within 150 days after the compliance dates specified in §63.640(h) of this subpart.

(1) The Notification of Compliance Status report shall include the information specified in paragraphs (f)(1)(i) through (f)(1)(v) of this section.

(i) For storage vessels, this report shall include the information specified in paragraphs (f)(1)(i)(A) through (f)(1)(i)(D) of this section.

(A) Identification of each storage vessel subject to this subpart, and for each Group 1 storage vessel subject to this subpart, the information specified in paragraphs (f)(1)(i)(A)(*1*) through (f)(1)(i)(A)(*3*) of this section. This information is to be revised each time a Notification of Compliance Status report is submitted for a storage vessel subject to the compliance schedule specified in §63.640(h)(4) or to comply with §63.640(l)(3).

(*1*) For each Group 1 storage vessel complying with §63.646 that is not included in an emissions average, the method of compliance (i.e., internal floating roof, external floating roof, or closed vent system and control device).

(*2*) For storage vessels subject to the compliance schedule specified in §63.640(h)(4) that are not complying with §63.646, the anticipated compliance date.

(*3*) For storage vessels subject to the compliance schedule specified in §63.640(h)(4) that are complying with §63.646 and the Group 1 storage vessels described in §63.640(l), the actual compliance date.

(B) If a closed vent system and a control device other than a flare is used to comply with §63.646 the owner or operator shall submit:

(*1*) A description of the parameter or parameters to be monitored to ensure that the control device is being properly operated and maintained, an explanation of the criteria used for selection of that parameter (or parameters), and the frequency with which monitoring will be performed; and either

(*2*) The design evaluation documentation specified in §63.120(d)(1)(i) of subpart G, if the owner or operator elects to prepare a design evaluation; or

(*3*) If the owner or operator elects to submit the results of a performance test, identification of the storage vessel and control device for which the performance test will be submitted, and identification of the emission point(s) that share the control device with the storage vessel and for which the performance test will be conducted.

(C) If a closed vent system and control device other than a flare is used, the owner or operator shall submit:

(*1*) The operating range for each monitoring parameter. The specified operating range shall represent the conditions for which the control device is being properly operated and maintained.

(2) If a performance test is conducted instead of a design evaluation, results of the performance test demonstrating that the control device achieves greater than or equal to the required control efficiency. A performance test conducted prior to the compliance date of this subpart can be used to comply with this requirement, provided that the test was conducted using EPA methods and that the test conditions are representative of current operating practices.

(D) If a closed vent system and a flare is used, the owner or operator shall submit:

(1) Flare design (e.g., steam-assisted, air-assisted, or nonassisted);

(2) All visible emission readings, heat content determinations, flow rate measurements, and exit velocity determinations made during the compliance determination required by § 63.120(e) of subpart G of this part; and

(3) All periods during the compliance determination when the pilot flame is absent.

(ii) For miscellaneous process vents, identification of each miscellaneous process vent subject to this subpart, whether the process vent is Group 1 or Group 2, and the method of compliance for each Group 1 miscellaneous process vent that is not included in an emissions average (e.g., use of a flare or other control device meeting the requirements of § 63.643(a)).

(iii) For miscellaneous process vents controlled by control devices required to be tested under § 63.645 of this subpart and § 63.116(c) of subpart G of this part, performance test results including the information in paragraphs (f)(1)(iii)(A) and (B) of this section. Results of a performance test conducted prior to the compliance date of this subpart can be used provided that the test was conducted using the methods specified in § 63.645 and that the test conditions are representative of current operating conditions.

(A) The percentage of reduction of organic HAP's or TOC, or the outlet concentration of organic HAP's or TOC (parts per million by volume on a dry basis corrected to 3 percent oxygen), determined as specified in § 63.116(c) of subpart G of this part; and

(B) The value of the monitored parameters specified in table 10 of this subpart, or a site-specific parameter approved by the permitting authority, averaged over the full period of the performance test,

(iv) For miscellaneous process vents controlled by flares, performance test results including the information in paragraphs (f)(1)(iv)(A) and (B) of this section;

(A) All visible emission readings, heat content determinations, flow rate measurements, and exit velocity determinations made during the compliance determination required by § 63.645 of this subpart and § 63.116(a) of subpart G of this part, and

(B) A statement of whether a flame was present at the pilot light over the full period of the compliance determination.

(v) For equipment leaks complying with § 63.648(c) (i.e., complying with the requirements of subpart H of this part), the Notification of Compliance Report Status report information required by § 63.182(c) of subpart H and whether the percentage of leaking valves will be reported on a process unit basis or a sourcewide basis.

(2) If initial performance tests are required by §§ 63.643 through 63.653 of this subpart, the Notification of Compliance Status report shall include one complete test report for each test method used for a particular source.

(i) For additional tests performed using the same method, the results specified in paragraph (f)(1) of this section shall be submitted, but a complete test report is not required.

(ii) A complete test report shall include a sampling site description, description of sampling and analysis procedures and any modifications to standard procedures, quality assurance procedures, record of operating conditions during the test, record of preparation of standards, record of calibrations, raw data sheets for field sampling, raw data sheets for field and laboratory analyses, documentation of calculations, and any other information required by the test method.

(iii) Performance tests are required only if specified by §§ 63.643 through 63.653 of this subpart. Initial performance tests are required for some kinds

of emission points and controls. Periodic testing of the same emission point is not required.

(3) For each monitored parameter for which a range is required to be established under § 63.120(d) of subpart G of this part for storage vessels or § 63.644 for miscellaneous process vents, the Notification of Compliance Status report shall include the information in paragraphs (f)(3)(i) through (f)(3)(iii) of this section.

(i) The specific range of the monitored parameter(s) for each emission point;

(ii) The rationale for the specific range for each parameter for each emission point, including any data and calculations used to develop the range and a description of why the range ensures compliance with the emission standard.

(A) If a performance test is required by this subpart for a control device, the range shall be based on the parameter values measured during the performance test supplemented by engineering assessments and manufacturer's recommendations. Performance testing is not required to be conducted over the entire range of permitted parameter values.

(B) If a performance test is not required by this subpart for a control device, the range may be based solely on engineering assessments and manufacturers' recommendations.

(iii) A definition of the source's operating day for purposes of determining daily average values of monitored parameters. The definition shall specify the times at which an operating day begins and ends.

(4) Results of any continuous monitoring system performance evaluations shall be included in the Notification of Compliance Status report.

(5) For emission points included in an emissions average, the Notification of Compliance Status report shall include the values of the parameters needed for input to the emission credit and debit equations in § 63.652(g) and (h), calculated or measured according to the procedures in § 63.652(g) and (h), and the resulting credits and debits for the first quarter of the year. The first quarter begins on the compliance date specified in § 63.640.

(6) Notification of Compliance Status reports required by § 63.640(l)(3) and for storage vessels subject to the compliance dates specified in § 63.640(h)(4) shall be submitted no later than 60 days after the end of the 6-month period during which the change or addition was made that resulted in the Group 1 emission point or the existing Group 1 storage vessel was brought into compliance, and may be combined with the periodic report. Six-month periods shall be the same 6-month periods specified in paragraph (g) of this section. The Notification of Compliance Status report shall include the information specified in paragraphs (f)(1) through (f)(5) of this section. This information may be submitted in an operating permit application, in an amendment to an operating permit application, in a separate submittal, as part of the periodic report, or in any combination of these four. If the required information has been submitted before the date 60 days after the end of the 6-month period in which the addition of the Group 1 emission point took place, a separate Notification of Compliance Status report is not required within 60 days after the end of the 6-month period. If an owner or operator submits the information specified in paragraphs (f)(1) through (f)(5) of this section at different times, and/or in different submittals, later submittals may refer to earlier submittals instead of duplicating and resubmitting the previously submitted information.

(g) The owner or operator of a source subject to this subpart shall submit Periodic Reports no later than 60 days after the end of each 6-month period when any of the compliance exceptions specified in paragraphs (g)(1) through (g)(6) of this section occur. The first 6-month period shall begin on the date the Notification of Compliance Status report is required to be submitted. A Periodic Report is not required if none of the compliance exceptions specified in paragraphs (g)(1) through (g)(6) of this section occurred during the 6-month period unless emissions averaging is utilized. Quarterly reports must be submitted for emission points included in emissions averages, as provided in paragraph (g)(8) of this section. An owner or operator may submit

reports required by other regulations in place of or as part of the Periodic Report required by this paragraph if the reports contain the information required by paragraphs (g)(1) through (g)(8) of this section.

(1) For storage vessels, Periodic Reports shall include the information specified for Periodic Reports in paragraph (g)(2) through (g)(5) of this section except that information related to gaskets, slotted membranes, and sleeve seals is not required for storage vessels that are part of an existing source.

(2) An owner or operator who elects to comply with § 63.646 by using a fixed roof and an internal floating roof or by using an external floating roof converted to an internal floating roof shall submit the results of each inspection conducted in accordance with § 63.120(a) of subpart G of this part in which a failure is detected in the control equipment.

(i) For vessels for which annual inspections are required under § 63.120(a)(2)(i) or (a)(3)(ii) of subpart G of this part, the specifications and requirements listed in paragraphs (g)(2)(i)(A) through (g)(2)(i)(C) of this section apply.

(A) A failure is defined as any time in which the internal floating roof is not resting on the surface of the liquid inside the storage vessel and is not resting on the leg supports; or there is liquid on the floating roof; or the seal is detached from the internal floating roof; or there are holes, tears, or other openings in the seal or seal fabric; or there are visible gaps between the seal and the wall of the storage vessel.

(B) Except as provided in paragraph (g)(2)(i)(C) of this section, each Periodic Report shall include the date of the inspection, identification of each storage vessel in which a failure was detected, and a description of the failure. The Periodic Report shall also describe the nature of and date the repair was made or the date the storage vessel was emptied.

(C) If an extension is utilized in accordance with § 63.120(a)(4) of subpart G of this part, the owner or operator shall, in the next Periodic Report, identify the vessel; include the documentation specified in § 63.120(a)(4) of subpart G of this part; and describe the date the storage vessel was emptied and the nature of and date the repair was made.

(ii) For vessels for which inspections are required under § 63.120(a)(2)(ii), (a)(3)(i), or (a)(3)(iii) of subpart G of this part (i.e., internal inspections), the specifications and requirements listed in paragraphs (g)(2)(ii)(A) and (g)(2)(ii)(B) of this section apply.

(A) A failure is defined as any time in which the internal floating roof has defects; or the primary seal has holes, tears, or other openings in the seal or the seal fabric; or the secondary seal (if one has been installed) has holes, tears, or other openings in the seal or the seal fabric; or, for a storage vessel that is part of a new source, the gaskets no longer close off the liquid surface from the atmosphere; or, for a storage vessel that is part of a new source, the slotted membrane has more than a 10 percent open area.

(B) Each Periodic Report shall include the date of the inspection, identification of each storage vessel in which a failure was detected, and a description of the failure. The Periodic Report shall also describe the nature of and date the repair was made.

(3) An owner or operator who elects to comply with § 63.646 by using an external floating roof shall meet the periodic reporting requirements specified in paragraphs (g)(3)(i) through (g)(3)(iii) of this section.

(i) The owner or operator shall submit, as part of the Periodic Report, documentation of the results of each seal gap measurement made in accordance with § 63.120(b) of subpart G of this part in which the seal and seal gap requirements of § 63.120(b)(3), (b)(4), (b)(5), or (b)(6) of subpart G of this part are not met. This documentation shall include the information specified in paragraphs (g)(3)(i)(A) through (g)(3)(i)(D) of this section.

(A) The date of the seal gap measurement.

(B) The raw data obtained in the seal gap measurement and the calculations described in § 63.120(b)(3) and (b)(4) of subpart G of this part.

(C) A description of any seal condition specified in § 63.120(b)(5) or (b)(6) of subpart G of this part that is not met.

(D) A description of the nature of and date the repair was made, or the date the storage vessel was emptied.

(ii) If an extension is utilized in accordance with §63.120(b)(7)(ii) or (b)(8) of subpart G of this part, the owner or operator shall, in the next Periodic Report, identify the vessel; include the documentation specified in §63.120(b)(7)(ii) or (b)(8) of subpart G of this part, as applicable; and describe the date the vessel was emptied and the nature of and date the repair was made.

(iii) The owner or operator shall submit, as part of the Periodic Report, documentation of any failures that are identified during visual inspections required by §63.120(b)(10) of subpart G of this part. This documentation shall meet the specifications and requirements in paragraphs (g)(3)(iii)(A) and (g)(3)(iii)(B) of this section.

(A) A failure is defined as any time in which the external floating roof has defects; or the primary seal has holes or other openings in the seal or the seal fabric; or the secondary seal has holes, tears, or other openings in the seal or the seal fabric; or, for a storage vessel that is part of a new source, the gaskets no longer close off the liquid surface from the atmosphere; or, for a storage vessel that is part of a new source, the slotted membrane has more than 10 percent open area.

(B) Each Periodic Report shall include the date of the inspection, identification of each storage vessel in which a failure was detected, and a description of the failure. The Periodic Report shall also describe the nature of and date the repair was made.

(4) An owner or operator who elects to comply with §63.646 by using an external floating roof converted to an internal floating roof shall comply with the periodic reporting requirements of paragraph (g)(2) of this section.

(5) An owner or operator who elects to comply with §63.646 by installing a closed vent system and control device shall submit, as part of the next Periodic Report, the information specified in paragraphs (g)(5)(i) through (g)(5)(iii) of this section.

(i) The Periodic Report shall include the information specified in paragraphs (g)(5)(i)(A) and (g)(5)(i)(B) of this section for those planned routine maintenance operations that would require the control device not to meet the requirements of §63.119(e)(1) or (e)(2) of subpart G of this part, as applicable.

(A) A description of the planned routine maintenance that is anticipated to be performed for the control device during the next 6 months. This description shall include the type of maintenance necessary, planned frequency of maintenance, and lengths of maintenance periods.

(B) A description of the planned routine maintenance that was performed for the control device during the previous 6 months. This description shall include the type of maintenance performed and the total number of hours during those 6 months that the control device did not meet the requirements of §63.119 (e)(1) or (e)(2) of subpart G of this part, as applicable, due to planned routine maintenance.

(ii) If a control device other than a flare is used, the Periodic Report shall describe each occurrence when the monitored parameters were outside of the parameter ranges documented in the Notification of Compliance Status report. The description shall include: Identification of the control device for which the measured parameters were outside of the established ranges, and causes for the measured parameters to be outside of the established ranges.

(iii) If a flare is used, the Periodic Report shall describe each occurrence when the flare does not meet the general control device requirements specified in §63.11(b) of subpart A of this part and shall include: Identification of the flare that does not meet the general requirements specified in §63.11(b) of subpart A of this part, and reasons the flare did not meet the general requirements specified in §63.11(b) of subpart A of this part.

(6) For miscellaneous process vents for which continuous parameter monitors are required by this subpart, periods of excess emissions shall be identified in the Periodic Reports and shall be used to determine compliance with the emission standards.

(i) Period of excess emission means any of the following conditions:

(A) An operating day when the daily average value of a monitored parameter, except presence of a flare pilot flame, is outside the range specified in the Notification of Compliance Status report. Monitoring data recorded during periods of monitoring system breakdown, repairs, calibration checks and zero (low-level) and high-level adjustments shall not be used in computing daily average values of monitored parameters.

(B) An operating day when all pilot flames of a flare are absent.

(C) An operating day when monitoring data required to be recorded in paragraphs (i)(3) (i) and (ii) of this section are available for less than 75 percent of the operating hours.

(D) For data compression systems approved under paragraph (h)(5)(iii) of this section, an operating day when the monitor operated for less than 75 percent of the operating hours or a day when less than 18 monitoring values were recorded.

(ii) For miscellaneous process vents, excess emissions shall be reported for the operating parameters specified in table 10 of this subpart unless other site-specific parameter(s) have been approved by the operating permit authority.

(iii) Periods of startup and shutdown that meet the definition of §63.641, and malfunction that meet the definition in §63.2 and periods of performance testing and monitoring system calibration shall not be considered periods of excess emissions. Malfunctions may include process unit, control device, or monitoring system malfunctions.

(7) If a performance test for determination of compliance for a new emission point subject to this subpart or for an emission point that has changed from Group 2 to Group 1 is conducted during the period covered by a Periodic Report, the results of the performance test shall be included in the Periodic Report.

(i) Results of the performance test shall include the percentage of emissions reduction or outlet pollutant concentration reduction (whichever is needed to determine compliance) and the values of the monitored operating parameters.

(ii) The complete test report shall be maintained onsite.

(8) The owner or operator of a source shall submit quarterly reports for all emission points included in an emissions average.

(i) The quarterly reports shall be submitted no later than 60 calendar days after the end of each quarter. The first report shall be submitted with the Notification of Compliance Status report no later than 150 days after the compliance date specified in §63.640.

(ii) The quarterly reports shall include:

(A) The information specified in this paragraph and in paragraphs (g)(2) through (g)(7) of this section for all storage vessels and miscellaneous process vents included in an emissions average;

(B) The information required to be reported by §63.428 (h)(1), (h)(2), and (h)(3) for each gasoline loading rack included in an emissions average, unless this information has already been submitted in a separate report;

(C) The information required to be included in quarterly reports by §§63.567(f) and 63.567(i)(2) of subpart Y of this part for each marine tank vessel loading operation included in an emissions average, unless the information has already been submitted in a separate report;

(D) Any information pertaining to each wastewater stream included in an emissions average that the source is required to report under the Implementation Plan for the source;

(E) The credits and debits calculated each month during the quarter;

(F) A demonstration that debits calculated for the quarter are not more than 1.30 times the credits calculated for the quarter, as required under §§63.652(e)(4);

(G) The values of any inputs to the credit and debit equations in §63.652 (g) and (h) that change from month to month during the quarter or that have changed since the previous quarter; and

(H) Any other information the source is required to report under the Implementation Plan for the source.

(iii) Every fourth quarterly report shall include the following:

(A) A demonstration that annual credits are greater than or equal to annual debits as required by §63.652(e)(3); and

(B) A certification of compliance with all the emissions averaging provisions in §63.652 of this subpart.

(h) Other reports shall be submitted as specified in subpart A of this part and as follows:

(1) Reports of startup, shutdown, and malfunction required by §63.10(d)(5). Records and reports of startup, shutdown, and malfunction are not required if they pertain solely to Group 2 emission points, as defined in §63.641, that are not included in an emissions average. For purposes of this paragraph, startup and shutdown shall have the meaning defined in §63.641, and malfunction shall have the meaning defined in §63.2; and

(2) For storage vessels, notifications of inspections as specified in paragraphs (h)(2)(i) and (h)(2)(ii) of this section;

(i) In order to afford the Administrator the opportunity to have an observer present, the owner or operator shall notify the Administrator of the refilling of each Group 1 storage vessel that has been emptied and degassed.

(A) Except as provided in paragraphs (h)(2)(i) (B) and (C) of this section, the owner or operator shall notify the Administrator in writing at least 30 calendar days prior to filling or refilling of each storage vessel with organic HAP's to afford the Administrator the opportunity to inspect the storage vessel prior to refilling.

(B) Except as provided in paragraph (h)(2)(i)(C) of this section, if the internal inspection required by §§63.120(a)(2), 63.120(a)(3), or 63.120(b)(10) of subpart G of this part is not planned and the owner or operator could not have known about the inspection 30 calendar days in advance of refilling the vessel with organic HAP's, the owner or operator shall notify the Administrator at least 7 calendar days prior to refilling of the storage vessel. Notification may be made by telephone and immediately followed by written documentation demonstrating why the inspection was unplanned. This notification, including the written documentation, may also be made in writing and sent so that it is received by the Administrator at least 7 calendar days prior to the refilling.

(C) The State or local permitting authority can waive the notification requirements of paragraphs (h)(2)(i)(A) and/or (h)(2)(i)(B) of this section for all or some storage vessels at petroleum refineries subject to this subpart. The State or local permitting authority may also grant permission to refill storage vessels sooner than 30 days after submitting the notification required by paragraph (h)(2)(i)(A) of this section, or sooner than 7 days after submitting the notification required by paragraph (h)(2)(i)(B) of this section for all storage vessels, or for individual storage vessels on a case-by-case basis.

(ii) In order to afford the Administrator the opportunity to have an observer present, the owner or operator of a storage vessel equipped with an external floating roof shall notify the Administrator of any seal gap measurements. The notification shall be made in writing at least 30 calendar days in advance of any gap measurements required by §63.120 (b)(1) or (b)(2) of subpart G of this part. The State or local permitting authority can waive this notification requirement for all or some storage vessels subject to the rule or can allow less than 30 calendar days' notice.

(3) For owners or operators of sources required to request approval for a nominal control efficiency for use in calculating credits for an emissions average, the information specified in §63.652(h).

(4) The owner or operator who requests approval to monitor a different parameter than those listed in §63.644 for miscellaneous process vents or who is required by §63.653(a)(8) to establish a site-specific monitoring parameter for a point in an emissions average shall submit the information specified in paragraphs (h)(4)(i) through (h)(4)(iii) of this section. For new or reconstructed sources, the information shall be submitted with the application for approval of construction or reconstruction required by §63.5(d) of subpart A and for existing sources, and the information shall be submitted no later than 18 months prior to the compliance

date. The information may be submitted in an operating permit application, in an amendment to an operating permit application, or in a separate submittal.

(i) A description of the parameter(s) to be monitored to determine whether excess emissions occur and an explanation of the criteria used to select the parameter(s).

(ii) A description of the methods and procedures that will be used to demonstrate that the parameter can be used to determine excess emissions and the schedule for this demonstration. The owner or operator must certify that they will establish a range for the monitored parameter as part of the Notification of Compliance Status report required in paragraphs (e) and (f) of this section.

(iii) The frequency and content of monitoring, recording, and reporting if: monitoring and recording are not continuous; or if periods of excess emissions, as defined in paragraph (g)(6) of this section, will not be identified in Periodic Reports required under paragraphs (e) and (g) of this section. The rationale for the proposed monitoring, recording, and reporting system shall be included.

(5) An owner or operator may request approval to use alternatives to the continuous operating parameter monitoring and recordkeeping provisions listed in paragraph (i) of this section.

(i) Requests shall be submitted with the Application for Approval of Construction or Reconstruction for new sources and no later than 18 months prior to the compliance date for existing sources. The information may be submitted in an operating permit application, in an amendment to an operating permit application, or in a separate submittal. Requests shall contain the information specified in paragraphs (h)(5)(iii) through (h)(5)(iv) of this section, as applicable.

(ii) The provisions in § 63.8(f)(5)(i) of subpart A of this part shall govern the review and approval of requests.

(iii) An owner or operator may request approval to use an automated data compression recording system that does not record monitored operating parameter values at a set frequency (for example, once every hour) but records all values that meet set criteria for variation from previously recorded values.

(A) The requested system shall be designed to:

(*1*) Measure the operating parameter value at least once every hour.

(*2*) Record at least 24 values each day during periods of operation.

(*3*) Record the date and time when monitors are turned off or on.

(*4*) Recognize unchanging data that may indicate the monitor is not functioning properly, alert the operator, and record the incident.

(*5*) Compute daily average values of the monitored operating parameter based on recorded data.

(B) The request shall contain a description of the monitoring system and data compression recording system including the criteria used to determine which monitored values are recorded and retained, the method for calculating daily averages, and a demonstration that the system meets all criteria of paragraph (h)(5)(iii)(A) of this section.

(iv) An owner or operator may request approval to use other alternative monitoring systems according to the procedures specified in § 63.8(f) of subpart A of this part.

(6) The owner or operator shall submit the information specified in paragraphs (h)(6)(i) through (h)(6)(iii) of this section, as applicable. For existing sources, this information shall be submitted in the initial Notification of Compliance Status report. For a new source, the information shall be submitted with the application for approval of construction or reconstruction required by § 63.5(d) of subpart A of this part. The information may be submitted in an operating permit application, in an amendment to an operating permit application, or in a separate submittal.

(i) The determination of applicability of this subpart to petroleum refining process units that are designed and operated as flexible operation units.

(ii) The determination of applicability of this subpart to any storage vessel for which use varies from year to year

(iii) The determination of applicability of this subpart to any distillation unit for which use varies from year to year.

(i) *Recordkeeping.* (1) Each owner or operator subject to the storage vessel provisions in §63.646 shall keep the records specified in §63.123 of subpart G of this part except as specified in paragraphs (i)(1)(i) through (i)(1)(iv) of this section.

(i) Records related to gaskets, slotted membranes, and sleeve seals are not required for storage vessels within existing sources.

(ii) All references to §63.122 in §63.123 of subpart G of this part shall be replaced with §63.654(e).

(iii) All references to §63.150 in §63.123 of subpart G of this part shall be replaced with §63.652.

(iv) If a storage vessel is determined to be Group 2 because the weight percent total organic HAP of the stored liquid is less than or equal to 4 percent for existing sources or 2 percent for new sources, a record of any data, assumptions, and procedures used to make this determination shall be retained.

(2) Each owner or operator required to report the results of performance tests under paragraphs (f) and (g)(7) of this section shall retain a record of all reported results as well as a complete test report, as described in paragraph (f)(2)(ii) of this section for each emission point tested.

(3) Each owner or operator required to continuously monitor operating parameters under §63.644 for miscellaneous process vents or under §§63.652 and 63.653 for emission points in an emissions average shall keep the records specified in paragraphs (i)(3)(i) through (i)(3)(v) of this section unless an alternative recordkeeping system has been requested and approved under paragraph (h) of this section.

(i) The monitoring system shall measure data values at least once every hour.

(ii) The owner or operator shall record either:

(A) Each measured data value; or

(B) Block average values for 1 hour or shorter periods calculated from all measured data values during each period. If values are measured more frequently than once per minute, a single value for each minute may be used to calculate the hourly (or shorter period) block average instead of all measured values.

(iii) Daily average values of each continuously monitored parameter shall be calculated for each operating day and retained for 5 years except as specified in paragraph (i)(3)(iv) of this section.

(A) The daily average shall be calculated as the average of all values for a monitored parameter recorded during the operating day. The average shall cover a 24-hour period if operation is continuous, or the number of hours of operation per day if operation is not continuous.

(B) The operating day shall be the period defined in the Notification of Compliance Status report. It may be from midnight to midnight or another daily period.

(iv) If all recorded values for a monitored parameter during an operating day are within the range established in the Notification of Compliance Status report, the owner or operator may record that all values were within the range and retain this record for 5 years rather than calculating and recording a daily average for that day. For these days, the records required in paragraph (i)(3)(ii) of this section shall also be retained for 5 years.

(v) Monitoring data recorded during periods of monitoring system breakdowns, repairs, calibration checks, and zero (low-level) and high-level adjustments shall not be included in any average computed under this subpart. Records shall be kept of the times and durations of all such periods and any other periods during process or control device operation when monitors are not operating.

(4) All other information required to be reported under paragraphs (a) through (h) of this section shall be retained for 5 years.

[60 FR 43260, Aug. 18, 1995, as amended at 61 FR 29881, June 12, 1996; 63 FR 44141, Aug. 18, 1998]

§ 63.655 Implementation and enforcement.

(a) This subpart can be implemented and enforced by the U.S. EPA, or a delegated authority such as the applicable State, local, or Tribal agency. If the U.S. EPA Administrator has delegated authority to a State, local, or Tribal agency, then that agency, in addition to the U.S. EPA, has the authority to implement and enforce this subpart. Contact the applicable U.S. EPA Regional Office to find out if implementation and enforcement of this subpart is delegated to a State, local, or Tribal agency.

(b) In delegating implementation and enforcement authority of this subpart to a State, local, or Tribal agency under subpart E of this part, the authorities contained in paragraph (c) of this section are retained by the Administrator of U.S. EPA and cannot be transferred to the State, local, or Tribal agency.

(c) The authorities that cannot be delegated to State, local, or Tribal agencies are as specified in paragraphs (c)(1) through (4) of this section.

(1) Approval of alternatives to the requirements in §§63.640, 63.642(g) through (l), 63.643, and 63.646 through 63.652. Where these standards reference another subpart, the cited provisions will be delegated according to the delegation provisions of the referenced subpart. Where these standards reference another subpart and modify the requirements, the requirements shall be modified as described in this subpart. Delegation of the modified requirements will also occur according to the delegation provisions of the referenced subpart.

(2) Approval of major alternatives to test methods under §63.7(e)(2)(ii) and (f), as defined in §63.90, and as required in this subpart.

(3) Approval of major alternatives to monitoring under §63.8(f), as defined in §63.90, and as required in this subpart.

(4) Approval of major alternatives to recordkeeping and reporting under §63.10(f), as defined in §63.90, and as required in this subpart.

[68 FR 37351, June 23, 2003]

§§ 63.656–63.679 [Reserved]

APPENDIX TO SUBPART CC OF PART 63—TABLES

TABLE 1—HAZARDOUS AIR POLLUTANTS

Chemical name	CAS No.[a]
Benzene	71432
Biphenyl	92524
Butadiene (1,3)	10990
Carbon disulfide	75150
Carbonyl sulfide	463581
Cresol (mixed isomers[b])	1319773
Cresol (m-)	108394
Cresol (o-)	95487
Cresol (p-)	106445
Cumene	98828
Dibromoethane (1,2) (ethylene dibromide)	106934
Dichloroethane (1,2)	107062
Diethanolamine	111422
Ethylbenzene	100414
Ethylene glycol	107211
Hexane	110543
Methanol	67561
Methyl ethyl ketone (2-butanone)	78933
Methyl isobutyl ketone (hexone)	108101
Methyl tert butyl ether	1634044
Naphthalene	91203
Phenol	108952
Toluene	108883
Trimethylpentane (2,2,4)	540841
Xylene (mixed isomers[b])	1330207
xylene (m-)	108383
xylene (o-)	95476
xylene (p-)	106423

[a] CAS number = Chemical Abstract Service registry number assigned to specific compounds, isomers, or mixtures of compounds.

[b] Isomer means all structural arrangements for the same number of atoms of each element and does not mean salts, esters, or derivatives.

TABLE 2—LEAK DEFINITIONS FOR PUMPS AND VALVES

Standard[a]	Phase	Leak definition (parts per million)
§ 63.163 (pumps)	I	10,000
	II	5,000
	III	2,000
§ 63.168 (valves)	I	10,000
	II	1,000
	III	1,000

[a] Subpart H of this part.

TABLE 3—EQUIPMENT LEAK RECORDKEEPING AND REPORTING REQUIREMENTS FOR SOURCES COMPLYING WITH § 63.648 OF SUBPART CC BY COMPLIANCE WITH SUBPART H OF THIS PART[a]

Reference (section of subpart H of this part)	Description	Comment
63.181(a)	Recordkeeping system requirements	Except for §§63.181(b)(2)(iii) and 63.181(b)(9).
63.181(b)	Records required for process unit equipment.	Except for §§63.181(b)(2)(iii) and 63.181(b)(9).
63.181(c)	Visual inspection documentation	Except for §§63.181(b)(2)(iii) and 63.181(b)(9).
63.181(d)	Leak detection record requirements	Except for § 63.181(d)(8).
63.181(e)	Compliance requirements for pressure tests for batch product process equipment trains.	This subsection does not apply to subpart CC.
63.181(f)	Compressor compliance test records.	
63.181(g)	Closed-vent systems and control device record requirements.	
63.181(h)	Process unit quality improvement program records.	
63.181(i)	Heavy liquid service determination record.	
63.181(j)	Equipment identification record.	
63.181(k)	Enclosed-vented process unit emission limitation record requirements.	
63.182(a)	Reports.	
63.182(b)	Initial notification report requirements.	Not required.
63.182(c)	Notification of compliance status report	Except in § 63.182(c); change "within 90 days of the compliance dates" to "within 150 days of the compliance dates"; except in §§ 63.182 (c)(2) and (c)(4).
63.182(d)	Periodic report	Except for §§ 63.182 (d)(2)(vii), (d)(2)(viii), and (d)(3).

[a] This table does not include all the requirements delineated under the referenced sections. See referenced sections for specific requirements.

TABLE 4—GASOLINE DISTRIBUTION EMISSION POINT RECORDKEEPING AND REPORTING REQUIREMENTS[a]

Reference (section of subpart R of this part)	Description	Comment
63.428(b)	Records of test results for each gasoline cargo tank loaded at the facility.	
63.428(c)	Continuous monitoring data recordkeeping requirements.	
63.428(g)(1)	Semiannual report loading rack information.	Required to be submitted with the periodic report required under 40 CFR part 63 subpart CC.
63.428 (h)(1) through (h)(3)	Excess emissions report loading rack information.	Required to be submitted with the periodic report required under 40 CFR part 63 subpart CC.

[a] This table does not include all the requirements delineated under the referenced sections. See referenced sections for specific requirements.

TABLE 5—MARINE VESSEL LOADING AND UNLOADING OPERATIONS RECORDKEEPING AND REPORTING REQUIREMENTS[a]

Reference (section of subpart Y of this part)	Description	Comment
63.565(a)	Performance test/site test plan	The information required under this paragraph is to be submitted with the notification of compliance status report required under 40 CFR part 63, subpart CC.
63.565(b)	Performance test data requirements.	
63.567(a)	General Provisions (subpart A) applicability	
63.567(c)	Vent system valve bypass recordkeeping requirements	

TABLE 5—MARINE VESSEL LOADING AND UNLOADING OPERATIONS RECORDKEEPING AND REPORTING REQUIREMENTS [a]—Continued

Reference (section of subpart Y of this part)	Description	Comment
63.567(d)	Continuous equipment monitoring recordkeeping requirements	
63.567(e)	Flare recordkeeping requirements	
63.567(f)	Quarterly report requirements	The information required under this paragraph is to be submitted with the periodic report required under 40 CFR part 63 subpart CC.
63.567(g)	Marine vessel vapor-tightness documentation	
63.567(h)	Documentation file maintenance	
63.567(i)	Emission estimation reporting and recordkeeping procedures	

[a] This table does not include all the requirements delineated under the referenced sections. See referenced sections for specific requirements.

TABLE 6—GENERAL PROVISIONS APPLICABILITY TO SUBPART CC [a]

Reference	Applies to subpart CC	Comment
63.1(a)(1)	Yes	
63.1(a)(2)	Yes	
63.1(a)(3)	Yes	
63.1(a)(4)	No	Subpart CC (this table) specifies applicability of each paragraph in subpart A to subpart CC.
63.1(a)(5)–63.1(a)(9)	No	
63.1(a)(10)	No	Subpart CC and other cross-referenced subparts specify calendar or operating day.
63.1(a)(11)	Yes	
63.1(a)(12)	Yes	
63.1(a)(13)	Yes	
63.1(a)(14)	Yes	
63.1(b)(1)	No	Subpart CC specifies its own applicability.
63.1(b)(2)	Yes	
63.1(b)(3)	No	
63.1(c)(1)	No	Subpart CC explicitly specifies requirements that apply.
63.1(c)(2)	No	Area sources are not subject to subpart CC.
63.1(c)(3)	No	
63.1(c)(4)	Yes	
63.1(c)(5)	Yes	Except that sources are not required to submit notifications overridden by this table.
63.1(d)	No	
63.1(e)	No	
63.2	Yes	§ 63.641 of subpart CC specifies that if the same term is defined in subparts A and CC, it shall have the meaning given in subpart CC.
63.3	No	Units of measure are spelled out in subpart CC.
63.4(a)(1)–63.4(a)(3)	Yes	
63.4(a)(4)	No	Reserved.
63.4(a)(5)	Yes	
63.4(b)	Yes	
63.4(c)	Yes	
63.5(a)(1)	Yes	Except replace term "source" and "stationary source" in § 63.5(a)(1) of subpart A with "affected source."
63.5(a)(2)	Yes	
63.5(b)(1)	Yes	
63.5(b)(2)	No	Reserved.
63.5(b)(3)	Yes	
63.5(b)(4)	Yes	Except the cross-reference to § 63.9(b) is changed to § 63.9(b) (4) and (5). Subpart CC overrides § 63.9 (b)(2) and (b)(3).
63.5(b)(5)	Yes	
63.5(b)(6)	Yes	
63.5(c)	No	Reserved.

TABLE 6—GENERAL PROVISIONS APPLICABILITY TO SUBPART CC[a]—Continued

Reference	Applies to subpart CC	Comment
63.5(d)(1)(i)	Yes	Except that the application shall be submitted as soon as practicable before startup but no later than 90 days (rather than 60 days) after the promulgation date of subpart CC if the construction or reconstruction had commenced and initial startup had not occurred before the promulgation of subpart CC.
63.5(d)(1)(ii)	Yes	Except that for affected sources subject to subpart CC, emission estimates specified in § 63.5(d)(1)(ii)(H) are not required.
63.5(d)(1)(iii)	No	Subpart CC requires submittal of the notification of compliance status report in § 63.654(e).
63.5(d)(2)	No	
63.5(d)(3)	Yes	Except § 63.5(d)(3)(ii) does not apply.
63.5(d)(4)	Yes	
63.5(e)	Yes	
63.5(f)(1)	Yes	
63.5(f)(2)	Yes	Except that the "60 days" in the cross-referenced § 63.5(d)(1) is changed to "90 days," and the cross-reference to (b)(2) does not apply.
63.6(a)	Yes	
63.6(b)(1)	No	Subpart CC specifies compliance dates for sources subject to subpart CC.
63.6(b)(2)	No	
63.6(b)(3)	Yes	
63.6(b)(4)	No	May apply when standards are proposed under section 112(f) of the Clean Air Act.
63.6(b)(5)	No	§ 63.654(d) of subpart CC includes notification requirements.
63.6(b)(6)	No	
63.6(b)(7)	No	
63.6(c)(1)	No	§ 63.640 of subpart CC specifies the compliance date.
63.6(c)(2)–63.6(c)(4)	No	
63.6(c)(5)	Yes	
63.6(d)	No	
63.6(e)	Yes	Does not apply to Group 2 emission points.[b] The startup, shutdown, and malfunction plan specified in § 63.6(e)(3) is not required for wastewater operations that are not subject to subpart G of this part.
		Except that actions taken during a startup, shutdown, or malfunction that are not consistent with the startup, shutdown, and malfunction plan do not need to be reported within 2 and 7 days of commencing and completing the action, respectively, but must be included in the next periodic report.
63.6(f)(1)	Yes	
63.6(f)(2)(i)	Yes	
63.6(f)(2)(ii)	Yes	Subpart CC specifies the use of monitoring data in determining compliance with subpart CC.
63.6(f)(2)(iii) (A), (B), and (C)	Yes	
63.6(f)(2)(iii)(D)	No	
63.6(f)(2)(iv)	Yes	
63.6(f)(2)(v)	Yes	
63.6(f)(3)	Yes	
63.6(g)	Yes	
63.6(h) (1) and (2)	Yes	
63.6(h) (4) and (5)	No	Visible emission requirements and timing in subpart CC.
63.6(h)(6)	Yes	
63.6(h) (7) through (9)	No	Subpart CC does not require opacity standards.
63.6(i)	Yes	Except for § 63.6(i)(15), which is reserved.
63.6(j)	Yes	
63.7(a)(1)	No	Subpart CC specifies required testing and compliance demonstration procedures.
63.7(a)(2)	No	Test results must be submitted in the notification of compliance status report due 150 days after compliance date, as specified in § 63.654(d) of subpart CC.

TABLE 6—GENERAL PROVISIONS APPLICABILITY TO SUBPART CC [a]—Continued

Reference	Applies to subpart CC	Comment
63.7(a)(3)	Yes	
63.7(b)	No	
63.7(c)	No	
63.7(d)	Yes	
63.7(e)(1)	Yes	
63.7(e)(2)	Yes	
63.7(e)(3)	No	Subpart CC specifies test methods and procedures.
63.7(e)(4)	Yes	
63.7(f)	No	Subpart CC specifies applicable methods and provides alternatives.
63.7(g)	No	Performance test reporting specified in § 63.654(d).
63.7(h)(1)	Yes	
63.7(h)(2)	Yes	
63.7(h)(3)	Yes	Yes, except site-specific test plans shall not be required, and where § 63.7(g)(3) specifies submittal by the date the site-specific test plan is due, the date shall be 90 days prior to the notification of compliance status report in § 63.654(d).
63.7(h)(4)	No	
63.7(h)(5)	Yes	
63.8(a)	No	
63.8(b)(1)	Yes	
63.8(b)(2)	No	Subpart CC specifies locations to conduct monitoring.
63.8(b)(3)	Yes	
63.8(c)(1)(i)	Yes	
63.8(c)(1)(ii)	No	Addressed by periodic reports in § 63.654(e) of subpart CC.
63.8(c)(1)(iii)	Yes	
63.8(c)(2)	Yes	
63.8(c)(3)	Yes	Except that verification of operational status shall, at a minimum, include completion of the manufacturer's written specifications or recommendations for installation, operation, and calibration of the system or other written procedures that provide adequate assurance that the equipment would monitor accurately.
63.8(c)(4)	No	Subpart CC specifies monitoring frequency in § 63.641 and § 63.654(g)(3) of subpart CC.
63.8(c)(5)–63.8(c)(8)	No	
63.8(d)	No	
63.8(e)	No	
63.8(f)(1)	Yes	
63.8(f)(2)	Yes	
63.8(f)(3)	Yes	
63.8(f)(4)(i)	No	Timeframe for submitting request is specified in § 63.654(f)(4) of subpart CC.
63.8(f)(4)(ii)	Yes	
63.8(f)(4)(iii)	No	
63.8(f)(5)(i)	Yes	
63.8(f)(5)(ii)	No	
63.8(f)(5)(iii)	Yes	
63.8(f)(6)	No	Subpart CC does not require continuous emission monitors.
63.8(g)	No	Subpart CC specifies data reduction procedures in § 63.654(h)(3).
63.9(a)	Yes	Except that the owner or operator does not need to send a copy of each notification submitted to the Regional Office of the EPA as stated in § 63.9(a)(4)(ii).
63.9(b)(1)(i)	No	Specified in § 63.654(d)(2) of subpart CC.
63.9(b)(1)(ii)	No	
63.9(b)(2)	No	An initial notification report is not required under subpart CC.
63.9(b)(3)	No	
63.9(b)(4)	Yes	Except that the notification in § 63.9(b)(4)(i) shall be submitted at the time specified in § 63.654(d)(2) of subpart CC.
63.9(b)(5)	Yes	Except that the notification in § 63.9(b)(5) shall be submitted at the time specified in § 63.654(d)(2) of subpart CC.

TABLE 6—GENERAL PROVISIONS APPLICABILITY TO SUBPART CC[a]—Continued

Reference	Applies to subpart CC	Comment
63.9(c)	Yes	
63.9(d)	Yes	
63.9(e)	No	
63.9(f)	No	
63.9(g)	No	
63.9(h)	No	Subpart CC §63.652(d) specifies notification of compliance status report requirements.
63.9(i)	Yes	
63.9(j)	No	
63.10(a)	Yes	
63.10(b)(1)	No	§63.644(d) of subpart CC specifies record retention requirements.
63.10(b)(2)(i)	Yes	
63.10(b)(2)(ii)	Yes	
63.10(b)(2)(iii)	No	
63.10(b)(2)(iv)	Yes	
63.10(b)(2)(v)	Yes	
63.10(b)(2)(vi)–(ix)	No	
63.10(b)(2)(x)	Yes	
63.10(b)(2)(xii)–(xiv)	No	
63.10(b)(3)	No	
63.10(c)	No	
63.10(d)(1)	No	
63.10(d)(2)	No	§63.654(d) of subpart CC specifies performance test reporting.
63.10(d)(3)	No	
63.10(d)(4)	Yes	
63.10(d)(5)(i)	Yes[b]	Except that reports required by §63.10(d)(5)(i) may be submitted at the same time as periodic reports specified in §63.654(e) of subpart CC.
63.10(d)(5)(ii)	Yes	Except that actions taken during a startup, shutdown, or malfunction that are not consistent with the startup, shutdown, and malfunction plan do not need to be reported within 2 and 7 days of commencing and completing the action, respectively, but must be included in the next periodic report.
63.10(e)	No	
63.10(f)	Yes	
63.11–63.15	Yes	

[a] Wherever subpart A specifies "postmark" dates, submittals may be sent by methods other than the U.S. Mail (e.g., by fax or courier). Submittals shall be sent by the specified dates, but a postmark is not required.
[b] The plan, and any records or reports of startup, shutdown, and malfunction do not apply to Group 2 emission points.

TABLE 7—FRACTION MEASURED (F_m), FRACTION EMITTED (F_e), AND FRACTION REMOVED (FR) FOR HAP COMPOUNDS IN WASTEWATER STREAMS

Chemical name	CAS No.[a]	F_m	F_e	Fr
Benzene	71432	1.00	0.80	0.99
Biphenyl	92524	0.86	0.45	0.99
Butadiene (1,3-)	106990	1.00	0.98	0.99
Carbon disulfide	75150	1.00	0.92	0.99
Cumene	98828	1.00	0.88	0.99
Dichloroethane (1,2-) (Ethylene dichloride)	107062	1.00	0.64	0.99
Ethylbenzene	100414	1.00	0.83	0.99
Hexane	110543	1.00	1.00	0.99
Methanol	67561	0.85	0.17	0.31
Methyl ethyl ketone (2-Butanone)	78933	0.99	0.48	0.95
Methyl isobutyl ketone (Hexone)	108101	0.98	0.53	0.99
Methyl tert-butyl ether	1634044	1.00	0.57	0.99
Naphthalene	91203	0.99	0.51	0.99
Trimethylpentane (2,2,4-)	540841	1.00	1.00	0.99
Xylene (m-)	108383	1.00	0.82	0.99
Xylene (o-)	95476	1.00	0.79	0.99
Xylene (p-)	106423	1.00	0.82	0.99

[a] CAS numbers refer to the Chemical Abstracts Service registry number assigned to specific compounds, isomers, or mixtures of compounds.

TABLE 8—VALVE MONITORING FREQUENCY FOR PHASE III

Performance level Leaking valves[a] (%)	Valve monitoring frequency
≥4	Monthly or QIP.[b]
<4	Quarterly.
<3	Semiannual.
<2	Annual.

[a] Percent leaking valves is calculated as a rolling average of two consecutive monitoring periods.
[b] QIP=Quality improvement program. Specified in § 63.175 of subpart H of this part.

TABLE 9—VALVE MONITORING FREQUENCY FOR ALTERNATIVE

Performance level Leaking valves[a] (%)	Valve monitoring frequency under § 63.649 alternative
≥5	Monthly or QIP.[b]
<5	Quarterly.
<4	Semiannual.
<3	Annual.

[a] Percent leaking valves is calculated as a rolling average of two consecutive monitoring periods.
[b] QIP=Quality improvement program. Specified in § 63.175 of subpart H of this part.

TABLE 10—MISCELLANEOUS PROCESS VENTS—MONITORING, RECORDKEEPING AND REPORTING REQUIREMENTS FOR COMPLYING WITH 98 WEIGHT-PERCENT REDUCTION OF TOTAL ORGANIC HAP EMISSIONS OR A LIMIT OF 20 PARTS PER MILLION BY VOLUME

Control device	Parameters to be monitored[a]	Recordkeeping and reporting requirements for monitored parameters
Thermal incinerator	Firebox temperature[b] (63.644(a)(1)(i)).	1. Continuous records[c]. 2. Record and report the firebox temperature averaged over the full period of the performance test—NCS[d]. 3. Record the daily average firebox temperature for each operating day[e]. 4. Report all daily average temperatures that are outside the range established in the NCS or operating permit and all operating days when insufficient monitoring data are collected[f]—PR[g].
Catalytic incinerator	Temperature upstream and downstream of the catalyst bed (63.644(a)(1)(ii)).	1. Continuous records[c]. 2. Record and report the upstream and downstream temperatures and the temperature difference across the catalyst bed averaged over the full period of the performance test—NCS[d]. 3. Record the daily average upstream temperature and temperature difference across the catalyst bed for each operating day[e]. 4. Report all daily average upstream temperatures that are outside the range established in the NCS or operating permit—PR[g]. 5. Report all daily average temperature differences across the catalyst bed that are outside the range established in the NCS or operating permit—PR[g]. 6. Report all operating days when insufficient monitoring data are collected[f].
Boiler or process heater with a design heat capacity less than 44 megawatts where the vent stream is *not* introduced into the flame zone[h,j].	Firebox temperature[h] (63.644(a)(4)).	1. Continuous records[c]. 2. Record and report the firebox temperature averaged over the full period of the performance test—NCS[d]. 3. Record the daily average firebox temperature for each operating day[e]. 4. Report all daily average firebox temperatures that are outside the range established in the NCS or operating permit and all operating days when insufficient monitoring data are collected[f]—PR[g].

TABLE 10—MISCELLANEOUS PROCESS VENTS—MONITORING, RECORDKEEPING AND REPORTING REQUIREMENTS FOR COMPLYING WITH 98 WEIGHT-PERCENT REDUCTION OF TOTAL ORGANIC HAP EMISSIONS OR A LIMIT OF 20 PARTS PER MILLION BY VOLUME—Continued

Control device	Parameters to be monitored[a]	Recordkeeping and reporting requirements for monitored parameters
Flare	Presence of a flame at the pilot light (63.644(a)(2)).	1. Hourly records of whether the monitor was continuously operating and whether a pilot flame was continuously present during each hour. 2. Record and report the presence of a flame at the pilot light over the full period of the compliance determination—NCS[d]. 3. Record the times and durations of all periods when all pilot flames for a flare are absent or the monitor is not operating. 4. Report the times and durations of all periods when all pilot flames for a flare are absent or the monitor is not operating.
All control devices	Presence of flow diverted to the atmosphere from the control device (63.644(c)(1)) *or*.	1. Hourly records of whether the flow indicator was operating and whether flow was detected at any time during each hour. 2. Record and report the times and durations of all periods when the vent stream is diverted through a bypass line or the monitor is not operating—PR[g].
	Monthly inspections of sealed valves [63.644(c)(2)].	1. Records that monthly inspections were performed. 2. Record and report all monthly inspections that show the valves are not closed or the seal has been changed—PR[g].

[a] Regulatory citations are listed in parentheses.
[b] Monitor may be installed in the firebox or in the ductwork immediately downstream of the firebox before any substantial heat exchange is encountered.
[c] "Continuous records" is defined in §63.641.
[d] NCS = Notification of compliance status report described in §63.654.
[e] The daily average is the average of all recorded parameter values for the operating day. If all recorded values during an operating day are within the range established in the NCS or operating permit, a statement to this effect can be recorded instead of the daily average.
[f] When a period of excess emission is caused by insufficient monitoring data, as described in §63.654(g)(6)(i) (C) or (D), the duration of the period when monitoring data were not collected shall be included in the Periodic Report.
[g] PR = Periodic Reports described in §63.654(g).
[h] No monitoring is required for boilers and process heaters with a design heat capacity ≥44 megawatts or for boilers and process heaters where all vent streams are introduced into the flame zone. No recordkeeping or reporting associated with monitoring is required for such boilers and process heaters.
[i] Process vents that are routed to refinery fuel gas systems are not regulated under this subpart. No monitoring, recordkeeping, or reporting is required for boilers and process heaters that combust refinery fuel gas.

[60 FR 43260, Aug. 18, 1995, as amended at 61 FR 29881, 29882, June 12, 1996; 63 FR 44142, 44143, Aug. 18, 1998]

Subpart DD—National Emission Standards for Hazardous Air Pollutants from Off-Site Waste and Recovery Operations

SOURCE: 61 FR 34158, July 1, 1996, unless otherwise noted.

§63.680 Applicability and designation of affected sources.

(a) The provisions of this subpart apply to the owner and operator of a plant site for which both of the conditions specified in paragraphs (a)(1) and (a)(2) of this section are applicable. If either one of these conditions does not apply to the plant site, then the owner and operator of the plant site are not subject to the provisions of this subpart.

(1) The plant site is a major source of hazardous air pollutant (HAP) emissions as defined in 40 CFR 63.2.

(2) At the plant site is located one or more of operations that receives off-site materials as specified in paragraph (b) of this section and the operations is one of the following waste management operations or recovery operations as specified in paragraphs (a)(2)(i) through (a)(2)(vi) of this section.

(i) A waste management operation that receives off-site material and the operation is regulated as a hazardous waste treatment, storage, and disposal facility (TSDF) under either 40 CFR part 264 or part 265.

APPENDIX H

SUBPART CC EQUIPMENT LIST ***(Modified July 24, 2006)***

Group 1 Storage Vessels (Tanks) [a, b] *(Modified July 24, 2006)*			
Tank #	**Liquids Stored**	**Type Of Tank**	**Tank Capacity (BBL)**
1-15	Unleaded Gasoline	Internal Floating Roof (IFR)	20,790
1-17	Prem. Unleaded Gasoline	IFR	4,080
1-21	Alkylate	IFR	8,200
1-106	Unleaded Gasoline	External Floating Roof (EFR)	107,500
2-34A	***Reformate***	***EFR***	***23,982***
2-35	Alkylate	IFR	21,813
2-60	Natural Gasoline	IFR	9,072
2-67	Light Straight Run	***IFR***	9,135
2-70	Sub-Octane No Lead Gasoline	EFR	29,876
2-71	Prem. Unleaded Gasoline	EFR	29,876
2-72	Crude Oil (RVP 5)	EFR	73,876
2-73	Crude Oil (RVP 5)	EFR	73,876
2-74	Crude Oil (RVP 5)	EFR	70,687
2-75	Coker Naphtha	EFR	70,880
2-100	***Low Sulfur Gasoline***	IFR	36,374
2-102	No Lead Gasoline	EFR	72,360
2-103	Wastewater	***EFR***	20,000
2-104	***High Sulfur Gasoline***	IFR	47,100

[a] The Group 1 storage vessels also subject to the provisions of 40 CFR 60 Subpart K (Tanks 2-74 and 2-75) or 40 CFR 60 Subpart Ka (Tanks 1-106), shall only comply with 40 CFR 63 Subpart CC. (40 CFR 63.640 (n)(5))

[b] The Group 1 storage vessels also subject to the provisions of 40 CFR 60 Subpart Kb (Tanks 2-103 ***and 2-34A***) shall only comply with 40 CFR 60 Subpart Kb. (40 CFR 63.640 (n)(1))

Group 2 Storage Vessels (Tanks) [a]			
Tank #	**Liquids Stored**	**Type Of Tank**	**Tank Capacity (BBL)**
1-WA	Asphalt/Vacuum Bottoms	FR	550
1-1	Coker Distillate (MOSC)	FR	22,820
1-2	Fire Water	FR	24,727
1-3	Out of Service	FR	9,926
1-4	Out of Service	FR	9,953
1-7	Recovered Oil	FR	5,134
1--8	Unichem 8162	FR	300
1-9	Recovered Oil	FR	5,134
1-10	Coker Distillate (MOSC)	FR	1,936
1-12	Coker Distillate (MOSC)	FR	2,001
1-13	Cracked Stock Distillate	FR	1,827
1-14	Low Sulfur #2 Diesel	FR	20,617
1-16	Ethyl Alcohol	FR	2,380
1-18	Coker Distillate (MOSC)	FR	2,380
1-19	Coker Distillate (MOSC)	FR	4,940
1-20	Slurry	FR	4,760
1-26	Low Sulfur #2 Diesel	FR	4,788
1-27	Out of Service	FR	5,150
1-28	Diesel	FR	4,788
1-29	Coker Gasoil	FR	10,140
1-32	Diesel	FR	8,937
1-33	Cracked Stock Distillate	FR	9,828
1-35	Cracked Stock Distillate	FR	1,000
1-40	Slurry	FR	9,720
1-41	Coker Distillate (MOSC)	FR	4,760
1-48	Coker Distillate	FR	1,232
1-49	Coker Distillate	FR	1,232
1-50	Asphalt/Vacuum Bottoms	FR	44,392
1-51	Asphalt/Vacuum Bottoms	FR	23,750
1-52	Asphalt/Vacuum Bottoms	FR	68,820
1-53	Slurry	FR	15,394
1-54	Asphalt/Vacuum Bottoms	FR	23,750
1-55	Asphalt/Vacuum Bottoms	FR	51,711
1-56	Asphalt/Vacuum Bottoms	FR	58,596
1-57	Out Of Service	FR	10,632
1-58	Coker Gasoil	FR	9,828
1-59	Asphalt/Vacuum Bottoms	FR	58,596

Group 2 Storage Vessels (Tanks) [a]			
Tank #	**Liquids Stored**	**Type Of Tank**	**Tank Capacity (BBL)**
1-60	Slurry	FR	604
1-61	Slurry	FR	570
1-62	Slurry	FR	570
1-63	Slurry	FR	570
1-64	Slurry	FR	570
1-65	Slurry	FR	570
1-70	Asphalt/Vacuum Bottoms	FR	570
1-71	Out of Service	FR	570
1-72	Out of Service	FR	570
1-73	Asphalt/Vacuum Bottoms	FR	570
1-74	Asphalt/Vacuum Bottoms	FR	570
1-75	Out Of Service	FR	570
1-80	Asphalt/Vacuum Bottoms	FR	570
1-81	Asphalt/Vacuum Bottoms	FR	570
1-82	Asphalt/Vacuum Bottoms	FR	570
1-83	MC-800 (Asphalt)	FR	570
1-84	Asphalt/Vacuum Bottoms	FR	570
1-85	Asphalt/Vacuum Bottoms	FR	570
1-90	Asphalt/Vacuum Bottoms	FR	53,124
1-91	Asphalt/Vacuum Bottoms	FR	53,124
1-93	Asphalt/Vacuum Bottoms	FR	2,436
1-94	Asphalt/Vacuum Bottoms	FR	2,436
1-95	Asphalt/Vacuum Bottoms	FR	2,602
1-107	SR Distillate	EFR	71,681
2-2	SR Distillate	FR	1,927
2-3	SR Distillate	FR	1,886
2-5	Out of Service	FR	500
2-7	Cracked Stock Distillate	FR	2,397
2-8	Out Of Service	FR	2,554
2-11	SR Distillate	FR	2,288
2-12	SR Distillate	FR	2,288
37664	Out of Service	FR	5,067
2-15	Diesel	FR	28,638
2-16	Diesel	FR	28,638
2-17	Cracked Stock Distillate	FR	26,690
2-20	Virgin Gas Oil	FR	9,666
2-21	Virgin Gas Oil	FR	9,666
2-22	Cracked Stock Distillate	FR	9,558

Group 2 Storage Vessels (Tanks) [a]			
Tank #	**Liquids Stored**	**Type Of Tank**	**Tank Capacity (BBL)**
2-23	Coker Gasoil	FR	9,531
2-26	Recovered Oil	FR	2,346
2-27	Out of Service	FR	2,552
2-28	Virgin Gas Oil	FR	76,152
2-34	Out of Service	FR	23,982
2-36	Recovered Oil	FR	4,698
2-50	Methanol	FR	400
2-61	Sweet Naphtha	FR	9,828
2-62	SR Distillate	FR	9,828
2-63	Heavy Straight Run	FR	9,828
2-64	Slope Oil	FR	8,758
2-101	Diesel	FR	39,256
2-105	Coker Gas Oil	FR	47,025
101-WWTP	Wastewater	FR	22,000
41-WWTP	Recovered Oil	IFR	1,119
36-Tk1002	Slop Oil	FR	1,340
DEA	Diethanolamine (DEA)	FR	1,571
1-AK-1	Asphalt	FR	992
36-TK1004	Coker Distillate	FR	900

[a] Actual tank capacities as of December 1998 - Updated February 2001.

Fixed Roof (FR), Internal Floating Roof (IFR), External Floating Roof (EFR)

Group 1 Miscellaneous Process Vents		
Unit	**Stream**	**Control**
Sour Water Stripper	Sour Water Stripper Degas Drum Vent	Plant #2 (Main) Flare
#3 Amine Treater	Amine Degas Drum Vent	Plant #2 (Main) Flare

Group 2 Miscellaneous Process Vents		
Unit	**Stream**	**Control**
None	LPG Venting	Plant #2 (Main) Flare

Petroleum Refining Process Units	
Unit	**Unit**
Coker Unit	Naphtha Hydrotreater Unit (Hydrobon)
Fluidized Catalytic Cracking Unit	Alkylation Unit
Crude Unit	Gasoline Loading Dock
Gas Con Unit	#3 Amine Unit
Platformer Unit	Butamer Unit
Unifiner Unit	Gas Desulfurization Unit

Facility Wastewater Streams (subject to 40 CFR 63 Subpart CC / 40 CFR 61 Subpart FF standards)
None

APPENDIX I

40 CFR 63 SUBPART UUU

Subpart UUU – National Emission Standards for Hazardous Air Pollutants for Petroleum Refineries: Catalytic Cracking Units, Catalytic Reforming Units, and Sulfur Recovery Units

SOURCE: 67 FR 17773, Apr. 11, 2002, unless otherwise noted.

WHAT THIS SUBPART COVERS

§ 63.1560 What is the purpose of this subpart?

This subpart establishes national emission standards for hazardous air pollutants (HAP) emitted from petroleum refineries. This subpart also establishes requirements to demonstrate initial and continuous compliance with the emission limitations and work practice standards.

§ 63.1561 Am I subject to this subpart?

(a) You are subject to this subpart if you own or operate a petroleum refinery that is located at a major source of HAP emissions.

(1) A petroleum refinery is an establishment engaged primarily in petroleum refining as defined in the Standard Industrial Classification (SIC) code 2911 and the North American Industry Classification (NAIC) code 32411, and used mainly for:

(i) Producing transportation fuels (such as gasoline, diesel fuels, and jet fuels), heating fuels (such as kerosene, fuel gas distillate, and fuel oils), or lubricants;

(ii) Separating petroleum; or

(iii) Separating, cracking, reacting, or reforming an intermediate petroleum stream, or recovering a by-product(s) from the intermediate petroleum stream (e.g., sulfur recovery).

(2) A major source of HAP is a plant site that emits or has the potential to emit any single HAP at a rate of 9.07 megagrams (10 tons) or more per year or any combination of HAP at a rate of 22.68 megagrams (25 tons) or more per year.

(b) [Reserved]

§ 63.1562 What parts of my plant are covered by this subpart?

(a) This subpart applies to each new, reconstructed, or existing affected source at a petroleum refinery.

(b) The affected sources are:

(1) The process vent or group of process vents on fluidized catalytic cracking units that are associated with regeneration of the catalyst used in the unit (i.e., the catalyst regeneration flue gas vent).

(2) The process vent or group of process vents on catalytic reforming units (including but not limited to semi-regenerative, cyclic, or continuous processes) that are associated with regeneration of the catalyst used in the unit. This affected source includes vents that are used during the unit depressurization, purging, coke burn, and catalyst rejuvenation.

(3) The process vent or group of process vents on Claus or other types of sulfur recovery plant units or the tail gas treatment units serving sulfur recovery plants, that are associated with sulfur recovery.

(4) Each bypass line serving a new, existing, or reconstructed catalytic cracking unit, catalytic reforming unit, or sulfur recovery unit. This means each vent system that contains a bypass line (e.g., ductwork) that could divert an affected vent stream away from a control device used to comply with the requirements of this subpart.

(c) An affected source is a new affected source if you commence construction of the affected source after September 11, 1998, and you meet the applicability criteria in §63.1561 at the time you commenced construction.

(d) Any affected source is reconstructed if you meet the criteria in §63.2.

(e) An affected source is existing if it is not new or reconstructed.

(f) This subpart does not apply to:

(1) A thermal catalytic cracking unit.

(2) A sulfur recovery unit that does not recover elemental sulfur or where the modified reaction is carried out in a water solution which contains a metal ion capable of oxidizing the sulfide ion to sulfur (e.g., the LO-CAT II process).

(3) A redundant sulfur recovery unit not located at a petroleum refinery and used by the refinery only for emergency or maintenance backup.

(4) Equipment associated with bypass lines such as low leg drains, high point bleed, analyzer vents, open-ended valves or lines, or pressure relief valves needed for safety reasons.

(5) Gaseous streams routed to a fuel gas system.

[67 FR 17773, Apr. 11, 2002, as amended at 70 FR 6938, Feb. 9, 2005]

§ 63.1563 When do I have to comply with this subpart?

(a) If you have a new or reconstructed affected source, you must comply with this subpart according to the requirements in paragraphs (a)(1) and (2) of this section.

(1) If you startup your affected source before April 11, 2002, then you must comply with the emission limitations and work practice standards for new and reconstructed sources in this subpart no later than April 11, 2002.

(2) If you startup your affected source after April 11, 2002, you must comply with the emission limitations and work practice standards for new and reconstructed sources in this subpart upon startup of your affected source.

(b) If you have an existing affected source, you must comply with the emission limitations and work practice standards for existing affected sources in this subpart by no later than April 11, 2005 except as specified in paragraph (c) of this section.

(c) We will grant an extension of compliance for an existing catalytic cracking unit allowing additional time to meet the emission limitations and work practice standards for catalytic cracking units in §§63.1564 and 63.1565 if you commit to hydrotreating the catalytic cracking unit feedstock and to meeting the emission limitations of this subpart on the same date that your facility meets the final Tier 2 gasoline sulfur control standard (40 CFR part 80, subpart J). To obtain an extension, you must submit a written notification to your permitting authority according to the requirements in §63.1574(e). Your notification must include the information in paragraphs (c)(1) and (2) of this section.

(1) Identification of the affected source with a brief description of the controls to be installed (if needed) to comply with the emission limitations for catalytic cracking units in this subpart.

(2) A compliance schedule, including the information in paragraphs (c)(2)(i) through (iv) of this section.

(i) The date by which onsite construction or the process change is to be initiated.

(ii) The date by which onsite construction or the process change is to be completed.

(iii) The date by which your facility will achieve final compliance with both the final Tier 2 gasoline sulfur control standard as specified in §80.195, and the emission limitations and work practice standards for catalytic cracking units in this subpart. In no case will your permitting authority grant an extension beyond the date you are required to meet the Tier 2 gasoline sulfur control standard or December 31, 2009, whichever comes first. If you don't comply with the emission limitations and work practice standards for existing catalytic cracking units by the specified date, you will be out-of-compliance with the requirements for catalytic cracking units beginning April 11, 2005.

(iv) A brief description of interim emission control measures that will be taken to ensure proper operation and maintenance of the process equipment during the period of the compliance extension.

(d) If you have an area source that increases its emissions or its potential to emit such that it becomes a major source of HAP, the requirements in paragraphs (d)(1) and (2) of this section apply.

(1) Any portion of the existing facility that is a new affected source or a new reconstructed source must be in compliance with the requirements of this subpart upon startup.

(2) All other parts of the source must be in compliance with the requirements of this subpart by no later than 3 years after it becomes a major source or, if applicable, the extended compliance date granted according to the requirements in paragraph (c) of this section.

(e) You must meet the notification requirements in §63.1574 according to the schedule in §63.1574 and in 40 CFR part 63,

subpart A. Some of the notifications must be submitted before the date you are required to comply with the emission limitations and work practice standards in this subpart.

CATALYTIC CRACKING UNITS, CATALYTIC REFORMING UNITS, SULFUR RECOVERY UNITS, AND BYPASS LINES

§ 63.1564 What are my requirements for metal HAP emissions from catalytic cracking units?

(a) *What emission limitations and work practice standards must I meet?*

You must:

(1) Meet each emission limitation in Table 1 of this subpart that applies to you. If your catalytic cracking unit is subject to the NSPS for PM in §60.102 of this chapter, you must meet the emission limitations for NSPS units. If your catalytic cracking unit isn't subject to the NSPS for PM, you can choose from the four options in paragraphs (a)(1)(i) through (iv) of this section:

(i) You can elect to comply with the NSPS requirements (Option 1);

(ii) You can elect to comply with the PM emission limit (Option 2);

(iii) You can elect to comply with the Nickel (Ni) lb/hr emission limit (Option 3); or

(iv) You can elect to comply with the Ni lb/1,000 lbs of coke burn-off emission limit (Option 4).

(2) Comply with each operating limit in Table 2 of this subpart that applies to you.

(3) Prepare an operation, maintenance, and monitoring plan according to the requirements in §63.1574(f) and operate at all times according to the procedures in the plan.

(4) The emission limitations and operating limits for metal HAP emissions from catalytic cracking units required in paragraphs (a)(1) and (2) of this section do not apply during periods of planned maintenance preapproved by the applicable permitting authority according to the requirements in §63.1575(j).

(b) How do I demonstrate initial compliance with the emission limitations and work practice standard? You must:

(1) Install, operate, and maintain a continuous monitoring system(s) according to the requirements in §63.1572 and Table 3 of this subpart.

(2) Conduct a performance test for each catalytic cracking unit not subject to the NSPS for PM according to the requirements in §63.1571 and under the conditions specified in Table 4 of this subpart.

(3) Establish each site-specific operating limit in Table 2 of this subpart that applies to you according to the procedures in Table 4 of this subpart.

(4) Use the procedures in paragraphs (b)(4)(i) through (iv) of this section to determine initial compliance with the emission limitations.

(i) If you elect Option 1 in paragraph (a)(1)(i) of this section, the NSPS requirements, compute the PM emission rate (lb/1,000 lbs of coke burn-off) for each run using Equations 1, 2, and 3 (if applicable) of this section as follows:

$$R_c = K_1 Q_r(\%CO_2 + \%CO) + K_2 Q_a - K_3 Q_r[(\%CO/2) + \%CO_2 + \%O_2] + K_3 Q_{oxy}(\%O_{xy}) \quad \text{(Eq. 1)}$$

Where: Rc = Coke burn-off rate, kg/hr (lb/hr);

Qr = Volumetric flow rate of exhaust gas from catalyst regenerator before adding air or gas streams. Example: You may measure upstream or downstream of an electrostatic precipitator, but you must measure upstream of a carbon monoxide boiler, dscm/min (dscf/min). You may use the alternative in either § 63.1573(a)(1) or (a)(2), as applicable, to calculate Qr;

Qa = Volumetric flow rate of air to catalytic cracking unit catalyst regenerator, as determined from instruments in the catalytic cracking unit control room, dscm/min (dscf/min);

$\%CO_2$ = Carbon dioxide concentration in regenerator exhaust, percent by volume (dry basis);

%CO = Carbon monoxide concentration in regenerator exhaust, percent by volume (dry basis);

$\%O_2$ = Oxygen concentration in regenerator exhaust, percent by volume (dry basis);

K_1 = Material balance and conversion factor, 0.2982 (kg-min)/(hr-dscm-%) (0.0186 (lb-min)/(hr-dscf-%));

K_2 = Material balance and conversion factor,2.088 (kg-min)/(hr-dscm) (0.1303 (lb-min)/(hr-dscf));

K_3 = Material balance and conversion factor, 0.0994 (kg-min)/(hr-dscm-%)(0.0062 (lb-min)/(hr-dscf-%));

Q_{oxy} = Volumetric flow rate of oxygen-enriched air stream to regenerator, as determined from instruments in the catalytic cracking unit control room, dscm/min (dscf/min); and

$\%O_{xy}$ = Oxygen concentration in oxygen-enriched air stream, percent by volume (dry basis).

$$E = \frac{K \times C_s \times Q_{sd}}{R_c} \quad (Eq.2)$$

Where:

E = Emission rate of PM, kg/1,000 kg (lb/1,000 lb) of coke burn-off;

Cs = Concentration of PM, g/dscm (lb/dscf);

Qsd = Volumetric flow rate of the catalytic cracking unit catalyst regenerator flue gas as measured by Method 2 in appendix A to part 60 of this chapter, dscm/hr (dscf/hr);

Rc = Coke burn-off rate, kg coke/hr (1,000 lb coke/hr); and

K = Conversion factor, 1.0 (kg^2/g)/(1,000 kg) (1,000 lb/(1,000 lb)).

$$E_s = 1.0 + A(H/R_c)K' \quad (Eq.3)$$

Where:

Es = Emission rate of PM allowed, kg/1,000 kg (lb/1,000 lb) of coke burn-off in catalyst regenerator;

1.0 = Emission limitation, kg coke/1,000 kg (lb coke/1,000 lb);

A = Allowable incremental rate of PM emissions, 0.18 g/million cal (0.10 lb/million Btu); and

H = Heat input rate from solid or liquid fossil fuel, million cal/hr (million Btu/hr). Make sure your permitting authority approves procedures for determining the heat input rate.

Rc = Coke burn-off rate, kg coke/hr (1,000 lb coke/hr) determined using Equation 1 of this section; and

K' = Conversion factor to units to standard, 1.0 (kg^2/g)/(1,000 kg) (10^3 lb/(1,000 lb)).

(ii) If you elect Option 2 in paragraph (a)(1)(ii) of this section, the PM emission limit, compute your PM emission rate (lb/1,000 lbs of coke burn-off) using Equations 1 and 2 of this section and your site-specific opacity operating limit (if you use a continuous opacity monitoring system) using Equation 4 of this section as follows:

$$Opacity\ Limit = Opacity_{st} \times \left(\frac{1\ lb/klb\ coke\ burn}{PMEmR_{st}} \right) \quad (Eq.4)$$

Where:

Opacity limit = Maximum permissible hourly average opacity, percent, or 10 percent, whichever is greater;

$Opacity_{st}$ = Hourly average opacity measured during the source test runs, percent; and

$PMEmR_{st}$ = PM emission rate measured during the source test, lb/1,000 lbs coke burn.

$$E_{Nil} = C_{Ni} \times Q_{sd} \quad \text{(Eq. 5)}$$

(iii) If you elect Option 3 in paragraph (a)(1)(iii) of this section, the Ni lb/hr emission

limit, compute your Ni emission rate using Equation 5 of this section and your site-specific Ni operating limit (if you use a continuous opacity monitoring system) using Equations 6 and 7 of this section as follows:

Where:

E_{Ni1} = Mass emission rate of Ni, mg/hr (lb/hr); and

C_{Ni} = Ni concentration in the catalytic cracking unit catalyst regenerator flue gas as measured by Method 29 in appendix A to part 60 of this chapter, mg/dscm (lbs/dscf).

$$Opacity_1 = \frac{13\,g\,Ni/hr}{NiEmR1_{st}} \times Opacity_{st} \qquad (Eq.\,6)$$

Where:

$Opacity_1$ = Opacity value for use in Equation 7 of this section, percent, or 10 percent, whichever is greater; and

$NiEmR1_{st}$ = Average Ni emission rate calculated as the arithmetic average Ni emission rate using Equation 5 of this section for each of the performance test runs, g Ni/hr.

$$Ni\ Operating\ Limit_1 = Opacity_1 \times Q_{mon,st} \times E-Cat_{st} \qquad (Eq.\,7)$$

Where:

Ni Operating $Limit_1$ = Maximum permissible hourly average Ni operating limit, percent-acfm-ppmw, i.e., your site-specific Ni operating limit;

$Q_{mon,st}$ = Hourly average actual gas flow rate as measured by the continuous parameter monitoring system during the performance test or using the alternative procedure in §63.1573, acfm; and

$E\text{-}Cat_{st}$ = Ni concentration on equilibrium catalyst measured during source test, ppmw.

(iv) If you elect Option 4 in paragraph (a)(1)(iv) of this section, the Ni lbs/1,000 lbs of coke burn-off emission limit, compute your Ni emission rate using Equations 1 and 8 of this section and your site-specific Ni operating limit (if you use a continuous opacity monitoring system) using Equations 9 and 10 of this section as follows:

$$E_{Ni_2} = \frac{C_{Ni} \times Q_{sd}}{R_c} \qquad (Eq.\,8)$$

Where:

E_{Ni2} = Normalized mass emission rate of Ni, mg/kg coke (lb/1,000 lbs coke).

$$Opacity_2 = \frac{1.0\ mg/kg\ coke}{NiEmR2_{st}} \times Opacity_{st} \qquad (Eq.\,9)$$

Where:

$Opacity_2$ = Opacity value for use in Equation 10 of this section, percent, or 10 percent, whichever is greater; and

$NiEmR2_{st}$ = Average Ni emission rate calculated as the arithmetic average Ni emission rate using Equation 8 of this section for each of the performance test runs, mg/kg coke.

$$Ni\ Operating\ Limit_2 = Opacity_2 \times E-Cat_{st} \times \frac{Q_{mon,st}}{R_{c,st}} \qquad (Eq.\,10)$$

Where:

Ni operating $limit_2$ = Maximum permissible hourly average Ni operating limit, percent-ppmw-acfm-hr/kg coke, i.e., your site-specific Ni operating limit; and

$R_{c,st}$ = Coke burn rate from Equation 1 of this section, as measured during the initial performance test, kg coke/hr.

(5) Demonstrate initial compliance with each emission limitation that applies to you according to Table 5 of this subpart.

(6) Demonstrate initial compliance with the work practice standard in paragraph (a)(3) of this section by submitting your operation, maintenance, and monitoring plan to your permitting authority as part of your Notification of Compliance Status.

(7) Submit the Notification of Compliance Status containing the results of the initial compliance demonstration according to the requirements in §63.1574.

(c) How do I demonstrate continuous compliance with the emission limitations and work practice standards? You must:

(1) Demonstrate continuous compliance with each emission limitation in Tables 1 and 2 of this subpart that applies to you according to the methods specified in Tables 6 and 7 of this subpart.

(2) Demonstrate continuous compliance with the work practice standard in paragraph (a)(3) of this section by maintaining records to document conformance with the procedures in your operation, maintenance, and monitoring plan.

(3) If you use a continuous opacity monitoring system and elect to comply with Option 3 in paragraph (a)(1)(iii) of this section, determine continuous compliance with your site-specific Ni operating limit by using Equation 11 of this section as follows:

$$Ni\ Operating\ Value_1 = Opacity \times Q_{mon} \times E-Cat \qquad (Eq.\,11)$$

Where:

Ni operating $value_1$ = Maximum permissible hourly average Ni standard operating value, %-acfm-ppmw;

Opacity = Hourly average opacity, percent;

Qmon = Hourly average actual gas flow rate as measured by continuous parameter monitoring system or calculated by alternative procedure in §63.1573, acfm; and

E-Cat = Ni concentration on equilibrium catalyst from weekly or more recent measurement, ppmw.

(4) If you use a continuous opacity monitoring system and elect to comply with

Option 4 in paragraph (a)(1)(iv) of this section, determine continuous compliance with your site-specific Ni operating limit by using Equation 12 of this section as follows:

$$Ni\ Operating\ Value_2 = \frac{Opacity \times E - Cat \times Q_{mon}}{R_c} \qquad (Eq.12)$$

Where:

Ni Operating $Value_2$ = Maximum permissible hourly average Ni standard operating value, percent-acfm-ppmw-hr/kg coke.

[67 FR 17773, Apr. 11, 2002, as amended at 70 FR 6938, Feb. 9, 2005]

§ 63.1565 What are my requirements for organic HAP emissions from catalytic cracking units?

(a) *What emission limitations and work practice standards must I meet?* You must:

(1) Meet each emission limitation in Table 8 of this subpart that applies to you. If your catalytic cracking unit is subject to the NSPS for carbon monoxide (CO) in §60.103 of this chapter, you must meet the emission limitations for NSPS units. If your catalytic cracking unit isn't subject to the NSPS for CO, you can choose from the two options in paragraphs (a)(1)(i) through (ii) of this section:

(i) You can elect to comply with the NSPS requirements (Option 1); or

(ii) You can elect to comply with the CO emission limit (Option 2).

(2) Comply with each site-specific operating limit in Table 9 of this subpart that applies to you.

(3) Prepare an operation, maintenance, and monitoring plan according to the requirements in §63.1574(f) and operate at all times according to the procedures in the plan.

(4) The emission limitations and operating limits for organic HAP emissions from catalytic cracking units required in paragraphs (a)(1) and (2) of this section do not apply during periods of planned maintenance preapproved by the applicable permitting authority according to the requirements in §63.1575(j).

(b) *How do I demonstrate initial compliance with the emission limitations and work practice standards?* You must:

(1) Install, operate, and maintain a continuous monitoring system according to the requirements in §63.1572 and Table 10 of this subpart. Except:

(i) Whether or not your catalytic cracking unit is subject to the NSPS for CO in §60.103 of this chapter, you don't have to install and operate a continuous emission monitoring system if you show that CO emissions from your vent average less than 50 parts per million (ppm), dry basis. You must get an exemption from your permitting authority, based on your written request. To show that the emissions average is less than 50 ppm (dry basis), you must continuously monitor CO emissions for 30 days using a CO continuous emission monitoring system that meets the requirements in §63.1572.

(ii) If your catalytic cracking unit isn't subject to the NSPS for CO, you don't have to install and operate a continuous emission monitoring system or a continuous parameter monitoring system if you vent emissions to a boiler (including a ``CO boiler") or process heater that has a design heat input capacity of at least 44 megawatts (MW).

(iii) If your catalytic cracking unit isn't subject to the NSPS for CO, you don't have to install and operate a continuous emission monitoring system or a continuous parameter monitoring system if you vent emissions to a boiler or process heater in which all vent streams are introduced into the flame zone.

(2) Conduct each performance test for a catalytic cracking unit not subject to the NSPS for CO according to the requirements in §63.1571 and under the conditions specified in Table 11 of this subpart.

(3) Establish each site-specific operating limit in Table 9 of this subpart that applies to you according to the procedures in Table 11 of this subpart.

(4) Demonstrate initial compliance with each emission limitation that applies to you according to Table 12 of this subpart.

(5) Demonstrate initial compliance with the work practice standard in paragraph (a)(3) of this section by submitting the operation, maintenance, and monitoring plan to your permitting authority as part of your Notification of Compliance Status according to §63.1574.

(6) Submit the Notification of Compliance Status containing the results of the initial compliance demonstration according to the requirements in §63.1574.

(c) *How do I demonstrate continuous compliance with the emission limitations and work practice standards?* You must:

(1) Demonstrate continuous compliance with each emission limitation in Tables 8 and 9 of this subpart that applies to you according to the methods specified in Tables 13 and 14 of this subpart.

(2) Demonstrate continuous compliance with the work practice standard in paragraph (a)(3) of this section by complying with the procedures in your operation, maintenance, and monitoring plan.

§ 63.1566 What are my requirements for organic HAP emissions from catalytic reforming units?

(a) *What emission limitations and work practice standards must I meet?* You must:

(1) Meet each emission limitation in Table 15 of this subpart that applies to you. You can choose from the two options in paragraphs (a)(1)(i) through (ii) of this section:

(i) You can elect to vent emissions of total organic compounds (TOC) to a flare that meets the control device requirements in §63.11(b) (Option 1); or

(ii) You can elect to meet a TOC or nonmethane TOC percent reduction standard or concentration limit, whichever is less stringent (Option 2).

(2) Comply with each site-specific operating limit in Table 16 of this subpart that applies to you.

(3) Except as provided in paragraph (a)(4) of this section, the emission limitations in Tables 15 and 16 of this subpart apply to emissions from catalytic reforming unit process vents associated with initial catalyst depressuring and catalyst purging operations that occur prior to the coke burn-off cycle. The emission limitations in Tables 15 and 16 of this subpart do not apply to the coke burn-off, catalyst rejuvenation, reduction or activation vents, or to the control systems used for these vents.

(4) The emission limitations in Tables 15 and 16 of this subpart do not apply to emissions from process vents during depressuring and purging operations when the reactor vent pressure is 5 pounds per square inch gauge (psig) or less.

(5) Prepare an operation, maintenance, and monitoring plan according to the requirements in §63.1574(f) and operate at all times according to the procedures in the plan.

(b) *How do I demonstrate initial compliance with the emission limitations and work practice standard?* You must:

(1) Install, operate, and maintain a continuous monitoring system(s) according to the requirements in §63.1572 and Table 17 of this subpart.

(2) Conduct each performance test for a catalytic reforming unit according to the requirements in §63.1571 and under the conditions specified in Table 18 of this subpart.

(3) Establish each site-specific operating limit in Table 16 of this subpart that applies to you according to the procedures in Table 18 of this subpart.

(4) Use the procedures in paragraph (b)(4)(i) or (ii) of this section to determine initial compliance with the emission limitations.

(i) If you elect the percent reduction standard under Option 2, calculate the emission rate of nonmethane TOC using Equation 1 of this section (if you use Method 25) or Equation 2 of this section (if you use Method 25A or Methods 25A and 18), then calculate the mass emission reduction using Equation 3 of this section as follows:

$$E = K_4 M_c Q_s \qquad (Eq.\ 1)$$

Where:
E = Emission rate of nonmethane TOC in the vent stream, kilograms-C per hour;
K_4 = Constant, 6.0 x 10-5 (kilograms per milligram)(minutes per hour);
M_c = Mass concentration of total gaseous nonmethane organic (as carbon) as measured and calculated using Method 25 in appendix A to part 60 of this chapter, mg/dscm; and
Q_s = Vent stream flow rate, dscm/min, at a temperature of 20 degrees Celsius (C).

$$E = K_5(C_{TOC} - 1/6C_{methane})Q_s \quad (Eq.\ 2)$$

Where:
K_5 = Constant, 1.8 x 10^{-4}(parts per million)$^{-1}$ (gram-mole per standard cubic meter) (gram-C per gram-mole-hexane) (kilogram per gram) (minutes per hour), where the standard temperature (standard cubic meter) is at 20 degrees C (uses 72g-C/g.mole hexane);
C_{TOC} = Concentration of TOC on a dry basis in ppmv as hexane as measured by Method 25A in appendix A to part 60 of this chapter;
$C_{methane}$ = Concentration of methane on a dry basis in ppmv as measured by Method 18 in appendix A to part 60 of this chapter. If the concentration of methane is not determined, assume $C_{methane}$ equals zero; and
Q_s = Vent stream flow rate, dry standard cubic meters per minute, at a temperature of 20 degrees C.

$$\%\ reduction = \frac{E_i - E_o}{E_i} \times 100\% \qquad (Eq.\ 3)$$

Where:
Ei = Mass emission rate of TOC at control device inlet, kg/hr; and
Eo = Mass emission rate of TOC at control device outlet, kg/hr.
(ii) If you elect the 20 parts per million by volume (ppmv) concentration limit, correct the measured TOC concentration for oxygen (O_2) content in the gas stream using Equation 4 of this section as follows:

$$C_{NMTOC,3\%O_2} = \left(C_{TOC} - \tfrac{1}{6}C_{methane}\right)\left(\frac{17.9\%}{20.9\% - \%O_2}\right) \qquad (Eq.\ 4)$$

Where:
$C_{NMTOC,3\%O2}$ = Concentration of nonmethane TOC on a dry basis in ppmv as hexane corrected to 3 percent oxygen.
(5) You are not required to do a TOC performance test if:
(i) You elect to vent emissions to a flare as provided in paragraph (a)(1)(i) of this section (Option 1); or
(ii) You elect the TOC percent reduction or concentration limit in paragraph (a)(1)(ii) of this section (Option 2), and you use a boiler or process heater with a design heat input capacity of 44 MW or greater or a boiler or process heater in which all vent streams are introduced into the flame zone.
(6) Demonstrate initial compliance with each emission limitation that applies to you according to Table 19 of this subpart.
(7) Demonstrate initial compliance with the work practice standard in paragraph (a)(5) of this section by submitting the operation, maintenance, and monitoring plan to your permitting authority as part of your Notification of Compliance Status.
(8) Submit the Notification of Compliance Status containing the results of the initial compliance demonstration according to the requirements in §63.1574.
(c) *How do I demonstrate continuous compliance with the emission limitations and work practice standards?* You must:
(1) Demonstrate continuous compliance with each emission limitation in Tables 15 and 16 of this subpart that applies to you according to the methods specified in Tables 20 and 21 of this subpart.
(2) Demonstrate continuous compliance with the work practice standards in paragraph (a)(3) of this section by complying with the procedures in your operation, maintenance, and monitoring plan.
[67 FR 17773, Apr. 11, 2002, as amended at 70 FR 6938, Feb. 9, 2005]

§ 63.1567 What are my requirements for inorganic HAP emissions from catalytic reforming units?
(a) *What emission limitations and work practice standards must I meet?* You must:
(1) Meet each emission limitation in Table 22 of this subpart that applies to you. If you operate a catalytic reforming unit in which different reactors in the catalytic reforming unit are regenerated in separate regeneration systems, then these emission limitations apply to each separate regeneration system. These emission limitations apply to emissions from catalytic reforming unit process vents associated with the coke burn-off and catalyst rejuvenation operations during coke burn-off and catalyst regeneration. You can choose from the two options in paragraphs (a)(1)(i) through (ii) of this section:
(i) You can elect to meet a percent reduction standard for hydrogen chloride (HCl) emissions (Option 1); or
(ii) You can elect to meet an HCl concentration limit (Option 2).
(2) Meet each site-specific operating limit in Table 23 of this subpart that applies to you. These operating limits apply during coke burn-off and catalyst rejuvenation.
(3) Prepare an operation, maintenance, and monitoring plan according to the requirements in §63.1574(f) and operate at all times according to the procedures in the plan.
(b) *How do I demonstrate initial compliance with the emission limitations and work practice standard?* You must:
(1) Install, operate, and maintain a continuous monitoring system(s) according to the requirements in §63.1572 and Table 24 of this subpart.
(2) Conduct each performance test for a catalytic reforming unit according to the requirements in §63.1571 and the conditions specified in Table 25 of this subpart.
(3) Establish each site-specific operating limit in Table 23 of this subpart that applies to you according to the procedures in Table 25 of this subpart.
(4) Use the equations in paragraphs (b)(4)(i) through (iv) of this section to determine initial compliance with the emission limitations.
(i) Correct the measured HCl concentration for oxygen (O_2) content in the gas stream using Equation 1 of this section as follows:

$$C_{HCl,3\%O_2} = \left(\frac{17.9\%}{20.9\% - \%O_2}\right)C_{HCl} \qquad (Eq.\ 1)$$

Where:

$C_{HCl,3\,O2}$ = Concentration of HCl on a dry basis in ppmv corrected to 3 percent oxygen or 1 ppmv, whichever is greater;

C_{HCl} = Concentration of HCl on a dry basis in ppmv, as measured by Method 26A in 40 CFR part 60, appendix A; and

$\%O_2$ = Oxygen concentration in percent by volume (dry basis).

(ii) If you elect the percent reduction standard, calculate the emission rate of HCl using Equation 2 of this section; then calculate the mass emission reduction from the mass emission rates using Equation 3 of this section as follows:

$$E_{HCl} = K_6 C_{HCl} Q_s \qquad (Eq.\ 2)$$

Where:

E_{HCl} = Emission rate of HCl in the vent stream, grams per hour;

K_6 = Constant, 0.091 (parts per million)$^{-1}$ (grams HCl per standard cubic meter) (minutes per hour), where the standard temperature (standard cubic meter) is at 20 degrees Celsius (C); and

Q_s = Vent stream flow rate, dscm/min, at a temperature of 20 degrees C.

$$HCl\%reduction = \frac{E_{HCl,i} - E_{HCl,o}}{E_{HCl,i}} \times 100\% \qquad (Eq.\ 3)$$

Where:

$E_{HCl,i}$ = Mass emission rate of HCl at control device inlet, g/hr; and

$E_{HCl,o}$ = Mass emission rate of HCl at control device outlet, g/hr.

(iii) If you are required to use a colormetric tube sampling system to demonstrate continuous compliance with the HCl concentration operating limit, calculate the HCl operating limit using Equation 4 of this section as follows.

$$C_{HCl,ppmvLimit} = 0.9 C_{HCL,AveTube} \left(\frac{C_{HCL,RegLimit}}{C_{HCl,3\%O_2}} \right) \qquad (Eq.\ 4)$$

Where:

$C_{HCl,ppmvLimit}$ = Maximum permissible HCl concentration for the HCl concentration operating limit, ppmv;

$C_{HCl,AveTube}$ = Average HCl concentration from the colormetric tube sampling system, calculated as the arithmetic average of the average HCl concentration measured for each performance test run, ppmv or 1 ppmv, whichever is greater; and

$C_{HCl,RegLimit}$ = Maximum permissible outlet HCl concentration for the applicable catalytic reforming unit as listed in Table 22 of this subpart, either 10 or 30 ppmv.

(iv) If you are required to use a colormetric tube sampling system to demonstrate continuous compliance with the percent reduction operating limit, calculate the HCl operating limit using Equation 5 of this section as follows:

$$C_{HCl,\%Limit} = 0.9 C_{HCL,AveTube} \left(\frac{100 - \%HCl\,Reduction_{Limit}}{100 - \%HCl\,Reduction_{Test}} \right) \qquad (Eq.\ 5)$$

Where:

$C_{HCl,\%Limit}$ = Maximum permissible HCl concentration for the percent reduction operating limit, ppmv;

$\%HCl\ Reduction_{Limit}$ = Minimum permissible HCl reduction for the applicable catalytic reforming unit as listed in Table 22 of this subpart, either 97 or 92 percent; and

$\%HCl\ Reduction_{Test}$ = Average percent HCl reduction calculated as the arithmetic average HCl reduction calculated using Equation 3 of this section for each performance source test, percent.

(5) Demonstrate initial compliance with each emission limitation that applies to you according to Table 26 of this subpart.

(6) Demonstrate initial compliance with the work practice standard in paragraph (a)(3) of this section by submitting the operation, maintenance, and monitoring plan to your permitting authority as part of your Notification of Compliance Status.

(7) Submit the Notification of Compliance Status containing the results of the initial compliance demonstration according to the requirements in §63.1574.

(c) *How do I demonstrate continuous compliance with the emission limitations and work practice standard?* You must:

(1) Demonstrate continuous compliance with each emission limitation in Tables 22 and 23 of this subpart that applies to you according to the methods specified in Tables 27 and 28 of this subpart.

(2) Demonstrate continuous compliance with the work practice standard in paragraph (a)(3) of this section by maintaining records to document conformance with the procedures in your operation, maintenance and monitoring plan.

[67 FR 17773, Apr. 11, 2002, as amended at 70 FR 6939, Feb. 9, 2005]

§ 63.1568 What are my requirements for HAP emissions from sulfur recovery units?

(a) *What emission limitations and work practice standard must I meet?* You must:

(1) Meet each emission limitation in Table 29 of this subpart that applies to you. If your sulfur recovery unit is subject to the NSPS for sulfur oxides in §60.104 of this chapter, you must meet the emission limitations for NSPS units. If your sulfur recovery unit isn't subject to the NSPS for sulfur oxides, you can choose from the options in paragraphs (a)(1)(i) through (ii) of this section:

(i) You can elect to meet the NSPS requirements (Option 1); or

(ii) You can elect to meet the total reduced sulfur (TRS) emission limitation (Option 2).

(2) Meet each operating limit in Table 30 of this subpart that applies to you.

(3) Prepare an operation, maintenance, and monitoring plan according to the requirements in §63.1574(f) and operate at all times according to the procedures in the plan.

(b) *How do I demonstrate initial compliance with the emission limitations and work practice standards?* You must:

(1) Install, operate, and maintain a continuous monitoring system according to the requirements in §63.1572 and Table 31 of this subpart.

(2) Conduct each performance test for a sulfur recovery unit not subject to the NSPS for sulfur oxides according to the requirements in §63.1571 and under the conditions specified in Table 32 of this subpart.

(3) Establish each site-specific operating limit in Table 30 of this subpart that applies to you according to the procedures in Table 32 of this subpart.

(4) Correct the reduced sulfur samples to zero percent excess air using Equation 1 of this section as follows.

$$C_{adj} = C_{meas}\left[20.9_c/(20.9 - \%O_2)\right] \qquad (Eq.1)$$

Where:

C_{adj} = pollutant concentration adjusted to zero percent oxygen, ppm or g/dscm;

C_{meas} = pollutant concentration measured on a dry basis, ppm or g/dscm;

20.9c = 20.9 percent oxygen--0.0 percent oxygen (defined oxygen correction basis), percent;

20.9 = oxygen concentration in air, percent;

$\%O_2$ = oxygen concentration measured on a dry basis, percent.

(5) Demonstrate initial compliance with each emission limitation that applies to you according to Table 33 of this subpart.

(6) Demonstrate initial compliance with the work practice standard in paragraph (a)(3) of this section by submitting the operation, maintenance, and monitoring plan to your permitting authority as part of your notification of compliance status.

(7) Submit the notification of compliance status containing the results of the initial compliance demonstration according to the requirements in §63.1574.

(c) *How do I demonstrate continuous compliance with the emission limitations and work practice standards?* You must:

(1) Demonstrate continuous compliance with each emission limitation in Tables 29 and 30of this subpart that applies to you according to the methods specified in Tables 34 and 35 of this subpart.

(2) Demonstrate continuous compliance with the work practice standard in paragraph (a)(3) of this section by complying with the procedures in your operation, maintenance, and monitoring plan.

§ 63.1569 What are my requirements for HAP emissions from bypass lines?

(a) *What work practice standards must I meet?*

(1) You must meet each work practice standard in Table 36 of this subpart that applies to you. You can choose from the four options in paragraphs (a)(1)(i) through (iv) of this section:

(i) You can elect to install an automated system (Option 1);

(ii) You can elect to use a manual lock system (Option 2);

(iii) You can elect to seal the line (Option 3); or

(iv) You can elect to vent to a control device (Option 4).

(2) As provided in §63.6(g), we, the EPA, may choose to grant you permission to use an alternative to the work practice standard in paragraph (a)(1) of this section.

(3) You must prepare an operation, maintenance, and monitoring plan according to the requirements in §63.1574(f) and operate at all times according to the procedures in the plan.

(b) *How do I demonstrate initial compliance with the work practice standards?* You must:

(1) If you elect the option in paragraph (a)(1)(i) of this section, conduct each performance test for a bypass line according to the requirements in §63.1571 and under the conditions specified in Table 37 of this subpart.

(2) Demonstrate initial compliance with each work practice standard in Table 36 of this subpart that applies to you according to Table 38 of this subpart.

(3) Demonstrate initial compliance with the work practice standard in paragraph (a)(3) of this section by submitting the operation, maintenance, and monitoring plan to your permitting authority as part of your notification of compliance status.

(4) Submit the notification of compliance status containing the results of the initial compliance demonstration according to the requirements in §63.1574.

(c) *How do I demonstrate continuous compliance with the work practice standards?* You must:

(1) Demonstrate continuous compliance with each work practice standard in Table 36 of this subpart that applies to you according to the requirements in Table 39 of this subpart.

(2) Demonstrate continuous compliance with the work practice standard in paragraph (a)(2) of this section by complying with the procedures in your operation, maintenance, and monitoring plan.

GENERAL COMPLIANCE REQUIREMENTS

§ 63.1570 What are my general requirements for complying with this subpart?

(a) You must be in compliance with all of the non-opacity standards in this subpart during the times specified in §63.6(f)(1).

(b) You must be in compliance with the opacity and visible emission limits in this subpart during the times specified in §63.6(h)(1).

(c) You must always operate and maintain your affected source, including air pollution control and monitoring equipment, according to the provisions in §63.6(e)(1)(i). During the period between the compliance date specified for your affected source and the date upon which continuous monitoring systems have been installed and validated and any applicable operating limits have been set, you must maintain a log detailing the operation and maintenance of the process and emissions control equipment.

(d) You must develop and implement a written startup, shutdown, and malfunction plan (SSMP) according to the provisions in §63.6(e)(3).

(e) During periods of startup, shutdown, and malfunction, you must operate in accordance with your SSMP.

(f) You must report each instance in which you did not meet each emission limitation and each operating limit in this subpart that applies to you. This includes periods of startup, shutdown, and malfunction. You also must report each instance in which you did not meet the work practice standards in this subpart that apply to you. These instances are deviations from the emission limitations and work practice standards in this subpart. These deviations must be reported according to the requirements in §63.1575.

(g) Consistent with §§63.6(e) and 63.7(e)(1), deviations that occur during a period of startup, shutdown, or malfunction are not violations if you demonstrate to the Administrator's satisfaction that you were operating in accordance with the SSMP. The SSMP must require that good air pollution control practices are used during those periods. The plan must also include elements designed to minimize the frequency of such periods (i.e., root cause analysis). The Administrator will determine whether deviations that occur during a period of startup, shutdown, or malfunction are violations, according to the provisions in §63.6(e) and the contents of the SSMP.

§ 63.1571 How and when do I conduct a performance test or other initial compliance demonstration?

(a) *When must I conduct a performance test?* You must conduct performance tests and report the results by no later than 150 days after the compliance date specified for your source in §63.1563 and according to the provisions in §63.7(a)(2). If you are required to do a performance evaluation or test for a semi-regenerative catalytic reforming unit catalyst regenerator vent, you may do them at the first regeneration cycle after your compliance date and report the results in a followup Notification of Compliance Status report due no later than 50 days after the test.

(1) For each emission limitation or work practice standard where initial compliance is not demonstrated using a performance test, opacity observation, or visible emission observation, you must conduct the initial compliance demonstration within 30 calendar days after the compliance date that is specified for your source in §63.1563.

(2) For each emission limitation where the averaging period is 30 days, the 30-day period for demonstrating initial compliance begins at 12:00 a.m. on the compliance date that is specified for your source in §63.1563 and ends at 11:59 p.m., 30 calendar days after the compliance date that is specified for your source in §63.1563.

(3) If you commenced construction or reconstruction between September 11, 1998 and April 11, 2002, you must demonstrate initial compliance with either the proposed emission limitation or the promulgated

emission limitation no later than October 8, 2002 or within 180 calendar days after startup of the source, whichever is later, according to §63.7(a)(2)(ix).

(4) If you commenced construction or reconstruction between September 11, 1998 and April 11, 2002, and you chose to comply with the proposed emission limitation when demonstrating initial compliance, you must conduct a second compliance demonstration for the promulgated emission limitation by October 10, 2005, or after startup of the source, whichever is later, according to §63.7(a)(2)(ix).

(b) *What are the general requirements for performance test and performance evaluations?* You must:

(1) Conduct each performance test according to the requirements in §63.7(e)(1).

(2) Except for opacity and visible emission observations, conduct three separate test runs for each performance test as specified in §63.7(e)(3). Each test run must last at least 1 hour.

(3) Conduct each performance evaluation according to the requirements in §63.8(e).

(4) Not conduct performance tests during periods of startup, shutdown, or malfunction, as specified in §63.7(e)(1).

(5) Calculate the average emission rate for the performance test by calculating the emission rate for each individual test run in the units of the applicable emission limitation using Equation 2, 5, or 8 of §63.1564, and determining the arithmetic average of the calculated emission rates.

(c) *What procedures must I use for an engineering assessment?* You may choose to use an engineering assessment to calculate the process vent flow rate, net heating value, TOC emission rate, and total organic HAP emission rate expected to yield the highest daily emission rate when determining the emission reduction or outlet concentration for the organic HAP standard for catalytic reforming units. If you use an engineering assessment, you must document all data, assumptions, and procedures to the satisfaction of the applicable permitting authority. An engineering assessment may include the approaches listed in paragraphs (c)(1) through (c)(4) of this section. Other engineering assessments may be used but are subject to review and approval by the applicable permitting authority.

(1) You may use previous test results provided the tests are representative of current operating practices at the process unit, and provided EPA methods or approved alternatives were used;

(2) You may use bench-scale or pilot-scale test data representative of the process under representative operating conditions;

(3) You may use maximum flow rate, TOC emission rate, organic HAP emission rate, or organic HAP or TOC concentration specified or implied within a permit limit applicable to the process vent; or

(4) You may use design analysis based on engineering principles, measurable process parameters, or physical or chemical laws or properties. Examples of analytical methods include, but are not limited to:

(i) Use of material balances based on process stoichiometry to estimate maximum TOC concentrations;

(ii) Calculation of hourly average maximum flow rate based on physical equipment design such as pump or blower capacities; and

(iii) Calculation of TOC concentrations based on saturation conditions.

(d) *Can I adjust the process or control device measured values when establishing an operating limit?* If you do a performance test to demonstrate compliance, you must base the process or control device operating limits for continuous parameter monitoring systems on the results measured during the performance test. You may adjust the values measured during the performance test according to the criteria in paragraphs (d)(1) through (3) of this section.

(1) If you must meet the HAP metal emission limitations in §63.1564, you elect the option in paragraph (a)(1)(iii) in §63.1564 (Ni lb/hr), and you use continuous parameter monitoring systems, you must establish an operating limit for the equilibrium catalyst Ni concentration based on the laboratory analysis of the equilibrium catalyst Ni concentration from the initial performance test. Section 63.1564(b)(2) allows you to adjust the laboratory measurements of the equilibrium catalyst Ni concentration to the maximum level. You must make this adjustment using Equation 1 of this section as follows:

$$Ecat\text{–}Limit = \frac{13\ g\ Ni/hr}{NiEmR1_{st}} \times Ecat_{st} \qquad (Eq.\ 1)$$

Where:

Ecat-Limit = Operating limit for equilibrium catalyst Ni concentration, mg/kg;

$NiEmR1_{st}$ = Average Ni emission rate calculated as the arithmetic average Ni emission rate using Equation 5 of this section for each performance test run, g Ni/hr; and

$Ecat_{st}$ = Average equilibrium Ni concentration from laboratory test results, mg/kg.

(2) If you must meet the HAP metal emission limitations in §63.1564, you elect the option in paragraph (a)(1)(iv) in §63.1564 (Ni lb/1,000 lb of coke burn-off), and you use continuous parameter monitoring systems, you must establish an operating limit for the equilibrium catalyst Ni concentration based on the laboratory analysis of the equilibrium catalyst Ni concentration from the initial performance test. Section 63.1564(b)(2) allows you to adjust the laboratory measurements of the equilibrium catalyst Ni concentration to the maximum level. You must make this adjustment using Equation 2 of this section as follows:

$$Ecat\text{–}Limit = \frac{1.0\ mg/kg\ coke\ burn\text{–}off}{NiEmR2_{st}} \times Ecat_{st} \qquad (Eq.\ 2)$$

Where:

$NiEmR2_{st}$ = Average Ni emission rate calculated as the arithmetic average Ni emission rate using Equation 8 of §63.1564 for each performance test run, mg/kg coke burn-off.

(3) If you choose to adjust the equilibrium catalyst Ni concentration to the maximum level, you can't adjust any other monitored operating parameter (i.e., gas flow rate, voltage, pressure drop, liquid-to-gas ratio).

(4) Except as specified in paragraph (d)(3) of this section, if you use continuous parameter monitoring systems, you may adjust one of your monitored operating parameters (flow rate, voltage and secondary current, pressure drop, liquid-to-gas ratio) from the average of measured values during the performance test to the maximum value (or minimum value, if applicable) representative of worst-case operating conditions, if necessary. This adjustment of measured values may be done using control device design specifications, manufacturer recommendations, or other applicable information. You must provide supporting documentation and rationale in your Notification of Compliance Status, demonstrating to the satisfaction of your permitting authority, that your affected source complies with the applicable emission limit at the operating limit based on adjusted values.

(e) *Can I change my operating limit?* You may change the established operating limit by meeting the requirements in paragraphs (e)(1) through (3) of this section.

(1) You may change your established operating limit for a continuous parameter monitoring system by doing an additional performance test, a performance test in

conjunction with an engineering assessment, or an engineering assessment to verify that, at the new operating limit, you are incompliance with the applicable emission limitation.

(2) You must establish a revised operating limit for your continuous parameter monitoring system if you make any change in process or operating conditions that could affect control system performance or you change designated conditions after the last performance or compliance tests were done. You can establish the revised operating limit as described in paragraph (e)(1) of this section.

(3) You may change your site-specific opacity operating limit or Ni operating limit only by doing a new performance test.

§ 63.1572 What are my monitoring installation, operation, and maintenance requirements?

(a) You must install, operate, and maintain each continuous emission monitoring system according to the requirements in paragraphs (a)(1) through (4) of this section.

(1) You must install, operate, and maintain each continuous emission monitoring system according to the requirements in Table 40 of this subpart.

(2) If you use a continuous emission monitoring system to meet the NSPS CO or SO_2 limit, you must conduct a performance evaluation of each continuous emission monitoring system according to the requirements in §63.8 and Table 40 of this subpart. This requirement does not apply to an affected source subject to the NSPS that has already demonstrated initial compliance with the applicable performance specification.

(3) As specified in §63.8(c)(4)(ii), each continuous emission monitoring system must complete a minimum of one cycle of operation (sampling, analyzing, and data recording) for each successive 15-minute period.

(4) Data must be reduced as specified in §63.8(g)(2).

(b) You must install, operate, and maintain each continuous opacity monitoring system according to the requirements in paragraphs (b)(1) through (3) of this section.

(1) Each continuous opacity monitoring system must be installed, operated, and maintained according to the requirements in Table 40 of this subpart.

(2) If you use a continuous opacity monitoring system to meet the NSPS opacity limit, you must conduct a performance evaluation of each continuous opacity monitoring system according to the requirements in §63.8 and Table 40 of this subpart. This requirement does not apply to an affected source subject to the NSPS that has already demonstrated initial compliance with the applicable performance specification.

(3) As specified in §63.8(c)(4)(i), each continuous opacity monitoring system must complete a minimum of one cycle of sampling and analyzing for each successive 10-second period and one cycle of data recording for each successive 6-minute period.

(c) You must install, operate, and maintain each continuous parameter monitoring system according to the requirements in paragraphs (c)(1) through (5) of this section.

(1) The owner or operator shall install, operate, and maintain each continuous parameter monitoring system in a manner consistent with the manufacturer's specifications or other written procedures that provide adequate assurance that the equipment will monitor accurately. The owner or operator shall also meet the equipment specifications in Table 41 of this subpart if pH strips or colormetric tube sampling systems are used.

(2) The continuous parameter monitoring system must complete a minimum of one cycle of operation for each successive 15-minute period. You must have a minimum of four successive cycles of operation to have a valid hour of data (or at least two if a calibration check is performed during that hour or if the continuous parameter monitoring system is out-of-control).

(3) Each continuous parameter monitoring system must have valid hourly average data from at least 75 percent of the hours during which the process operated.

(4) Each continuous parameter monitoring system must determine and record the hourly average of all recorded readings and if applicable, the daily average of all recorded readings for each operating day. The daily average must cover a 24-hour period if operation is continuous or the number of hours of operation per day if operation is not continuous.

(5) Each continuous parameter monitoring system must record the results of each inspection, calibration, and validation check.

(d) You must monitor and collect data according to the requirements in paragraphs (d)(1) and (2) of this section.

(1) Except for monitoring malfunctions, associated repairs, and required quality assurance or control activities (including as applicable, calibration checks and required zero and span adjustments), you must conduct all monitoring in continuous operation (or collect data at all required intervals) at all times the affected source is operating.

(2) You may not use data recorded during monitoring malfunctions, associated repairs, and required quality assurance or control activities for purposes of this regulation, including data averages and calculations, for fulfilling a minimum data availability requirement, if applicable. You must use all the data collected during all other periods in assessing the operation of the control device and associated control system.

§ 63.1573 What are my monitoring alternatives?

(a) *What are the approved alternatives for measuring gas flow rate?*

(1) You may use this alternative to a continuous parameter monitoring system for the catalytic regenerator exhaust gas flow rate for your catalytic cracking unit if the unit does not introduce any other gas streams into the catalyst regeneration vent (i.e., complete combustion units with no additional combustion devices). You may also use this alternative to a continuous parameter monitoring system for the catalytic regenerator atmospheric exhaust gas flow rate for your catalytic reforming unit during the coke burn and rejuvenation cycles if the unit operates as a constant pressure system during these cycles. If you use this alternative, you shall use the same procedure for the performance test and for monitoring after the performance test. You shall:

(i) Install and operate a continuous parameter monitoring system to measure and record the hourly average volumetric air flow rate to the catalytic cracking unit or catalytic reforming unit regenerator. Or, you may determine and record the hourly average volumetric air flow rate to the catalytic cracking unit or catalytic reforming unit regenerator using the appropriate control room instrumentation.

(ii) Install and operate a continuous parameter monitoring system to measure and record the temperature of the gases entering the control device (or exiting the catalyst regenerator if you do not use an add-on control device).

(iii) Calculate and record the hourly average actual exhaust gas flow rate using Equation 1 of this section as follows:

$$Q_{gas} = (1.12\ scfm/dscfm) \times (Q_{air} + Q_{other}) \times \left(\frac{Temp_{gas}}{293°K}\right) \times \left(\frac{1\ atm}{P_{vent}}\right) \qquad (Eq.1)$$

Where:

Q_{gas} = Hourly average actual gas flow rate, acfm;

1.12 = Default correction factor to convert gas flow from dry standard cubic feet per minute (dscfm) to standard cubic feet per minute (scfm);

Q_{air} = Volumetric flow rate of air to regenerator, as determined from the control room instrumentations, dscfm;

Q_{oxy} = Volumetric flow rate of other gases entering the regenerator as determined from the control room instrumentations, dscfm. (Examples of "other" gases include an oxygen-enriched air stream to catalytic cracking unit regenerators and a nitrogen

stream to catalytic reforming unit regenerators.);

$Temp_{gas}$ = Temperature of gas stream in vent measured as near as practical to the control device or opacity monitor, deg.K. For wet scrubbers, temperature of gas prior to the wet scrubber; and

P_{vent} = Absolute pressure in the vent measured as near as practical to the control device or opacity monitor, as applicable, atm. When used to assess the gas flow rate in the final atmospheric vent stack, you can assume P_{vent} = 1 atm.

2) You may use this alternative to calculating Q_r, the volumetric flow rate of exhaust gas for the catalytic cracking regenerator as required in Equation 1 of § 63.1564, if you have a gas analyzer installed in the catalytic cracking regenerator exhaust vent prior to the addition of air or other gas streams. You may measure upstream or downstream of an electrostatic precipitator, but you shall measure upstream of a carbon monoxide boiler. You shall:

(i) Install and operate a continuous parameter monitoring system to measure and record the hourly average volumetric air flow rate to the catalytic cracking unit regenerator. Or, you can determine and record the hourly average volumetric air flow rate to the catalytic cracking unit regenerator using the catalytic cracking unit control room instrumentation.

(ii) Install and operate a continuous gas analyzer to measure and record the concentration of carbon dioxide, carbon monoxide, and oxygen of the catalytic cracking regenerator exhaust.

(iii) Calculate and record the hourly average flow rate using Equation 2 of this section as follows:

$$Q_r = \frac{79 \times Q_{air} + (100 - \%O_{xy}) \times Q_{oxy}}{100 - \%CO_2 - \%CO - \%O_2} \qquad (Eq.\ 2)$$

Where:

Q_r = Volumetric flow rate of exhaust gas from the catalyst regenerator before adding air or gas streams, dscm/min (dscf/min);

79 = Default concentration of nitrogen and argon in dry air, percent by volume (dry basis);

$\%O_{xy}$ = Oxygen concentration in oxygen-enriched air stream, percent by volume (dry basis);

Q_{oxy} = Volumetric flow rate of oxygen-enriched air stream to regenerator as determined from the catalytic cracking unit control room instrumentations, dscm/min (dscf/min);

$\%CO_2$ = Carbon dioxide concentration in regenerator exhaust, percent by volume (dry basis);

CO = Carbon monoxide concentration in regenerator exhaust, percent by volume (dry basis); and

$\%O_2$ = Oxygen concentration in regenerator exhaust, percent by volume (dry basis).

(b) *What is the approved alternative for monitoring pH or alkalinity levels?* You may use the alternative in paragraph (b)(1) or (2) of this section for a catalytic reforming unit.

(1) You shall measure and record the pH of the water (or scrubbing liquid) exiting the wet scrubber or internal scrubbing system at least once an hour during coke burn-off and catalyst rejuvenation using pH strips as an alternative to a continuous parameter monitoring system. The pH strips must meet the requirements in Table 41 of this subpart.

(2) You shall measure and record the alkalinity of the water (or scrubbing liquid) exiting the wet scrubber or internal scrubbing system at least once an hour during coke burn-off and catalyst rejuvenation using titration as an alternative to a continuous parameter monitoring system.

(c) *Can I use another type of monitoring system?* You may request approval from your permitting authority to use an automated data compression system. An automated data compression system does not record monitored operating parameter values at a set frequency (e.g., once every hour) but records all values that meet set criteria for variation from previously recorded values. Your request must contain a description of the monitoring system and data recording system, including the criteria used to determine which monitored values are recorded and retained, the method for calculating daily averages, and a demonstration that the system meets all of the criteria in paragraphs (c)(1) through (5) of this section:

(1) The system measures the operating parameter value at least once every hour;

(2) The system records at least 24 values each day during periods of operation;

(3) The system records the date and time when monitors are turned off or on;

(4) The system recognizes unchanging data that may indicate the monitor is not functioning properly, alerts the operator, and records the incident; and

(5) The system computes daily average values of the monitored operating parameter based on recorded data.

(d) *Can I monitor other process or control device operating parameters?* You may request approval to monitor parameters other than those required in this subpart. You must request approval if:

(1) You use a control device other than a thermal incinerator, boiler, process heater, flare, electrostatic precipitator, or wet scrubber;

(2) You use a combustion control device (e.g., incinerator, flare, boiler or process heater with a design heat capacity of at least 44 MW, boiler or process heater where the vent stream is introduced into the flame zone), electrostatic precipitator, or scrubber but want to monitor a parameter other than those specified; or

(3) You wish to use another type of continuous emission monitoring system that provides direct measurement of a pollutant (i.e., a PM or multi-metals HAP continuous emission monitoring system, a carbonyl sulfide/carbon disulfide continuous emission monitoring system, a TOC continuous emission monitoring system, or HCl continuous emission monitoring system).

(e) *How do I request to monitor alternative parameters?* You must submit a request for review and approval or disapproval to the Administrator. The request must include the information in paragraphs (e)(1) through (5) of this section.

(1) A description of each affected source and the parameter(s) to be monitored to determine whether the affected source will continuously comply with the emission limitations and an explanation of the criteria used to select the parameter(s).

(2) A description of the methods and procedures that will be used to demonstrate that the parameter can be used to determine whether the affected source will continuously comply with the emission limitations and the schedule for this demonstration. You must certify that you will establish an operating limit for the monitored parameter(s) that represents the conditions in existence when the control device is being properly operated and maintained to meet the emission limitation.

(3) The frequency and content of monitoring, recording, and reporting, if monitoring and recording are not continuous. You also must include the rationale for the proposed monitoring, recording, and reporting requirements.

(4) Supporting calculations.

(5) Averaging time for the alternative operating parameter.

(f) *How do I apply for alternative monitoring requirements if my catalytic cracking unit is equipped with a wet scrubber and I have approved alternative monitoring requirements under the new source performance standards for petroleum refineries?*

(1) You may request alternative monitoring requirements according to the procedures in this paragraph if you meet each of the conditions in paragraphs (f)(1)(i) through (iii) of this section:

(i) Your fluid catalytic cracking unit regenerator vent is subject to the PM limit in 40 CFR 60.102(a)(1) and uses a wet scrubber for PM emissions control;

(ii) You have alternative monitoring requirements for the continuous opacity monitoring system requirement in 40 CFR 60.105(a)(1) approved by the Administrator; and

(iii) You are required by this subpart to install, operate, and maintain a continuous opacity monitoring system for the same catalytic cracking unit regenerator vent for which you have approved alternative monitoring requirements.

(2) You can request approval to use an alternative monitoring method prior to submitting your notification of compliance status, in your notification of compliance status, or at any time.

(3) You must submit a copy of the approved alternative monitoring requirements along with a monitoring plan that includes a description of the continuous monitoring system or method, including appropriate operating parameters that will be monitored, test results demonstrating compliance with the opacity limit used to establish an enforceable operating limit(s), and the frequency of measuring and recording to establish continuous compliance. If applicable, you must also include operation and maintenance requirements for the continuous monitoring system.

(4) We will contact you within 30 days of receipt of your application to inform you of approval or of our intent to disapprove your request.

[67 FR 17773, Apr. 11, 2002, as amended at 70 FR 6940, Feb. 9, 2005]

NOTIFICATIONS, REPORTS, AND RECORDS

§ 63.1574 What notifications must I submit and when?

(a) Except as allowed in paragraphs (a)(1) through (3) of this section, you must submit all of the notifications in §§63.6(h), 63.7(b) and (c), 63.8(e), 63.8(f)(4), 63.8(f)(6), and 63.9(b) through (h) that apply to you by the dates specified.

(1) You must submit the notification of your intention to construct or reconstruct according to §63.9(b)(5) unless construction or reconstruction had commenced and initial startup had not occurred before April 11, 2002. In this case, you must submit the notification as soon as practicable before startup but no later than July 10, 2002. This deadline also applies to the application for approval of construction or reconstruction and approval of construction or reconstruction based on State preconstruction review required in §§63.5(d)(1)(i) and 63.5(f)(2).

(2) You must submit the notification of intent to conduct a performance test required in §63.7(b) at least 30 calendar days before the performance test is scheduled to begin(instead of 60 days).

(3) If you are required to conduct a performance test, performance evaluation, design evaluation, opacity observation, visible emission observation, or other initial compliance demonstration, you must submit a notification of compliance status according to §63.9(h)(2)(ii). You can submit this information in an operating permit application, in an amendment to an operating permit application, in a separate submission, or in any combination. In a State with an approved operating permit program where delegation of authority under section 112(l) of the CAA has not been requested or approved, you must provide a duplicate notification to the applicable Regional Administrator. If the required information has been submitted previously, you do not have to provide a separate notification of compliance status. Just refer to the earlier submissions instead of duplicating and resubmitting the previously submitted information.

(i) For each initial compliance demonstration that does not include a performance test, you must submit the Notification of Compliance Status no later than 30 calendar days following completion of the initial compliance demonstration.

(ii) For each initial compliance demonstration that includes a performance test, you must submit the notification of compliance status, including the performance test results, no later than 150 calendar days after the compliance date specified for your affected source in §63.1563.

(b) As specified in §63.9(b)(2), if you startup your new affected source before April 11, 2002, you must submit the initial notification no later than August 9, 2002.

(c) If you startup your new or reconstructed affected source on or after April 11, 2002, you must submit the initial notification no later than 120 days after you become subject to this subpart.

(d) You also must include the information in Table 42 of this subpart in your notification of compliance status.

(e) If you request an extension of compliance for an existing catalytic cracking unit as allowed in §63.1563(c), you must submit a notification to your permitting authority containing the required information by October 13, 2003.

(f) As required by this subpart, you must prepare and implement an operation, maintenance, and monitoring plan for each control system and continuous monitoring system for each affected source. The purpose of this plan is to detail the operation, maintenance, and monitoring procedures you will follow.

(1) You must submit the plan to your permitting authority for review and approval along with your notification of compliance status. While you do not have to include the entire plan in your part 70 or 71 permit, you must include the duty to prepare and implement the plan as an applicable requirement in your part 70 or 71 operating permit. You must submit any changes to your permitting authority for review and approval and comply with the plan until the change is approved.

(2) Each plan must include, at a minimum, the information specified in paragraphs (f)(2)(i) through (xii) of this section.

(i) Process and control device parameters to be monitored for each affected source, along with established operating limits.

(ii) Procedures for monitoring emissions and process and control device operating parameters for each affected source.

(iii) Procedures that you will use to determine the coke burn-rate, the volumetric flow rate (if you use process data rather than direct measurement), and the rate of combustion of liquid or solid fossil fuels if you use an incinerator-waste heat boiler to burn the exhaust gases from a catalyst regenerator.

(iv) Procedures and analytical methods you will use to determine the equilibrium catalyst Ni concentration, the equilibrium catalyst Ni concentration monthly rolling average, and the hourly or hourly average Ni operating value.

(v) Procedures you will use to determine the pH of the water (or scrubbing liquid) exiting a wet scrubber if you use pH strips.

(vi) Procedures you will use to determine the HCl concentration of gases from a catalytic reforming unit when you use a colormetric tube sampling system, including procedures for correcting for pressure (if applicable to the sampling equipment) and the sampling locations that will be used for compliance monitoring purposes.

(vii) Procedures you will use to determine the gas flow rate for a catalytic cracking unit if you use the alternative procedure based on air flow rate and temperature.

(viii) Monitoring schedule, including when you will monitor and when you will not monitor an affected source (e.g., during the coke burn-off, regeneration process).

(ix) Quality control plan for each continuous opacity monitoring system and continuous emission monitoring system you use to meet an emission limit in this subpart. This plan must include procedures you will use for calibrations, accuracy audits, and adjustments to the system needed to meet applicable requirements for the system.

(x) Maintenance schedule for each monitoring system and control device for each affected source that is generally consistent with the manufacturer's instructions for routine and long-term maintenance.

(xi) If you use a fixed-bed gas-solid adsorption system to control emissions from a catalytic reforming unit, you must implement corrective action procedures if the HCl concentration measured at the selected compliance monitoring sampling location within the bed exceeds the operating limit. These procedures must require, at minimum, repeat measurement and recording of the HCl concentration in the adsorption system exhaust gases and at the selected compliance monitoring sampling location within the bed. If the HCl concentration at the selected compliance

monitoring location within the bed is above the operating limit during the repeat measurement while the HCl concentration in the adsorption system exhaust gases remains below the operating limit, the adsorption bed must be replaced as soon as practicable. Your procedures must specify the sampling frequency that will be used to monitor the HCl concentration in the adsorption system exhaust gases subsequent to the repeat measurement and prior to replacement of the sorbent material (but not less frequent than once every 4 hours during coke burn-off). If the HCl concentration of the adsorption system exhaust gases is above the operating limit when measured at any time, the adsorption bed must be replaced within 24 hours or before the next regeneration cycle, whichever is longer.

(xii) Procedures that will be used for purging the catalyst if you do not use a control device to comply with the organic HAP emission limits for catalytic reforming units. These procedures will include, but are not limited to, specification of the minimum catalyst temperature and the minimum cumulative volume of gas per mass of catalyst used for purging prior to uncontrolled releases (i.e., during controlled purging events); the maximum purge gas temperature for uncontrolled purge events; and specification of the monitoring systems that will be used to monitor and record data during each purge event.

[67 FR 17773, Apr. 11, 2002, as amended at 70 FR 6941, Feb. 9, 2005]

§ 63.1575 What reports must I submit and when?

(a) You must submit each report in Table 43 of this subpart that applies to you.

(b) Unless the Administrator has approved a different schedule, you must submit each report by the date in Table 43 of this subpart and according to the requirements in paragraphs (b)(1) through (5) of this section.

(1) The first compliance report must cover the period beginning on the compliance date that is specified for your affected source in §63.1563 and ending on June 30 or December 31, whichever date is the first date following the end of the first calendar half after the compliance date that is specified for your affected source in §63.1563.

(2) The first compliance report must be postmarked or delivered no later than July 31 or January 31, whichever date follows the end of the first calendar half after the compliance date that is specified for your affected source in §63.1563.

(3) Each subsequent compliance report must cover the semiannual reporting period from January 1 through June 30 or the semiannual reporting period from July 1 through December 31.

(4) Each subsequent compliance report must be postmarked or delivered no later than July 31 or January 31, whichever date is the first date following the end of the semiannual reporting period.

(5) For each affected source that is subject to permitting regulations pursuant to part 70 or 71 of this chapter, and if the permitting authority has established dates for submitting semiannual reports pursuant to §70.6(a)(3)(iii)(A) or §71.6(a)(3)(iii)(A) of this chapter, you may submit the first and subsequent compliance reports according to the dates the permitting authority has established instead of according to the dates in paragraphs (b)(1) through (4) of this section.

(c) The compliance report must contain the information required in paragraphs (c)(1) through (4) of this section.

(1) Company name and address.

(2) Statement by a responsible official, with that official's name, title, and signature, certifying the accuracy of the content of the report.

(3) Date of report and beginning and ending dates of the reporting period.

(4) If there are no deviations from any emission limitation that applies to you and there are no deviations from the requirements for work practice standards, a statement that there were no deviations from the emission limitations or work practice standards during the reporting period and that no continuous emission monitoring system or continuous opacity monitoring system was inoperative, inactive, malfunctioning, out-of-control, repaired, or adjusted.

(d) For each deviation from an emission limitation and for each deviation from the requirements for work practice standards that occurs at an affected source where you are not using a continuous opacity monitoring system or a continuous emission monitoring system to comply with the emission limitation or work practice standard in this subpart, the compliance report must contain the information in paragraphs (c)(1) through (3) of this section and the information in paragraphs (d)(1) through (3) of this section.

(1) The total operating time of each affected source during the reporting period.

(2) Information on the number, duration, and cause of deviations (including unknown cause, if applicable), as applicable, and the corrective action taken.

(3) Information on the number, duration, and cause for monitor downtime incidents (including unknown cause, if applicable, other than downtime associated with zero and span and other daily calibration checks).

(e) For each deviation from an emission limitation occurring at an affected source where you are using a continuous opacity monitoring system or a continuous emission monitoring system to comply with the emission limitation, you must include the information in paragraphs (d)(1) through (3) of this section and the information in paragraphs (e)(1) through (13) of this section.

(1) The date and time that each malfunction started and stopped.

(2) The date and time that each continuous opacity monitoring system or continuous emission monitoring system was inoperative, except for zero (low-level) and high-level checks.

(3) The date and time that each continuous opacity monitoring system or continuous emission monitoring system was out-of-control, including the information in §63.8(c)(8).

(4) The date and time that each deviation started and stopped, and whether each deviation occurred during a period of startup, shutdown, or malfunction or during another period.

(5) A summary of the total duration of the deviation during the reporting period (recorded in minutes for opacity and hours for gases and in the averaging period specified in the regulation for other types of emission limitations), and the total duration as a percent of the total source operating time during that reporting period.

(6) A breakdown of the total duration of the deviations during the reporting period and into those that are due to startup, shutdown, control equipment problems, process problems, other known causes, and other unknown causes.

(7) A summary of the total duration of downtime for the continuous opacity monitoring system or continuous emission monitoring system during the reporting period (recorded in minutes for opacity and hours for gases and in the averaging time specified in the regulation for other types of standards), and the total duration of downtime for the continuous opacity monitoring system or continuous emission monitoring system as a percent of the total source operating time during that reporting period.

(8) A breakdown of the total duration of downtime for the continuous opacity monitoring system or continuous emission monitoring system during the reporting period into periods that are due to monitoring equipment malfunctions, non-monitoring equipment malfunctions, quality assurance/quality control calibrations, other known causes, and other unknown causes.

(9) An identification of each HAP that was monitored at the affected source.

(10) A brief description of the process units.

(11) The monitoring equipment manufacturer(s) and model number(s).

(12) The date of the latest certification or audit for the continuous opacity monitoring system or continuous emission monitoring system.

(13) A description of any change in the continuous emission monitoring system or continuous opacity monitoring system, processes, or controls since the last reporting period.

(f) You also must include the information required in paragraphs (f)(1) through (2) of this section in each compliance report, if applicable.

(1) A copy of any performance test done during the reporting period on any affected unit. The report may be included in the next

semiannual report. The copy must include a complete report for each test method used for a particular kind of emission point tested. For additional tests performed for a similar emission point using the same method, you must submit the results and any other information required, but a complete test report is not required. A complete test report contains a brief process description; a simplified flow diagram showing affected processes, control equipment, and sampling point locations; sampling site data; description of sampling and analysis procedures and any modifications to standard procedures; quality assurance procedures; record of operating conditions during the test; record of preparation of standards; record of calibrations; raw data sheets for field sampling; raw data sheets for field and laboratory analyses; documentation of calculations; and any other information required by the test method.

(2) Any requested change in the applicability of an emission standard (e.g., you want to change from the PM standard to the Ni standard for catalytic cracking units or from the HCl concentration standard to percent reduction for catalytic reforming units) in your periodic report. You must include all information and data necessary to demonstrate compliance with the new emission standard selected and any other associated requirements.

(g) You may submit reports required by other regulations in place of or as part of the compliance report if they contain the required information.

(h) The reporting requirements in paragraphs (h)(1) and (2) of this section apply to startups, shutdowns, and malfunctions:

(1) When actions taken to respond are consistent with the plan, you are not required to report these events in the semiannual compliance report and the reporting requirements in §§63.6(e)(3)(iii) and 63.10(d)(5) do not apply.

(2) When actions taken to respond are not consistent with the plan, you must report these events and the response taken in the semiannual compliance report. In this case, the reporting requirements in §§63.6(e)(3)(iv) and 63.10(d)(5) do not apply.

(i) If the applicable permitting authority has approved a period of planned maintenance for your catalytic cracking unit according to the requirements in paragraph (j) of this section, you must include the following information in your compliance report.

(1) In the compliance report due for the 6-month period before the routine planned maintenance is to begin, you must include a full copy of your written request to the applicable permitting authority and written approval received from the applicable permitting authority.

(2) In the compliance report due after the routine planned maintenance is complete, you must include a description of the planned routine maintenance that was performed for the control device during the previous 6-month period, and the total number of hours during those 6 months that the control device did not meet the emission limitations and monitoring requirements as a result of the approved routine planned maintenance.

(j) If you own or operate multiple catalytic cracking units that are served by a single wet scrubber emission control device (e.g., a Venturi scrubber), you may request the applicable permitting authority to approve a period of planned routine maintenance for the control device needed to meet requirements in your operation, maintenance, and monitoring plan. You must present data to the applicable permitting authority demonstrating that the period of planned maintenance results in overall emissions reductions. During this pre-approved time period, the emission control device may be taken out of service while maintenance is performed on the control device and/or one of the process units while the remaining process unit(s) continue to operate. During the period the emission control device is unable to operate, the emission limits, operating limits, and monitoring requirements applicable to the unit that is operating and the wet scrubber emission control device do not apply. The applicable permitting authority may require that you take specified actions to minimize emissions during the period of planned maintenance.

(1) You must submit a written request to the applicable permitting authority at least 6 months before the planned maintenance is scheduled to begin with a copy to the EPA Regional Administrator.

(2) Your written request must contain the information in paragraphs (j)(2)(i) through (v) of this section.

(i) A description of the planned routine maintenance to be performed during the next 6 months and why it is necessary.

(ii) The date the planned maintenance will begin and end.

(iii) A quantified estimate of the HAP and criteria pollutant emissions that will be emitted during the period of planned maintenance.

(iv) An analysis showing the emissions reductions resulting from the planned maintenance as opposed to delaying the maintenance until the next unit turnaround.

(v) Actions you will take to minimize emissions during the period of planned maintenance.

§ 63.1576 What records must I keep, in what form, and for how long?

(a) You must keep the records specified in paragraphs (a)(1) through (3) of this section.

(1) A copy of each notification and report that you submitted to comply with this subpart, including all documentation supporting any initial notification or Notification of Compliance Status that you submitted, according to the requirements in §63.10(b)(2)(xiv).

(2) The records in §63.6(e)(3)(iii) through (v) related to startup, shutdown, and malfunction.

(3) Records of performance tests, performance evaluations, and opacity and visible emission observations as required in §63.10(b)(2)(viii).

(b) For each continuous emission monitoring system and continuous opacity monitoring system, you must keep the records required in paragraphs (b)(1) through (5) of this section.

(1) Records described in §63.10(b)(2)(vi) through (xi).

(2) Monitoring data for continuous opacity monitoring systems during a performance evaluation as required in §63.6(h)(7)(i) and (ii).

(3) Previous (i.e., superceded) versions of the performance evaluation plan as required in§63.8(d)(3).

(4) Requests for alternatives to the relative accuracy test for continuous emission monitoring systems as required in §63.8(f)(6)(i).

(5) Records of the date and time that each deviation started and stopped, and whether the deviation occurred during a period of startup, shutdown, or malfunction or during another period.

(c) You must keep the records in §63.6(h) for visible emission observations.

(d) You must keep records required by Tables 6, 7, 13, and 14 of this subpart (for catalytic cracking units); Tables 20, 21, 27 and 28 of this subpart (for catalytic reforming units); Tables 34 and 35 of this subpart (for sulfur recovery units); and Table 39 of this subpart (for bypass lines) to show continuous compliance with each emission limitation that applies to you.

(e) You must keep a current copy of your operation, maintenance, and monitoring plan onsite and available for inspection. You also must keep records to show continuous compliance with the procedures in your operation, maintenance, and monitoring plan.

(f) You also must keep the records of any changes that affect emission control system performance including, but not limited to, the location at which the vent stream is introduced into the flame zone for a boiler or process heater.

(g) Your records must be in a form suitable and readily available for expeditious review according to §63.10(b)(1).

(h) As specified in §63.10(b)(1), you must keep each record for 5 years following the date of each occurrence, measurement, maintenance, corrective action, report, or record.

(i) You must keep each record on site for at least 2 years after the date of each occurrence, measurement, maintenance, corrective action, report, or record,

according to §63.10(b)(1). You can keep the records offsite for the remaining 3 years.

OTHER REQUIREMENTS AND INFORMATION

§ 63.1577 What parts of the General Provisions apply to me?

Table 44 of this subpart shows which parts of the General Provisions in §§63.1 through 63.15 apply to you.

§ 63.1578 Who implements and enforces this subpart?

(a) This subpart can be implemented and enforced by us, the U.S. EPA, or a delegated authority such as your State, local, or tribal agency. If the U.S. EPA Administrator has delegated authority to your State, local, or tribal agency, then that Agency has the authority to implement and enforce this subpart. You should contact your U.S. EPA Regional Office to find out if this subpart is delegated to your State, local, or tribal agency.

(b) In delegating implementation and enforcement authority of this subpart to a State, local, or tribal agency under 40 CFR part 63, subpart E, the authorities contained in paragraph (c) of this section are retained by the Administrator of the U.S. EPA and are not transferred to the State, local, or tribal agency.

(c) The authorities that will not be delegated to State, local, or tribal agencies are listed in paragraphs (c)(1) through (5) of this section.

(1) Approval of alternatives to the non-opacity emission limitations and work practice standards in §§63.1564 through 63.1569 under §63.6(g).

(2) Approval of alternative opacity emission limitations in §§63.1564 through 63.1569 under §63.6(h)(9).

(3) Approval of major alternatives to test methods under §63.7(e)(2)(ii) and (f) and as defined in §63.90.

(4) Approval of major alternatives to monitoring under §63.8(f) and as defined in §63.90.

(5) Approval of major alternatives to recordkeeping and reporting under §63.10(f) and as defined in §63.90.

§ 63.1579 What definitions apply to this subpart?

Terms used in this subpart are defined in the Clean Air Act (CAA), in 40 CFR 63.2, the General Provisions of this part (§§63.1 through 63.15), and in this section as listed.

Boiler means any enclosed combustion device that extracts useful energy in the form of steam and is not an incinerator.

Catalytic cracking unit means a refinery process unit in which petroleum derivatives are continuously charged; hydrocarbon molecules in the presence of a catalyst suspended in a fluidized bed are fractured into smaller molecules, or react with a contact material suspended in a fluidized bed to improve feedstock quality for additional processing; and the catalyst or contact material is continuously regenerated by burning off coke and other deposits The unit includes, but is not limited to, the riser, reactor, regenerator, air blowers, spent catalyst or contact material stripper, catalyst or contact material recovery equipment, and regenerator equipment for controlling air pollutant emissions and equipment used for heat recovery.

Catalytic cracking unit catalyst regenerator means one or more regenerators (multiple regenerators) which comprise that portion of the catalytic cracking unit in which coke burn-off and catalyst or contact material regeneration occurs and includes the regenerator combustion air blower(s).

Catalytic reforming unit means a refinery process unit that reforms or changes the chemical structure of naphtha into higher octane aromatics through the use of a metal catalyst and chemical reactions that include dehydrogenation, isomerization, and hydrogenolysis., The catalytic reforming unit includes the reactor, regenerator (if separate), separators, catalyst isolation and transport vessels (e.g., lock and lift hoppers), recirculation equipment, scrubbers, and other ancillary equipment.

Catalytic reforming unit regenerator means one or more regenerators which comprise that portion of the catalytic reforming unit and ancillary equipment in which the following regeneration steps typically are performed: depressurization, purge, coke burn-off, catalyst rejuvenation with a chloride (or other halogenated) compound(s), and a final purge. The catalytic reforming unit catalyst regeneration process can be done either as a semi-regenerative, cyclic, or continuous regeneration process.

Coke burn-off means the coke removed from the surface of the catalytic cracking unit catalyst or the catalytic reforming unit catalyst by combustion in the catalyst regenerator. The rate of coke burn-off is calculated using Equation 2 in §63.1564.

Combustion device means an individual unit of equipment such as a flare, incinerator, process heater, or boiler used for the destruction of organic HAP or VOC.

Combustion zone means the space in an enclosed combustion device (e.g., vapor incinerator, boiler, furnace, or process heater) occupied by the organic HAP and any supplemental fuel while burning. The combustion zone includes any flame that is visible or luminous as well as that space outside the flame envelope in which the organic HAP continues to be oxidized to form the combustion products.

Contact material means any substance formulated to remove metals, sulfur, nitrogen, or any other contaminants from petroleum derivatives.

Continuous regeneration reforming means a catalytic reforming process characterized by continuous flow of catalyst material through a reactor where it mixes with feedstock, and a portion of the catalyst is continuously removed and sent to a special regenerator where it is regenerated and continuously recycled back to the reactor.

Control device means any equipment used for recovering, removing, or oxidizing HAP in either gaseous or solid form. Such equipment includes, but is not limited to, condensers, scrubbers, electrostatic precipitators, incinerators, flares, boilers, and process heaters.

Cyclic regeneration reforming means a catalytic reforming process characterized by continual batch regeneration of catalyst insitu in any one of several reactors (e.g., 4 or 5 separate reactors) that can be isolated from and returned to the reforming operation while maintaining continuous reforming process operations (i.e., feedstock continues flowing through the remaining reactors without change in feed rate or product octane).

Deviation means any instance in which an affected source subject to this subpart, or an owner or operator of such a source:

(1) Fails to meet any requirement or obligation established by this subpart, including but not limited to any emission limit, operating limit, or work practice standard;

(2) Fails to meet any term or condition that is adopted to implement an applicable requirement in this subpart and that is included in the operating permit for any affected source required to obtain such a permit; or

(3) Fails to meet any emission limit, operating limit, or work practice standard in this subpart during startup, shutdown, or malfunction, regardless of whether or not such failure is permitted by this subpart.

Emission limitation means any emission limit, opacity limit, operating limit, or visible emission limit.

Flame zone means the portion of a combustion chamber of a boiler or process heater occupied by the flame envelope created by the primary fuel.

Flow indicator means a device that indicates whether gas is flowing, or whether the valve position would allow gas to flow, in or through a line.

Fuel gas system means the offsite and onsite piping and control system that gathers gaseous streams generated by the source, may blend them with sources of gas, if available, and transports the blended gaseous fuel at suitable pressures for use as fuel in heaters, furnaces, boilers, incinerators, gas turbines, and other combustion devices located within or outside of the refinery. The fuel is piped directly to each individual combustion device, and the system typically operates at pressures over atmospheric. The gaseous streams can contain a mixture of methane, light hydrocarbons, hydrogen, and other miscellaneous species.

HCl means for the purposes of this subpart, gaseous emissions of hydrogen chloride that serve as a surrogate measure for total emissions of hydrogen chloride and chlorine

as measured by Method 26 or 26A in appendix A to part 60 of this chapter or an approved alternative method.

Incinerator means an enclosed combustion device that is used for destroying organic compounds, with or without heat recovery. Auxiliary fuel may be used to heat waste gas to combustion temperatures. An incinerator may use a catalytic combustion process where a substance is introduced into an exhaust stream to burn or oxidize contaminants while the substances itself remains intact, or a thermal process which uses elevated temperatures as a primary means to burn or oxidize contaminants.

Internal scrubbing system means a wet scrubbing, wet injection, or caustic injection control device that treats (in-situ) the catalytic reforming unit recirculating coke burn exhaust gases for acid (HCl) control during reforming catalyst regeneration upstream of the atmospheric coke burn vent.

Ni means, for the purposes of this subpart, particulate emissions of nickel that serve as a surrogate measure for total emissions of metal HAP, including but not limited to: antimony, arsenic, beryllium, cadmium, chromium, cobalt, lead, manganese, nickel, and selenium as measured by Method 29 in appendix A to part 60 of this chapter or by an approved alternative method.

Nonmethane TOC means, for the purposes of this subpart, emissions of total organic compounds, excluding methane, that serve as a surrogate measure of the total emissions of organic HAP compounds including, but not limited to, acetaldehyde, benzene, hexane, phenol, toluene, and xylenes and nonHAP VOC as measured by Method 25 in appendix A to part 60 of this chapter, by the combination of Methods 18 and 25A in appendix A to part 60 of this chapter, or by an approved alternative method.

Oxidation control system means an emission control system which reduces emissions from sulfur recovery units by converting these emissions to sulfur dioxide.

PM means, for the purposes of this subpart, emissions of particulate matter that serve as a surrogate measure of the total emissions of particulate matter and metal HAP contained in the particulate matter, including but not limited to: antimony, arsenic, beryllium, cadmium, chromium, cobalt, lead, manganese, nickel, and selenium as measured by Methods 5B or 5F in appendix A to part 60 of this chapter or by an approved alternative method.

Process heater means an enclosed combustion device that primarily transfers heat liberated by burning fuel directly to process streams or to heat transfer liquids other than water.

Process vent means, for the purposes of this subpart, a gas stream that is continuously or periodically discharged during normal operation of a catalytic cracking unit, catalytic reforming unit, or sulfur recovery unit, including gas streams that are discharged directly to the atmosphere, gas streams that are routed to a control device prior to discharge to the atmosphere, or gas streams that are diverted through a product recovery device line prior to control or discharge to the atmosphere.

Reduced sulfur compounds means hydrogen sulfide, carbonyl sulfide, and carbon disulfide.

Reduction control system means an emission control system which reduces emissions from sulfur recovery units by converting these emissions to hydrogen sulfide.

Responsible official means responsible official as defined in 40 CFR 70.2.

Semi-regenerative reforming means a catalytic reforming process characterized by shutdown of the entire reforming unit (e.g., which may employ three to four separate reactors) at specified intervals or at the owner's or operator's convenience for in situ catalyst regeneration.

Sulfur recovery unit means a process unit that recovers elemental sulfur from gases that contain reduced sulfur compounds and other pollutants, usually by a vapor-phase catalytic reaction of sulfur dioxide and hydrogen sulfide. This definition does not include a unit where the modified reaction is carried out in a water solution which contains a metal ion capable of oxidizing the sulfide ion to sulfur, e.g., the LO-CAT II process.

TOC means, for the purposes of this subpart, emissions of total organic compounds that serve as a surrogate measure of the total emissions of organic HAP compounds including, but not limited to, acetaldehyde, benzene, hexane, phenol, toluene, and xylenes and nonHAP VOC as measured by Method 25A in appendix A to part 60 of this chapter or by an approved alternative method.

TRS means, for the purposes of this subpart, emissions of total reduced sulfur compounds, expressed as an equivalent sulfur dioxide concentration, that serve as a surrogate measure of the total emissions of sulfide HAP carbonyl sulfide and carbon disulfide as measured by Method 15 in appendix A to part 60 of this chapter or by an approved alternative method.

Work practice standard means any design, equipment, work practice, or operational standard, or combination thereof, that is promulgated pursuant to section 112(h) of the CAA.

[67 FR 17773, Apr. 11, 2002, as amended at 70 FR 6942, Feb. 9, 2005]

Table 1 to Subpart UUU of Part 63 – Metal HAP Emission Limits for Catalytic Cracking Units

As stated in §63.1564(a)(1), you shall meet each emission limitation in the following table that applies to you

For each new or existing catalytic cracking unit...	You shall meet the following emission limits for each catalyst regenerator vent...
1. Subject to the new source performance standard (NSPS) for PM in 40 CFR 60.102.	PM emissions must not exceed 1.0 kilogram (kg) per 1,000 kg (1.0 lb/ 1,000 lb) of coke burn-off in the catalyst regenerator; if the discharged gases pass through an incinerator or waste heat boiler in which you burn auxiliary or in supplemental liquid or solid fossil fuel, the incremental rate of PM emissions must not exceed 43.0 grams per Gigajoule (g/GJ) or 0.10 pounds per million British thermal units (lb/million Btu) of heat input attributable to the liquid or solid fossil fuel; and the opacity of emissions must not exceed 30 percent, except for one 6-minuteaverage opacity reading in any 1-hour period.
2. Option 1: NSPS requirements not subject to the NSPS for PM in 40 CFR 60.102.	PM emissions must not exceed 1.0 kg/1,000 kg (1.0 lb/1,000 lb) of coke burn-off in the catalyst regenerator; if the discharged gases pass through an incinerator or waste heat boiler in which you burn auxiliary or supplemental liquid or solid fossil fuel, the incremental rate of PM must not exceed 43.0 g/GJ (0.10 lb/million Btu) of heat input attributable to the liquid or solid fossil fuel; and the opacity of emissions must not exceed 30 percent, except for one 6-minute average opacity reading in any 1-hour period.
3. Option 2: PM limit not subject to the NSPS for PM in 40 CFR 60.102.	PM emissions must not exceed 1.0 kg/ 1,000 kg (1.0 lb/1,000 lbs) of coke burn-off in the catalyst regenerator.
4. Option 3: Ni lb/hr not subject to the NSPS for PM in 40 CFR 60.102.	Nickel (Ni) emissions must not exceed 13,000 milligrams per hour (mg/hr) (0.029 lb/hr).
5. Option 4: Ni Lb/1,000 lbs of coke burn-off not subject to the NSPS for PM in 40 CFR 60.102.	Ni emissions must not exceed 1.0 mg/kg (0.001 lb/1,000 lbs) of coke burn-off in the catalyst regenerator.

[67 FR 17773, Apr. 11, 2002, as amended at 70 FR 6942, Feb. 9, 2005]

Table 2 to Subpart UUU of Part 63 – Operating Limits for Metal HAP Emissions From Catalytic Cracking Units

As stated in §63.1564(a)(2), you shall meet each operating limit in the following table that applies to you

For each new or existing catalytic cracking unit...	For this type of continuous monitoring system...	For this type of control device...	You shall meet this operating limit...
1. Subject to the NSPS for PM in 40 CFR 60.102.	Continuous opacity monitoring system.	Not applicable	Not applicable.
2. Option 1 NSPS requirements not subject to the NSPS for PM in 40 CFR 60.102.	Continuous opacity monitoring system.	Not applicable	Not applicable.
3. Option 2: PM limit not subject to the NSPS for PM in 40 CFR 60.102.	a. Continuous opacity monitoring system.	Electrostatic precipitator.....	Maintain the hourly average opacity of emissions from your catalyst regenerator vent no higher than the site-specific opacity limit established during the performance test.
	b. Continuous parameter monitoring systems.	Electrostatic precipitator.....	Maintain the daily average gas flow rate no higher than the limit established in the performance test; and maintain the daily average voltage and secondary current (or total power input) above the limit established in the performance test.
	c. Continuous parameter monitoring systems.	Wet scrubber	Maintain the daily average pressure drop above the limit established in the performance test (not applicable to a wet scrubber of the non-venturi jet-ejector design); and maintain the daily average liquid-to-gas ratio above the limit established in the performance test.
4. Option 3: Ni lb/hr not subject to the NSPS for PM in 40 CFR 60.102	a. Continuous opacity monitoring system	Electrostatic precipitator	Maintain the daily average Ni operating value no higher than the limit established during the performance test.
	b. Continuous parameter monitoring systems.	i. Electrostatic precipitator	Maintain the daily average gas flow rate no higher than the limit established during the performance test; maintain the monthly rolling average of the equilibrium catalyst Ni concentration no higher than the limit established during the performance test; and maintain the daily average voltage and secondary current (or total power input) above the established during the performance test.

For each new or existing catalytic cracking unit...	For this type of continuous monitoring system...	For this type of control device...	You shall meet this operating limit...
		ii. Wet scrubber.....	Maintain the monthly rolling average of the equilibrium catalyst Ni concentration no higher than the limit established during the performance test; maintain the daily average pressure drop above the limit established during the performance test (not applicable to a non-venturi wet scrubber of the jet-ejector design); and maintain the daily average liquid-to-gas ratio above the limit established during the performance test.
5. Option 4: Ni lb/1,000 lbs of coke burn-off not subject to the NSPS for PM in 40 CFR 60.102	a. Continuous opacity monitoring system	Electrostatic precipitator.....	Maintain the daily average Ni operating value no higher than the Ni operating limit established during the performance test.
	b. Continuous parameter monitoring systems	i. Electrostatic precipitator.....	Maintain the monthly rolling average of the equilibrium catalyst Ni concentration no higher than the limit established during the performance test; and maintain the daily average voltage and secondary current for total power input) above the limit established during the performance test.
		ii. Wet scrubber.....	Maintain the monthly rolling average of the equilibrium catalyst Ni concentration no higher than the limit established during the performance test; maintain the daily average pressure drop above the limit established during the performance test (not applicable to a non-venturi wet scrubber of the jet-ejector design); and maintain the daily average liquid-to-gas ratio above the limit established during the performance test.

[67 FR 17773, Apr. 11, 2002, as amended at 70 FR 6942, Feb. 9, 2005]

Table 3 to Subpart UUU of Part 63. – Continuous Monitoring Systems for Metal HAP Emissions From Catalytic Cracking Units

As stated in §63.1564(b)(1), you shall meet each requirement in the following table that applies to you

For each new or existing catalytic cracking unit...	If your catalytic cracking unit is...	And you use this type of control device for your vent...	You shall install, operate, and maintain a...
1. Subject to the NSPS for PM in 40 CFR 60.102.	Any size.....	Electrostatic precipitator or wet scrubber or no control device.	Continuous opacity monitoring system to measure and record the opacity of emissions from each catalyst regenerator vent.
2. Option 1: NSPS limits not subject to the NSPS for PM in 40 CFR 60.102.	Any size.....	Electrostatic precipitator or wet scrubber or no control device.	Continuous opacity monitoring system to measure and record the opacity of emissions from each catalyst regenerator vent.
3. Option 2: PM limit not subject to the NSPS for PM in 40 CFR 60.102.	a. Over 20,000 barrels per day fresh feed capacity.	Electrostatic precipitator.....	Continuous opacity monitoring system to measure and record the opacity of emissions from each catalyst regenerator vent.
	b. Up to 20,000 barrels per day fresh feed capacity.	Electrostatic precipitator.....	Continuous opacity monitoring system to measure and record the opacity of emissions from each catalyst regenerator vent; or continuous parameter monitoring systems to measure and record the gas flow rate entering or exiting the control device[1] and the voltage and secondary current (or total power input) to the control device.
	c. Any size.....	i. Wet scrubber.....	(1) Continuous parameter monitoring system to measure and record the pressure drop across the scrubber, gas flow rate entering or exiting the control device[1], and total liquid (or scrubbing liquor) flow rate to the control device. (2) If you use a wet scrubber of the non- venturi jet-ejector design, you're not required to install and operate a continuous parameter monitoring system for pressure drop.

For each new or existing catalytic cracking unit...	If your catalytic cracking unit is...	And you use this type of control device for your vent...	You shall install, operate, and maintain a...
	d. Any size.....	No electrostatic precipitator or wet scrubber.	Continuous opacity monitoring system to measure and record the opacity of emissions from each catalyst regenerator vent.
4. Option 3: Ni lb/hr not subject to the NSPS for PM in 40 CFR 60.102.	a. Over 20,000 barrels per day fresh feed capacity.	Electrostatic precipitator.....	Continuous opacity monitoring system to measure and record the opacity of emissions from each catalyst regenerator vent and continuous parameter monitoring system to measure and record the gas flow rate entering or exiting the control device[1].
	b. Up to 20,000 barrels per day fresh feed capacity.	Electrostatic precipitator.....	Continuous opacity monitoring system to measure and record the opacity of emissions from each catalyst regenerator vent and continuous parameter monitoring system to measure and record the gas flow rate entering or exiting the control device[1]; or continuous parameter monitoring systems to measure and record the gas flow rate entering or exiting the control device[1] and the voltage and secondary current (or total power input) to the control device.
	c. Any size.....	Wet scrubber.....	(1) Continuous parameter monitoring system to measure and record the pressure drop across the scrubber, gas flow rate entering or exiting the control device[1], and total liquid (or scrubbing liquor) flow rate to the control device. (2) If you use a wet scrubber of the non- venturi jet-ejector, design, you're not required to install and operate a continuous parameter monitoring system for pressure drop.
	d. Any size.....	No electrostatic precipitator or wet scrubber.	Continuous opacity monitoring system to measure and record the opacity of emissions from each catalyst regenerator vent and continuous parameter monitoring system to measure and record the gas flow rate[1]
5. Option 4: Ni lb/1,000 lbs of coke burn-off not subject to the NSPS for PM in 40 CFR 60.102.	a. Over 20,000 barrels per day fresh feed capacity.	Electrostatic precipitator.....	Continuous opacity monitoring system to measure and record the opacity of emissions from each catalyst regenerator vent and continuous parameter monitoring system to measure and record the gas flow rate entering or exiting the control device[1].
	b. Up to 20,000 barrels per day fresh feed capacity.	Electrostatic precipitator.....	Continuous opacity monitoring system to measure and record the opacity of emissions from each catalyst regenerator vent and continuous parameter monitoring system to measure and record the gas flow rate entering or exiting the control device[1]; or continuous parameter monitoring systems to measure and record the gas flow rate entering or exiting the control device[1] and the voltage and secondary current (or total power input) to the control device.
	c. Any size.....	Wet scrubber.....	Continuous parameter monitoring system to measure and record the pressure drop across the scrubber, gas flow rate entering or exiting the control device[1], and total liquid (or scrubbing liquor) flow rate to the control device.
	d. Any size.....	No electrostatic precipitator or wet scrubber	Continuous opacity monitoring system to measure and record the opacity of emissions from each catalyst regenerator vent and continuous parameter monitoring system to measure and record the gas flow rate[1]

[1] If applicable, you can use the alternative in § 63.1573(a)(1) instead of a continuous parameter monitoring system for gas flow rate.

[70 FR 6942, Feb. 9, 2005]

Table 4 to Subpart UUU of Part 63. – Requirements for Performance Tests for Metal HAP Emissions From Catalytic Cracking Units Not Subject to the New Source Performance Standard (NSPS) for Particulate Matter (PM)

As stated in §63.1564(b)(2), you shall meet each requirement in the following table that applies to you

For each new or existing catalytic cracking unit catalyst regenerator vent...	You must...	Using...	According to these requirements...
1. If you elect Option 1 in item 2 of Table 1, Option 2 in item 3 of Table 1, Option 3 in item 4 of Table 1, or Option 4 in item 5 of Table 1 of this subpart.	a. Select sampling port's location and the number of traverse ports.	Method 1 or 1A in appendix A to part 60 of this chapter.	Sampling sites must be located at the outlet of the control device or the outlet of the regenerator, as applicable, and prior to any releases to the atmosphere.
	b. Determine velocity and volumetric flow rate.	Method 2, 2A, 2C, 2D, 2F, or 2G in appendix A to part 60 of this to part 60 of this chapter, as applicable.	
	c. Conduct gas molecular weight analysis.	Method 3, 3A, or 3B in appendix A to part 60 of this chapter, as applicable.	
	d. Measure moisture content of the stack gas.	Method 4 in appendix A to part 60 of this chapter.	
	e. If you use an electro-static precipitator, record the total number of fields in the control system and how many operated during the applicable performance test.		
	f. If you use a wet scrubber, record the total amount (rate) of water (or scrubbing liquid) and the amount (rate) of make-up liquid to the scrubber during each test run.		
2. Option 1: Elect NSPS.....	a. Measure PM emissions	Method 5B or 5F (40 CFR part 60, appendix A) to determine PM emissions and associated moisture content for units without wet scrubbers. Method 5B (40 CFR part 60, appendix A) to determine PM emissions and associated moisture content for unit with wet scrubber.	You must maintain a sampling rate of at least 0.15 dry standard cubic meters per minute (dscm/min) (0.53 dry standard cubic feet per minute (dscf/min)).
	b. Compute PM emission rate (lbs/1,000 lbs) of coke burn-off.	Equations 1, 2, and 3 of §63.1564 (if applicable).	
	c. Measure opacity of emissions.	Continuous opacity monitoring system.	You must collect opacity monitoring data every 10 seconds during the entire period of the Method 5B or 5F performance test and reduce the data to 6-minute averages.
3. Option 2: PM limit.....	a. Measure PM emissions.	See item 2. of this table.	See item 2. of this table.
	b. Compute coke burn-off rate and PM emission rate.	Equations 1 and 2 of §63.1564	
	c. Establish your site-specific opacity operating limit if you use a continuous opacity monitoring system.	Data from the continuous opacity monitoring system.	You must collect opacity monitoring data every 10 seconds during the entire period of the Method 5B or 5F performance test and reduce the data to 6-minute averages; determine and record the hourly average opacity from all the 6-minute averages; and compute the site-specific limit using Equation 4 of §63.1564.
4. Option 3: Ni lb/hr.....	a. Measure concentration of Ni and total metal HAP.	Method 29 (40 CFR part 60, appendix A).	
	b. Compute Ni emission rate (lb/hr).	Equation 5 of §63.1564.	

For each new or existing catalytic cracking unit catalyst regenerator vent...	You must...	Using...	According to these requirements...
	c. Determine the equilibrium catalyst Ni concentration.	XRF procedure in appendix A to this subpart[1], or EPA Method 6010B or 6020 or EPA Method 7520 or 7521 in SW-846[2]; or an alternative to the SW-846 method satisfactory to the Administrator.	You must obtain 1 sample for each of the 3 runs; determine and record the equilibrium catalyst Ni concentration for each of the 3 samples; and you may adjust the laboratory results to the maximum value using Equation 2 of §63.1571.
	d. If you use a continuous opacity monitoring system, establish your site-specific Ni operating limit.	i. Equations 6 and 7 of §63.1564 using data from continuous opacity monitoring system, gas flow rate, results of equilibrium catalyst Ni concentration analysis, and Ni emission rate from Method 29 test.	(1) You must collect opacity monitoring data every 10 seconds during the entire period of the initial Ni performance test; reduce the data to 6-minute averages; and determine and record the hourly average opacity from all the 6-minute averages. (2) You must collect gas flow rate monitoring data every 15 minutes during the entire period of the initial Ni performance test; measure the gas flow as near as practical to the continuous opacity monitoring system; and determine and record the hourly average actual gas flow rate from all the readings.
5. Option 4: Ni lbs/1,000 lbs of coke burn-off.	a. Measure concentration of Ni and total metal HAP.	Method 29 (40 CFR part 60, appendix A).	
	b. Compute Ni emission rate (lb/1,000 lbs of coke burn-off).	Equations 1 and 8 of §63.1564.	
	c. Determine the equilibrium catalyst Ni concentration.	See item 4.c. of this table.	You must obtain 1 sample for each of the 3 runs; determine and record the equilibrium catalyst Ni concentration for each of the 3 samples; and you may adjust the laboratory results to the maximum value using Equation 2 of §63.1571.
	d. If you use a continuous opacity monitoring system, establish your site-specific Ni operating limit.	i. Equations 9 and 10 of §63.1564 with data from continuous opacity monitoring system, coke burn-off rate, results of equilibrium catalyst Ni concentration analysis, and Ni emission rate from Method 29 test.	(1) You must collect opacity monitoring data every 10 seconds during the entire period of the initial Ni performance test; reduce the data to 6-minute averages; and determine and record the hourly average opacity from all the 6-minute averages. (2) You must collect gas flow rate monitoring data every 15 minutes during the entire period of the initial Ni performance test; measure the gas flow rate as near as practical to the continuous opacity monitoring system; and determine and record the hourly average actual gas flow rate from all the readings.
	e. Record the catalyst addition rate for each test and schedule for the 10-day period prior to the test.		
6. If you elect Option 2 in Entry 3 in Table 1, Option 3 in Entry 4 in Table 1, or Option 4 in Entry 5 in Table 1 of this subpart and you use continuous parameter monitoring systems	a Establish each operating limit in Table 2 of this subpart that applies to you.	Data from the continuous parameter monitoring systems and applicable performance test methods.	
	b. Electrostatic precipitator or wet scrubber: gas flow rate.	Data from the continuous parameter monitoring systems and applicable performance test methods.	You must collect gas flow rate monitoring data every 15 minutes during the entire period of the initial performance test; and determine and record the maximum hourly average gas flow rate from all the readings.

For each new or existing catalytic cracking unit catalyst regenerator vent...	You must...	Using...	According to these requirements...
	c. Electrostatic precipitator: voltage and secondary current (or total power input).	Data from the continuous parameter monitoring systems and applicable performance test methods.	You must collect voltage and secondary current (or total power input) monitoring data every 15 minutes during the entire period of the initial performance test; and determine and record the minimum hourly average voltage and secondary current (or total power input) from all the readings.
	d. Electrostatic precipitator or wet scrubber: equilibrium catalyst Ni concentration.	Results of analysis for equilibrium catalyst Ni concentration.	You must determine and record the average equilibrium catalyst Ni concentration for the 3 runs based on the laboratory results. You may adjust the value using Equation 1 or 2 of §63.1571 as applicable.
	e. Wet scrubber: pressure drop (not applicable to non-venturi scrubber of jet ejector design).	Data from the continuous parameter monitoring systems and applicable performance test methods.	You must collect pressure drop monitoring data every 15 minutes during the entire period of the initial performance test; and determine and record the minimum hourly average pressure drop from all the readings.
	f. Wet scrubber: liquid-to-gas ratio.	Data from the continuous parameter monitoring systems and applicable performance test methods.	You must collect gas flow rate and total water (or scrubbing liquid) flow rate monitoring data every 15 minutes during the entire period of the initial performance test; determine and record the hourly average gas flow rate and total water (or scrubbing liquid) flow rate from all the readings; and determine and record the minimum liquid-to-gas ratio.
	g. Alternative procedure for gas flow rate.	Data from the continuous parameter monitoring systems and applicable performance test methods.	You must collect air flow rate monitoring data or determine the air flow rate using control room instrumentation every 15 minutes during the entire period of the initial performance test; determine and record the hourly average rate of all the readings; and determine and record the maximum gas flow rate using Equation 1 of §63.1573.

[1] Determination of Metal Concentration on Catalyst Particles (Instrumental Analyzer Procedure).

[2] EPA Method 6010B, Inductively Coupled Plasma-Atomic Emission Spectrometry, EPA Method 6020, Inductively Coupled Plasma-Mass Spectrometry, EPA Method 7520, Nickel Atomic Absorption, Direct Aspiration, and EPA Method 7521, Nickel Atomic Absorption, Direct Aspiration are included in ``Test Methods for Evaluating Solid Waste, Physical/Chemical Methods," EPA Publication SW-846, Revision 5 (April 1998). The SW-846 and Updates (document number 955-001-00000-1) are available for purchase from the Superintendent of Documents, U.S. Government Printing Office, Washington, DC 20402, (202) 512-1800; and from the National Technical Information Services (NTIS), 5285 Port Royal Road, Springfield, VA 22161, (703) 487-4650. Copies may be inspected at the EPA Docket Center (Air Docket), EPA West, Room B-108, 1301 Constitution Ave., NW., Washington, DC; or at the Office of the Federal Register, 800 North Capitol Street, NW., Suite 700, Washington, DC.

[67 FR 17773, Apr. 11, 2002, as amended at 70 FR 6942 and 6944, Feb. 9, 2005]

Table 5 to Subpart UUU of Part 63. – Initial Compliance With Metal HAP Emission Limits for Catalytic Cracking Units

As stated in §63.1564(b)(5), you shall meet each requirement in the following table that applies to you

For each new and existing catalytic cracking unit catalyst regenerator vent...	For the following emission limit...	You have demonstrated initial compliance if...
1. Subject to the NSPS for PM in 40 CFR 60.102.	PM emissions must not exceed 1.0 kg/1,000 kg (1.0 lb/1,000 lb) of coke burn-off in the catalyst regenerator; if the discharged gases pass through an incinerator or waste heat boiler in which you burn auxiliary or supplemental liquid or solid fossil fuel, you must limit the incremental rate of PM to no more than 43.0 grams per Megajoule (g/MJ) or 0.10 pounds per million British thermal units (lb/million Btu) of heat input attributable to the liquid or solid fossil fuel; and the opacity of emissions must not exceed 30 percent, except for one 6-minute average opacity reading in any 1-hour period.	You have already conducted a performance test to demonstrate initial compliance with the NSPS and the measured PM emission rate is less than or equal to 1.0 kg/1,000 kg (1.0 lb/1,000 lb)of coke burn-off in the catalyst regenerator. As part of the Notification of Compliance Status, you must certify that your vent meets the PM limit. You are not required to do another performance test to demonstrate initial compliance. If applicable, you have already conducted a performance test to demonstrate initial compliance with the NSPS and the measured PM rate is less than or equal to 43.0 g/GJ (0.10 lb/million Btu) of heat attributable to the liquid or solid fossil fuel. As part of the Notification of Compliance Status, you must certify that your vent meets the PM emission limit. You are not required to do another performance test to demonstrate initial compliance. You have already conducted a performance test to demonstrate initial compliance with the NSPS and the average hourly opacity of emissions is no more than 30 percent. Except: one 6-minute average in any 1-hour period can exceed 30 percent. As part of the Notification of Compliance Status, you must certify that your vent meets the opacity limit. You are not required to do another performance test to demonstrate initial compliance. You have already conducted a performance evaluation to demonstrate initial compliance with the applicable performance specification. As part of your Notification of Compliance Status, you certify that your continuous opacity monitoring system meets the requirements in §63.1572. You are not required to do a performance evaluation to demonstrate initial compliance.
2. Option 1. Elect NSPS not subject to the NSPS for PM.	PM emissions must not exceed 1.0 kg/1,000 kg (1.0 lb/1,000 lb) of coke burn-off in the catalyst regenerator; if the discharged gases pass through an incinerator or waste heat boiler in which you burn auxiliary or supplemental liquid or solid fossil fuel, the incremental rate of PM must not exceed 43.0 g/GJ) (0.10 lb/million Btu) of heat input attributable to the liquid or solid fossil fuel; and the opacity of emissions must not exceed 30 percent, except for one 6-minute average opacity reading in any 1-hour period.	The average PM emission rate, measured using EPA Method 5B or 5F (for a unit without a wet scrubber) or 5B (for a unit with a wet scrubber), over the period of the initial performance test, is no higher than 1.0 kg/1,000 kg (1.0 lb/1,000 lbs) of coke burn-off in the catalyst regenerator. The PM emission rate is calculated using Equations 1 and 2 of the §63.1564. If applicable, the average PM emission rate, measured using EPA Method 5B emission rate, measured using EPA Method 5B or 5F (for a unit without a wet scrubber) or 5B (for a unit with a wet scrubber) over the period of the initial performance test, is no higher than 43.0 g/GJ (0.10 lb/million Btu) of heat input attributable to the liquid or solid fossil fuel. The PM emission rate is calculated using Equation 3 of §63.1564; no more than one 6-minute average measured by the continuous opacity monitoring system exceeds 30 percent opacity in any 1-hour period over the period of the performance test; and your performance evaluation shows the continuous opacity monitoring system meets the applicable requirements in §63.1572.
3. Option 2: not subject to the NSPS for PM.	PM emissions must not exceed 1.0 kg/1,000 kg (1.0 lb/1,000 lb) of coke burn-off in the catalyst regenerator.	The average PM emission rate, measured using EPA Method 5B or 5F (for a unit without a wet scrubber) or 5B (for a unit with a wet scrubber) over the period of the initial performance test, is less than or equal to 1.0 kg/1,000 kg (1.0 lb/1,000 lbs) of coke burn-off in the catalyst regenerator. The PM emission rate is calculated using Equations 1 and 2 of §63.1564; and if you use a continuous opacity monitoring system, your performance evaluation shows the system meets the applicable requirements in §63.1572.
4. Option 3: not subject to the NSPS for PM.	Nickel (Ni) emissions from your catalyst regenerator vent must not exceed 13,000 mg/hr (0.029 lb/hr).	The average Ni emission rate, measured using Method 29 over the period of the initial performance test, is not more than 13,000 mg/hr (0.029 lb/hr). The Ni emission rate is calculated using Equation 5 of §63.1564; and if you use a continuous opacity monitoring system, your performance evaluation shows the system meets the applicable requirements in §63.1572.
5. Option 4: Ni lb/1,000 lbs of coke burn-off not subject to the NSPS for PM.	Ni emissions from your catalyst regenerator vent must not exceed 1.0 mg/kg (0.001 lb/ lbs) of coke burn-off in the catalyst regenerator.	The average Ni emission rate, measured using Method 29 over the period of the initial performance test, is not more than 1.0 mg/kg (0.001 lb/1,000 lbs) of coke burn- off in the catalyst regenerator. The Ni emission rate is calculated using Equation 8 of §63.1564; and if you use a continuous opacity monitoring system, your performance evaluation shows the system meets the applicable requirements in §63.1572.

[67 FR 17773, Apr 11, 2002, as amended at 70 FR 6942 and 6946, Feb. 9, 2005]

Table 6 to Subpart UUU of Part 63. – Continuous Compliance With Metal HAP Emission Limits for Catalytic Cracking Units

As stated in §63.1564(c)(1), you shall meet each requirement in following table that applies to you

For each new and existing catalytic cracking unit...	Subject to this emission limit for your catalyst regenerator vent...	You shall demonstrate continuous compliance by...
1. Subject to the NSPS for PM in 40 CFR 60.102.	a. PM emissions must not exceed 1.0 lb/1,000 lbs of coke burn-off in the catalyst regenerator; if the discharged gases pass through an incinerator or waste heat boiler in which you burn auxiliary or supplemental liquid or solid fossil fuel, the incremental rate of PM must not exceed 43.0 g/GJ (0.10 lb/million Btu) of heat input attributable to the liquid or solid fossil fuel; and opacity of emissions must not exceed 30 percent, except for one 6-minute average opacity reading in any 1-hour period.	i. Determining and recording each day the average coke burn-off rate (thousands of kilograms per hour) using Equation 1 in §63.1564 and the hours of operation for each catalyst regenerator; maintaining PM emission rate below 1.0 kg/1,000 kg (1.0 lb/1,000 lbs) of coke burn-off; if applicable, determining and recording each day the rate of combustion of liquid or solid fossil fuels (liters/hour or kilograms/hour) and the hours of operation during which liquid or solid fossil-fuels are combusted in the incinerator-waste heat boiler; if applicable, maintaining the PM rate incinerator below 43 g/GJ (0.10 lb/million Btu) of heat input attributable to the solid or liquid fossil fuel; collecting the continuous opacity monitoring data for each catalyst regenerator vent according to §63.1572; and maintaining each 6-minute average at or below 30 percent except that one 6-minute average during a 1-hour period can exceed 30 percent.
2. Option 1: Elect NSPS not subject to the NSPS for PM in 40 CFR 60.102.	See item 1.a. of this table.....	See item 1.a.i. of this table.
3. Option 2: PM limit not subject to the NSPS for PM.	PM emissions must not exceed 1.0 lb/1000 lbs of coke burn-off in the catalyst regenerator.	Determining and recording each day the average coke burn-off rate (thousands of kilograms per hour) and the hours of operation for each catalyst regenerator by Equation 1 of §63.1564 (you can use process data to determine the volumetric flow rate); and maintaining the PM emission rate below 1.0 kg/1,000 kg (1.0 lb/1,000 lbs) of coke burn-off.
4. Option 3: Ni lb/hr not subject to the NSPS for PM.	Ni emissions must not exceed 13,000 mg/hr (0.029 lb/hr).	Maintaining Ni emission rate below 13,000 mg/hr (0.029 lb/hr).
5. Option 4: Ni lb/1,000 lbs of coke burn-off not subject to the NSPS for PM.	Ni emissions must not exceed 1.0 mg/kg (0.001 lb/1,000 lbs) of coke burn-in the catalyst regenerator.	Determining and recording each day the average coke burn-off rate (thousands of kilograms per hour) and the hours of operation for each catalyst regenerator by Equation 1 of §63.1564 (you can use process data to determine the volumetric flow rate); and maintaining Ni emission rate below 1.0 mg/kg (0.001 lb/1,000 lbs) of coke burn-off in the catalyst regenerator.

[67 FR 17773, Apr. 11, 2002, as amended at 70 FR 6942 and 6948, Feb. 9, 2005]

Table 7 to Subpart UUU of Part 63. – Continuous Compliance With Operating Limits for Metal HAP Emissions From Catalytic Cracking Units

As stated in §63.1564(c)(1), you shall meet each requirement in the following table that applies to you

For each new or existing catalytic cracking unit...	If you use...	For this operating limit...	You shall demonstrate continuous compliance by...
1. Subject to NSPS for PM in 40 CFR 60.102.	Continuous opacity monitoring system.	Not applicable.....	Complying with Table 6 of this subpart.
2. Option 1: Elect NSPS not subject to the NSPS for PM in 40 CFR 60.102.	Continuous opacity monitoring system.	Not applicable.....	Complying with Table 6 of this subpart.
3. Option 2: PM limit not subject to the NSPS for PM in 40 CFR 60.102.	a. Continuous opacity monitoring system.	The opacity of emissions from your catalyst regenerator vent must not exceed the site-specific opacity operating limit established during the performance test	Collecting the hourly average continuous opacity monitoring system data according to §63.1572; and maintaining the hourly average opacity at or below the site-specific limit.
	b. Continuous parameter monitoring systems -- electrostatic precipitator.	i. The daily average gas flow rate entering or exiting the control device must not exceed the operating limit established during the performance test.	Collecting the hourly and daily average gas flow rate monitoring data according to §63.1572[1]; and maintaining the daily average gas flow rate at or below the limit established during the performance test.

For each new or existing catalytic cracking unit...	If you use...	For this operating limit...	You shall demonstrate continuous compliance by...
		ii. The daily average voltage and secondary current (or total power input) to the control device must not fall below the operating limit established during the performance test.	Collecting the hourly and daily average voltage and secondary current (or total power input) monitoring data according to §63.1572; and maintaining the daily average voltage and secondary current (or total power input) at above the limit established during the performance test.
	c. Continuous parameter monitoring systems -- wet scrubber.	i. The daily average pressure drop across the scrubber must not fall below the operating limit established during the performance test.	Collecting the hourly and daily average pressure drop monitoring data according to §63.1572; and maintaining the daily average pressure drop above the limit established during the performance test.
		ii. The daily average liquid-to-gas ratio must not fall below the operating limit established during the performance test.	Collecting the hourly average gas flow rate and water (or scrubbing liquid) flow rate monitoring data according to §63.1572[1]; determining and recording the hourly average liquid-to-gas ratio; determining and recording the daily average liquid-to-gas ratio; and maintaining the daily average liquid-to-gas ratio above the limit established during the performance test.
4. Option 3: Ni lb/hr not subject to the NSPS for PM in 40 CFR 60.102.	a. Continuous opacity monitoring system.	The daily average Ni operating value must not exceed the site-specific Ni operating limit established during the performance test.	Collecting the hourly average continuous opacity monitoring system data according §63.1572; determining and recording equilibrium catalyst Ni concentration at least once a week[2]; collecting the hourly average gas flow rate monitoring data according to §63.1572[1]; determining and recording the hourly average Ni operating value using Equation 11 of §63.1564; determining and recording the daily average Ni operating value; and maintaining the daily average Ni operating value below the site-specific Ni operating limit established the performance test.
	b. Continuous parameter monitoring systems -- electrostatic precipitator.	i. The daily average gas flow rate entering or exiting the control device must not exceed the operating limit established in the performance test.	See item 3.b.i. of this table.
		ii. The daily average voltage and secondary current (or total power input) must not fall below the level established in the performance test.	See item 3.b.ii. of this table.
		iii. The monthly rolling average of the equilibrium catalyst Ni concentration must not exceed the level established during the performance test.	Determining the recording the equilibrium catalyst Ni concentration at least once a week[2]; determining and recording the monthly rolling average of the equilibrium catalyst Ni concentration once each week using the weekly or most recent value; and maintaining the monthly rolling average below the limit established in the performance test.
	c. Continuous parameter monitoring systems -- wet scrubber.	i. The daily average pressure drop must not fall below the operating limit established in the performance test.	See item 3.c.i. of this table.
		ii. The daily average liquid-to-gas ratio must not fall below the operating limit established during the performance test	See item 3.c.ii of this table.

For each new or existing catalytic cracking unit...	If you use...	For this operating limit...	You shall demonstrate continuous compliance by...
		iii. The monthly rolling average equilibrium catalyst Ni concentration must not exceed the level established during the performance test.	Determining and recording the equilibrium catalyst Ni concentration at least once a week[2]; determining and recording the monthly rolling average of equilibrium catalyst Ni concentration once each week using the weekly or most recent value; and maintaining the monthly rolling average below the limit established in the performance test.
5. Option 4: Ni lb/ton of coke burn-off not subject to the NSPS for PM in 40 CFR 60.102	a. Continuous opacity monitoring system.	The daily average Ni operating value must not exceed the site-specific Ni operating limit established during the performance test.	Collecting the hourly average continuous opacity monitoring system data according to §63.1572; collecting the hourly average gas flow rate monitoring data according to §63.1572[1]; determining and recording equilibrium catalyst Ni concentration at least once a week[2]; determining and recording the hourly average Ni operating value using Equation 12 of §63.1564; determining and recording the daily average Ni operating value; and maintaining the daily average Ni operating value below the site-specific Ni operating limit established during the performance test.
	b. Continuous parameter monitoring systems -- electrostatic precipitator.	i. The daily average gas flow rate to the control device must not exceed the level established in the performance test.	See item 3.b.i. of this table.
		ii. The daily average voltage and secondary current (or total power input) must not fall below the level established in the performance test.	See item 3.b.ii. of this table.
		iii. The monthly rolling average equilibrium catalyst Ni concentration must not exceed the level established during the performance test.	See item 4.b.iii. of this table.
	c. Continuous parameter monitoring systems -- wet scrubber.	i. The daily average pressure drop must not fall below the operating limit established in the performance test.	See item 3.c.i. of this table.
		ii. The daily average liquid-to-gas ratio must not fall below the operating limit established during the performance test.	See item 3.c.ii. of this table.
		iii. The monthly rolling average equilibrium catalyst Ni concentration must not exceed the level established during the performance test.	See item 4.c.iii. of this table.

[1] If applicable, you can use the alternative in §63.1573(a)(1) for gas flow rate instead of a continuous parameter monitoring system if you used the alternative method in the initial performance test.

[2] The equilibrium catalyst Ni concentration must be measured by the procedure, Determination of Metal Concentration on Catalyst Particles (Instrumental Analyzer Procedure) in appendix A to this subpart; or by EPA Method 6010B, Inductively Coupled Plasma-Atomic Emission Spectrometry, EPA Method 6020, Inductively Coupled Plasma-Mass Spectrometry, EPA Method 7520, Nickel Atomic Absorption, Direct Aspiration, or EPA Method 7521, Nickel Atomic Absorption, Direct Aspiration; or by an alternative to EPA Method 6010B, 6020, 7520, or 7521 satisfactory to the Administrator. The EPA Methods 6010B, 6020, 7520, and 7521 are included in "Test Methods for Evaluating Solid Waste, Physical/Chemical Methods," EPA Publication SW-846, Revision 5 (April 1998). The SW-846 and Updates (document number 955-001-00000-1) are available for purchase from the Superintendent of Documents, U.S. Government Printing Office, Washington, DC 20402, (202) 512-1800; and from the National Technical Information Services (NTIS), 5285 Port Royal Road, Springfield, VA 22161, (703) 487-4650. Copies may be inspected at the EPA Docket Center (Air Docket), EPA West, Room B-108, 1301 Constitution Ave., NW., Washington, DC; or at the Office of the Federal Register, 800 North Capitol Street, NW., Suite 700, Washington, DC. These methods are also available at *http://www.epa.gov/epaoswer/hazwaste/test/main.htm*.

[70 FR 6948, Feb. 9, 2005]

Table 8 to Subpart UUU of Part 63. – Organic HAP Emission Limits for Catalytic Cracking Units

As stated in §63.1565(a)(1), you shall meet each emission limitation in the following table that applies to you

For each new and existing catalytic cracking unit...	You shall meet the following emission limit for each catalyst regenerator vent...
1. Subject to the NSPS for carbon monoxide (CO) in 40 CFR 60.103.	CO emissions from the catalyst regenerator vent or CO boiler serving the catalytic cracking unit must not exceed 500 parts per million volume (ppmv) (dry basis).
2. Not subject to the NSPS for CO in 40 CFR 60.103	a. CO emissions from the catalyst regenerator vent or CO boiler serving the catalytic cracking unit must not exceed 500 ppmv (dry basis).
	b. If you use a flare to meet the CO limit, the flare must meet the requirements for control devices in §63.11(b): visible emissions must not exceed a total of 5 minutes during any 2 consecutive hours.

[67 FR 17773, Apr. 11, 2002, as amended at 70 FR 6942 and 6948, Feb. 9, 2005]

Table 9 to Subpart UUU of Part 63. – Operating Limits for Organic HAP Emissions From Catalytic Cracking Units

As stated in §63.1565(a)(2), you shall meet each operating limit in the following table that applies to you

For each new or existing catalytic cracking unit...	For this type of continuous monitoring system..	For this type of control device...	You shall meet this operating limit..
1. Subject to the NSPS for carbon monoxide (CO) in 40 CFR 60.103.	Continuous emission monitoring system.	Not applicable.....	Not applicable
2. Not subject to the NSPS for CO in 40 CFR 60.103.	a. Continuous emission monitoring system.	Not applicable.....	Not applicable.
	b. Continuous parameter monitoring systems.	i. Thermal incinerator	Maintain the daily average combustion zone temperature above the limit established during the performance test; and maintain the daily average oxygen concentration in the vent stream (percent, dry basis) above the limit established during the performance test.
		ii. Boiler or process heater with a design heat input capacity under 44 MW or a boiler or process heater in which all vent streams are not introduced into the flame zone.	Maintain the daily average combustion zone temperature above the limit established in the performance test.
		iii. Flare	The flare pilot light must be present at all times and the flare must be operating at all times that emissions may be vented to it.

[67 FR 17773, Apr. 11, 2002, as amended at 70 FR 6942 and 6948, Feb. 9, 2005]

Table 10 to Subpart UUU of Part 63. – Continuous Monitoring Systems for Organic HAP Emissions From Catalytic Cracking Units

As stated in §63.1565(b)(1), you shall meet each requirement in the following table that applies to you

For each new or existing catalytic cracking unit...	And you use this type of control device for your vent...	You shall install, operate, and maintain this type of continuous monitoring system...
1. Subject to the NSPS for carbon monoxide (CO) in 40 CFR 60.103.	Not applicable.	Continuous emission monitoring system to measure and record the concentration by volume (dry basis) of CO emissions from each catalyst regenerator vent.
2. Not subject to the NSPS for CO in 40 CFR 60.103.	a. Thermal incinerator.	Continuous emission monitoring system to measure and record the concentration by volume (dry basis) of CO emissions from each catalyst regenerator vent; or continuous parameter monitoring systems to measure and record the combustion zone temperature and oxygen content (percent, dry basis) in the incinerator vent stream.
	b. Process heater or boiler with a design heat input capacity under 44 MW or process heater or boiler in which all vent streams are not introduced into the flame zone.	Continuous emission monitoring system to measure and record the concentration by volume (dry basis) of CO emissions from each catalyst regenerator vent; or continuous parameter monitoring systems to measure and record the combustion zone temperature.
	c. Flare	Monitoring device such as a thermocouple, an ultraviolet beam sensor, or infrared sensor to continuously detect the presence of a pilot flame.
	d. No control device	Continuous emission monitoring system to measure and record the concentration by volume (dry basis) of CO emissions from each catalyst regenerator vent.

[67 FR 17773, Apr. 11, 2002, as amended at 70 FR 6942 and 6948, Feb. 9, 2005]

Table 11 to Subpart UUU of Part 63. – Requirements for Performance Tests for Organic HAP Emissions From Catalytic Cracking Units Not Subject to New Source Performance Standard (NSPS) for Carbon Monoxide (CO)

As stated in §63.1565(b)(2) and (3), you shall meet each requirement in the following table that applies to you

For...	You must...	Using...	According to these requirements...
1. Each new or existing catalytic cracking unit catalyst regenerator vent.	a. Select sampling port's location and the number of traverse ports.	Method 1 or 1A in appendix A to part 60 of this chapter.	Sampling sites must be located at the outlet of the control device or the outlet of the regenerator, as applicable, and prior to any releases to the atmosphere.
	b. Determine velocity and volumetric flow rate.	Method 2, 2A, 2D, 2F, or 2G in appendix A to part 60 of this chapter, as applicable.	
	c. Conduct gas molecular weight analysis.	Method 3, 3A, or 3B in appendix A to part 60 of this chapter, as applicable.	
	d. Measure moisture content of the stack gas.	Method 4 in appendix A to part 60 of this chapter.	
2. For each new or existing catalytic cracking unit catalyst regenerator vent if you use a continuous emission monitoring system.	Measure CO emissions.	Data from your continuous emission monitoring system.	Collect CO monitoring data for each vent for 24 consecutive operating hours; and reduce the continuous emission monitoring data to 1-hour averages computed from four or more data points equally spaced over each 1-hour period.
3. Each catalytic cracking unit catalyst regenerator vent if you use continuous parameter monitoring systems.	a. Measure the CO concentration (dry basis) of emissions exiting the control device.	Method 10, 10A, or 10B in appendix A to part 60 of this chapter, as applicable.	
	b. Establish each operating limit in Table 9 of this subpart that applies to you.	Data from the continuous parameter monitoring systems.	
	c. Thermal incinerator combustion zone temperature.	Data from the continuous parameter monitoring systems.	Collect temperature monitoring data every 15 minutes during the entire period of the CO initial performance test; and determine and record the minimum hourly average combustion zone temperature from all the readings.

For...	You must...	Using...	According to these requirements...
	d. Thermal incinerator: oxygen, content (percent, dry basis) in the incinerator vent stream.	Data from the continuous parameter monitoring systems.	Collect oxygen concentration (percent, dry basis) monitoring data every 15 minutes during the entire period of the CO initial performance test; and determine and record the minimum hourly average percent excess oxygen concentration from all the readings.
	e. If you use a process heater or boiler with a design heat input capacity under 44 MW or process heater or boiler in which all vent streams are not introduced into the flame zone, establish operating limit for combustion zone temperature.	Data from the continuous parameter monitoring systems.	Collect the temperature monitoring data every 15 minutes during the entire period of the CO initial performance test; and determine and record the minimum hourly average combustion zone temperature from all the readings.
	f. If you use a flare, conduct visible emission observations.	Method 22 (40 CFR part 60, appendix A).	Maintain a 2-hour observation period; and record the presence of a flame at the pilot light over the full period of the test.
	g. If you use a flare, determine that the flare meets the requirements for net heating value of the gas being combusted and exit velocity.	40 CFR 60.11(b)(6)through(8).	

[67 FR 17773, Apr. 11, 2002, as amended at 70 FR 6942 and 6948, Feb. 9, 2005]

Table 12 to Subpart UUU of Part 63. – Initial Compliance With Organic HAP Emission Limits for Catalytic Cracking Units

As stated in §63.1565(b)(4), you shall meet each requirement in the following table that applies to you

For each new and existing catalytic cracking unit...	For the following emission limit...	You have demonstrated initial compliance if...
1. Subject to the NSPS for carbon monoxide (CO) in 40 CFR 60.103.	CO emissions from your catalyst regenerator vent or CO boiler serving the catalytic cracking unit must not exceed 500 ppmv (dry basis).	You have already conducted a performance test to demonstrate initial compliance with the NSPS and the measured CO emissions are less than or equal to 500 ppm (dry basis). As part of the Notification of Compliance Status, you must certify that your vent meets the CO limit. You are not required to conduct another performance test to demonstrate initial compliance. You have already conducted a performance evaluation to demonstrate initial compliance with the applicable performance specification. As part of your Notification of Compliance Status, you must certify that your continuous emission monitoring system meets the applicable requirements in §63.1572. You are not required to conduct another performance evaluation to demonstrate initial compliance.
2. Not subject to the NSPS for CO in 40 CFR 60.103.	a. CO emissions from your catalyst regenerator vent or CO boiler serving the catalytic cracking unit must not exceed 500 ppmv (dry basis).	i. If you use a continuous parameter monitoring system, the average CO emissions measured by Method 10 over the period of the initial performance test are less than or equal to 500 ppmv (dry basis). ii. If you use a continuous emission monitoring system, the hourly average CO emissions over the 24-hour period for the initial performance test are not more than 500 ppmv (dry basis); and your performance evaluation shows your continuous emission monitoring system meets the applicable requirements in §63.1572.
	b. If you use a flare, visible emissions must not exceed a total of 5 minutes during any 2 operating hours.	Visible emissions, measured by Method 22 during the 2-hour observation period during the initial performance test, are no higher than 5 minutes.

[67 FR 17773, Apr. 11, 2002, as amended at 70 FR 6942 and 6948, Feb. 9, 2005]

Table 13 to Subpart UUU of Part 63 – Continuous Compliance With Organic HAP Emission Limits for Catalytic Cracking Units

As stated in §63.1565(c)(1), you shall meet each requirement in the following table that applies to you

For each new and existing catalytic cracking unit...	Subject to this emission limit for your catalyst regenerator vent...	If you must...	You shall demonstrate continuous compliance by...
1. Subject to the NSPS for carbon monoxide (CO) in 40 CFR 60.103.	CO emissions from your catalyst regenerator vent or CO boiler serving the catalytic cracking unit must not exceed 500 ppmv (dry basis).	Continuous emission monitoring system.	Collecting the hourly average CO monitoring data according to §63.1572; and maintaining the hourly average CO concentration at or below 500 ppmv (dry basis).
2. Not subject to the NSPS for CO in 40 CFR 60.103.	i. CO emissions from your catalyst regenerator vent or CO boiler serving the catalytic cracking unit must not exceed 500 ppmv (dry basis).	Continuous emission monitoring system.	Same as above.
	ii. CO emissions from your catalyst regenerator vent or CO boiler serving the catalytic cracking unit must not exceed 500 ppmv (dry basis).	Continuous parameter monitoring system.	Maintaining the hourly average CO concentration below 500 ppmv (dry basis).
	iii. Visible emissions from a flare must not exceed a total of 5 minutes during any 2-hour period.	Control device – flare....	Maintaining visible emissions below a total of 5 minutes during any 2-hour operating period.

[67 FR 17773, Apr. 11, 2002, as amended at 70 FR 6942 and 6948, Feb. 9, 2005]

Table 14 to Subpart UUU of Part 63 – Continuous Compliance With Operating Limits for Organic HAP Emissions From Catalytic Cracking Units

As stated in §63.1565(c)(1), you shall meet each requirement in the following table that applies to you

For each new existing catalytic cracking unit...	If you use...	For this operating limit...	You shall demonstrate continuous compliance by ...
1. Subject to NSPS for carbon monoxide (CO) in 40 CFR 60.103.	Continuous emission monitoring system.	Not applicable.....	Complying with Table 13 of this subpart.
2. Not subject to the NSPS for CO in 40 CFR 60.103.	a. Continuous emission monitoring system.	Not applicable.....	Complying with Table 13 of this subpart.
	b. Continuous parameter monitoring systems – thermal incinerator.	i. The daily average combustion zone temperature must not fall below the level established during the performance test.	Collecting the hourly and daily average temperature monitoring data according to §63.1572; and maintaining the daily average combustion zone temperature above the limit established during the performance test.
		ii. The daily average oxygen concentration in the vent stream (percent, dry basis) must not fall below the level established during the performance test.	Collecting the hourly and daily average oxygen concentration monitoring data according to §63.1572; and maintaining the daily average oxygen concentration above the limit established during the performance test.
	c. Continuous parameter monitoring systems -- boiler or process heater with a design heat input capacity under 44 MW or boiler or process heater in which all vent streams are not introduced into the flame zone.	The daily combustion zone temperature must not fall below the level established in the performance test.	Collecting the average hourly and daily temperature monitoring data according to §63.1572; and maintaining the daily average combustion zone temperature above the limit established during the performance test.
	d. Continuous parameter monitoring system – flare.	The flare pilot light must be present at all times and the flare must be operating at all times that emissions may be vented to it.	Collecting the flare monitoring data according to §63.1572; and recording for each 1-hour period whether the monitor was continuously operating and the pilot light was continuously present during each 1-hour period.

[67 FR 17773, Apr. 11, 2002, as amended at 70 FR 6942 and 6948, Feb. 9, 2005]

Table 15 to Subpart UUU of Part 63. – Organic HAP Emission Limits for Catalytic Reforming Units

As stated in §63.1566(a)(1), you shall meet each emission limitation in the following table that applies to you

For each applicable process vent for a new or existing catalytic reforming unit...	You shall meet this emission limit during initial catalyst depressuring and catalyst purging operations...
1. Option 1.....	Vent emissions to a flare that meets the requirements for control devices in §63.11(b). Visible emissions from a flare must not exceed a total of 5 minutes during any 2-hour operating period.
2. Option 2.....	Reduce uncontrolled emissions of total organic compounds (TOC) or nonmethane TOC from your process vent by 98 percent by weight using a control device or to a concentration of 20 ppmv (dry basis as hexane), corrected to 3 percent oxygen, whichever is less stringent. If you vent emissions to a boiler or process heater to comply with the percent reduction or concentration emission limitation, the vent stream must be introduced into the flame zone, or any other location that will achieve the percent reduction or concentration standard.

[67 FR 17773, Apr. 11, 2002, as amended at 70 FR 6942 and 6951, Feb. 9, 2005]

Table 16 to Subpart UUU of Part 63. – Operating Limits for Organic HAP Emissions From Catalytic Reforming Units

As stated in §63.1566(a)(2), you shall meet each operating limit in the following table that applies to you

For each new or existing catalytic reforming unit...	For this type of control device...	You shall meet this operating limit during initial catalyst depressuring and purging operations...
1. Option 1: vent to flare..	Flare that meets the requirements for control devices in §63.11(b).	The flare pilot light must be present at all times and the flare must be operating at all times that emissions may be vented to it.
2. Option 2: Percent reduction or concentration limit.	a. Thermal incinerator, boiler or process heater with a design heat input capacity under 44 MW, or boiler or process heater in which all vent streams are not introduced into the flame zone.	The daily average combustion zone temperature must not fall below the limit established during the performance test.
	b. No control device	Operate at all times according to your operation, maintenance, and monitoring plan regarding minimum catalyst purging conditions that must be met prior to allowing uncontrolled purge releases.

[67 FR 17773, Apr. 11, 2002, as amended at 70 FR 6942 and 6951, Feb. 9, 2005]

Table 17 to Subpart UUU of Part 63. – Continuous Monitoring Systems for Organic HAP Emissions From Catalytic Reforming Units

As stated in §63.1566(b)(1), you shall meet each requirement in following table that applies to you

For each applicable process vent for a new or existing catalytic reforming unit...	If you use this type of control device...	You shall install and operate this type of continuous monitoring system..
1. Option 1: vent to a flare...	Flare that meets the requirements for control devices in §63.11(b).	Monitoring device such as a thermocouple, an ultraviolet beam sensor, or infrared sensor to continuously detect the presence of a pilot flame.
2. Option 2: percent reduction or concentration limit.	Thermal incinerator, process heater or boiler with a design heat input capacity under 44 MW, or process heater or boiler in which all vent streams are not introduced into the flame zone.	Continuous parameter monitoring systems to measure and record the combustion zone temperature.

[67 FR 17773, Apr. 11, 2002, as amended at 70 FR 6942 and 6952, Feb. 9, 2005]

Table 18 to Subpart UUU of Part 63. – Requirements for Performance Tests for Organic HAP Emissions From Catalytic Reforming Units

As stated in §63.1566(b)(2) and (3), you shall meet each requirement in the following table that applies to you.

For each new or exiting catalytic reforming unit...	You must...	Using...	According to these requirements...
1. Option 1: vent to a flare.	a. Conduct visible emission observations.	Method 22 (40 CFR 60, appendix A).	2-hour observation period. Record the presence of a flame at the pilot light over the full period of the test.
	b. Determine that the flare meets the requirements for net heating value of the gas being combusted and exit velocity.	Not applicable.	40 CFR 63.11(b)(6) through (8)

For each new or exiting catalytic reforming unit...	You must...	Using...	According to these requirements...
2. Option 2: percent reduction or concentration limit.	a. Select sampling site.	Method 1 or 1A (40 CFR part 60, appendix A). No traverse site selection method is needed for vents smaller than 0.10 meter in diameter.	Sampling sites must be located at the inlet (if you elect the emission reduction standard) and outlet of the control device and prior to any releases to the atmosphere.
	b. Measure gas volumetric flow rate.	Method 2, 2A, 2C, 2D, 2F, or 2G (40 CFR part 60, appendix A), as applicable.	
	c. Measure TOC concentration (for percent reduction standard).	Method 25 (40 CFR part 60, appendix A) to measure TOC concentration (in carbon equivalents) at the inlet and outlet of the control device. If the non-methane TOC outlet concentration is expected to be less than 50 ppm (as carbon), you can use Method 25A to measure TOC concentration (as hexane) at the inlet and the outlet of the control device. If you use Method 25A, you may use Method 18 (40 CFR part 60, appendix A) to measure the methane concentration to determine the nonmethane TOC concentration.	Take either an integrated sample or four grab samples during each run. If you use a grab sampling technique, take the samples at approximately equal intervals in time, such as 15-minute intervals during the run.
	d. Calculate TOC or non-methane TOC emission rate and mass emission reduction.	.....	Calculate emission rate by Equation 1 of §63.1566 (if you use Method 25) or Equation 2 of §63.1566 (if you use Method 25A). Calculate mass emission reduction by Equation 3 of §63.1566.
	e. For concentration standard, measure TOC concentration. (Optional: Measure methane concentration.)	Method 25A (40 CFR part 60, appendix A) to measure TOC concentration (as hexane) at the outlet of the control device. You may elect to use Method 18 (40 CFR part 60, appendix A) to measure the methane concentration.	
	f. Determine oxygen content in the gas stream at the outlet of the control device.	Method 3A or 3B (40 CFR part 60, appendix A),as applicable.	
	g. Calculate the TOC or non-methane TOC concentration corrected for oxygen content (for concentration standard.)	Equation 4 of §63.1566	
	h. Establish each operating limit in Table 16 of this subpart that applies to you for a thermal incinerator, or process heater or boiler with a design heat input capacity under 44 MW, or process heater or boiler in which all vent streams are not introduced into the flame zone.	Data from the continuous parameter monitoring systems.	Collect the temperature monitoring data every 15 minutes during the entire period of the initial TOC performance test. Determine and record the minimum hourly average combustion zone temperature.
	i. If you do not use a control device, document the purging conditions used prior to testing following the minimum requirements in the operation, maintenance, and monitoring plan.	Data from monitoring systems as identified in the operation, maintenance, and monitoring plan.	Procedures in the operation, maintenance, and monitoring plan.

[67 FR 17773, Apr. 11, 2002, as amended at 70 FR 6942 and 6952, Feb. 9, 2005]

TABLE 19 TO SUBPART UUU OF PART 63—INITIAL COMPLIANCE WITH ORGANIC HAP EMISSION LIMITS FOR CATALYTIC REFORMING UNITS

As stated in §63.1566(b)(7), you shall meet each requirement in the following table that applies to you.

For each applicable process vent for a new or existing catalytic reforming unit . . .	For the following emission limit . .	You have demonstrated initial compliance if . . .
Option 1	Visible emissions from a flare must not exceed a total of 5 minutes during any 2 consecutive hours.	Visible emissions, measured using Method 22 over the 2-hour observation period of the performance test, do not exceed a total of 5 minutes.
Option 2	Reduce uncontrolled emissions of total organic compounds (TOC) or nonmethane TOC from your process vent by 98 percent by weight using a control device or to a concentration of 20 ppmv (dry basis as hexane), corrected to 3 percent oxygen, whichever is less stringent.	The mass emission reduction of nonmethane TOC measured by Method 25 over the period of the performance test is at least 98 percent by weight as calculated using Equations 1 and 3 of §63.1566; or the mass emission reduction of TOC measured by Method 25A (or nonmethane TOC measured by Methods 25A and 18) over the period of the performance test is at least 98 percent by weight as calculated using Equations 2 and 3 of §63.1566; or the TOC concentration measured by Method 25A (or the nonmethane TOC concentration measured by Methods 25A and 18) over the period of the performance test does not exceed 20 ppmv (dry basis as hexane) corrected to 3 percent oxygen as calculated using Equation 4 of §63.1566.

[70 FR 6953, Feb. 9, 2005]

TABLE 20 TO SUBPART UUU OF PART 63—CONTINUOUS COMPLIANCE WITH ORGANIC HAP EMISSION LIMITS FOR CATALYTIC REFORMING UNITS

As stated in §63.1566(c)(1), you shall meet each requirement in the following table that applies to you.

For each applicable process vent for a new or existing catalytic reforming unit . . .	For this emission limit . . .	You shall demonstrate continuous compliance during initial catalyst depressuring and catalyst purging operations by . . .
1. Option 1	Vent emissions from your process vent to a flare that meets the requirements in §63.11(b).	Maintaining visible emissions from a flare below a total of 5 minutes during any 2 consecutive hours.
2. Option 2	Reduce uncontrolled emissions of total organic compounds (TOC) or nonmethane TOC from your process vent by 98 percent by weight using a control device or to a concentration of 20 ppmv (dry basis as hexane), corrected to 3 percent oxygen, whichever is less stringent.	Maintaining a 98 percent by weight emission reduction of TOC or nonmethane TOC; or maintaining a TOC or nonmethane TOC concentration of not more than 20 ppmv (dry basis as hexane), corrected to 3 percent oxygen, whichever is less stringent.

[70 FR 6954, Feb. 9, 2005]

TABLE 21 TO SUBPART UUU OF PART 63—CONTINUOUS COMPLIANCE WITH OPERATING LIMITS FOR ORGANIC HAP EMISSIONS FROM CATALYTIC REFORMING UNITS

As stated in §63.1566(c)(1), you shall meet each requirement in the following table that applies to you.

TABLE 21 TO SUBPART UUU OF PART 63.—CONTINUOUS COMPLIANCE WITH OPERATING LIMITS FOR ORGANIC HAP EMISSIONS FROM CATALYTIC REFORMING UNITS

[As stated in §63.1566(c)(1), you shall meet each requirement in the following table that applies to you.]

For each applicable process vent for a new or existing catalytic reforming unit	If you use .	For this operating limit .	You shall demonstrate continuous compliance during initial catalyst depressuring and purging operations by .
1. Option 1	Flare that meets the requirements in §63.11(b).	The flare pilot light must be present at all times and the flare must be operating at all times that emissions may be vented to it.	Collecting flare monitoring data according to §63.1572; and recording for each 1-hour period whether the monitor was continuously operating and the pilot light was continuously present during each 1-hour period.
2. Option 2	a. Thermal incinerator boiler or process heater with a design input capacity under 44 MW or boiler or process heater in which not all vent streams are not introduced into the flame zone.	Maintain the daily average combustion zone temperature above the limit established during the performance test.	Collecting, the hourly and daily temperature monitoring data according to §63.1572; and maintaining the daily average combustion zone temperature above the limit established during the performance test.
	b. No control device	Operate at all times according to your operation, maintenance, and monitoring plan regarding minimum purging conditions that must be met prior to allowing uncontrolled purge releases.	Recording information to document compliance with the procedures in your operation, maintenance, and monitoring plan.

[70 FR 6954, Feb. 9, 2005]

TABLE 22 TO SUBPART UUU OF PART 63—INORGANIC HAP EMISSION LIMITS FOR CATALYTIC REFORMING UNITS

As stated in §63.1567(a)(1), you shall meet each emission limitation in the following table that applies to you.

For . . .	You shall meet this emission limit for each applicable catalytic reforming unit process vent during coke burn-off and catalyst rejuvenation .
1. Each existing semi-regenerative catalytic reforming unit	Reduce uncontrolled emissions of hydrogen chloride (HCl) by 92 percent by weight or to a concentration of 30 ppmv (dry basis), corrected to 3 percent oxygen.
2. Each existing cyclic or continous catalytic reforming unit	Reduce uncontrolled emissions of HCl by 97 percent by weight or to a concentration of 10 ppmv (dry basis), corrected to 3 percent oxygen.
3 Each new semi-regenerative, cyclic, or continous catalytic reforming unit.	Reduce uncontrolled emissions of HCl by 97 percent by weight or to a concentration of 10 ppmv (dry basis), corrected to 3 percent oxygen.

[70 FR 6955, Feb. 9, 2005]

TABLE 23 TO SUBPART UUU OF PART 63—OPERATING LIMITS FOR INORGANIC HAP EMISSION LIMITATIONS FOR CATALYTIC REFORMING UNITS

As stated in §63.1567(a)(2), you shall meet each operating limit in the following table that applies to you.

For each applicable process vent for a new or existing catalytic reforming unit with this type of control device	You shall meet this operating limit during coke burn-off and catalyst rejuvenation . .
1. Wet scrubber	The daily average pH or alkalinity of the water (or scrubbing liquid) exiting the scrubber must not fall below the limit established during the performance test; and the daily average liquid-to-gas ratio must not fall below the limit established during the performance test.
2. Internal scrubbing system or no control device (*e.g.*, hot regen system) meeting outlet HCl concentration limit.	The daily average HCl concentration in the catalyst regenerator exhaust gas must not exceed the limit established during the performance test.

For each applicable process vent for a new or existing catalytic reforming unit with this type of control device . . .	You shall meet this operating limit during coke burn-off and catalyst rejuvenation . . .
3. Internal scrubbing system meeting HCl percent reduction standard.	The daily average pH or alkalinity of the water (or scrubbing liquid) exiting the internal scrubbing system must not fall below the limit established during the performance test; and the daily average liquid-to-gas ratio must not fall below the limit established during the performance test.
4. Fixed-bed gas-solid adsorption system	The daily average temperature of the gas entering or exiting the adsorption system must not exceed the limit established during the performance test; and the HCl concentration in the adsorption system exhaust gas must not exceed the limit established during the performance test.
5. Moving-bed gas-solid adsorption system (*e.g.*, Chlorsorb™ System).	The daily average temperature of the gas entering or exiting the adsorption system must not exceed the limit established during the performance test; and the weekly average chloride level on the sorbent entering the adsorption system must not exceed the design or manufacturer's recommended limit (1.35 weight percent for the Chlorsorb™ System); and the weekly average chloride level on the sorbent leaving the adsorption system must not exceed the design or manufacturer's recommended limit (1.8 weight percent for the Chlorsorb™ System).

[70 FR 6955, Feb. 9, 2005]

TABLE 24 TO SUBPART UUU OF PART 63—CONTINUOUS MONITORING SYSTEMS FOR INORGANIC HAP EMISSIONS FROM CATALYTIC REFORMING UNITS

As stated in §63.1567(b)(1), you shall meet each requirement in the following table that applies to you.

If you use this type of control device for your vent . . .	You shall install and operate this type of continuous monitoring system . . .
1. Wet scrubber	Continuous parameter monitoring system to measure and record the total water (or scrubbing liquid) flow rate entering the scrubber during coke burn-off and catalyst rejuvenation; and continuous parameter monitoring system to measure and record gas flow rate entering or exiting the scrubber during coke burn-off and catalyst rejuvenation [1]; and continuous parameter monitoring system to measure and record the pH or alkalinity of the water (or scrubbing liquid) exiting the scrubber during coke burn-off and catalyst rejuvenation. [2]
2. Internal scrubbing system or no control device (e.g., hot regen system) to meet HC1 outlet concentration limit.	Colormetric tube sampling system to measure the HC1 concentration in the catalyst regenerator exhaust gas during coke burn-off and catalyst rejuvenation. The colormetric tube sampling system must meet the requirements in Table 41 of this subpart.
3. Internal scrubbing system to meet HC1 percent reduction standard.	Continuous parameter monitoring system to measure and record the gas flow rate entering or exiting the internal scrubbing system during coke burn-off and catalyst rejuvenation; and continuous parameter monitoring system to measure and record the total water (or scrubbing liquid) flow rate entering the internal scrubbing system during coke burn-off and catalyst rejuvenation; and continuous parameter monitoring system to measure and record the pH or alkalinity of the water (or scrubbing liquid) exiting the internal scrubbing system during coke burn-off and catalyst rejuvenation. [2]
4. Fixed-bed gas-solid adsorption system	Continuous parameter monitoring system to measure and record the temperature of the gas entering or exiting the adsorption system during coke burn-off and catalyst rejuvenation; and colormetric tube sampling system to measure the gaseous HC1 concentration in the adsorption system exhaust and at a point within the absorbent bed not to exceed 90 percent of the total length of the absorbent bed during coke burn-off and catalyst rejuvenation. The colormetric tube sampling system must meet the requirements in Table 41 of this subpart.
5. Moving-bed gas-solid adsorption system (e.g., Chlorsorb™ System)..	Continuous parameter monitoring system to measure and record the temperature of the gas entering or exiting the adsorption system during coke burn-off and catalyst rejuvenation.

[1] If applicable, you can use the alternative in §63.1573 (a)(1) instead of a continuous parameter monitoring system for gas flow rate or instead of a continuous parameter monitoring system for the cumulative volume of gas.

[2] If applicable, you can use the alternative in § 63.1573(b)(1) instead of a continuous parameter monitoring system for pH of the water (or scrubbing liquid) or the alternative in § 63.1573(b)(2) instead of a continuous parameter monitoring system for alkalinity of the water (or scrubbing liquid).

[70 FR 6956, Feb. 9, 2005]

TABLE 25 TO SUBPART UUU OF PART 63—REQUIREMENTS FOR PERFORMANCE TESTS FOR INORGANIC HAP EMISSIONS FROM CATALYTIC REFORMING UNITS

As stated in § 63.1567(b)(2) and (3), you shall meet each requirement in the following table that applies to you.

For each new and existing catalytic reforming unit using . . .	You shall . .	Using . . .	According to these requirements
1. Any or no control system.	a. Select sampling port location(s) and the number of traverse points.	Method 1 or 1A (40 CFR part 60, appendix A), as applicable.	(1) If you operate a control device and you elect to meet an applicable HCl percent reduction standard, sampling sites must be located at the inlet of the control device or internal scrubbing system and at the outlet of the control device or internal scrubber system prior to any release to the atmosphere. For a series of fixed-bed systems, the outlet sampling site should be located at the outlet of the first fixed-bed, prior to entering the second fixed-bed in the series. (2) If you elect to meet an applicable HCl outlet concentration limit, locate sampling sites at the outlet of the control device or internal scrubber system prior to any release to the atmosphere. For a series of fixed-bed systems, the outlet sampling site should be located at the outlet of the first fixed-bed, prior to entering the second fixed-bed in the series. If there is no control device, locate sampling sites at the outlet of the catalyst regenerator prior to any release to the atmosphere
	b. Determine velocity and volumetric flow rate.	Method 2, 2A, 2C, 2D, 2F, or 2G (40 CFR part 60, appendix A), as applicable..	
	c. Conduct gas molecular weight analysis.	Method 3, 3A, or 3B (40 CFR part 60, appendix A), as applicable.	
	d. Measure moisture content of the stack gas.	Method 4 (40 CFR part 60, appendix A).	
	e. Measure the HCl concentration at the selected sampling locations.	Method 26 or 26A (40 CFR part 60, appendix A). If your control device is a wet scrubber or internal scrubbing system, you must use Method 26A.	(1) For semi-regenerative and cyclic regeneration units, conduct the test during the coke burn-off and catalyst rejuvenation cycle, but collect no samples during the first hour or the last 6 hours of the cycle (for semi- regenerative units) or during the first hour or the last 2 hours of the cycle (for cyclic regeneration units). For continuous regeneration units, the test should be conducted no sooner than 3 days after process unit or control system start up. (2) Determine and record the HCl concentration corrected to 3 percent oxygen (using Equation 1 of § 63.1567) for each sampling location for each test run. (3) Determine and record the percent emission reduction, if applicable, using Equation 3 of § 63.1567 for each test run. (4) Determine and record the average HCl concentration (corrected to 3 percent oxygen) and the average percent emission reduction, if applicable, for the overall source test from the recorded test run values.

For each new and existing catalytic reforming unit using . . .	You shall . . .	Using . . .	According to these requirements . . .
2. Wet scrubber	a. Establish operating limit for pH level or alkalinity.	i. Data from continuous parameter monitoring systems.	Measure and record the pH or alkalinity of the water (or scrubbing liquid) exiting scrubber every 15 minutes during the entire period of the performance test. Determine and record the minimum hourly average pH or alkalinity level from the recorded values.
		ii. Alternative pH procedure in § 63.1573 (b)(1).	Measure and record the pH of the water (or scrubbing liquid) exiting the scrubber during coke burn-off and catalyst rejuvenation using pH strips at least three times during each test run. Determine and record the average pH level for each test run. Determine and record the minimum test run average pH level.
		iii. Alternative alkalinity method in § 63.1573(b)(2).	Measure and record the alkalinity of the water (or scrubbing liquid) exiting the scrubber during coke burn-off and catalyst rejuvenation using discrete titration at least three times during each test run. Determine and record the average alkalinity level for each test run. Determine and record the minimum test run average alkalinity level.
	b. Establish operating limit for liquid-to-gas ratio.	i. Data from continuous parameter monitoring systems.	Measure and record the gas flow rate entering or exiting the scrubber and the total water (or scrubbing liquid) flow rate entering the scrubber every 15 minutes during the entire period of the performance test. Determine and record the hourly average gas flow rate and total water (or scrubbing liquid) flow rate. Determine and record the minimum liquid-to-gas ratio from the recorded, paired values.
		ii. Alternative procedure for gas flow rate in § 63.1573(a)(1).	Collect air flow rate monitoring data or determine the air flow rate using control room instruments every 15 minutes during the entire period of the initial performance test. Determine and record the hourly average rate of all the readings. Determine and record the maximum gas flow rate using Equation 1 of § 63.1573.
3. Internal scrubbing system or no control device (e.g., hot regen system) meeting HCl outlet concentration limit.	Establish operating limit for HCl concentration.	Data from continuous parameter monitoring system.	Measure and record the HCl concentration in the catalyst regenerator exhaust gas using the colormetric tube sampling system at least three times during each test run. Determine and record the average HCl concentration for each test run. Determine and record the average HCl concentration for the overall source test from the recorded test run averages. Determine and record the operating limit for HCl concentration using Equation 4 of § 63.1567.
4. Internal scrubbing system meeting HCl percent reduction standard.	a. Establish operating limit for pH level or alkalinity.	i. Data from continuous parameter monitoring system.	Measure and record the pH alkalinity of the water (or scrubbing liquid) exiting the internal scrubbing system every 15 minutes during the entire period of the performance test. Determine and record the minimum hourly average pH or alkalinity level from the recorded values.
		ii. Alternative pH method in § 63.1573(b)(1).	Measure and in record pH of the water (or scrubbing liquid) exiting the internal scrubbing system during coke burn-off and catalyst rejuvenation using pH strips at least three times during each test run. Determine and record the average pH level for each test run. Determine and record the minimum test run average pH level.
		iii. Alternative alkalinity method in § 63.1573(b)(2)	Measure and record the alkalinity water (or scrubbing liquid) exiting the internal scrubbing system during coke burn-off and catalyst rejuvenation using discrete titration at least three times during each test run. Determine and record the average alkalinity level for each test run. Determine and record the minimum test run average alkalinity level.

For each new and existing catalytic reforming unit using . . .	You shall . . .	Using . . .	According to these requirements . . .
	b. Establish operating limit for liquid-to-gas ratio.	Data from continuous parameter monitoring systems.	Measure and record the gas entering or exiting the internal scrubbing system and the total water (or scrubbing liquid) flow rate entering the internal scrubbing system every 15 minutes during the entire period of the performance test. Determine and record the hourly average gas flow rate and total water (or scrubbing liquid) flow rate. Determine and record the minimum liquid-to-gas ratio from the recorded, paired values.
5. Fixed-bed gas-solid adsorption system. Gas-solid.	a. Establish operating limit for temperature.	Data from continuous parameter monitoring system.	Measure and record the temperature of gas entering or exiting the adsorption system every 15 minutes. Determine and record the maximum hourly average temperature.
	b. Establish operating limit for HCl concentration.	i. Data from continuous parameter monitoring systems.	(1) Measure and record the HCl concentration in the exhaust gas from the fixed-bed adsorption system using the colormetric tube sampling system at least three times during each test run. Determine and record the average HCl concentration for each test run. Determine and record the average HCl concentration for the overall source test from the recorded test run averages. (2) If you elect to comply with the HCl outlet concentration limit (Option 2), determine and record the operating limit for HCl concentration using Equation 4 of §63.1567. If you elect to comply with the HCl percent reduction standard (Option 1), determine and record the operating limit for HCl concentration using Equation 5 of §63.1567.
6. Moving-bed gas-solid adsorption system (e.g., Chlorsorb™ System).	a. Establish operating limit for temperature.	Data from continuous parameter monitoring systems.	Measure and record the temperature of gas entering or exiting the adsorption system every 15 minutes. Determine and record the maximum hourly average temperature
	b. Measure the chloride level on the sorbent entering and exiting the adsorption system.	Determination of Metal Concentration on Catalyst Particles (Instrumental Analyzer Procedure) in appendix A to subpart UUU; or EPA Method 5050 combined either with EPA Method 9056, or with EPA Method 9253; or EPA Method 9212 with the soil extraction procedures listed within the method.[1]	Measure and record the chloride concentration of the sorbent material entering and exiting the adsorption system at least three times during each test run Determine and record the average weight percent chloride concentration of the sorbent entering the adsorption system for each test run. Determine and record the average weight percent chloride concentration of the sorbent exiting the adsorption system for each test run.

[1] The EPA Methods 5050, 9056, 9212 and 9253 are included in "Test Methods for Evaluating Solid Waste, Physical/Chemical Methods," EPA Publication SW–846, Revision 5 (April 1998). The SW–846 and Updates (document number 955–001–00000–1) are available for purchase from the Superintendent of Documents, U.S. Government Printing Office, Washington, DC 20402, (202) 512–1800; and from the National Technical Information Services (NTIS), 5285 Port Royal Road, Springfield, VA 22161, (703) 487–4650. Copies may be inspected at the EPA Docket Center (Air Docket), EPA West, Room B–108, 1301 Constitution Ave., NW., Washington, DC; or at the Office of the Federal Register, 800 North Capitol Street, NW., Suite 700, Washington, DC. These methods are also available at *http://www.epa.gov/epaoswer/hazwaste/test/main.htm.*

[70 FR 6956, Feb. 9, 2005]

TABLE 26 TO SUBPART UUU OF PART 63—INITIAL COMPLIANCE WITH INORGANIC HAP EMISSION LIMITS FOR CATALYTIC REFORMING UNITS

As stated in §63.1567(b)(4), you shall meet each requirement in the following table that applies to you.

For . . .	For the following emission limit . . .	You have demonstrated initial compliance if . . .
1. Each existing semi-regenerative catalytic reforming unit.	Reduce uncontrolled emissions of HCl by 92 percent by weight or to a concentration of 30 ppmv, (dry basis), corrected to 3 percent oxygen.	Average emissions HCl measured using Method 26 or 26A, as applicable, over the period of the performance test, are reduced by 92 percent or to a concentration less than or equal to 30 ppmv (dry basis) corrected to 3 percent oxygen.
2. Each existing cyclic or continuous catalytic reforming unit and each new semi-regenerative, cyclic, or continuous catalytic reforming unit.	Reduce uncontrolled emissions of HCl by 97 percent by weight or to a concentration of 10 ppmv (dry basis), corrected to 3 percent oxygen.	Average emissions of HCl measured using Method 26 or 26A, as applicable, over the period of the performance test, are reduced by 97 percent or to a concentration less than or equal to 10 ppmv (dry basis) corrected to 3 percent oxygen.

[70 FR 6959, Feb. 9, 2005]

TABLE 27 TO SUBPART UUU OF PART 63—CONTINUOUS COMPLIANCE WITH INORGANIC HAP EMISSION LIMITS FOR CATALYTIC REFORMING UNITS

As stated in §63.1567(c)(1), you shall meet each requirement in the following table that applies to you.

For . . .	For this emission limit . .	You shall demonstrate continuous compliance during coke burn-off and catalyst rejuvenation by . . .
1. Each existing semi-regenerative catalytic reforming unit.	Reduce uncontrolled emissions of HCl by 92 percent by weight or to a concentration of 30 ppmv (dry basis), corrected to 3 percent oxygen..	Maintaining a 92 percent HCl emission reduction or an HCl concentration no more than 30 ppmv (dry basis), corrected to 3 percent oxygen.
2. Each existing cyclic or continuous catalytic reforming unit.	Reduce uncontrolled emissions of HCl by 97 percent by weight or to a concentration of 10 ppmv (dry basis), corrected to 3 percent oxygen.	Maintaining a 97 percent HCl control efficiency or an HCl concentration no more than 10 ppmv (dry basis), corrected to 3 percent oxygen.
3. Each new semi-regenerative, cyclic, or continuous catalytic reforming unit.	Reduce uncontrolled emissions of HCl by 97 percent by weight or to a concentration of 10 ppmv (dry basis), corrected to 3 percent oxygen.	Maintaining a 97 percent HCl control efficiency or an HCl concentration no more than 10 ppmv (dry basis), corrected to 3 percent oxygen.

[70 FR 6960, Feb. 9, 2005]

TABLE 28 TO SUBPART UUU OF PART 63—CONTINUOUS COMPLIANCE WITH OPERATING LIMITS FOR INORGANIC HAP EMISSIONS FROM CATALYTIC REFORMING UNITS

As stated in §63.1567(c)(1), you shall meet each requirement in the following table that applies to you.

TABLE 28 TO SUBPART UUU OF PART 63.—CONTINUOUS COMPLIANCE WITH OPERATING LIMITS FOR INORGANIC HAP EMISSIONS FROM CATALYTIC REFORMING UNITS

[As stated in §63.1567(c)(1), you shall meet each requirement in the following table that applies to you.]

For each new and existing catalytic reforming unit using this type of control device or system	For this operating limit . . .	You shall demonstrate continuous compliance during coke burn-off and catalyst rejuvenation by
1. Wet scrubber	a. The daily average pH or alkalinity of the water (or scrubbing liquid) exiting the scrubber must not fall below the level established during the performance test.	Collecting the hourly and daily average pH or alkalinity monitoring data according to §63.1572 [1]; and maintaining the daily average pH or alkalinity above the operating limit established during the performance test.
	b. The daily average liquid-to-gas ratio must not fall below the level established during the performance test.	Collecting the hourly average gas flow rate [2] and total water (or scrubbing liquid) flow rate monitoring data according to §63.1572; and determining and recording the hourly average liquid-to-gas ratio; and determining and recording the daily average liquid-to-gas ratio; and maintaining the daily average liquid-to-gas ratio above the limit established during the performance test.
2. Internal scrubbing system or no control device (e.g., hot regen system) meeting HCl concentration limit.	The daily average HCl concentration in the catalyst regenerator exhaust gas must not exceed the limit established during the performance test.	Measuring and recording the HCl concentration at least 4 times during a regeneration cycle (equally spaced in time) or every 4 hours, whichever is more frequent, using a colormetric tube sampling system; calculating the daily average HCl concentration as an arithmetic average of all samples collected in each 24-hour period from the start of the coke burn-off cycle or for the entire duration of the coke burn-off cycle if the coke burn-off cycle is less than 24 hours; and maintaining the daily average HCl concentration below the applicable operating limit.
3. Internal scrubbing system meeting percent HCl reduction standard.	a. The daily average pH or alkalinity of the water (or scrubbing liquid) exiting the internal scrubbing system must not fall below the limit established during the performance test.	Collecting the hourly and daily average pH or alkalinity monitoring data according to §63.1572 [1] and maintaining the daily average pH or alkalinity above the operating limit established during the performance test.
	b. The daily average liquid-to-gas ratio must not fall below the level established during the performance test.	Collecting the hourly average gas flow rate [2] and total water (or scrubbing liquid) flow rate monitoring data according to §63.1572; and determining and recording the hourly average liquid-to-gas ratio; and determining and recording the daily average liquid-to-gas ratio, and maintaining the daily average liquid-to-gas ratio above the limit established during the performance test.
4. Fixed-bed gas-solid adsorption systems.	a. The daily average temperature of the gas entering or exiting the adsorption system must not exceed the limit established during the performance test.	Collecting the hourly and daily average temperature monitoring data according to §63.1572; and maintaining the daily average temperature below the operating limit established during the performance test.
	b. The HCl concentration in the exhaust gas from the fixed-bed gas-solid adsorption system must not exceed the limit established during the performance test.	Measuring and recording the concentration of HCl weekly or during each regeneration cycle, whichever is less frequent, using a colormetric tube sampling system at a point within the adsorbent bed not to exceed 90 percent of the total length of the adsorption bed during coke-burn-off and catalyst rejuvenation; implementing procedures in the operating and maintenance plan if the HCl concentration at the sampling location within the adsorption bed exceeds the operating limit; and maintaining the HCl concentration in the gas from the adsorption system below the applicable operating limit.
5. Moving-bed gas-solid adsorption system (e.g., Chlorsorb™ System.	a. The daily average temperature of the gas entering or exiting the adsorption system must not exceed the limit established during the performance test.	Collecting the hourly and daily average temperature monitoring data according to §63.1572; and maintaining the daily average temperature below the operating limit established during the performance test

TABLE 28 TO SUBPART UUU OF PART 63.—CONTINUOUS COMPLIANCE WITH OPERATING LIMITS FOR INORGANIC HAP EMISSIONS FROM CATALYTIC REFORMING UNITS—Continued

[As stated in § 63.1567(c)(1), you shall meet each requirement in the following table that applies to you.]

For each new and existing catalytic reforming unit using this type of control device or system . . .	For this operating limit . . .	You shall demonstrate continuous compliance during coke burn-off and catalyst rejuvenation by . . .
	b. The weekly average chloride level on the sorbent entering the adsorption system must not exceed the design or manufacturer's recommended limit (1.35 weight percent for the Clorsorb™.	Collecting samples of the sorbent exiting the adsorption system three times per week (on non-consecutive days); and analyzing the samples for total chloride[3]; and determining and recording the weekly average chloride concentration; and maintaining the chloride concentration below the design or manufacturer's recommended limit (1.35 weight percent for the Chlorsorb™ System).
	c. The weekly average chloride level on the sorbent exiting the adsorption system must not exceed the design or manufacturer's recommended limit (1.8 weight percent for the Clorsorb™ System).	Collecting samples of the sorbent exiting the adsorption system three times per week (on non-consecutive days); and analyzing the samples for total chloride concentration; and determining and recording the weekly average chloride concentration; and maintaining the chloride concentration below the design or manufacturer's recommended limit (1.8 weight percent Chlorsorb™ System).

[1] If applicable, you can use either alternative in § 63.1573(b) instead of a continuous parameter monitoring system for pH or alkalinity if you used the alternative method in the initial performance test.

[2] If applicable, you can use the alternative in § 63.1573(a)(1) instead of a continuous parameter monitoring system for the gas flow rate or cumulative volume of gas entering or exiting the system if you used the alternative method in the initial performance test.

[3] The total chloride concentration of the sorbent material must be measured by the procedure, "Determination of Metal Concentration on Catalyst Particles (Instrumental Analyzer Procedure)" in appendix A to this subpart; or by using EPA Method 5050, Bomb Preparation Method for Solid Waste, combined either with EPA Method 9056, Determination of Inorganic Anions by Ion Chromatography, or with EPA Method 9253, Chloride (Titrimetric, Silver Nitrate); or by using EPA Method 9212, Potentiometric Determination of Chloride in Aqueous Samples with Ion-Selective Electrode, and using the soil extraction procedures listed within the method. The EPA Methods 5050, 9056, 9212 and 9253 are included in "Test Methods for Evaluating Solid Waste, Physical/Chemical Methods," EPA Publication SW–846, Revision 5 (April 1998). The SW–846 and Updates (document number 955–001–00000–1) are available for purchase from the Superintendent of Documents, U.S. Government Printing Office, Washington, DC 20402, (202) 512–1800; and from the National Technical Information Services (NTIS), 5285 Port Royal Road, Springfield, VA 22161, (703) 487–4650. Copies may be inspected at the EPA Docket Center (Air Docket), EPA West, Room B–108, 1301 Constitution Ave., NW., Washington, DC; or at the Office of the Federal Register, 800 North Capitol Street, NW., Suite 700, Washington, DC. These methods are also available at *http://www.epa.gov/epaoswer/hazwaste/test/main.htm.*

[70 FR 6954, Feb. 9, 2005]

TABLE 29 TO SUBPART UUU OF PART 63—HAP EMISSION LIMITS FOR SULFUR RECOVERY UNITS

As stated in § 63.1568(a)(1), you shall meet each emission limitation in the following table that applies to you.

For . .	You shall meet this emission limit for each process vent . . .
1. Each new or existing Claus sulfur recovery unit part of a sulfur recovery plant of 20 long tons per day or more and subject to the NSPS for sulfur oxides in 40 CFR 60.104(a)(2).	a. 250 ppmv (dry basis) of sulfur dioxide (SO_2) at zero percent excess air if you use an oxidation or reduction control system followed by incineration. b. 300 ppmv of reduced sulfur compounds calculated as ppmv SO_2 (dry basis) at zero percent excess air if you use a reduction control system without incineration.
2. Each new or existing sulfur recovery unit (Claus or other type, regardless of size) not subject to the NSPS for sulfur oxides in 40 CFR 60.104(a)(2): Option 1 (Elect NSPS).	a. 250 ppmv (dry basis) of SO_2 at zero percent excess air if you use an oxidation or reduction control system followed by incineration. b. 300 ppmv of reduced sulfur compounds calculated as ppmv SO_2 (dry basis) at zero percent excess air if you use a reduction control system without incineration.
3. Each new or existing sulfur recovery unit (Claus or other type, regardless of size) not subject to the NSPS for sulfur oxides in paragraph (a)(2) of 40 CFR 60.104: Option 2 (TRS limit).	300 ppmv of total reduced sulfur (TRS) compounds, expressed as an equivalent SO_2 concentration (dry basis) at zero percent oxygen.

[67 FR 17773, Apr. 11, 2002, as amended at 70 FR 6942, Feb. 9, 2005]

TABLE 30 TO SUBPART UUU OF PART 63—OPERATING LIMITS FOR HAP EMISSIONS FROM SULFUR RECOVERY UNITS

As stated in §63.1568(a)(2), you shall meet each operating limit in the following table that applies to you.

For	If use this type of control device	You shall meet this operating limit. .
1. Each new or existing Claus sulfur recovery unit part of a sulfur recovery plant of 20 long tons per day or more and subject to the NSPS for sulfur oxides in 40 CFR 60.104(a)(2).	Not applicable	Not applicable.
2. Each new or existing sulfur recovery unit (Claus or other type, regardless of size) not subject to the NSPS for sulfur oxides in 40 CFR 60.104(a)(2): Option 1 (Elect NSPS).	Not applicable	Not applicable.
3. Each new or existing sulfur recovery unit (Claus or other type, regardless of size) not subject to the NSPS for sulfur oxides in 40 CFR 60.104(a)(2): Option 2 (TRS limit).	Thermal incinerator	Maintain the daily average combustion zone temperature above the limit established during the performance test; and maintain the daily average oxygen concentration in the vent stream (percent, dry basis) above the limit established during the performance test.

[67 FR 17773, Apr. 11, 2002, as amended at 70 FR 6942, Feb. 9, 2005]

TABLE 31 TO SUBPART UUU OF PART 63—CONTINUOUS MONITORING SYSTEMS FOR HAP EMISSIONS FROM SULFUR RECOVERY UNITS

As stated in §63.1568(b)(1), you shall meet each requirement in the following table that applies to you.

For	For this limit	You shall install and operate this continuous monitoring system .
1. Each new or existing Claus sulfur recovery unit part of a sulfur recovery plant of 20 long tons per day or more and subject to the NSPS for sulfur oxides in 40 CFR 60.104(a)(2).	a. 250 ppmv (dry basis) of SO_2 at zero percent excess air if you use an oxidation or reduction control system followed by incineration.	Continuous emission monitoring system to measure and record the hourly average concentration of SO_2 (dry basis) at zero percent excess air for each exhaust stack. This system must include an oxygen monitor for correcting the data for excess air.
	b. 300 ppmv of reduced sulfur compounds calculated as ppmv SO_2 (dry basis) at zero percent excess air if you use a reduction control system without incineration.	Continuous emission monitoring system to measure and record the hourly average concentration of reduced sulfur and oxygen (O_2) emissions Calculate the reduced sulfur emissions as SO_2 (dry basis) at zero percent excess air. *Exception:* You can use an instrument having an air or SO_2 dilution and oxidation system to convert the reduced sulfur to SO_2 for continuously monitoring and recording the concentration (dry basis) at zero percent excess air of the resultant SO_2 instead of the reduced sulfur monitor. The monitor must include an oxygen monitor for correcting the data for excess oxygen.
2. Option 1: Elect NSPS. Each new or existing sulfur recovery unit (Claus or other type, regardless of size) not subject to the NSPS for sulfur oxides in paragraph (a) (2) of 40 CFR 60.104.	a. 250 ppmv (dry basis) of SO_2 at zero percent excess air if you use an oxidation or reduction control system followed by incineration.	Continuous emission monitoring system to measure and record the hourly average concentration of SO_2 (dry basis), at zero percent excess air for each exhaust stack. This system must include an oxygen monitor for correcting the data for excess air.

For . .	For this limit . . .	You shall install and operate this continuous monitoring system . . .
	b. 300 ppmv of reduced sulfur compounds calculated as ppmv SO_2 (dry basis) at zero percent excess air if you use a reduction control system without incineration.	Continuous emission monitoring system to measure and record the hourly average concentration of reduced sulfur and O_2 emissions for each exhaust stack. Calculate the reduced sulfur emissions as SO_2 (dry basis), at zero percent excess air. *Exception:* You can use an instrument having an air or O_2 dilution and oxidation system to convert the reduced sulfur to SO_2 for continuously monitoring and recording the concentration (dry basis) at zero percent excess air of the resultant SO_2 instead of the reduced sulfur monitor. The monitor must include an oxygen monitor for correcting the data for excess oxygen.
3. Option 2: TRS limit. Each new or existing sulfur recovery unit (Claus or other type, regardless of size) not subject to the NSPS for sulfur oxides in 40 CFR 60.104(a)(2).	300 ppmv of total reduced sulfur (TRS) compounds, expressed as an equivalent SO_2 concentration (dry basis) at zero percent oxygen.	i. Continuous emission monitoring system to measure and record the hourly average concentration of TRS for each exhaust stack; this monitor must include an oxygen monitor for correcting the data for excess oxygen; or ii. Continuous parameter monitoring systems to measure and record the combustion zone temperature of each thermal incinerator and the oxygen content (percent, dry basis) in the vent stream of the incinerator.

[67 FR 17773, Apr. 11, 2002, as amended at 70 FR 6942 and 6961, Feb. 9, 2005]

TABLE 32 TO SUBPART UUU OF PART 63—REQUIREMENTS FOR PERFORMANCE TESTS FOR HAP EMISSIONS FROM SULFUR RECOVERY UNITS NOT SUBJECT TO THE NEW SOURCE PERFORMANCE STANDARDS FOR SULFUR OXIDES

As stated in §63.1568(b)(2) and (3), you shall meet each requirement in the following table that applies to you.

For . . .	You must . . .	Using . . .	According to these requirements . .
1. Each new and existing sulfur recovery unit: Option 1 (Elect NSPS).	Measure SO_2 concentration (for an oxidation or reduction system followed by incineration) or the concentration of reduced sulfur (or SO_2 if you use an instrument to convert the reduced sulfur to SO_2) for a reduction control system without incineration.	Data from continuous emission monitoring system.	Collect SO_2 monitoring data every 15 minutes for 24 consecutive operating hours. Reduce the data to 1-hour averages computed from four or more data points equally spaced over each 1-hour period.
2. Each new and existing sulfur recovery unit: Option 2 (TRS limit).	a. Select sampling port's location and the number of traverse ports.	Method 1 or 1A appendix A to part 60 of this chapter.	Sampling sites must be located at the outlet of the control device and prior to any releases to the atmosphere.
	b. Determine velocity and volumetric flow rate.	Method 2, 2A, 2C, 2D, 2F, or 2G in appendix A to part 60 of this chapter, as applicable.	
	c Conduct gas molecular weight analysis; obtain the oxygen concentration needed to correct the emission rate for excess air.	Method 3; 3A, or 3B in appendix A to part 60 of this chapter, as applicable.	Take the samples simultaneously with reduced sulfur or moisture samples.
	d. Measure moisture content of the stack gas.	Method 4 in appendix A to part 60 of this chapter.	Make your sampling time for each Method 4 sample equal to that for 4 Method 15 samples.

For . . .	You must . . .	Using . . .	According to these requirements . .
	e. Measure the concentration of TRS.	Method 15 or 15A in appendix A to part 60 of this chapter, as applicable.	If the cross-sectional area of the duct is less than 5 square meters (m^2) or 54 square feet, you must use the centroid of the cross section as the sampling point. If the cross-sectional area is 5 m^2 or more and the centroid is more than 1 meter (m) from the wall, your sampling point may be at a point no closer to the walls than 1 m or 39 inches. Your sampling rate must be at least 3 liters per minute or 0.10 cubic feet per minute to ensure minimum residence time for the sample inside the sample lines.
	f. Calculate the SO_2 equivalent for each run after correcting for moisture and oxygen.	The arithmetic average of the SO_2 equivalent for each sample during the run.	
	g. Correct the reduced sulfur samples to zero percent excess air.sa	Equation 1 of §63.1568.	
	h. Establish each operating limit in Table 30 of this subpart that applies to you.	Data from the continuous parameter monitoring system.	
	i. Measure thermal incinerator: combustion zone temperature.	Data from the continuous parameter monitoring system.	Collect temperature monitoring data every 15 minutes during the entire period of the performance test; and determine and record the minimum hourly average temperature from all the readings.
	j. Measure thermal incinerator: oxygen concentration (percent, dry basis) in the vent stream.	Data from the continuous parameter monitoring system.	Collect oxygen concentration (percent, dry basis) data every 15 minutes during the entire period of the performance test; and determine and record the minimum hourly average percent excess oxygen concentration.
	k. If you use a continuous emission monitoring system, measure TRS concentration.	Data from continuous emission monitoring system.	Collect TRS data every 15 minutes for 24 consecutive operating hours. Reduce the data to 1-hour averages computed from four or more data points equally spaced over each 1-hour period.

[67 FR 17773, Apr. 11, 2002, as amended at 70 FR 6942, Feb. 9, 2005]

TABLE 33 TO SUBPART UUU OF PART 63—INITIAL COMPLIANCE WITH HAP EMISSION LIMITS FOR SULFUR RECOVERY UNITS

As stated in §63.1568(b)(5), you shall meet each requirement in the following table that applies to you.

TABLE 33 TO SUBPART UUU OF PART 63.—INITIAL COMPLIANCE WITH HAP EMISSION LIMITS FOR SULFUR RECOVERY UNITS

[As stated in §63.1568(b)(5), you shall meet each requirement in the following table that applies to you.]

For . . .	For the following emission limit . . .	You have demonstrated initial compliance if . . .
1. Each new or existing Claus sulfur recovery unit part of a sulfur recovery plant of 20 long tons per day or more and subject to the NSPS for sulfur oxides in 40 CFR 60.104(a)(2).	a. 250 ppmv (dry basis) SO_2 at zero percent excess air if you use an oxidation or reduction control system followed by incineration.	You have already conducted a performance test to demonstrate initial compliance with the NSPS and each 12-hour rolling average concentration of SO_2 emissions measured by the continuous emission monitoring system is less than or equal to 250 ppmv (dry basis) at zero percent excess air. As part of the Notification of Compliance Status, you must certify that your vent meets the SO_2 limit. You are not required to do another performance test to demonstrate initial compliance. You have already conducted a performance evaluation to demonstrate initial compliance with the applicable performance specification. As part of your Notification of Compliance Status, you must certify that your continuous emission monitoring system meets the applicable requirements in §63.1572. You are not required to do another performance evaluation to demonstrate initial compliance.
	b. 300 ppmv of reduced sulfur compounds calculated as ppmv SO_2 (dry basis) at zero percent excess air if you use a reduction control system without incineration.	You have already conducted a performance test to demonstrate initial compliance with the NSPS and each 12-hour rolling average concentration of reduced sulfur compounds measured by your continuous emission monitoring system is less than or equal to 300 ppmv, calculated as ppmv SO_2 (dry basis) at zero percent excess air. As part of the Notification of Compliance Status, you must certify that your vent meets the SO_2 limit. You are not required to do another performance test to demonstrate initial compliance. You have already conducted a performance evaluation to demonstrate initial compliance with the applicable performance specification. As part of your Notification of Compliance Status, you must certify that your continuous emission monitoring system meets the applicable requirements in §63.1572. You are not required to do another performance evaluation to demonstrate initial compliance.
2. Option 1: Elect NSPS. Each new or existing sulfur recovery unit (Claus or other type, regardless of size) not subject to the NSPS for sulfur oxides in 40 CFR 60.104(a)(2).	a. 250 ppmv (dry basis) of SO_2 at zero percent excess air if you use an oxidation or reduction control system followed by incineration.	Each 12-hour rolling average concentration of SO_2 emissions measured by the continuous emission monitoring system during the initial performance test is less than or equal to 250 ppmv (dry basis) at zero percent excess air; and your performance evaluation shows the monitoring system meets the applicable requirements in §63.1572.

TABLE 33 TO SUBPART UUU OF PART 63.—INITIAL COMPLIANCE WITH HAP EMISSION LIMITS FOR SULFUR RECOVERY UNITS—Continued

[As stated in §63.1568(b)(5), you shall meet each requirement in the following table that applies to you.]

For .	For the following emission limit . . .	You have demonstrated initial compliance if .
	b. 300 ppmv of reduced sulfur compounds calculated as ppmv SO_2 (dry basis) at zero percent excess air if you use a reduction control system without incineration.	Each 12-hour rolling average concentration of reduced sulfur compounds measured by the continuous emission monitoring system during the initial performance test is less than or equal to 300 ppmv, calculated as ppmv SO_2 (dry basis) at zero percent excess air; and your performance evaluation shows the continuous emission monitoring system meets the applicable requirements in §63.1572.
3. Option 2: TRS limit. Each new or existing sulfur recovery unit (Claus or other type, regardless of size) not subject to the NSPS for sulfur oxides in 40 CFR 60.104(a)(2).	300 ppmv of TRS compounds expressed as an equivalent SO_2 concentration (dry basis) at zero percent oxygen.	If you use continuous parameter monitoring systems, the average concentration of TRS emissions measured using Method 15 during the initial performance test is less than or equal to 300 ppmv expressed as equivalent SO_2 concentration (dry basis) at zero percent oxygen. If you use a continuous emission monitoring system, each 12-hour rolling average concentration of TRS emissions measured by the continuous emission monitoring system during the initial performance test is less than or equal to 300 ppmv expressed as an equivalent SO_2 (dry basis) at zero percent oxygen; and your performance evaluation shows the continuous emission monitoring system meets the applicable requirements in §63.1572.

[70 FR 6962, Feb. 9, 2005]

TABLE 34 TO SUBPART UUU OF PART 63—CONTINUOUS COMPLIANCE WITH HAP EMISSION LIMITS FOR SULFUR RECOVERY UNITS

As stated in §63.1568(c)(1), you shall meet each requirement in the following table that applies to you.

TABLE 34 TO SUBPART UUU OF PART 63.—CONTINUOUS COMPLIANCE WITH HAP EMISSION LIMITS FOR SULFUR RECOVERY UNITS

[As stated in §63.1568(c)(1), you shall meet each requirement in the following table that applies to you.]

For . .	For this emission limit . .	You shall demonstrate continuous compliance by
1. Each new or existing Claus sulfur recovery unit part of a sulfur recovery plant of 20 long tons per day or more and subject to the NSPS for sulfur oxides in 40 CFR 60.104(a)(2).	a. 250 ppmv (dry basis) of SO_2 at zero percent excess air if you use an oxidation or reduction control system followed by incineration.	Collecting the hourly average SO_2 monitoring data (dry basis, percent excess air) according to §63.1572; determining and recording each 12-hour rolling average concentration of SO_2; maintaining each 12-hour rolling average concentration of SO_2 at or below the applicable emission limitation; and reporting any 12-hour rolling average concentration of SO_2 greater than the applicable emission limitation in the compliance report required by §63 1575.

TABLE 34 TO SUBPART UUU OF PART 63.—CONTINUOUS COMPLIANCE WITH HAP EMISSION LIMITS FOR SULFUR RECOVERY UNITS—Continued

[As stated in § 63.1568(c)(1), you shall meet each requirement in the following table that applies to you.]

For . . .	For this emission limit . .	You shall demonstrate continuous compliance by . .
	b. 300 ppmv of reduced sulfur compounds calculated as ppmv SO_2 (dry basis) at zero percent excess air if you use a reduction control system without incineration.	Collecting the hourly average reduced sulfur (and air or O_2 dilution and oxidation) monitoring data according to § 63.1572; determining and recording each 12-hour rolling average concentration of reduced sulfur; maintaining each 12-hour rolling average concentration of reduced sulfur at or below the applicable emission limitation; and reporting any 12-hour rolling average concentration of reduced sulfur greater than the applicable emission limitation in the compliance report required by § 63.1575.
2. Option 1: Elect NSPS. Each new or existing sulfur recovery unit (Claus or other type, regardless of size) not subject to the NSPS for sulfur oxides in 40 CFR 60.104(a)(2).	a. 250 ppmv (dry basis) of SO_2 at zero percent excess air if you use an oxidation or reduction control system followed by incineration.	Collecting the hourly average SO_2 data (dry basis, percent excess air) according to § 63.1572; determining and recording each 12-hour rolling average concentration of SO_2; maintaining each 12-hour rolling average concentration of SO_2 at or below the applicable emission limitation; and reporting any 12-hour rolling average concentration of SO_2 greater than the applicable emission limitation in the compliance report required by § 63.1575.
	b. 300 ppmv of reduced sulfur compounds calculated as ppmv SO_2 (dry basis) at zero percent excess air if you use a reduction control system without incineration.	Collecting the hourly average reduced sulfur (and air or O_2 dilution and oxidation) monitoring data according to § 63.1572; determining and recording each 12-hour rolling average concentration of reduced sulfur; maintaining each 12-hour rolling average concentration of reduced sulfur at or below the applicable emission limitation; and reporting any 12-hour rolling average concentration of reduced sulfur greater than the applicable emission limitation in the compliance report required by § 63.1575.
3. Option 2: TRS limit. Each new or existing sulfur recovery unit (Claus or other type, regardless of size) not subject to the NSPS for sulfur oxides in 40 CFR 60.104(a)(2).	300 ppmv of TRS compounds, expressed as an SO_2 concentration (dry basis) at zero percent oxygen or reduced sulfur compounds calculated as ppmv SO_2 (dry basis) at zero percent excess air.	i. If you use continuous parameter monitoring systems, collecting the hourly average TRS monitoring data according to § 63.1572 and maintaining each 12-hour average concentration of TRS at or below the applicable emission limitation; or
		ii. If you use a continuous emission monitoring system, collecting the hourly average TRS monitoring data according to § 63.1572, determining and recording each 12-hour rolling average concentration of TRS; maintaining each 12-hour rolling average concentration of TRS at or below the applicable emission limitation; and reporting any 12-hour rolling average TRS concentration greater than the applicable emission limitation in the compliance report required by § 63.1575.

[70 FR 6963, Feb. 9, 2005]

TABLE 35 TO SUBPART UUU OF PART 63—CONTINUOUS COMPLIANCE WITH OPERATING LIMITS FOR HAP EMISSIONS FROM SULFUR RECOVERY UNITS

As stated in § 63.1568(c)(1), you shall meet each requirement in the following table that applies to you.

For . .	For this operating limit . . .	You shall demonstrate continuous compliance by . .
1. Each new or existing Claus sulfur recovery unit part of a sulfur recovery plant of 20 long tons per day or more and subject to the NSPS for sulfur oxides in paragraph 40 CFR 60.104(a)(2).	Not applicable	Meeting the requirements of Table 34 of this subpart.
2. Option 1: Elect NSPS Each new or existing sulfur recovery unit (Claus or other type, regardless of size) not subject to the NSPS for sulfur oxides in 40 CFR 60.104(a)(2).	Not applicable	Meeting the requirements of Table 34 of this subpart.
3. Option 2: TRS limit Each new or existing sulfur recovery unit (Claus or other type, regardless of size) not subject to the NSPS for sulfur oxides in 40 CFR 60.104(a)(2)	a. Maintain the daily average combustion zone temperature above the level established during the performance test.	Collecting the hourly and daily average temperature monitoring data according to §63.1572; and maintaining the daily average combustion zone temperature at or above the limit established during the performance test.
	b. The daily average oxygen concentration in the vent stream (percent, dry basis) must not fall below the level established during the performance test.	Collecting the hourly and daily average O_2 monitoring data according to §63.1572; and maintaining the average O_2 concentration above the level established during the performance test.

[67 FR 17773, Apr. 11, 2002, as amended at 70 FR 6942, Feb. 9, 2005]

TABLE 36 TO SUBPART UUU OF PART 63—WORK PRACTICE STANDARDS FOR HAP EMISSIONS FROM BYPASS LINES

As stated in §63.1569(a)(1), you shall meet each work practice standard in the following table that applies to you.

Option	You shall meet one of these equipment standards . .
1. Option 1	Install and operate a device (including a flow indicator, level recorder, or electronic valve position monitor) to demonstrate, either continuously or at least every hour, whether flow is present in the by bypass line. Install the device at or as near as practical to the entrance to any bypass line that could divert the vent stream away from the control device to the atmosphere
2. Option 2	Install a car-seal or lock-and-key device placed on the mechanism by which the bypass device flow position is controlled (e.g., valve handle, damper level) when the bypass device is in the closed position such that the bypass line valve cannot be opened without breaking the seal or removing the device.
3. Option 3	Seal the bypass line by installing a solid blind between piping flanges.
4. Option 4	Vent the bypass line to a control device that meets the appropriate requirements in this subpart.

[67 FR 17773, Apr. 11, 2002, as amended at 70 FR 6942 and 6964, Feb. 9, 2005]

TABLE 37 TO SUBPART UUU OF PART 63—REQUIREMENTS FOR PERFORMANCE TESTS FOR BYPASS LINES

As stated in §63.1569(b)(1), you shall meet each requirement in the following table that applies to you.

For this standard .	You shall
1. Option 1: Install and operate a flow indicator, level recorder, or electronic valve position monitor.	Record during the performance test for each type of control device whether the flow indicator, level recorder, or electronic valve position monitor was operating and whether flow was detected at any time during each hour of level the three runs comprising the performance test.

[67 FR 17773, Apr. 11, 2002, as amended at 70 FR 6942, Feb. 9, 2005]

TABLE 38 TO SUBPART UUU OF PART 63—INITIAL COMPLIANCE WITH WORK PRACTICE STANDARDS FOR HAP EMISSIONS FROM BYPASS LINES

As stated in §63.1569(b)(2), you shall meet each requirement in the following table that applies to you.

TABLE 38 TO SUBPART UUU OF PART 63.—INITIAL COMPLIANCE WITH WORK PRACTICE STANDARDS FOR HAP EMISSIONS FROM BYPASS LINES

[As stated in § 63.1569(b)(2), you shall meet each requirement in the following table that applies to you.]

Option	For this work practice standard . . .	You have demonstrated initial compliance if . . .
1. Each new or existing bypass line associated with a catalytic cracking unit, catalytic reforming unit, or sulfur recovery unit.	a. Option 1: Install and operate a device (including a flow indicator, level recorder, or electronic valve position monitor) to demonstrate, either continuously or at least every hour, whether flow is present in bypass line. Install the device at or as near as practical to the entrance to any bypass line that could divert the vent stream away from the control device to the atmosphere.	The installed equipment operates properly during each run of the performance test and no flow is present in the line during the test.
	b. Option 2: Install a car-seal or lock-and-key device placed on the mechanism by which the bypass device flow position is controlled (e.g., valve handle, damper level) when the bypass device is in the closed position such that the bypass line valve cannot be opened without breaking the seal or removing the device.	As part of the notification of compliance status, you certify that you installed the equipment, the equipment was operational by your compliance date, and you identify what equipment was installed.
	c. Option 3: Seal the bypass line by installing a solid blind between piping flanges.	See item 1.b of this table.
	d. Option 4: Vent the bypass line to a control device that meets the appropriate requirements in this subpart.	See item 1.b of this table.

[70 FR 6965, Feb. 9, 2005]

TABLE 39 TO SUBPART UUU OF PART 63—CONTINUOUS COMPLIANCE WITH WORK PRACTICE STANDARDS FOR HAP EMISSIONS FROM BYPASS LINES

As stated in § 63.1569(c)(1), you shall meet each requirement in the following table that applies to you.

If you elect this standard . . .	You shall demonstrate continuous compliance by . . .
1. Option 1: Flow indicator, level recorder, or electronic valve position monitor.	Monitoring and recording on a continuous basis or at least every hour whether flow is present in the bypass line; visually inspecting the device at least once every hour if the device is not equipped with a recording system that provides a continuous record; and recording whether the device is operating properly and whether flow is present in the bypass line.
2. Option 2: Car-seal or lock-and-key device	Visually inspecting the seal or closure mechanism at least once every month; and recording whether the bypass line valve is maintained in the closed position and whether flow is present in the line.
3. Option 3: Solid blind flange	Visually inspecting the blind at least once a month; and recording whether the blind is maintained in the correct position such that the vent stream cannot be diverted through the bypass line.
4. Option 4: Vent to control device	Monitoring the control device according to appropriate subpart requirements.
5. Option 1, 2, 3, or 4	Recording and reporting the time and duration of any bypass.

[67 FR 17773, Apr. 11, 2002, as amended at 70 FR 6942 and 6965, Feb. 9, 2005]

TABLE 40 TO SUBPART UUU OF PART 63—REQUIREMENTS FOR INSTALLATION, OPERATION, AND MAINTENANCE OF CONTINUOUS OPACITY MONITORING SYSTEMS AND CONTINUOUS EMISSION MONITORING SYSTEMS

As stated in § 63.1572(a)(1) and (b)(1), you shall meet each requirement in the following table that applies to you.

This type of continuous opacity or emission monitoring system	Must meet these requirements
1 Continuous opacity monitoring system	Performance specification 1 (40 CFR part 60, appendix B).

This type of continuous opacity or emission monitoring system . .	Must meet these requirements . .
2. CO continuous emission monitoring system	Performance specification 4 (40 CFR part 60, appendix B); span value of 1,000 ppm; and procedure 1 (40 CFR part 60, appendix F) except relative accuracy test audits are required annually instead of quarterly.
3. CO continuous emission monitoring system used to demonstrate emissions average under 50 ppm (dry basis).	Performance specification 4 (40 CFR part 60, appendix B); and span value of 100 ppm.
4. SO_2 continuous emission monitoring system for sulfur recovery unit with oxidation control system or reduction control system; this monitor must include an O_2 monitor for correcting the data for excess air.	Performance specification 2 (40 CFR part 60, appendix B); span value of 500 ppm SO_2; use Methods 6 or 6C and 3A or 3B (40 CFR part 60, appendix A) for certifying O_2 monitor; and procedure 1 (40 CFR part 60, appendix F) except relative accuracy test audits are required annually instead of quarterly.
5. Reduced sulfur and O_2 continuous emission monitoring system for sulfur recovery unit with reduction control system not followed by incineration; this monitor must include an O_2 monitor for correcting the data for excess air unless exempted.	Performance specification 5 (40 CFR part 60, appendix B), except calibration drift specification is 2.5 percent of the span value instead of 5 percent; 450 ppm reduced sulfur; use Methods 15 or 15A and 3A or 3B (40 CFR part 60, appendix A) for certifying O_2monitor; if Method 3A or 3B yields O_2 concentrations below 0.25 percent during the performance evaluation, the O_2 concentration can be assumed to be zero and the O_2 monitor is not required; and procedure 1 (40 CFR part 60, appendix F), except relative accuracy test audits, are required annually instead of quarterly.
6. Instrument with an air or O_2 dilution and oxidation system to convert reduced sulfur to SO_2 for continuously monitoring the concentration of SO_2 instead of reduced sulfur monitor and O_2 monitor.	Performance specification 5 (40 CFR part 60, appendix B); span value of 375 ppm SO_2; use Methods 15 or 15A and 3A or 3B for certifying O_2 monitor; and procedure 1 (40 CFR part 60, appendix F), except relative accuracy test audits, are required annually instead of quarterly.
7. TRS continuous emission monitoring system for sulfur recovery unit; this monitor must include an O_2 monitor for correcting the data for excess air.	Performance specification 5 (40 CFR part 60, appendix B).
8. O_2 monitor for oxygen concentration.	If necessary due to interferences, locate the oxygen sensor prior to the introduction of any outside gas stream; performance specification 3 (40 CFR part 60, appendix B; and procedure 1 (40 CFR part 60, appendix F), except relative accuracy test audits, are required annually instead of quarterly.

[67 FR 17773, Apr. 11, 2002, as amended at 70 FR 6942 and 6965, Feb. 9, 2005]

TABLE 41 TO SUBPART UUU OF PART 63—REQUIREMENTS FOR INSTALLATION, OPERATION, AND MAINTENANCE OF CONTINUOUS PARAMETER MONITORING SYSTEMS

As stated in §63.1572(c)(1), you shall meet each requirement in the following table that applies to you.

If you use . .	You shall .
1. pH strips	Use pH strips with an accuracy of ± 10 percent.
2. Colormetric tube sampling system.	Use a colormetric tube sampling system with a printed numerical scale in ppmv, a standard measurement range of 1 to 10 ppmv (or 1 to 30 ppmv if applicable), and a standard deviation for measured values of no more than ± 15 percent. System must include a gas detection pump and hot air probe if needed for the measurement range.

[70 FR 6966, Feb. 9, 2005]

TABLE 42 TO SUBPART UUU OF PART 63—ADDITIONAL INFORMATION FOR INITIAL NOTIFICATION OF COMPLIANCE STATUS

As stated in §63.1574(d), you shall meet each requirement in the following table that applies to you.

For . . .	You shall provide this additional information . . .
1. Identification of affected sources and emission points.	Nature, size, design, method of operation, operating design capacity of each affected source; identify each emission point for each HAP; identify any affected source or vent associated with an affected source not subject to the requirements of subpart UUU.
2. Initial compliance	Identification of each emission limitation you will meet for each affected source, including any option you select (i.e., NSPS, PM or NI, flare, percent reduction, concentration, options for bypass lines); if applicable, certification that you have already conducted a performance test to demonstrate initial compliance with the NSPS for an affected source; certification that the vents meet the applicable emission limit and the continuous opacity or that the emission monitoring system meets the applicable performance specification; if applicable, certification that you have installed and verified the operational status of equipment by your compliance date for each bypass line that meets the requirements of Option 2, 3, or 4 in §63.1569 and what equipment you installed; identification of the operating limit for each affected source, including supporting documentation; if your affected source is subject to the NSPS, certification of compliance with NSPS emission limitations and performance specifications; a brief description of performance test conditions (capacity, feed quality, catalyst, etc.); an engineering assessment (if applicable); and if applicable, the flare design (e.g., steam-assisted, air-assisted, or non-assisted), all visible emission readings, heat content determinations, flow rate measurements, and exit velocity determinations made during the Method 22 test.
3. Continuous compliance	Each monitoring option you elect; and identification of any unit or vent for which monitoring is not required; and the definition of "operating day." (This definition, subject to approval by the applicable permitting authority, must specify the times at which a 24-hr operating day begins and ends.)

[67 FR 17773, Apr. 11, 2002, as amended at 70 FR 6942, Feb. 9, 2005]

TABLE 43 TO SUBPART UUU OF PART 63—REQUIREMENTS FOR REPORTS

As stated in §63.1575(a), you shall meet each requirement in the following table that applies to you.

You must submit a(n) . . .	The report must contain . . .	You shall submit the report . . .
1. Compliance report	If there are not deviations from any emission limitation or work practice standard that applies to you, a statement that there were no deviations from the standards during the reporting period and that no continuous opacity monitoring system or continuous emission monitoring system was inoperative, inactive, out-of-control, repaired, or adjusted; and if you have a deviation from any emission limitation or work practice standard during the reporting period, the report must contain the information in §63.1575(d) or (e)	Semiannually according to the requirements in §63.1575(b).

[67 FR 17773, Apr. 11, 2002, as amended at 70 FR 6942, Feb. 9, 2005]

TABLE 44 TO SUBPART UUU OF PART 63—APPLICABILITY OF NESHAP GENERAL PROVISIONS TO SUBPART UUU

As stated in §63.1577, you shall meet each requirement in the following table that applies to you.

Citation	Subject	Applies to supbart UUU	Explanation
§63.1	Applicability	Yes	Except that subpart UUU specifies calendar or operating day.
§63.2	Definitions	Yes.	
§63.3	Units and Abbreviations	Yes.	
§63.4	Prohibited Activities	Yes.	
§63.5(A)–(C)	Construction and Reconstruction.	Yes	In §63.5(b)(4), replace the reference to §63.9 with §63.9(b)(4) and (5).
§63.5(d)(1)(i)	Application for Approval of Construction or Reconstruction—General Application Requirements.	Yes	Except, subpart UUU specifies the application is submitted as soon as practicable before startup but not later than 90 days (rather then 60) after the promulgation date where construction or reconstruction had commenced and initial startup had not occurred before promulgation.

Citation	Subject	Applies to supbart UUU	Explanation
§ 63.5(d)(1)(ii)		Yes	Except that emission estimates specified in § 63.5(d)(1)(ii)(H) are not required.
§ 63.5(d)(1)(iii)		No	Subpart UUU specifies submission of notification of compliance status.
§ 63.5(d)(2)		No.	
§ 63.5(d)(3)		Yes	Except that § 63.5(d)(3)(ii) does not apply.
§ 63.5(d0(4)		Yes.	
§ 63.5(e)	Approval of Construction or Reconstruction.	Yes.	
§ 63.5(f)(1)	Approval of Construction or Reconstruction Based on State Review.		
§ 63.5(f)(2)		Yes	Except that 60 days is changed to 90 days and cross-reference to 53.9(B)(2) does not apply.
§ 63.6(a)	Compliance with Standards and Maintenance—Applicability.	Yes.	
§ 63.6(b)(1)–(4)	Compliance Dates for New and Reconstructed Sources.	Yes.	
§ 63.6(b)(5)		Yes	Except that subpart UUU specifies different compliance dates for sources.
§ 63.6(b)(6)	[Reserved]	Not applicable.	
§ 63.6(b)(7)	Compliance Dates for New and Reconstructed Area Sources That Become Major.	Yes.	
§ 63.6(c)(1)–(2)	Compliance Dates for Existing Sources.	Yes	Except that subpart UUU specifies different compliance dates for sources subject to Tier II gasoline sulfur control requirements.
§ 63.6(c)(3)–(4)	[Reserved]	Not applicable.	
§ 63.6(c)(5)	Compliance Dates for Existing Area Sources That Become Major.	Yes.	
§ 63.6(d)	[Reserved]	Not applicable.	
§ 63.6(e)(1)–(2)	Operation and Maintenance Requirements.	Yes.	
§ 63.6(e)(3)(i)–(iii)	Startup, Shutdown, and Malfunction Plan.	Yes.	
§ 63.6(e)(3)(iv)		Yes	Except that reports of actions not consistent with plan are not required within 2 and 7 days of action but rather must be included in next periodic report.
§ 63.6(e)(3)(v)–(viii)		Yes	The owner or operator is only required to keep the latest version of the plan.
§ 63.6(f)(1)–(2)(iii)(C)	Compliance with Emission Standards.	Yes.	
§ 63.6(f)(2)(iii)(D)		No.	
§ 63.6(f)(2)(iv)–(v)		Yes.	
§ 63.6(f)(3)		Yes.	
§ 63.6(g)	Alternative Standard	Yes.	
§ 63.6(h)	Opacity/VE Standards	Yes.	
§ 63.6(h)(2)(i)	Determining Compliance with Opacity/VE Standards.	No	Subpart UUU specifies methods.
§ 63.6(h)(2)(ii)	[Reserved]	Not applicable.	
§ 63.6(h)(2)(iii)		Yes.	
§ 63.6(h)(3)	[Reserved]	Not applicable.	
§ 63.6(h)(4)	Notification of Opacity/VE Observation Date.	Yes	Applies to Method 22 tests.
§ 63.6(h)(5)	Conducting Opacity/VE Observations.	No.	
§ 63.6(h)(6)	Records of Conditions During Opacity/VE Observations.	Yes	Applies to Method 22 observations.
§ 63.6(h)(7)(i)	Report COM Monitoring Data from Performance Test.	Yes.	
§ 63.6(h)(7)(ii)	Using COM Instead of Method 9.	No.	

Citation	Subject	Applies to supbart UUU	Explanation
§ 63.6(h)(7)(iii)	Averaging Time for COM during Performance Test.	Yes.	
§ 63.6(h)(7)(iv)	COM Requirements	Yes.	
§ 63.6(h)(8)	Determining Compliance with Opacity/VE Standards.	Yes.	
§ 63.6(h)(9)	Adjusted Opacity Standard.	Yes.	
§ 63.6(i)(1)–(14)	Extension of Compliance.	Yes	Extension of compliance under § 63.6(i)(4) not applicable to a facility that installs catalytic cracking feed hydrotreating and receives an extended compliance date under § 63.1563(c).
§ 63.6(i)(15)	[Reserved]	Not applicable.	
§ 63.6(i)(16)		Yes.	
§ 63.6(j)	Presidential Compliance Exemption.	Yes.	
§ 63.7(a)(1)	Performance Test Requirements Applicability.	Yes	Except that subpart UUU specifies the applicable test and demonstration procedures.
§ 63.7(a)(2)	Performance Test Dates.	No	Test results must be submitted in the Notification of Compliance Status report due 150 days after the compliance date.
§ 63.7(a)(3)	Section 114 Authority	Yes.	
§ 63.7(b)	Notifications	Yes	Except that subpart UUU specifies notification at least 30 days prior to the scheduled test date rather than 60 days.
§ 63.7(c)	Quality Assurance Program/Site-Specific Test Plan.	Yes.	
§ 63.7(d)	Performance Test Facilities.	Yes.	
§ 63.7(e)	Conduct of Tests	Yes.	
§ 63.7(f)	Alternative Test Method	Yes.	
§ 63.7(g)	Data Analysis, Recordkeeping, Reporting.	Yes	Except performance test reports must be submitted with notification of compliance status due 150 days after the compliance date.
§ 63.7(h)	Waiver of Tests	Yes.	
§ 63.8(a)(1)	Monitoring Requirements-Applicability.	Yes.	
§ 63.8(a)(2)	Performance Specifications.	Yes.	
§ 63.8(a)(3)	[Reserved]	Not applicable.	
§ 63.8(a)(4)	Monitoring with Flares	Yes.	
§ 63.8(b)(1)	Conduct of Monitoring	Yes.	
§ 63.8(b)(2)–(3)	Multiple Effluents and Multiple Monitoring Systems.	Yes	Subpart UUU specifies the required monitoring locations.
§ 63.8(c)(1)	Monitoring System Operation and Maintenance.	Yes.	
§ 63.8(c)(1)(i)–(ii)	Startup, Shutdown, and Malfunctions.	Yes	Except that subpart UUU specifies that reports are not required if actions are consistent with the SSM plan, unless requested by the permitting authority. If actions are not consistent, actions must be described in next compliance report.
§ 63.8(c)(1)(iii)	Compliance with Operation and Maintenance Requirements.	Yes.	
§ 63.8(c)(2)–(3)	Monitoring System Installation.	Yes	Except that subpart UUU specifies that for continuous parameter monitoring systems, operational status verification includes completion of manufacturer written specifications or installation, operation, and calibration of the system or other written procedures that provide adequate assurance that the equipment will monitor accurately.
§ 63.8(c)(4)	Continuous Monitoring System Requirements.	No	Subpart UUU specifies operational requirements.

Citation	Subject	Applies to subpart UUU	Explanation
§63.8(c)(4)(i)–(ii)	Continuous Monitoring System Requirements.	Yes	Except that these requirements apply only to a continuous opacity monitoring system or a continuous emission monitoring system if you are subject to the NSPS or elect to comply with the NSPS opacity, CO, or SO_2 limits.
§63.8(c)(5)	COM Minimum Procedures.	Yes.	
§63.8(c)(6)	CMS Requirements	No	Except that these requirements apply only to a continuous opacity monitoring system or continuous emission monitoring system if you are subject to the NSPS or elect to comply with the NSPS opacity, CO, or SO_2 limits.
§63.8(c)(7)–(8)	CMS Requirements	Yes.	
§63.8(d)	Quality Control Program	Yes	Except that these requirements apply only to a continuous opacity monitoring system or continuous emission monitoring system if you are subject to the NSPS or elect to comply with the NSPS opacity, CO, or SO_2 limits
§63.8(e)	CMS Performance Evaluation.	Yes	Except that these requirements apply only to a continuous opacity monitoring system or continuous emission monitoring system if you are subject to the NSPS or elect to comply with the NSPS opacity, CO, or SO_2 limits. Results are to be submitted as part of the Notification Compliance Status due 150 days after the compliance date.
§63.8(f)(1)–(5)	Alternative Monitoring Methods.	Yes	Except that subpart UUU specifies procedures for requesting alternative monitoring systems and alternative parameters.
§63.8(f)(6)	Alternative to Relative Accuracy Test	Yes	Applicable to continuous emission monitoring systems if performance specification requires a relative accuracy test audit.
§63.8(g)(1)–(4)	Reduction of Monitoring Data.	Yes	Applies to continuous opacity monitoring system or continuous emission monitoring system.
§63.8(g)(5)	Data Reduction	No	Subpart UUU specifies requirements.
§63.9(a)	Notification Requirements—Applicability.	Yes	Duplicate Notification of Compliance Status report to the Regional Administrator may be required.
§63.9(b)(1)–(2), (4)–(5)	Initial Notifications	Yes	Except that notification of construction or reconstruction is to be submitted as soon as practicable before startup but no later than 30 days (rather than 60 days) after the effective date if construction or reconstruction had commenced but startup had not occurred before the effective date.
§63.9(b)(3)	[Reserved].		
§63.9(c)	Request for Extension of Compliance.	Yes.	
§63.9(d)	New Source Notification for Special Compliance Requirements.	Yes.	
§63.9(e)	Notification of Performance Test.	Yes	Except that notification is required at least 30 days before test
§63.9(f)	Notification of VE/Opacity Test.	Yes.	
§63.9(g)	Additional Notification Requirements for Sources with Continuous Monitoring Systems.	Yes	Except that these requirements apply only to a continuous opacity monitoring system or continuous emission monitoring system if you are subject to the NSPS or elect to comply with the NSPS opacity, CO, or SO_2 limits.
§63.9(h)	Notification of Compliance Status.	Yes	Except that subpart UUU specifies the notification is due no later than 150 days after compliance date.
§63.9(i)	Adjustment of Deadlines.	Yes.	
§63.9(j)	Change in Previous Information.	Yes.	
63.10(a)	Recordkeeping and Reporting Applicability.	Yes.	

Citation	Subject	Applies to supbart UUU	Explanation
§ 63.10(b)	Records	Yes	Except that § 63.10(b)(2)(xiii) applies if you use a continuous emission monitoring system to meet the NSPS or you select to meet the NSPS, CO, or SO_2 reduced sulfur limit and the performance evaluation requires a relative accuracy test audit.
§ 63.10(c)(1)–(6), (9)–(15).	Additional Records for Continuous Monitoring Systems.	Yes	Except that these requirements apply if you use a continuous opacity monitoring system or a continuous emission monitoring system to meet the NSPS or elect to meet the NSPS opacity, CO, or SO_2 limits.
§ 63.10(c)(7)–(8)	Records of Excess Emissions and Exceedances.	No	Subpart UUU specifies requirements.
§ 63.10(d)(1)	General Reporting Requirements.	Yes.	
§ 63.10(d)(2)	Performance Test Results.	No	Subpart UUU requires performance test results to be reported as part of the Notification of Compliance Status due 150 days after the compliance date.
§ 63.10(d)(3)	Opacity or VE Observations.	Yes.	
§ 63.10(d)(4)	Progress Reports	Yes.	
§ 63.10(d)(5)(i)	Startup, Shutdown, and Malfunction Reports.	Yes	Except that reports are not required if actions are consistent with the SSM plan, unless requested by permitting authority.
§ 63.10(d)(5)(ii)		Yes	Except that actions taken during a startup, shutdown, or malfunction that are not consistent with the plan do not need to be reported within 2 and 7 days of commencing and completing the action, respectively, but must be included in the next periodic report.
§ 63.10(e)(1)–(2)	Additional CMS Reports	Yes	Except that these requirements apply only to a continuous opacity monitoring system or continuous emission monitoring system if you are subject to the NSPS or elect to comply with the NSPS opacity, CO, or SO_2 limits. Reports of performance evaluations must be submitted in Notification of Compliance Status.
§ 63.10(e)(3)	Excess Emissions/CMS Performance Reports.	No	Subpart UUU specifies the applicable requirements.
§ 63.10(e)(4)	COMS Data Reports	Yes.	
§ 63.10(f)	Recordkeeping/Reporting Waiver.	Yes.	
§ 63.11	Control Device Requirements.	Yes	Applicable to flares.
§ 63.13	Addresses	Yes.	
§ 63.14	Incorporation by Reference.	Yes.	
§ 63.15	Available of Information	Yes.	

[70 FR 6966, Feb. 9, 2005]

APPENDIX A TO SUBPART UUU OF PART 63—DETERMINATION OF METAL CONCENTRATION ON CATALYST PARTICLES (INSTRUMENTAL ANALYZER PROCEDURE)

1.0 Scope and Application.

1.1 Analytes. The analytes for which this method is applicable include any elements with an atomic number between 11 (sodium) and 92 (uranium), inclusive. Specific analytes for which this method was developed include:

Analyte	CAS No.	Minimum detectable limit
Nickel compounds	7440–02–0	<2 % of span.
Total chlorides	16887–00–6	<2 % of span.

APPENDIX J

SULFUR CONTINGENCY PLAN ***(Modified July 24, 2006)***

SULFUR CONTINGENCY PLAN
Frontier Refining Inc.

I) PURPOSE

This Sulfur Contingency Plan (SCP) is required under Condition #12 of New Source Review Permit MD-188 and Condition F9(a) of Title V Permit 30-149. These conditions state: "That Frontier shall prepare and submit to the Division, a contingency plan for the operation of the refinery during any time period when the sulfur recovery plant(s) is not operational. Such plan shall minimize emissions of SO_2 from the main plant flare to the extent possible, and shall be updated as necessary to reflect existing refinery operations."

With this permit condition in mind, the following is the purpose of the SCP:

> "To eliminate and/or minimize emissions of SO_2 to the atmosphere as the result of acid gas combustion (flaring or incineration) when the Sulfur Recovery Unit(s) and/or the Amine Unit are not operational"

II) PROCESS FLOW

A simplified process flow diagram of Frontier's sulfur complex is shown below.

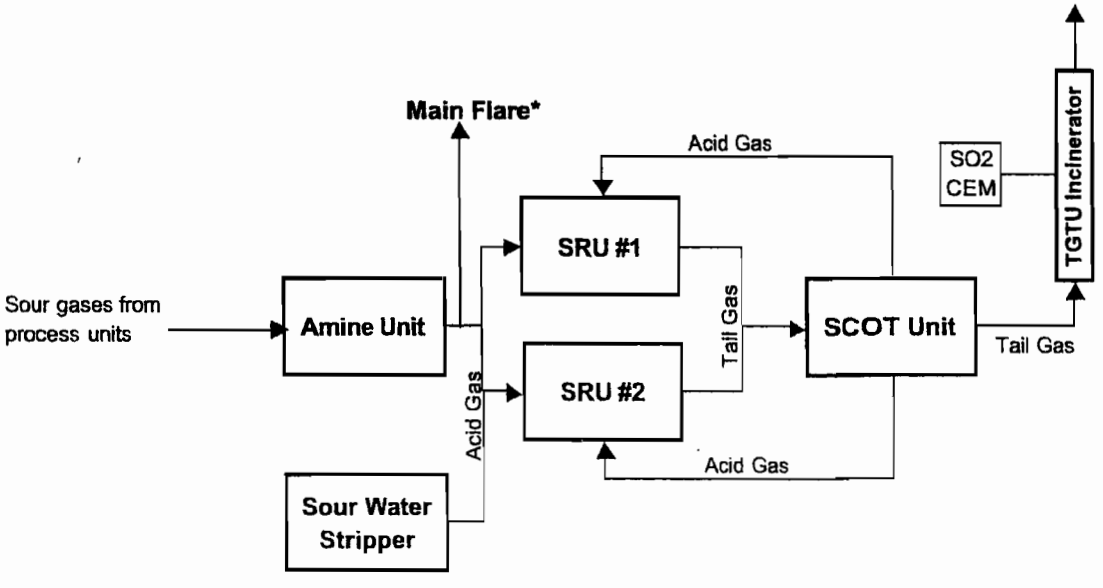

* There is normally no flow to the Main Flare

III) PLANNED SHUTDOWNS

A) General Planned Shutdowns

For planned shutdowns of one or both of the SRUs or the Amine Unit, Frontier will formulate an SO_2 minimization plan to accommodate the specific circumstances and submit the plan to Wyoming Department of Environmental Quality (WDEQ) for approval

if the shutdown(s) is expected to have excess emissions above the 500 lb EPCRA reportable quantitiy (RQ) for SO_2. Frontier will try to schedule planned SRU shutdowns with normal maintenance of the FCCU, Coker or DHDS.

Frontier will attempt to submit the plan early enough so that the WDEQ has time to review, comment on, and approve the plan, however this may not always be possible if a shutdown is planned on short notice (e.g. to repair a component in order to avert an emergency shutdown).

B) Planned Amine Regenerator Shutdown

If the Amine Regenerator has to be shut down for maintenance, Frontier will assess the feasibilty of using the SCOT Unit Regenerator to process the Diethanolamine (DEA) from the Amine Contactor. This will prevent the need to burn sour gas in the refinery's heaters or flares or to flare acid gas.

In 2001, Frontier installed the necessary piping to allow the SCOT Unit Regenerator to serve both the Amine Contactor and the SCOT Contactor, under limited load. This requires the blending of the DEA with the Methyldiethanolamine (MDEA) in the SCOT system and a subsequent draining and refilling of the SCOT Unit with MDEA when the systems are separated. Excess SO_2 emissions are generated after the initial switch (before the system is brought back within operating specifications) and after the final switch (while the SCOT Unit is being refilled with MDEA and before it is brought back within operating specifications).

In assessing the feasibility of such a procedure, Frontier will consider the estimated excess SO_2 emissions to be generated, the possible impacts of the SO_2 emissions on the surrounding community, and lastly, the cost of the MDEA required for refilling the SCOT Unit at the end of the procedure.

IV) UNPLANNED SHUTDOWNS

All unplanned shutdowns involve a necessary time lag, during which Frontier must make decisions about how quickly a shut down SRU or Amine Unit may be brought back on line. If a unit is deemed to be imminently 're-startable', none of the steps may need to be taken. Many of the steps outlined in the following procedures take time to put into effect (e.g. rate reductions), and therefore some acid gas flaring may be involved with any event.

A) Single SRU Shutdown

The acid gas feed to the SRU that is still on-line will be adjusted so that it handles the total acid gas feed. If this is not enough to eliminate acid gas flaring, the following steps will be taken (not necessarily in order) until no acid gas is flared.

- Put Sour Water Stripper (SWS) on circulation and minimize stripping steam
- Reduce or remove cracked stock feed from DHDS
- Reduce rates at FCCU, DHDS, or Coker
- Reduce FCCU riser temperature to minimum
- Place DHDS on circulation

B) Both SRUs Shutdown

If both SRUs shut down, there is no chance to eliminate acid gas flaring. Therefore, all of the following steps will be taken (not necessarily in order) to minimize acid gas flaring.

- Put SWS on circulation and minimize stripping steam
- Place DHDS on circulation
- Reduce rates at FCCU and Coker to minimum
- Reduce FCCU riser temperature to minimum

Acid gas is directed to the flare until one of the SRUs can be restarted.

C) Amine Unit Shutdown

If the Amine Unit is shutdown, acid gas will not be flared as a result. However, sour gas will either be burned in the heaters or flared. Although the total excess pounds of SO_2 are the same as if acid gas was flared, flaring sour gas has a much lower potential for negatively impacting the surrounding community and environment since the concentration of H_2S in sour gas (~10%) is much lower than the concentration in acid gas (~90%). Consequently, the concentration of emitted SO_2 is lower for sour gas.

Also, a minimum amount of acid gas is required to operate the SRUs. If the Amine Unit is down, the only source of acid gas is the SWS – this is not enough acid gas to operate even one SRU. Therefore, both of the SRUs and the SCOT will have to be shut down as well. The steps outlined for shutdown of both SRUs (item B, above) will be followed.

APPENDIX K

WAQSR CHAPTER 5, SECTION 2 (m) AND
CHAPTER 5, SECTION 3 (m) FLARE REQUIREMENTS

WAQSR Chapter 5, Section 2(m)
General Control Device Requirements (Flares)

(i) This section contains requirements for control devices used to comply with applicable subparts of Chapter 5, Section 2. The requirements are placed here for administrative convenience and only apply to facilities covered by subparts referring to this Section.***(ii) Flares:***

(A) General Design:

(I) Flares shall be designed for and operated with no visible emissions as determined by the methods specified in paragraph (D), except for periods not to exceed a total of 5 minutes during any 2 consecutive hours.

(II) Flares shall be operated with flame present at all times, as determined by the methods specified in paragraph (D).

(III) Flares shall be used only with the net heating value of the gas being combusted being 300 Btu/Scf (11.2 MJ/scm) or greater if the flare is steam-assisted or air-assisted or with the net heating value of the gas being combusted being 200 Btu/scf (7.45 MJ/scm) or greater if the flare is nonassisted. The net heating value of the gas being combusted shall be determined by the methods specified in paragraph (D).

(IV) Steam-assisted and nonassisted flare shall be designed for and operated with an exit velocity as determined by the methods specified in paragraph (D)(IV), less than 60 ft/sec (18.3 m/sec) except as follows:

(1.) Steam-assisted and nonassisted flares designed for and operated with an exit velocity, as determined by the methods specified in paragraph (D)(IV) equal to or greater than 60 ft/sec (18.3 m/sec) but less than 400 ft/sec (122 m/sec) are allowed if the net heating value of the gas being combusted is greater than 1000 Btu/scf (37.3 MJ/scm).

(2.) Steam-assisted and nonassisted flares designed for and operated with an exit velocity as determined by the methods specified in paragraph (D)(IV), less than the velocity Vmax, as determined by the method specified in paragraph (D)(V), and less than 400 ft/sec (122 m/sec) are allowed.

(V) Air-assisted flares shall be designed and operated with an exit velocity less than the velocity, V_{max}, as determined by the method specified in paragraph (D)(VI).

(VI) Flares used to comply with this section shall be steam-assisted, air-assisted or nonassisted.

(B) Owners or operators of flares used to comply with the provisions of this section shall monitor these control devices to ensure that they are operated and maintained in conformance with their designs. Applicable subparts will provide provisions stating how owners or operators of flares shall monitor these control devices.

(C) Flares used to comply with the provisions of an applicable subpart shall be operated at all times when emissions may be vented to them.

(D) Determinations:

(I) Reference Method 22 shall be used to determine the compliance of flares with the visible emission provisions of this Section. The observation period is 2 hours and shall be used according to Method 22.

(II) The presence of a flare pilot flame shall be monitored using a thermocouple or any other equivalent device to detect the presence of a flame.

(III) The net heating value of the gas being combusted in a flare shall be calculated using the following equation:

$$H_T = K\sum_{i=1}^{n} C_i H_i$$

where:

H_T = Net heating value of the sample, MJ/scm; where the net enthalpy per mole of offgas is based on combustion at 25°C and 760 mm Hg, but the standard temperature for determining the value corresponding to one mole is 20°C.

K = Constant, $1.740^{x}10^{-7}$(1/ppm)(gmole/scm)(MJ/kcal) where the standard temperature of (gmole/scm) is 20° C.

C_i = Concentration of sample component i in ppm on a wet basis, as measured for organics by reference method 18 and measured for hydrogen and carbon monoxide by ASTM D1946-77.

H_i = Net heat of combustion of sample component i, kcal/g mole at 25°C and 760 mm Hg. The heats of combustion may be determined using ASTM D2382-76 if published values are not available or cannot be calculated.

(IV) The actual exit velocity of a flare shall be determined by dividing the volumetric flowrate (in units of standard temperature and pressure), as determined by reference methods 2, 2A, 2C, or 2D as appropriate; by the unobstructed (free) cross sectional area of the flare tip.

(V) The maximum permitted velocity Vmax, for flares complying with paragraph (A)(IV)(2.) shall be determined by the following equation:

$$Log_{10}(V_{max}) = \frac{H_T + 28.80}{31.7}$$

V_{max} = Maximum permitted velocity, m/sec

28.8 = Constant

31.7 = Constant

H_T = The net heating value as determined in paragraph (D)(III)

(VI) The maximum permitted velocity, Vmax, for air-assisted flares shall be determined by the following equation:

$$V_{max} = 8.706 + 0.7084(H_T)$$

V_{max} = Maximum permitted velocity m/sec

8.706 = Constant

0.7084 = Constant

H_T = The net heating value as determined in paragraph (D)(III).

WAQSR Chapter 5, Section 3(m)
General Control Device Requirements (Flares)

(i) Applicability. This subsection contains requirements for control devices used to comply with provisions in relevant standards. These requirements apply only to affected sources covered by relevant standards referring directly or indirectly to this subsection.

(ii) Flares.

(A) Owners or operators using flares to comply with the provisions of this section shall monitor these control devices to assure that they are operated and maintained in conformance with their designs. Applicable subparts will provide provisions stating how owners or operators using flares shall monitor these control devices.

(B) Flares shall be steam-assisted, air-assisted, or non-assisted.

(C) Flares shall be operated at all times when emissions may be vented to them.

(D) Flares shall be designed for and operated with no visible emissions, except for periods not to exceed a total of 5 minutes during any 2 consecutive hours. Test Method 22 in 40 CFR part 60, Appendix A shall be used to determine the compliance of flares with the visible emission provisions of this section. The observation period is 2 hours and shall be used according to Method 22.

(E) Flares shall be operated with a flame present at all times. The presence of a flare pilot flame shall be monitored using a thermocouple or any other equivalent device to detect the presence of a flame.

(F) Flares shall be used only with the net heating value of the gas being combusted at 11.2 MJ/scm (300 Btu/scf) or greater if the flare is steam-assisted or air-assisted; or with the net heating value of the gas being combusted at 7.45 MJ/scm (Btu/scf) or greater if the flare is non-assisted. The net heating value of the gas being combusted in a flare shall be calculated using the following equation:

$$H_T = K\sum_{i=1}^{n} C_i H_i$$

Where:

H_T = Net heating value of the sample, MJ/scm; where the net enthalpy per mole of offgas is based on combustion at 25°C and 760 mm Hg, but the standard temperature for determining the volume corresponding to one mole is 20°C.

K = Constant =

$$1.740 \times 10^{-7} \left(\frac{1}{ppmv}\right)\left(\frac{gmole}{scm}\right)\left(\frac{MJ}{kcal}\right)$$

where the standard temperature for (g-mole/scm) is 20°C.

C_i = Concentration of sample component i in ppmv on a wet basis, as measured for organics by Test Method 18 and measured for hydrogen and carbon monoxide by American Society for Testing and Materials (ASTM) D1946-77 (incorporated by reference as specified in subsection (q)).

H_i = Net heat of combustion of sample component i, kcal/g-mole at 25°C and 760 mm Hg. The heats of combustion may be determined using ASTM D2382-76 (incorporated by reference as specified in subsection (q)) if published values are not available or cannot be calculated.

n = Number of sample components.

(G) (I) Steam-assisted and nonassisted flares shall be designed for and operated with an exit velocity less than 18.3 m/sec (60 ft/sec), except as provided in paragraphs (ii)(G)(II) and (ii)(G)(III) of this subsection. The actual exit velocity of a flare shall be determined by dividing by the volumetric flow rate of gas being combusted (in units of emission standard temperature and pressure), as determined by Test Methods 2, 2A, 2C, or 2D in 40 CFR part 60, Appendix A, as appropriate, by the unobstructed (free) cross-sectional area of the flare tip.

(II) Steam-assisted and nonassisted flares designed for and operated with an exit velocity, as determined by the method specified in paragraph (ii)(G)(I) of this subsection, equal to or greater than 18.3 m/sec (60 ft/sec) but less than 122 m/sec (400 ft/sec), are allowed if the net heating value of the gas being combusted is greater than 37.3 MJ/scm (1,000 Btu/scf).

(III) Steam-assisted and nonassisted flares designed for and operated with an exit velocity, as determined by the method specified in paragraph (ii)(G)(I) of this subsection, less than the velocity V_{max}, as determined by the method specified in this paragraph, but less than 122 m/sec (400 ft/sec) are allowed. The maximum permitted velocity, V_{max}, for flares complying with this paragraph shall be determined by the following equation:

$$Log_{10}(V_{max}) = \frac{H_T + 28.80}{31.7}$$

Where:

V_{max} = Maximum permitted velocity, m/sec.

28.8 = Constant.

31.7 = Constant.

H_T = The net heating value as determined in paragraph (ii)(F) of this subsection.

(H) Air-assisted flares shall be designed and operated with an exit velocity less than the velocity V_{max}. The maximum permitted velocity, V_{max}, for air-assisted flares shall be determined by the following equation:

$$V_{max} = 8.706 + 0.7084(H_T)$$

Where:

V_{max} = Maximum permitted velocity, m/sec.

8.706 = Constant.

0.7084 = Constant.

H_T = The net heating value as determined in paragraph (ii)(F) of this subsection.

APPENDIX L ***(Modified July 24, 2006)***

CHEYENNE REFINERY STORAGE VESSELS

STORAGE TANKS [a] *(Modified July 24, 2006)*			
TANK #	**LIQUIDS STORED**	**TYPE OF TANK**	**TANK CAPACITY (BBL)**
1-EA	AC-7	Fixed Roof (FR)	498
1-WA	AC-7	FR	550
1-1	Coker Distillate (MOSC)	FR	22,820
1-2	Fire Water	FR	24,727
1-3	Out of Service	FR	9,926
1-4	Out of Service	FR	9,953
1-7	Recovered Oil	FR	5,134
1--8	Unichem 8162	FR	300
1-9	Recovered Oil	FR	5,134
1-10	Coker Distillate (MOSC)	FR	1,936
1-12	Coker Distillate (MOSC)	FR	2,001
1-13	Cracked Stock Distillate	FR	1,827
1-14	Low Sulfur #2 Diesel	FR	20,617
1-15	Unleaded Gasoline	Internal Floating Roof (IFR)	20,790
1-16	Ethyl Alcohol	FR	2,380
1-17	Prem. Unleaded Gasoline	IFR	4,080
1-18	Coker Distillate (MOSC)	FR	2,380
1-19	Coker Distillate (MOSC)	FR	4,940
1-20	Slurry	FR	4,760
1-21	Alkylate	IFR	8,200
1-26	Low Sulfur #2 Diesel	FR	4,788
1-27	Out of Service	FR	5,150
1-28	Diesel	FR	4,788
1-29	Coker Gasoil	FR	10,140
1-32	Diesel	FR	8,937
1-33	Cracked Stock Distillate	FR	9,828
1-35	Cracked Stock Distillate	FR	1,000
1-40	Slurry	FR	9,720
1-41	Coker Distillate (MOSC)	FR	4,760
1-48	Coker Distillate	FR	1,232
1-49	Coker Distillate	FR	1,232
1-50	Vacuum Bottoms	FR	44,392
1-51	AC-7	FR	23,750
1-52	AC-7	FR	68,820
1-53	Slurry	FR	15,394
1-54	Vacuum Bottoms	FR	23,750
1-55	AC-10	FR	51,711
1-56	AC-10	FR	58,596
1-57	Out Of Service	FR	10,632

STORAGE TANKS [a] *(Modified July 24, 2006)*			
TANK #	**LIQUIDS STORED**	**TYPE OF TANK**	**TANK CAPACITY (BBL)**
1-58	Coker Gasoil	FR	9,828
1-59	Vacuum Bottoms	FR	58,596
1-60	Slurry	FR	604
1-61	Slurry	FR	570
1-62	Slurry	FR	570
1-63	Slurry	FR	570
1-64	Slurry	FR	570
1-65	Slurry	FR	570
1-70	Vacuum Bottoms	FR	570
1-71	Out of Service	FR	570
1-72	Out of Service	FR	570
1-73	Vacuum Bottoms	FR	570
1-74	Vacuum Bottoms	FR	570
1-75	Out Of Service	FR	570
1-80	AC-7/Slurry	FR	570
1-81	Vacuum Bottoms	FR	570
1-82	Vacuum Bottoms	FR	570
1-83	MC-800 (Asphalt)	FR	570
1-84	Vacuum Bottoms	FR	570
1-85	Vacuum Bottoms	FR	570
1-90	AC-20	FR	53,124
1-91	AC-10	FR	53,124
1-93	AC-20	FR	2,436
1-94	AC-10	FR	2,436
1-95	AC-10	FR	2,602
1-106	Unleaded Gasoline	External Floating Roof (EFR)	107,500
1-107	SR Distillate	EFR	71,681
2-2	SR Distillate	FR	1,927
2-3	SR Distillate	FR	1,886
2-5	Out of Service	FR	500
2-7	Cracked Stock Distillate	FR	2,397
2-8	Out Of Service	FR	2,554
2-11	SR Distillate	FR	2,288
2-12	SR Distillate	FR	2,288
2-13	Out of Service	FR	5,067
2-15	Diesel	FR	28,638
2-16	Diesel	FR	28,638
2-17	Cracked Stock Distillate	FR	26,690
2-20	Virgin Gas Oil	FR	9,666
2-21	Virgin Gas Oil	FR	9,666

STORAGE TANKS [a] *(Modified July 24, 2006)*			
TANK #	**LIQUIDS STORED**	**TYPE OF TANK**	**TANK CAPACITY (BBL)**
2-22	Cracked Stock Distillate	FR	9,558
2-23	Coker Gasoil	FR	9,531
2-26	Recovered Oil	FR	2,346
2-27	Out of Service	FR	2,552
2-28	Virgin Gas Oil	FR	76,152
2-34	Out of Service	FR	23,982
2-34A	***Reformate***	***EFR***	***23,982***
2-35	Alkylate	IFR	21,813
2-36	Recovered Oil	FR	4,698
2-50	Methanol	FR	400
2-60	Natural Gasoline	IFR	9,072
2-61	Sweet Naphtha	FR	9,828
2-62	SR Distillate	FR	9,828
2-63	Heavy Straight Run	FR	9,828
2-64	Slope Oil	FR	8,758
2-67	Light Straight Run	IFR	9,135
2-70	Sub-Octane No Lead Gasoline	EFR	29,876
2-71	Prem. Unleaded Gasoline	EFR	29,876
2-72	Crude Oil (RVP 5)	EFR	73,876
2-73	Crude Oil (RVP 5)	EFR	73,876
2-74	Crude Oil (RVP 5)	EFR	70,687
2-75	Coker Naphtha	EFR	70,880
2-100	***Low Sulfur Gasoline***	IFR	36,374
2-101	Diesel	FR	39,256
2-102	No Lead Gasoline	EFR	72,360
2-103	Wastewater	EFR	20,000
2-104	***High Sulfur Gasoline***	IFR	47,100
2-105	Coker Gas Oil	FR	47,025
101-WWTP	Wastewater	FR	22,000
41-WWTP	Recovered Oil	NA	1,119
36-Tk1002	Slop Oil	FR	1,340
DEA	Diethanolamine (DEA)	FR	1,571
1-AK-1	Asphalt	FR	992
36-TK1004	Coker Distillate	FR	900

[a] Actual tank capacities as of December 1998 - Updated February 2001.

APPENDIX M

[Reserved] (Modified July 24, 2006]

APPENDIX N

FUEL METER MAINTENANCE PLAN DESCRIPTION

FRONTIER

FRONTIER REFINING INC.
a Subsidiary of Frontier Oil Corporation

P.O. BOX 1588
CHEYENNE, WYOMING 82003-1588
(307) 634-3551
FAX (Main Office) (307) 771-8794
FAX (Purchasing) (307) 771-8795

OCT 1996
RECEIVED
AIR QUALITY
DIVISION

October 1, 1996
File 420.2

Mr. Charles A. Collins
Administrator
Air Quality Division
Wyoming Department of Environmental Quality
Herschler Building
122 West 25th Street
Cheyenne, Wyoming 82002

Subject: Fuel Gas Meter Installation Schedule

Dear Mr. Collins:

Condition 9 of permit MD-269 requires Frontier to install, operate, and maintain fuel gas meters, and to submit an installation schedule and maintenance plan for both the Gas Con and Alkylation Reboiler. This letter addresses the requirements of that condition.

The Alkylation Reboiler is equipped with a fuel gas meter while the Gas Con Reboiler is not equipped with a fuel gas meter. Installation of the Gas Con Reboiler meter will require a maintenance shutdown. The next Gas Con shutdown is scheduled for Spring 1997. Frontier intends to complete the installation at that time. Should the shutdown be delayed past May 1, 1997, Frontier will notify the Air Quality Division. Because this type of installation requires maintenance preparation prior to shutdown, it is unlikely that installation of the meter could occur during an unanticipated shutdown which may occur prior to the Spring 1997 turnaround. During the period that the Gas Con Reboiler is not equipped with a fuel gas meter, Frontier believes that the firing limit for the Gas Con Reboiler will not be exceeded since the new allowable emission rate is based on maximum potential-to-emit calculations.

In July 1996, the Alkylation Reboiler fuel gas meter was calibrated by Frontier maintenance personnel. This calibration will continue on a quarterly basis. The Gas Con Reboiler fuel gas meter will be calibrated by Frontier maintenance personnel within one month of its installation and subsequently will be calibrated quarterly. Calibrations for both fuel gas meters will include a zero check and verification of outputs at full span. Maintenance personnel will ensure that the outputs correspond to a known pressure.

Please contact Rob Gronewold, Environmental Coordinator, or me if you have questions concerning this matter.

Sincerely,

John Blake
Air Compliance Specialist

APPENDIX O ***(Amended July 24, 2006)***

PORTABLE ANALYZER MONITORING PROTOCOL

STATE OF WYOMING AIR QUALITY DIVISION
PORTABLE ANALYZER MONITORING PROTOCOL

Determination of Nitrogen Oxides, Carbon Monoxide and Oxygen Emissions from Natural Gas-Fired Reciprocating Engines, Combustion Turbines, Boilers, and Process Heaters Using Portable Analyzers

WYOMING DEPARTMENT OF ENVIRONMENTAL QUALITY
AIR QUALITY DIVISION
122 West 25th Street
Cheyenne, Wyoming 82002

April 21, 1999
Revised January 25, 2006

Approved By: _____
Dan Olson
Administrator

TABLE OF CONTENTS

1. APPLICABILITY AND PRINCIPLE ..... Page 4
   1.1 Applicability ..... Page 4
   1.2 Principle ..... Page 4

2. RANGE AND SENSITIVITY ..... Page 4
   2.1 Analytical Range ..... Page 4

3. DEFINITIONS ..... Page 5
   3.1 Measurement System ..... Page 5
   3.2 Nominal Range ..... Page 6
   3.3 Span Gas ..... Page 6
   3.4 Zero Calibration Error ..... Page 6
   3.5 Span Calibration Error ..... Page 6
   3.6 Response Time ..... Page 6
   3.7 Interference Check ..... Page 6
   3.8 Linearity Check ..... Page 7
   3.9 Stability Check ..... Page 7
   3.10 Stability Time ..... Page 7
   3.11 Initial NO Cell Temperature ..... Page 7
   3.12 Test ..... Page 7

4. MEASUREMENT SYSTEM PERFORMANCE SPECIFICATIONS ..... Page 7
   4.1 Zero Calibration Error ..... Page 7
   4.2 Span Calibration Error ..... Page 7
   4.3 Interference Response ..... Page 8
   4.4 Linearity ..... Page 8
   4.5 Stability Check Response ..... Page 8
   4.6 CO Measurement, H_2 Compensation ..... Page 8

5. APPARATUS AND REAGENTS ..... Page 8
   5.1 Measurement System ..... Page 8
   5.2 Calibration Gases ..... Page 11

6. MEASUREMENT SYSTEM PERFORMANCE CHECK PROCEDURES ..... Page 11
   6.1 Calibration Gas Concentration Certification ..... Page 11
   6.2 Linearity Check ..... Page 12
   6.3 Interference Check ..... Page 12
   6.4 Stability Check ..... Page 13

7. EMISSION TEST PROCEDURE ..... Page 14
7.1 Selection of Sampling Site and Sampling Points ..... Page 14
7.2 Warm Up Period ..... Page 15
7.3 Pretest Calibration Error Check ..... Page 15
7.4 NO Cell Temperature Monitoring ..... Page 16
7.5 Sample Collection ..... Page 16
7.6 Post Test Calibration Error Check ..... Page 17
7.7 Interference Check ..... Page 17
7.8 Re-Zero ..... Page 18

8. DATA COLLECTION ..... Page 18
8.1 Linearity Check Data ..... Page 19
8.2 Stability Check Data ..... Page 19
8.3 Pretest Calibration Error Check Data ..... Page 19
8.4 Test Data ..... Page 20
8.5 Post Test Calibration Error Check Data ..... Page 20
8.6 Corrected Test Results ..... Page 20

9. CALIBRATION CORRECTIONS ..... Page 21
9.1 Emission Data Corrections ..... Page 21

10. EMISSION CALCULATIONS ..... Page 21
10.1 Emission Calculations for Reciprocating Engines and Combustion Turbines Page 21
10.2 Emission Calculations for Heaters/Boilers ..... Page 27

11. REPORTING REQUIREMENTS AND RECORD KEEPING REQUIREMENTS ..... Page 28

CALIBRATION SYSTEM SCHEMATIC ..... Figure 1
LINEARITY CHECK DATA SHEET ..... FORM A
STABILITY CHECK DATA SHEET ..... FORM B
CALIBRATION ERROR CHECK DATA SHEET ..... FORM C
RECIPROCATING ENGINE TEST RESULTS ..... FORM D-1
COMBUSTION TURBINE TEST RESULTS ..... FORM D-2
HEATER/BOILER TEST RESULTS ..... FORM D-3

1. APPLICABILITY AND PRINCIPLE

1.1 Applicability. This method is applicable to the determination of nitrogen oxides (NO and NO_2), carbon monoxide (CO), and oxygen (O_2) concentrations in controlled and uncontrolled emissions from natural gas-fired reciprocating engines, combustion turbines, boilers, and process heaters using portable analyzers with electrochemical cells. The use of reference method equivalent analyzers is acceptable provided the appropriate reference method procedures in 40 CFR 60, Appendix A are used. Due to the inherent cross sensitivities of the electrochemical cells, this method is not applicable to other pollutants.

1.2 Principle. A gas sample is continuously extracted from a stack and conveyed to a portable analyzer for determination of NO, NO_2, CO, and O_2 gas concentrations using electrochemical cells. Analyzer design specifications, performance specifications, and test procedures are provided to ensure reliable data. Additions to or modifications of vendor-supplied analyzers (e.g. heated sample line, flow meters, etc.) may be required to meet the design specifications of this test method.

2. RANGE AND SENSITIVITY

2.1 Analytical Range. The analytical range for each gas component is determined by the electrochemical cell design. A portion of the analytical range is selected to be the nominal range by choosing a span gas concentration near the flue gas concentrations or permitted emission level in accordance with Sections 2.1.1, 2.1.2 and 2.1.3.

2.1.1 CO and NO Span Gases. Choose a span gas concentration such that the average stack gas reading for each test is greater than 25 percent of the span gas concentration. Alternatively, choose the span gas such that it is not greater than 3.33 times the concentration equivalent to the emission standard. If concentration results exceed 125 percent of the span gas at any time during the test, then the test for that pollutant is invalid.

2.1.2 NO_2 Span Gas. Choose a span gas concentration such that the average stack gas reading for each test is greater than 25 percent of the span gas concentration. Alternatively, choose the span gas concentration such that it is not greater than the ppm concentration value of the NO span gas. The tester should be aware NO_2 cells are generally designed to measure much lower concentrations than NO cells and the span gas should be chosen accordingly. If concentration results exceed 125 percent of the span gas at any time during the test, then the test for that pollutant is invalid.

2.1.3 O_2 Span Gas. The O_2 span gas shall be dry ambient air at 20.9% O_2.

3. DEFINITIONS

3.1 Measurement System. The total equipment required for the determination of gas concentration. The measurement system consists of the following major subsystems:

3.1.1 Sample Interface. That portion of a system used for one or more of the following: sample acquisition, sample transport, sample conditioning, or protection of the electrochemical cells from particulate matter and condensed moisture.

3.1.2 External Interference Gas Scrubber. A tube filled with scrubbing agent used to remove interfering compounds upstream of some electrochemical cells.

3.1.3 Electrochemical (EC) Cell. That portion of the system that senses the gas to be measured and generates an output proportional to its concentration. Any cell that uses diffusion-limited oxidation and reduction reactions to produce an electrical potential between a sensing electrode and a counter electrode.

3.1.4 Data Recorder. It is recommended that the analyzers be equipped with a strip chart recorder, computer, or digital recorder for recording measurement data. However, the operator may record the test results manually in accordance with the requirements of Section 7.5.

3.2 Nominal Range. The range of concentrations over which each cell is operated (25 to 125 percent of span gas value). Several nominal ranges may be used for any given cell as long as the linearity and stability check results remain within specification.

3.3 Span Gas. The high level concentration gas chosen for each nominal range.

3.4 Zero Calibration Error. For the NO, NO_2 and CO channels, the absolute value of the difference, expressed as a percent of the span gas, between the gas concentration exhibited by the gas analyzer when a zero level calibration gas is introduced to the analyzer and the known concentration of the zero level calibration gas. For the O_2 channel, the difference, expressed as percent O_2, between the gas concentration exhibited by the gas analyzer when a zero level calibration gas is introduced to the analyzer and the known concentration of the zero level calibration gas.

3.5 Span Calibration Error. For the NO, NO_2 and CO channels, the absolute value of the difference, expressed as a percent of the span gas, between the gas concentration exhibited by the gas analyzer when a span gas is introduced to the analyzer and the known concentration of the span gas. For the O_2 channel, the difference, expressed as percent O_2, between the gas concentration exhibited by the gas analyzer when a span gas is introduced to the analyzer and the known concentration of the span gas.

3.6 Response Time. The amount of time required for the measurement system to display 95 percent of a step change in the NO or CO gas concentration on the data recorder (90 percent of a step change for NO_2).

3.7 Interference Check. A method of quantifying analytical interferences from components in

the stack gas other than the analyte.

3.8 Linearity Check. A method of demonstrating the ability of a gas analyzer to respond consistently over a range of gas concentrations.

3.9 Stability Check. A method of demonstrating an electrochemical cell operated over a given nominal range provides a stable response and is not significantly affected by prolonged exposure to the analyte.

3.10 Stability Time. As determined during the stability check; the elapsed time from the start of the gas injection until a stable reading has been achieved.

3.11 Initial NO Cell Temperature. The temperature of the NO cell during the pretest calibration error check. Since the NO cell can experience significant zero drift with cell temperature changes in some situations, the cell temperature must be monitored if the analyzer does not display negative concentration results. Alternatively, manufacturer's documentation may be submitted showing the analyzer incorporates a NO cell temperature control and temperature exceedance warning system.

3.12 Test. The collection of emissions data from a source for an equal amount of time at each sample point and for a minimum of 21 minutes total.

4. MEASUREMENT SYSTEM PERFORMANCE SPECIFICATIONS

4.1 Zero Calibration Error. Less than or equal to ±3 percent of the span gas value for NO, NO_2, and CO channels and less than or equal to ±0.3 percent O_2 for the O_2 channel.

4.2 Span Calibration Error. Less than or equal to ±5 percent of the span gas value for NO, NO_2, and CO channels and less than or equal to ±0.5 percent O_2 for the O_2 channel.

4.3 Interference Response. The CO and NO interference responses must be less than or equal to 5 percent as calculated in accordance with Section 7.7.

4.4 Linearity. For the zero, mid-level, and span gases, the absolute value of the difference, expressed as a percent of the span gas, between the gas value and the analyzer response shall not be greater than 2.5 percent for NO, CO and O_2 cells and not greater than 3.0 percent for NO_2 cells.

4.5 Stability Check Response. The analyzer responses to CO, NO, and NO_2 span gases shall not vary more than 3.0 percent of span gas value over a 30-minute period or more than 2.0 percent of the span gas value over a 15-minute period.

4.6 CO Measurement, Hydrogen (H_2) Compensation. It is recommended that CO measurements be performed using a hydrogen-compensated EC cell since CO-measuring EC cells can experience significant reaction to the presence of H_2 in the gas stream. Sampling systems equipped with a scrubbing agent prior to the CO cell to remove H_2 interferent gases may also be used.

5. APPARATUS AND REAGENTS

5.1 Measurement System. Use any measurement system that meets the performance and design specifications in Sections 4 and 5 of this method. The sampling system shall maintain the gas sample at a temperature above the dew point up to the moisture removal system. The sample conditioning system shall be designed so there are no entrained water droplets in the gas sample when it contacts the electrochemical cells. A schematic of an acceptable measurement system is shown in Figure 1. The essential components of the measurement system are described below:

5.1.1 Sample Probe. Glass, stainless steel, or other nonreactive material, of sufficient length to sample per the requirements of Section 7. If necessary to prevent condensation, the sampling probe shall be heated.

5.1.2 Heated Sample Line. Heated (sufficient to prevent condensation) nonreactive tubing such as teflon, stainless steel, glass, etc. to transport the sample gas to the moisture removal system. (Includes any particulate filters prior to the moisture removal system.)

5.1.3 Sample Transport Lines. Nonreactive tubing such as teflon, stainless steel, glass, etc. to transport the sample from the moisture removal system to the sample pump, sample flow rate control, and electrochemical cells.

5.1.4 Calibration Assembly. A tee fitting to attach to the probe tip or where the probe attaches to the sample line for introducing calibration gases at ambient pressure during the calibration error checks. The vented end of the tee should have a flow indicator to ensure sufficient calibration gas flow. Alternatively use any other method that introduces calibration gases at the probe at atmospheric pressure.

5.1.5 Moisture Removal System. A chilled condenser or similar device (e.g., permeation dryer) to remove condensate continuously from the sample gas while maintaining minimal contact between the condensate and the sample gas.

5.1.6 Particulate Filter. Filters at the probe or the inlet or outlet of the moisture removal system and inlet of the analyzer may be used to prevent accumulation of particulate material in the measurement system and extend the useful life of the components. All filters shall be fabricated of materials that are nonreactive to the gas being sampled.

5.1.7 Sample Pump. A leak-free pump to pull the sample gas through the system at a flow rate sufficient to minimize the response time of the measurement system. The pump may be constructed of any material that is nonreactive to the gas being sampled.

5.1.8 Sample Flow Rate Control. A sample flow rate control valve and rotameter, or equivalent, to maintain a constant sampling rate within 10 percent during sampling and calibration error checks. The components shall be fabricated of materials that are nonreactive to the gas being sampled.

5.1.9 Gas Analyzer. A device containing electrochemical cells to determine the NO, NO_2, CO, and O_2 concentrations in the sample gas stream and, if necessary, to correct for interference effects. The analyzer shall meet the applicable performance specifications of Section 4. A means of controlling the analyzer flow rate and a device for determining proper sample flow rate (e.g., precision rotameter, pressure gauge downstream of all flow controls, etc.) shall be provided at the analyzer. (Note: Housing the analyzer in a clean, thermally-stable, vibration-free environment will minimize drift in the analyzer calibration, but this is not a requirement of the method.)

5.1.10 Data Recorder. A strip chart recorder, computer, or digital recorder, for recording measurement data. The data recorder resolution (i.e., readability) shall be at least 1 ppm for CO, NO, and NO_2; 0.1 percent O_2 for O_2; and one degree (C or F) for temperature.

5.1.11 External Interference Gas Scrubber. Used by some analyzers to remove interfering compounds upstream of a CO electrochemical cell. The scrubbing agent should be visible and should have a means of determining when the agent is exhausted (e.g., color indication).

5.1.12 NO Cell Temperature Indicator. A thermocouple, thermistor, or other device must be used to monitor the temperature of the NO electrochemical cell. The temperature may be monitored at the surface of the cell, within the cell or in the cell compartment. Alternatively, manufacturer's documentation may be submitted showing the analyzer incorporates a NO cell temperature control and temperature exceedance warning system.

5.1.13 Dilution Systems. The use of dilution systems will be allowed with prior approval of the Air Quality Division.

5.2 Calibration Gases. The CO, NO, and NO_2 calibration gases for the gas analyzer shall be CO in nitrogen or CO in nitrogen and O_2, NO in nitrogen, and NO_2 in air or nitrogen. The mid-level O_2 gas shall be O_2 in nitrogen.

5.2.1 Span Gases. Used for calibration error, linearity, and interference checks of each nominal range of each cell. Select concentrations according to procedures in Section 2.1. Clean dry air may be used as the span gas for the O_2 cell as specified in Section 2.1.3.

5.2.2 Mid-Level Gases. Select concentrations that are 40-60 percent of the span gas concentrations.

5.2.3 Zero Gas. Concentration of less than 0.25 percent of the span gas for each component. Ambient air may be used in a well ventilated area for the CO, NO, and NO_2 zero gases.

6. MEASUREMENT SYSTEM PERFORMANCE CHECK PROCEDURES. Perform the following procedures before the measurement of emissions under Section 7.

6.1 Calibration Gas Concentration Certification. For the mid-level and span cylinder gases, use calibration gases certified according to EPA Protocol 1 procedures. Calibration gases must meet the criteria under 40 CFR 60, Appendix F, Section 5.1.2 (3). Expired Protocol 1 gases may be recertified using the applicable reference methods.

6.2 Linearity Check. Conduct the following procedure once for each nominal range to be used on each electrochemical cell (NO, NO_2, CO, and O_2). After a linearity check is completed, it remains valid for five consecutive calendar days. After the five calendar day period has elapsed, the linearity check must be reaccomplished. Additionally, reaccomplish the linearity check if the cell is replaced. (If the stack NO_2 concentration is less than 5% of the stack NO concentration as determined using the emission test procedures under Section 7, the NO_2 linearity check is not required. However, the NO_2 cell shall be calibrated in accordance with the manufacturer's instructions, the pretest calibration error check and post test calibration calibration error check shall be conducted in accordance with Section 7, and the test results shall be added to the NO test values to obtain a total NO_X concentration.)

6.2.1 Linearity Check Gases. For each cell obtain the following gases: zero (0-0.25 percent of nominal range), mid-level (40-60 percent of span gas concentration), and span gas (selected according to Section 2.1).

6.2.2 Linearity Check Procedure. If the analyzer uses an external interference gas scrubber with a color indicator, using the analyzer manufacturer's recommended procedure, verify the scrubbing agent is not depleted. After calibrating the analyzer with zero and span gases, inject the zero, mid-level, and span gases appropriate for each nominal range to be used on each cell. Gases need not be injected through the entire sample handling system. Purge the analyzer briefly with ambient air between gas injections. For each gas injection, verify the flow rate is constant and the analyzer responses have stabilized before recording the responses on Form A.

6.3 Interference Check. A CO cell response to the NO and NO_2 span gases or an NO cell response to the NO_2 span gas during the linearity check may indicate interferences. If these cell responses are observed during the linearity check, it may be desirable to quantify the CO cell response to the NO and NO_2 span gases and the NO cell response to the NO_2 span gas during the linearity check and use estimated stack gas CO, NO and NO_2 concentrations to evaluate whether or not the portable analyzer will meet the post test interference check requirements of Section 7.7. This evaluation using the linearity check data is optional. However, the interference checks

under Section 7.7 are manditory for each test.

6.4 Stability Check. Conduct the following procedure once for the maximum nominal range to be used on each electrochemical cell (NO, NO_2 and CO). After a stability check is completed, it remains valid for five consecutive calendar days. After the five calendar day period has elapsed, the stability check must be reaccomplished. Additionally, reaccomplish the stability check if the cell is replaced or if a cell is exposed to gas concentrations greater than 125 percent of the highest span gas concentration. (If the stack NO_2 concentration is less than 5% of the stack NO concentration as determined using the emission test procedures under Section 7, the NO_2 stability check is not required. However, the NO_2 cell shall be calibrated in accordance with the manufacturer's instructions, the pretest calibration error check and post test calibration calibration error check shall be conducted in accordance with Section 7, and the test results shall be added to the NO test values to obtain a total NO_X concentration.)

6.4.1 Stability Check Procedure. Inject the span gas for the maximum nominal range to be used during the emission testing into the analyzer and record the analyzer response at least once per minute until the conclusion of the stability check. One-minute average values may be used instead of instantaneous readings. After the analyzer response has stabilized, continue to flow the span gas for at least a 30-minute stability check period. Make no adjustments to the analyzer during the stability check except to maintain constant flow. Record the stability time as the number of minutes elapsed between the start of the gas injection and the start of the 30-minute stability check period. As an alternative, if the concentration reaches a peak value within five minutes, you may choose to record the data for at least a 15-minute stability check period following the peak.

6.4.2 Stability Check Calculations. Determine the highest and lowest concentrations recorded during the 30-minute period and record the results on Form B. The absolute value of the difference between the maximum and minimum values recorded during the 30-minute period must be less than 3.0 percent of the span gas concentration. Alternatively, record stability check data in the same manner for the 15-minute period following the peak concentration. The

difference between the maximum and minimum values for the 15-minute period must be less than 2.0 percent of the span gas concentration.

7. EMISSION TEST PROCEDURES. Prior to performing the following emission test procedures, calibrate/challenge all electrochemical cells in the analyzer in accordance with the manufacturer's instructions.

7.1 Selection of Sampling Site and Sampling Points.

7.1.1 Reciprocating Engines. Select a sampling site located at least two stack diameters downstream of any disturbance (e.g., turbocharger exhaust, crossover junction, or recirculation take-offs) and one half stack diameter upstream of the gas discharge to the atmosphere. Use a sampling location at a single point near the center of the duct.

7.1.2 Combustion Turbines. Select a sampling site and sample points according to the procedures in 40 CFR 60, Appendix A, Method 20. Alternatively, the tester may choose an alternative sampling location and/or sample from a single point in the center of the duct if previous test data demonstrate the stack gas concentrations of CO, NO_X, and O_2 do not vary significantly across the duct diameter.

7.1.3 Boilers/Process Heaters. Select a sampling site located at least two stack diameters downstream of any disturbance and one half stack diameter upstream of the gas discharge to the atmosphere. Use a sampling location at a single point near the center of the duct.

7.2 Warm Up Period. Assemble the sampling system and allow the analyzer and sample interface to warm up and adjust to ambient temperature at the location where the stack measurements will take place.

7.3 Pretest Calibration Error Check. Conduct a zero and span calibration error check before testing each new source. Conduct the calibration error check near the sampling location just prior to the start of an emissions test. Keep the analyzer in the same location until the post test calibration error check is conducted.

7.3.1 Scrubber Inspection. For analyzers that use an external interference gas scrubber tube, inspect the condition of the scrubbing agent and ensure it will not be exhausted during sampling. If scrubbing agents are recommended by the manufacturer, they should be in place during all sampling, calibration and performance checks.

7.3.2 Zero and Span Procedures. Inject the zero and span gases using the calibration assembly. Ensure the calibration gases flow through all parts of the sample interface. During this check, make no adjustments to the system except those necessary to achieve the correct calibration gas flow rate at the analyzer. Set the analyzer flow rate to the value recommended by the analyzer manufacturer. Allow each reading to stabilize before recording the result on Form C. The time allowed for the span gas to stabilize shall be no less than the stability time noted during the stability check. After achieving a stable response, disconnect the gas and briefly purge with ambient air.

7.3.3 Response Time Determination. Determine the NO and CO response times by observing the time required to respond to 95 percent of a step change in the analyzer response for both the zero and span gases. Note the longer of the two times as the response time. For the NO_2 span gas record the time required to respond to 90 percent of a step change.

7.3.4 Failed Pretest Calibration Error Check. If the zero and span calibration error check results are not within the specifications in Section 4, take corrective action and repeat the calibration error check until acceptable performance is achieved.

7.4 NO Cell Temperature Monitoring. Record the initial NO cell temperature during the pretest calibration error check on Form C and monitor and record the temperature regularly (at least once each 7 minutes) during the sample collection period on Form D. If at any time during sampling, the NO cell temperature is 85 degrees F or greater and has increased or decreased by more than 5 degrees F since the pretest calibration, stop sampling immediately and conduct a post test calibration error check per Section 7.6, re-zero the analyzer, and then conduct another pretest calibration error check per Section 7.3 before continuing. (It is recommended that testing be discontinued if the NO cell exceeds 85 degrees F since the design characteristics of the NO cell indicate a significant measurement error can occur as the temperature of the NO cell increases above this temperature. From a review of available data, these errors appear to result in a positive bias of the test results.)

Alternatively, manufacturer's documentation may be submitted showing the analyzer is configured with an automatic temperature control system to maintain the cell temperature below 85 degrees F (30 degrees centigrade) and provides automatic temperature reporting any time this temperature is exceeded. If automatic temperature control/exceedance reporting is used, test data collected when the NO cell temperature exceeds 85 degrees F is invalid.

7.5 Sample Collection. Position the sampling probe at the first sample point and begin sampling at the same rate used during the calibration error check. Maintain constant rate sampling (± 10 percent of the analyzer flow rate value used in Section 7.3.2) during the entire test. Sample for an equal period of time at each sample point. Sample the stack gas for at least twice the response time or the period of the stability time, whichever is greater, before collecting test data at each sample point. A 21 minute period shall be considered a test for each source. When sampling combustion turbines per Section 7.1.2, collect test data as required to meet the requirements of 40 CFR 60, Appendix A, Method 20. Data collection should be performed for

an equal amount of time at each sample point and for a minimum of 21 minutes total. The concentration data must be recorded either (1) at least once each minute, or (2) as a block average for the test using values sampled at least once each minute. Do not break any seals in the sample handling system until after the post test calibration error check (this includes opening the moisture removal system to drain condensate).

7.6 Post Test Calibration Error Check. Immediately after the test, conduct a zero and span calibration error check using the procedure in Section 7.3. Conduct the calibration error check at the sampling location. Make no changes to the sampling system or analyzer calibration until all of the calibration error check results have been recorded. If the zero or span calibration error exceeds the specifications in Section 4, then all test data collected since the previous calibration error check are invalid. If the sampling system is disassembled or the analyzer calibration is adjusted, repeat the pretest calibration error check before conducting the next test.

7.7 Interference Check. Use the post test calibration error check results and average emission concentrations for the test to calculate interference responses (I_{NO} and I_{CO}) for the CO and NO cells. If an interference response exceeds 5 percent, all emission test results since the last successful interference test for that compound are invalid.

7.7.1 CO Interference Response.

$$I_{CO} = [(\frac{R_{CO-NO}}{C_{NOG}})(\frac{C_{NOS}}{C_{COS}}) + (\frac{R_{CO-NO_2}}{C_{NO_2G}})(\frac{C_{NO_2S}}{C_{COS}})]x100$$

where:

I_{CO}	= CO interference response (percent)
R_{CO-NO}	= CO response to NO span gas (ppm CO)
C_{NOG}	= concentration of NO span gas (ppm NO)
C_{NOS}	= concentration of NO in stack gas (ppm NO)
C_{COS}	= concentration of CO in stack gas (ppm CO)
R_{CO-NO2}	= CO response to NO_2 span gas (ppm CO)
C_{NO2G}	= concentration of NO_2 span gas (ppm NO_2)

C_{NO2S} = concentration of NO_2 in stack gas (ppm NO_2)

7.7.2 NO Interference Response.

$$I_{NO} = \left(\frac{R_{NO\text{-}NO_2}}{C_{NO_2G}}\right)\left(\frac{C_{NO_2S}}{C_{NO_XS}}\right)x100$$

where:

I_{NO} = NO interference response (percent)

$R_{NO\text{-}NO2}$ = NO response to NO_2 span gas (ppm NO)

C_{NO2G} = concentration of NO_2 span gas (ppm NO_2)

C_{NO2S} = concentration of NO_2 in stack gas (ppm NO_2)

C_{NOxS} = concentration of NO_X in stack gas (ppm NO_X)

7.8 Re-Zero. At least once every three hours, recalibrate the analyzer at the zero level according to the manufacturer's instructions and conduct a pretest calibration error check before resuming sampling. If the analyzer is capable of reporting negative concentration data (at least 5 percent of the span gas below zero), then the tester is not required to re-zero the analyzer.

8. DATA COLLECTION. This section summarizes the data collection requirements for this protocol.

8.1 Linearity Check Data. Using Form A, record the analyzer responses in ppm NO, NO_2, and CO, and percent O_2 for the zero, mid-level, and span gases injected during the linearity check under Section 6.2.2. To evaluate any interferences, record the analyzer responses in ppm CO to the NO and NO_2 span gases and the analyzer response in ppm NO to the NO_2 span gas. Calculate the CO and NO interference responses using the equations under Sections 7.7.1 and 7.7.2, respectively, and estimated stack gas CO, NO and NO_2 concentrations.

8.2 Stability Check Data. Record the analyzer response at least once per minute during the stability check under Section 6.4.1. Use Form B for each pollutant (NO, NO_2, and CO). One-minute average values may be used instead of instantaneous readings. Record the stability time as the number of minutes elapsed between the start of the gas injection and the start of the 30-minute stability check period. If the concentration reaches a peak value within five minutes of the gas injection, you may choose to record the data for at least a 15-minute stability check period following the peak. Use the information recorded to determine the analyzer stability under Section 6.4.2.

8.3 Pretest Calibration Error Check Data. On Form C, record the analyzer responses to the zero and span gases for NO, NO_2, CO, and O_2 injected prior to testing each new source. Record the calibration zero and span gas concentrations for NO, NO_2, CO, and O_2. For NO, NO_2 and CO, record the absolute difference between the analyzer response and the calibration gas concentration, divide by the span gas concentration, and multiply by 100 to obtain the percent of span. For O_2, record the absolute value of the difference between the analyzer response and the O_2 calibration gas concentration. Record whether the calibration is valid by comparing the percent of span or difference between the calibration gas concentration and analyzer O_2 response, as applicable, with the specifications under Section 4.1 for the zero calibrations and Section 4.2 for the span calibrations. Record the response times for the NO, CO, and NO_2 zero and span gases as described under Section 7.3.3. Select the longer of the two times for each pollutant as

the response time for that pollutant. Record the NO cell temperature during the pretest calibration.

8.4 Test Data. On Form D-1, D-2, or D-3, record the source operating parameters during the test. Record the test start and end times. Record the NO cell temperature after one third of the test (e.g., after seven minutes) and after two thirds of the test (e.g., after 14 minutes). From the analyzer responses recorded each minute during the test, obtain the average flue gas concentration of each pollutant. These are the uncorrected test results.

8.5 Post Test Calibration Error Check Data. On Form C, record the analyzer responses to the zero and span gases for NO, NO_2, CO, and O_2 injected immediately after the test. To evaluate any interferences, record the analyzer responses in ppm CO to the NO and NO_2 span gases and the analyzer response in ppm NO to the NO_2 span gas. Record the calibration zero and span gas concentrations for NO, NO_2, CO, and O_2. For NO, NO_2 and CO, record the absolute difference between the analyzer response and the calibration gas concentration, divide by the span gas concentration, and multiply by 100 to obtain the percent of span. For O_2, record the absolute value of the difference between the analyzer response and the O_2 calibration gas concentration. Record whether the calibration is valid by comparing the percent of span or difference between the calibration gas concentration and analyzer O_2 response, as applicable, with the specifications under Section 4.1 for the zero calibrations and Section 4.2 for the span calibrations. (If the pretest and post test calibration error check results are not within the limits specified in Sections 4.1 and 4.2, data collected during the test is invalid and the test must be repeated.) Record the NO cell temperature during the post test calibration. Calculate the average of the monitor readings during the pretest and post test calibration error checks for the zero and span gases for NO, NO_2, CO, and O_2. The pretest and post test calibration error check results are used to make the calibration corrections under Section 9.1. Calculate the CO and NO interference responses using the equations under Sections 7.7.1 and 7.7.2, respectively and measured stack gas CO, NO and NO_2 concentrations.

8.6 Corrected Test Results. Correct the test results using the equation under Section 9.1. Add

the corrected NO and NO_2 concentrations together to obtain the corrected NO_X concentration. Calculate the emission rates using the equations under Section 10 for comparison with the emission limits. Record the results on Form D-1, D-2, or D-3. Sign the certification regarding the accuracy and representation of the emissions from the source.

9. CALIBRATION CORRECTIONS

9.1 Emission Data Corrections. Emissions data shall be corrected for a test using the following equation. (Note: If the pretest and post test calibration error check results are not within the limits specified in Sections 4.1 and 4.2, the test results are invalid and the test must be repeated.)

$$C_{Corrected} = (C_R - C_O)\frac{C_{MA}}{C_M - C_O}$$

where: $C_{Corrected}$ = corrected flue gas concentration (ppm)
C_R = flue gas concentration indicated by gas analyzer (ppm)
C_o = average of pretest and post test analyzer readings during the zero checks (ppm)
C_M = average of pretest and post test analyzer readings during the span checks (ppm)
C_{MA} = actual concentration of span gas (ppm)

10. EMISSION CALCULATIONS

10.1 Emission Calculations for Reciprocating Engines and Combustion Turbines. Emissions shall be calculated and reported in units of the allowable emission limit as specified in the permit. The allowable may be stated in pounds per hour (lb/hr), grams per horsepower hour (gm/hp-hr), or both. EPA Reference Method 19 shall be used as the basis for calculating the emissions. As an alternative, EPA Reference Methods 1-4 may be used to obtain a stack volumetric flow rate.

10.1.1 Reciprocating Engines and Combustion Turbines Above 500 Horsepower. All reciprocating engines and combustion turbines above 500 horsepower (site-rated) should be equipped with fuel flow meters for measuring fuel consumption during the portable analyzer test.

The fuel meter shall be maintained and calibrated according to the manufacturer's recommendations. Records of all maintenance and calibrations shall be kept for five years. Reciprocating engines above 500 horsepower which are not equipped with fuel flow meters may use the site-rated horsepower and default specific fuel consumption factors, based on the higher heating value of the fuel, of 9,400 Btu/hp-hr for 4-cycle engines (controlled and uncontrolled) and 2-cycle lean burn engines and 11,000 Btu/hp-hr for 2-cycle uncontrolled (non-lean burn) engines to calculate emission rates. Emissions shall be calculated using the following methods.

10.1.1.1 Reciprocating Engines and Combustion Turbines Equipped with Fuel Meters. EPA Reference Method 19 and heat input per hour (MMBtu/hr) shall be used to calculate a pound per hour emission rate. Heat input per hour shall be based on the average hourly fuel usage rate during the test and the higher heating value of the fuel consumed. The emission rates shall be calculated using the following equations.

$$lb/hr\ NO_X = (ppm\ NO_{X_{corrected}})(1.19x10^{-7})(F\ Factor_{Note1})\left(\frac{20.9}{20.9 - O_2\%_{corrected}}\right)(Heat\ Input\ Per\ Hour_{Note2})$$

$$lb/hr\ CO = (ppm\ CO_{corrected})(7.27x10^{-8})(F\ Factor_{Note1})\left(\frac{20.9}{20.9 - O_2\%_{corrected}}\right)(Heat\ Input\ Per\ Hour_{Note2})$$

Note 1 - Use 8710 dscf/MMBtu unless calculated based on actual fuel gas composition and higher heating value of the fuel.

Note 2 - Heat input per hour (MMBtu/hr) shall be based on the average hourly fuel usage during the test and the higher heating value of the fuel consumed.

If the reciprocating engine or combustion turbine horsepower can be derived from operating conditions during the portable analyzer test, this derived horsepower should be used to calculate a gram per horsepower hour emission rate using the following equations. Information showing the derivation of the horsepower shall be provided with the test results.

$$gm/hp\text{ - }hr\ CO = \frac{(lb/hr\ CO)(454)}{(Tested\ Horsepower_{Note\ 1})}$$

$$gm/hp\text{ - }hr\ NO_X = \frac{(lb/hr\ NO_X)(454)}{(Tested\ Horsepower_{Note\ 1})}$$

Note 1 - Horsepower determined during the test.

If the reciprocating engine horsepower during the time of testing cannot determined from the operating data, the operating horsepower for the time of the test shall be calculated based on the heat input per hour during the test and the default values shown below for specific fuel consumption based on the higher heating value of the fuel. Heat input per hour (MMBtu/hr) shall be calculated based on the average hourly fuel usage during the test and the higher heating value of the fuel consumed. For 4-cycle engines (controlled and uncontrolled) and 2-cycle lean burn engines, use a default specific fuel consumption of 9,400 Btu/hp-hr. For 2-cycle uncontrolled (non-lean burn) engines, use a default specific fuel consumption of 11,000 Btu/hp-hr. Calculate the gram per horsepower hour emission rates using the following equations.

$$Engine\ Horsepower = \frac{(Heat\ Input\ Per\ Hour_{Note\ 1})(10^6)}{(Specific\ Fuel\ Consumption_{Note\ 2})}$$

$$gm/hp\text{ - }hr\ NO_X = \frac{(lb/hr\ NO_X)(454)}{(Engine\ Horsepower)}$$

$$gm/hp\text{ - }hr\ CO = \frac{(lb/hr\ CO)(454)}{(Engine\ Horsepower)}$$

Note 1 - Heat input per hour (MMBtu/hr) shall be based on the average hourly fuel usage during the test and the higher heating value of the fuel consumed.

Note 2 - Default Specific Fuel Consumption (Btu/hp-hr) shall be as defined above for the particular type of engine tested.

If the combustion turbine horsepower cannot be calculated during the testing, the emissions shall be reported in terms of concentration (ppm by volume, dry basis) corrected to 15 percent O_2. Compliance with the concentrations corrected to 15 percent O_2 as submitted in the air quality permit application and/or set as an allowable in the permit will demonstrate compliance with the gm/hp-hr allowable. Use the following equations to correct the concentrations to 15 percent O_2.

$$ppm\ NO_{X\ @15\%O_2} = ppm\ NO_{X\ corrected}\left(\frac{5.9}{20.9 - O_2\%_{corrected}}\right)$$

$$ppm\ CO_{@15\%O_2} = ppm\ CO_{corrected}\left(\frac{5.9}{20.9 - O_2\%_{corrected}}\right)$$

10.1.1.2 Reciprocating Engines Above 500 Horsepower Not Equipped with Fuel Meters. If reciprocating engines above 500 horsepower (site-rated) are not equipped with fuel flow meters during the test, emissions shall be calculated using the site-rated horsepower and default specific fuel consumption factors, based on the higher heating value of the fuel, of 9,400 Btu/hp-hr for 4-cycle engines (controlled and uncontrolled) and 2-cycle lean burn engines and 11,000 Btu/hp-hr for 2-cycle uncontrolled (non-lean burn) engines. The following equations shall be used to calculate emissions.

$$gm/hp\text{ - }hr\ NO_X = (ppm\ NO_{X\ corrected})(1.19x10^{-7})(F\ Factor_{Note\ 1})(\frac{20.9}{20.9 - O_2\%_{corrected}})$$
$$(Specific\ Fuel\ Consumption_{Note\ 2})(10^{-6})(454)$$

$$lb/hr\ NO_X = \frac{(gm/hp\text{ - }hr\ NO_X)(Engine\ Horsepower_{Note\ 3})}{454}$$

$$gm/hp\text{ - }hr\ CO = (ppm\ CO_{corrected})(7.27x10^{-8})(F\ Factor_{Note\ 1})(\frac{20.9}{20.9 - O_2\%_{corrected}})$$
$$(Specific\ Fuel\ Consumption_{Note\ 2})(10^{-6})(454)$$

$$lb/hr\ CO = \frac{(gm/hp\text{ - }hr\ CO)(Engine\ Horsepower_{Note\ 3})}{454}$$

Note 1 - Use 8710 dscf/MMBtu unless calculated based on actual fuel gas composition and higher heating value of the fuel.

Note 2 - Default Specific Fuel Consumption (Btu/hp-hr) shall be as defined above for the particular type of engine tested.

Note 3 - Site-rated engine horsepower.

10.1.2 Reciprocating Engines Below 500 Horsepower. Reciprocating engines below 500 horsepower may calculate emission rates using the derived horsepower for the operating conditions during the portable analyzer test (either from engine parameter measurements or calculated from compressor operating parameters) and the manufacturer's specific fuel consumption based on the higher heating value of the fuel consumed during the test. Information showing the derivation of the engine operating horsepower and manufacturer's specific fuel consumption shall be provided with the test results. The following equations shall be used to calculate emission rates.

$$gm/hp\text{ - }hr\ NO_X = (ppm\ NO_{X\ corrected})(1.19x10^{-7})(F\ Factor_{Note\ 1})(\frac{20.9}{20.9 - O_2\%_{corrected}})$$
$$(Specific\ Fuel\ Consumption_{Note\ 2})(10^{-6})(454)$$

$$gm/hp\text{ - }hr\ CO = (ppm\ CO_{corrected})(7.27x10^{-8})(F\ Factor_{Note\ 1})(\frac{20.9}{20.9 - O_2\%_{corrected}})$$
$$(Specific\ Fuel\ Consumption_{Note\ 2})(10^{-6})(454)$$

Note 1 - Use 8710 dscf/MMBtu unless calculated based on actual fuel gas composition and the higher heating value of the fuel.

Note 2 - Use manufacturer's specific fuel consumption based on the higher heating value of the fuel and include manufacturer's data with the test results. If the manufacturer reports the specific fuel consumption based on the lower heating value of the fuel, multiply by 1.11 to obtain the specific fuel consumption based on the higher heating value of the fuel.

Pound per hour emission rates shall be calculated using the gram per horsepower hour emission rates and the engine horsepower derived from engine or compressor operating parameter data. If engine horsepower data is not available, site-rated horsepower shall be used to calculate pound

$$lb/hr\ NO_X = \frac{(gm/hp\text{ - }hr\ NO_X)(Engine\ Horsepower_{Note\ 1})}{(454)}$$
$$lb/hr\ CO = \frac{(gm/hp\text{ - }hr\ CO)(Engine\ Horsepower_{Note\ 1})}{(454)}$$

per hour emissions. The following equations shall be used to calculate emission rates.

Note 1 - Use derived operating horsepower and include derivation method/calculations with the test results. If a derived horsepower is not available or cannot be obtained, use site-rated horsepower.

10.2 Emission Calculations for Heaters/Boilers. For heaters and boilers, pound per million Btu (lb/MMBtu) emission rates shall be calculated based on EPA Reference Method 19. The pound per million Btu emission rates shall be converted to pound per hour emission rates using heat input per hour (MMBtu/hr). The heat input per hour shall be calculated using the average hourly fuel usage rate during test and the higher heating value of the fuel consumed or the permitted maximum heat input per hour for the boiler or heater. If a fuel meter is used to obtain heat input per hour data, the fuel meter shall be maintained and calibrated according to the manufacturer's recommendations. Records of all maintenance and calibrations shall be kept for five years. As an alternative, EPA Reference Methods 1-4 may be used to obtain a stack volumetric flow rate. The following equations shall be used to calculate emission rates.

$$lb/MMBtu\ NO_X = (ppm\ NO_{X\ corrected})(1.19x10^{-7})(F\ Factor_{Note\ 1})(\frac{20.9}{20.9 - O_2\%_{corrected}})$$

$$lb/MMBtu\ CO = (ppm\ CO_{corrected})(7.27x10^{-8})(F\ Factor_{Note\ 1})(\frac{20.9}{20.9 - O_2\%_{corrected}})$$

$$lb/hr\ NO_X = (lb/MMBtu\ NO_X)(Heat\ Input_{Note\ 2})$$

$$lb/hr\ CO = (lb/MMBtu\ CO)(Heat\ Input_{Note\ 2})$$

Note 1 - Use 8710 dscf/MMBtu unless calculated based on actual fuel gas composition and the higher heating value of the fuel.

Note 2 - Heat input shall be based on the average hourly fuel usage rate during the test and the higher heating value of the fuel consumed if the boiler/heater is equipped with a fuel meter or the permitted maximum heat input if a fuel meter is not available.

11. REPORTING REQUIREMENTS AND RECORD KEEPING REQUIREMENTS

Test reports shall be submitted to the Air Quality Division within thirty (30) days of completing the test unless a specific reporting schedule is set by a condition of a permit. A separate test report shall be submitted for each emission source tested and, at a minimum, the following information shall be included:

- **Form A, Linearity Check Data Sheet,** Submit the linearity check as required by Section 6.2 for the nominal range tested.
- **Form B, Stability Check Data Sheet,** Submit the stability check as required by Section 6.4 for the nominal range tested.
- **Form C, Calibration Error Check Data Sheet**
- **Form D-1, D-2 or D-3,** Submit the appropriate test results form for type of source tested.
- If the manufacturer's specific fuel consumption is used, documentation from the manufacturer shall be submitted.
- If the horsepower is calculated during the test, information showing the derivation of the horsepower shall be included.

For sources subject to Section 30 of the Wyoming Air Quality Standards and Regulations, the submittal must be certified as truthful, accurate and complete by the facility's responsible official.

Records pertaining to the information above and supporting documentation shall be kept for five (5) years and made available upon request by this Division. Additionally, if the source is equipped with a fuel meter, records of all maintenance and calibrations of the fuel meter shall be kept for five (5) years from the date of the last maintenance or calibration.

FIGURE 1.
CALIBRATION SYSTEM SCHEMATIC

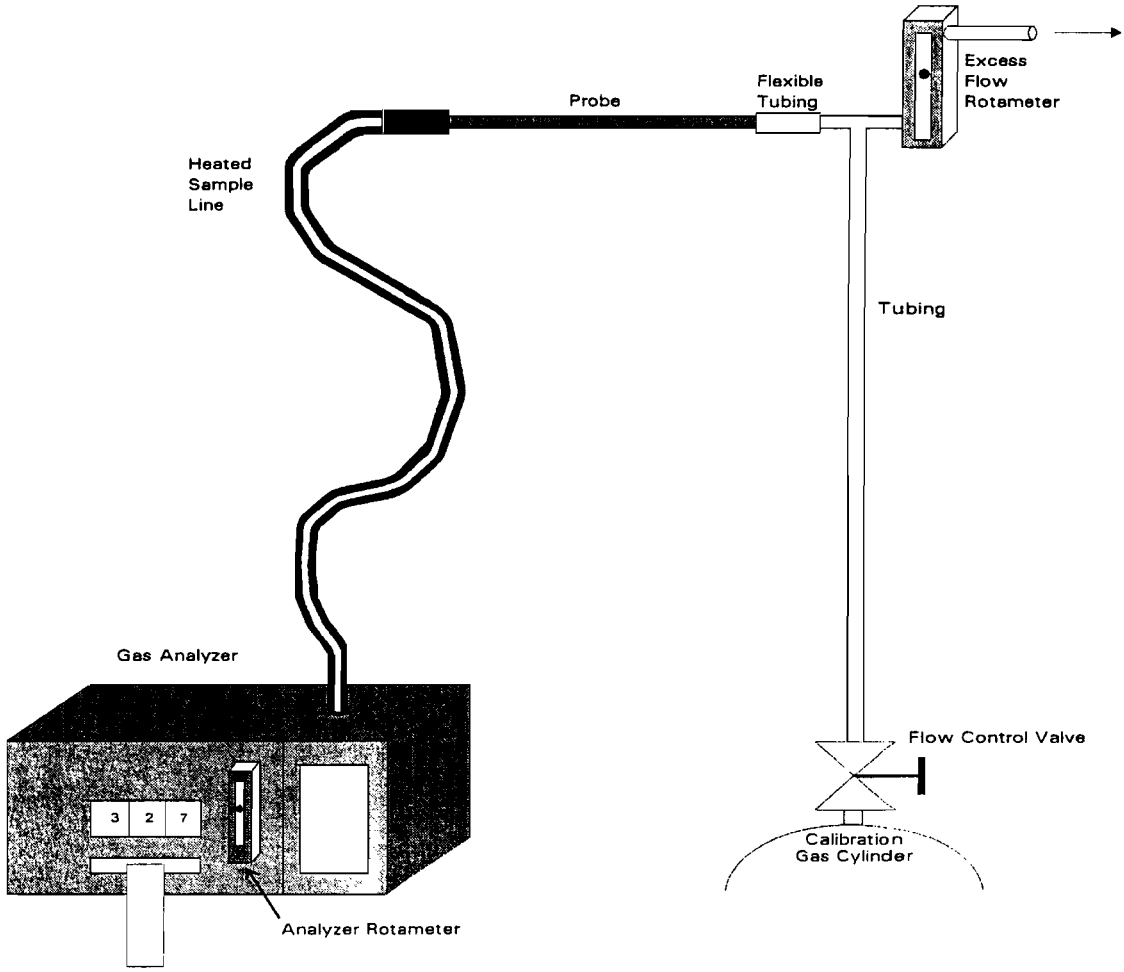

Form A

Linearity Check Data Sheet

Date:_____

Analyst:_____

Analyzer Manufacturer/Model #:_____

Analyzer Serial #:_____

LINEARITY CHECK									
Pollutant		**Calibration Gas Concentration (Indicate Units)**	**Analyzer Response ppm NO**	**Analyzer Response ppm NO_2**	**Analyzer Response ppm CO**	**Analyzer Response % O_2**	**Absolute Difference (Indicate Units)**	**Percent of Span**	**Linearity Valid (Yes or No)**
NO	**Zero**								
	Mid								
	Span								
NO_2	**Zero**								
	Mid								
	Span								
CO	**Zero**								
	Mid								
	Span								
O_2	**Zero**								
	Mid								
	Span								

Form B
Stability Check Data Sheet

Date:_____ **Analyst:**_____

Analyzer Manufacturer/Model #:_____

Analyzer Serial #:_____

Pollutant: NO, NO_2, CO (Circle One) **Span Gas Concentration (ppm):**_____

STABILITY CHECK					
Elapsed Time (Minutes)	Analyzer Response	Elapsed Time (Continued)	Analyzer Response	Elapsed Time (Continued)	Analyzer Response
1		17		33	
2		18		34	
3		19		35	
4		20		36	
5		21		37	
6		22		38	
7		23		39	
8		24		40	
9		25		41	
10		26		42	
11		27		43	
12		28		44	
13		29		45	
14		30		46	
15		31		47	
16		32		48	

For 30-minute Stability Check Period:

Maximum Concentration (ppm): _____ **Minimum Concentration (ppm):** _____

For 15-minute Stability Check Period:

Maximum Concentration (ppm): _____ **Minimum Concentration (ppm):** _____

Maximum Deviation = 100*(Max. Conc. - Min. Conc.)/Span Gas Conc. = _____ **percent**

Stability Time (minutes): _____

Form C
Calibration Error Check Data Sheet

Company:_____ **Facility:**_____

Source Tested:_____ **Date:**_____

Analyst:_____ **Analyzer Serial #:**_____

Analyzer Manufacturer/Model #:_____

PRETEST CALIBRATION ERROR CHECK								
			A	B	|A-B|	|A-B|/SG*100		
		Pump Flow Rate (Indicate Units)	Analyzer Reading (Indicate Units)	Calibration Gas Concentration (Indicate Units)	Absolute Difference (Indicate Units)	Percent of Span Note 1	Calibration Valid (Yes or No)	Response Time (Minutes)
NO	Zero							
	Span							
NO_2	Zero							
	Span							
CO	Zero							
	Span							
O_2	Zero							
	Span							
		Pretest Calibration NO Cell Temperature (°F):						

SG = Span Gas

POST TEST CALIBRATION ERROR CHECK										
			A	B	|A-B|	|A-B|/SG*100			Interference Check	
		Pump Flow Rate (Indicate Units)	Analyzer Reading (Indicate Units)	Calibration Gas Concentration (Indicate Units)	Absolute Difference (Indicate Units)	Percent of Span Note 1	Calibration Valid (Yes or No)	Average of Pretest and Post Test Analyzer Readings (Indicate Units)	NO Monitor Response (ppm)	CO Monitor Response (ppm)
NO	Zero									
	Span									
NO_2	Zero									
	Span									
CO	Zero									
	Span									
O_2	Zero									
	Span									
		Post Test Calibration NO Cell Temperature (°F):								
		CO Interference Response (I_{CO}, %):				NO Interference Response (I_{NO}, %):				

SG= Span Gas

Note 1: The percent of span calculation is applicable to the NO, NO_2 and CO channels only.

Form D-1
Reciprocating Engine Test Results

Company:_____ **Facility:**_____

Source Tested:_____ **Date:**_____

Source Manufacturer/Model #:_____

Site-rated Horsepower:_____ **Source Serial #:**_____

Type of Emission Control:_____

Analyst:_____ **Analyzer Serial #:**_____

Analyzer Manufacturer/Model #:_____

Operating Conditions

Source operating at 90 percent or greater site-rated horsepower during testing? yes no

Suction/ Discharge Pressures (Indicate Units)	Engine RPM	Engine Gas Throughput (Indicate Units)	Engine Fuel Consumption (Indicate Units)	Fuel Heat Content (Btu/cf)	Engine Specific Fuel Consumption (Btu/hp-hr)[1]	Engine Tested Horsepower

[1] As reported by the Manufacturer

Test Results

Test Start Time:_____ NO Cell Temperature (°F) after 1/3 (e.g., 7 minutes) of the test:_____

Test End Time:_____ NO Cell Temperature (°F) after 2/3 (e.g., 14 minutes) of the test:_____

NO_X ($NO + NO_2$)								
Avg. Tested NO ppm	$NO_{corrected}$ ppm	Avg. Tested NO_2 ppm	$NO_{2\ corrected}$ ppm	$NO_{X\ corrected}$ ppm	Tested gm/hp-hr	Tested lb/hr	Allowable gm/hp-hr	Allowable lb/hr

O_2		CO					
Avg. Tested O_2 %	$O_{2\ corrected}$ %	Avg. Tested CO ppm	$CO_{corrected}$ ppm	Tested gm/hp-hr	Tested lb/hr	Allowable gm/hp-hr	Allowable lb/hr

I certify to the best of my knowledge the test results are accurate and representative of the emissions from this source.

_____ _____

Print Name **Signature**

Form D-2
Combustion Turbine Test Results

Company:_____ **Facility:**_____

Source Tested:_____ **Date:**_____

Source Manufacturer/Model #:_____

Site-rated Horsepower:_____ **Source Serial #:**_____

Type of Emission Control:_____

Analyst:_____ **Analyzer Serial #:**_____

Analyzer Manufacturer/Model #:_____

Operating Conditions

Source operating at 90 percent or greater site-rated horsepower during testing? yes no

Suction/ Discharge Pressures (Indicate Units)	Turbine T_5 Temperature (°F)	Turbine RPM	Turbine Gas Throughput (Indicate Units)	Turbine Fuel Consumption (Indicate Units)	Fuel Heat Content (Btu/cf)	Turbine Specific Fuel Consumption (Btu/hp-hr)[1]	Turbine Tested Horsepower

[1] As reported by the Manufacturer

Test Results

Test Start Time:_____ NO Cell Temperature (°F) after 1/3 (e.g., 7 minutes) of the test:_____

Test End Time: _____ NO Cell Temperature (°F) after 2/3 (e.g., 14 minutes) of the test:_____

NO_X ($NO + NO_2$)										
Avg. Tested NO ppm	$NO_{corrected}$ ppm	Avg. Tested NO_2 ppm	$NO_{2\ corrected}$ ppm	$NO_{X\ corrected}$ ppm	Tested gm/hp-hr	Tested lb/hr	Tested ppm @ 15% O2	Allowable gm/hp-hr	Allowable lb/hr	Allowable ppm @ 15% O2

O_2		CO							
Avg. Tested O_2 %	$O_{2\ corrected}$ %	Avg. Tested CO ppm	$CO_{corrected}$ ppm	Tested gm/hp-hr	Tested lb/hr	Tested ppm @ 15% O2	Allowable gm/hp-hr	Allowable lb/hr	Allowable ppm @ 15% O2

I certify to the best of my knowledge the test results are accurate and representative of the emissions from this source.

_____ _____

Print Name **Signature**

Form D-3
Heater/Boiler Test Results

Company:_____ **Facility:**_____

Source Tested:_____ **Date:**_____

Source Manufacturer/Model #:_____

Design Firing Rate (MMBtu/hr):_____ **Source Serial #:**_____

Type of Emission Control:_____

Analyst:_____ **Analyzer Serial #:**_____

Analyzer Manufacturer/Model #:_____

Operating Conditions

Source operating at 90 percent or greater site-rated horsepower during testing? yes no

Fuel Consumption (cf/hr)	Fuel Heat Content (Btu/cf)	Heater/Boiler Tested Firing Rate (MMBtu/hr)

Test Results

Test Start Time:_____ NO Cell Temperature (°F) after 1/3 (e.g., 7 minutes) of the test:_____

Test End Time: _____ NO Cell Temperature (°F) after 2/3 (e.g., 14 minutes) of the test:_____

NO_X ($NO + NO_2$)								
Avg. Tested NO ppm	$NO_{corrected}$ ppm	Avg. Tested NO_2 ppm	$NO_{2\ corrected}$ ppm	$NO_{X\ corrected}$ ppm	Tested lb/MMBtu	Tested lb/hr	Allowable lb/MMBtu	Allowable lb/hr

O_2		CO					
Avg. Tested O_2 %	$O_{2\ corrected}$ %	Avg. Tested CO ppm	$CO_{corrected}$ ppm	Tested lb/MMBtu	Tested lb/hr	Allowable lb/MMBtu	Allowable lb/hr

I certify to the best of my knowledge the test results are accurate and representative of the emissions from this source.

_____ _____

Print Name **Signature**

APPENDIX P (Modified July 24, 2006)

40 CFR 63 SUBPART EEEE

Subpart EEEE--National Emission Standards for Hazardous Air Pollutants: Organic Liquids Distribution (Non-Gasoline)

What This Subpart Covers

63.2330 What is the purpose of this subpart?

63.2334 Am I subject to this subpart?

63.2338 What parts of my plant does this subpart cover?

63.2342 When do I have to comply with this subpart?

Emission Limitations, Operating Limits, and Work Practice Standards

63.2346 What emission limitations, operating limits, and work practice standards must I meet?

General Compliance Requirements

63.2350 What are my general requirements for complying with this subpart?

Testing and Initial Compliance Requirements

63.2354 What performance tests, design evaluations, and performance evaluations must I conduct?

63.2358 By what date must I conduct performance tests or other initial compliance demonstrations?

63.2362 When must I conduct subsequent performance tests?

63.2366 What are my monitoring installation, operation, and maintenance requirements?

63.2370 How do I demonstrate initial compliance with the emission limitations, operating limits, and work practice standards?

Continuous Compliance Requirements

63.2374 When do I monitor and collect data to demonstrate continuous compliance and how do I use the collected data?

63.2378 How do I demonstrate continuous compliance with the emission limitations, operating limits, and work practice standards?

Notifications, Reports, and Records

63.2382 What notifications must I submit and when and what information should be submitted?

63.2386 What reports must I submit and when and what information is to be submitted in each?

63.2390 What records must I keep?

63.2394 In what form and how long must I keep my records?

Other Requirements and Information

63.2396 What compliance options do I have if part of my plant is subject to both this subpart and another subpart?

63.2398 What parts of the General Provisions apply to me?

63.2402 Who implements and enforces this subpart?

63.2406 What definitions apply to this subpart?

Tables and Appendices to Subpart EEEE of Part 63

Table 1 to Subpart EEEE of Part 63--Organic Hazardous Air Pollutants

Table 2 to Subpart EEEE of Part 63--Emission Limits

Table 3 to Subpart EEEE of Part 63--Operating Limits--High Throughput Transfer Racks

Table 4 to Subpart EEEE of Part 63--Work Practice Standards

Table 5 to Subpart EEEE of Part 63--Requirements for Performance Tests and Design Evaluations

Table 6 to Subpart EEEE of Part 63--Initial Compliance with Emission Limits

Table 7 to Subpart EEEE of Part 63--Initial Compliance with Work Practice Standards

Table 8 to Subpart EEEE of Part 63--Continuous Compliance with Emission Limits

Table 9 to Subpart EEEE of Part 63--Continuous Compliance with Operating Limits--High Throughput Transfer Racks

Table 10 to Subpart EEEE of Part 63--Continuous Compliance with Work Practice Standards

Table 11 to Subpart EEEE of Part 63--Requirements for Reports

Appendix A to Subpart EEEE of Part 63--Applicability of General Provisions to Subpart EEEE

§63.2330 What is the purpose of this subpart?

This subpart establishes national emission limitations, operating limits, and work practice standards for organic hazardous air pollutants (HAP) emitted from organic liquids distribution (OLD) (non-gasoline) operations at major sources of HAP emissions. This subpart also establishes requirements to demonstrate initial and continuous compliance with the emission limitations, operating limits, and work practice standards.

§63.2334 Am I subject to this subpart?

(a) Except as provided for in paragraphs (b) and (c) of this section, you are subject to this subpart if you own or operate an OLD operation that is located at, or is part of, a major source of HAP emissions. An OLD operation may occupy an entire plant site or be collocated with other industrial (e.g., manufacturing) operations at the same plant site.

(b) Organic liquid distribution operations located at research and development facilities, consistent with section 112(c)(7) of the Clean Air Act (CAA), are not subject to this subpart.

(c) Organic liquid distribution operations do not include the activities and equipment, including product loading racks, used to process, store, or transfer organic liquids at facilities listed in paragraph (c) (1) and (2) of this section.

(1) Oil and natural gas production field facilities, as the term "facility" is defined in §63.761 of subpart HH.

(2) Natural gas transmission and storage facilities, as the term "facility" is defined in §63.1271 of subpart HHH.

§63.2338 What parts of my plant does this subpart cover?

(a) This subpart applies to each new, reconstructed, or existing OLD operation affected source.

(b) Except as provided in paragraph (c) of this section, the affected source is the collection of activities and equipment used to distribute organic liquids into, out of, or within a facility that is a major source of HAP. The affected source is composed of:

(1) All storage tanks storing organic liquids.

(2) All transfer racks at which organic liquids are loaded into or unloaded out of transport vehicles and/or containers.

(3) All equipment leak components in organic liquids service that are associated with pipelines, except as provided in paragraph (c)(2) of this section, and with storage tanks and transfer racks storing, loading, or unloading organic liquids.

(4) All transport vehicles while they are loading or unloading organic liquids at transfer racks.

(c) The equipment listed in paragraphs (c)(1) through (4) of this section and used in the identified operations is excluded from the affected source.

(1) Storage tanks, transfer racks, and equipment leak components that are part of an affected source under another 40 CFR part 63 national emission standards for hazardous air pollutants regulation (NESHAP).

(2) Equipment leak components associated with pipelines that transfer organic liquids directly to or from storage tanks subject to another 40 CFR part 63 NESHAP or to or from non-tank process unit components (e.g., process reactors).

(3) Non-permanent storage tanks, transfer racks, and equipment leak components used in special situation distribution loading and unloading operations (such as maintenance or upset liquids management).

(4) Storage tanks, transfer racks, and equipment leak components used to conduct maintenance activities, such as stormwater management, liquid removal from tanks for inspections and maintenance, or changeovers to a different liquid stored in a storage tank.

(d) An affected source is a new affected source if you commenced construction of the affected source after April 2, 2002, and you meet the applicability criteria in §63.2334 at the time you commenced operation.

(e) An affected source is reconstructed if you meet the criteria for reconstruction as defined in §63.2.

(f) An affected source is existing if it is not new or reconstructed.

§63.2342 When do I have to comply with this subpart?

(a) If you have a new or reconstructed affected source, you must comply with this subpart according to the schedule identified in paragraph (a)(1) or (2) of this section, as applicable.

(1)(i) Except as provided in paragraph (a)(1)(ii) of this section, if you startup your new affected source on or before February 3, 2004 or if you reconstruct your affected source on or before February 3, 2004, you must comply with the emission limitations, operating limits, and work practice standards for new and reconstructed sources in this subpart no later than February 3, 2004.

(ii) For any emission source listed in paragraph §63.2338(b) at an affected source that commenced construction or reconstruction after April 2, 2002, but before February 3, 2004, that is required to be controlled based on the applicability criteria in this subpart, but:

(A) Would not have been required to be controlled based on the applicability criteria as proposed for this subpart, you must comply with the emission limitations, operating limits, and work practice standards for each such emission source based on the schedule found in paragraph (b) of this section or at startup, whichever is later; or

(B) Would have been subject to a less stringent degree of control requirement as proposed for this subpart, you must comply with the emission limitations, operating limits, and work practice standards in this subpart for each such emission source based on the schedule found in paragraph (b) of this section or at startup, whichever is later, and if you start up your affected new or reconstructed source before February 5, 2007, you must comply with the emission limitations, operating limits, and work practice standards for each such emission source as proposed for this subpart, until you are required to comply with the emission limitations, operating limits, and work practice standards in this subpart for each such emission source based on the schedule found in paragraph (b) of this section.

(2) If you commence construction of or reconstruct your affected source after February 3, 2004, you must comply with the emission limitations, operating limits, and work practice standards for new and reconstructed sources in this subpart upon startup of your affected source.

(b)(1) If you have an existing affected source, you must comply with the emission limitations, operating limits, and work practice standards for existing affected sources no later than February 5, 2007, except as provided in paragraph (b)(2) of this section.

(2) Floating roof storage tanks at existing affected sources must be in compliance with the work practice standards in Table 4 to this subpart, item 1, at all times after the next degassing and cleaning activity or within 10 years after February 3, 2004, whichever occurs first. If the first degassing and cleaning activity occurs during the 3 years following February 3, 2004, the compliance date is February 5, 2007.

(c) If you have an area source that does not commence reconstruction but increases its emissions or its potential to emit such that it becomes a major source of HAP emissions and an existing affected source subject to this subpart, you must be in compliance by 3 years after the area source becomes a major source.

(d) You must meet the notification requirements in §63.2382(a) according to the schedules in §63.2382(a) and (b)(1) through (3) and in subpart A of this part. Some of these notifications must be submitted before the compliance dates for the emission limitations, operating limits, and work practice standards in this subpart.

§63.2346 What emission limitations, operating limits, and work practice standards must I meet?

(a) Storage tanks. For each storage tank storing organic liquids that meets the tank capacity and liquid vapor pressure criteria for control in Table 2 to this subpart, items 1 through 5, you must comply with paragraph (a)(1), (2), or (3) of this section. For each storage tank storing organic liquids that meets the tank capacity and liquid vapor pressure criteria for control in Table 2 to this subpart, item 6, you must comply with paragraph (a)(1) of this section.

(1) Meet the emission limits specified in Table 2 to this subpart and comply with the applicable requirements specified in 40 CFR part 63, subpart SS, for meeting emission limits, except substitute the term "storage tank" at each occurrence of the term "storage vessel" in subpart SS.

(2) Route emissions to fuel gas systems or back into the process as specified in 40 CFR part 63, subpart SS.

(3) Comply with 40 CFR part 63, subpart WW (control level 2).

(b) Transfer racks. For each transfer rack that meets the facility-level organic liquid loading volume and transfer rack organic HAP content criteria for control in Table 2 to this subpart, items 7 through 9, you must comply with paragraph (b)(1), (2), or (3) of this section.

(1) Meet the emission limits specified in Table 2 to this subpart and comply with the applicable requirements for transfer racks specified in 40 CFR part 63, subpart SS, for meeting emission limits.

(2) Route emissions to fuel gas systems or back into the process as specified in 40 CFR part 63, subpart SS.

(3) Use a vapor balancing system that routes organic HAP vapors displaced from the loading of organic liquids into transport vehicles to the appropriate storage tank.

(c) Equipment leak components. For each pump, valve, and sampling connection that operates in organic liquids service for at least 300 hours per year, you must comply with the applicable requirements under 40 CFR part 63, subpart TT (control level 1), subpart UU (control level 2), or subpart H. Pumps, valves, and sampling connectors that are insulated to provide protection against persistent sub-freezing temperatures are subject to the "difficult to monitor" provisions in the applicable subpart selected by the owner or operator. This paragraph only applies if the affected source has at least one storage tank or transfer rack that meets the applicability criteria for control in Table 2 to this subpart.

(d) Transport vehicles. For each transport vehicle equipped with vapor collection equipment, you must comply with paragraph (d)(1) of this section. For each transport vehicle without vapor collection equipment, you must comply with paragraph (d)(2) of this section.

(1) Follow the steps in 40 CFR 60.502(e) to ensure that organic liquids are loaded only into vapor-tight transport vehicles and comply with the provisions in 40 CFR 60.502(f) through (i), except substitute the term "transport vehicle" at each occurrence of the term "tank truck" or "gasoline tank truck" in those paragraphs.

(2) Ensure that organic liquids are loaded only into transport vehicles that have a current certification in accordance with the U.S. Department of Transportation (DOT) pressure test requirements in 49 CFR part 180 for cargo tanks or 49 CFR 173.31 for tank cars.

(e) Operating limits. For each high throughput transfer rack, you must meet each operating limit in Table 3 to this subpart for each control device used to comply with the provisions of this subpart whenever emissions from organic liquids are routed to the control device. For each storage tank and low throughput transfer rack, you must comply with the requirements for monitored parameters as specified in subpart SS of this part for storage vessels and low throughput transfer racks, respectively. Alternatively, you may comply with the operating limits in Table 3 to this subpart.

(f) If you elect to demonstrate compliance with a percent reduction requirement in Table 2 to this subpart using total organic compounds (TOC) rather than organic HAP, you must first demonstrate, subject to approval of the Administrator, that TOC is an appropriate surrogate for organic HAP in your case; that is, for your storage tank(s) and/or transfer rack(s), the percent destruction of organic HAP is equal to or higher than the percent destruction of TOC. This demonstration must be conducted prior to or during the initial compliance test.

(g) As provided in §63.6(g), you may request approval from the Administrator to use an alternative to the emission limitations,

operating limits, and work practice standards in this section. You must follow the procedures in §63.177(b) through (e) in applying for permission to use such an alternative. If you apply for permission to use an alternative to the emission limitations, operating limits, and work practice standards in this section, you must submit the information described in §63.6(g)(2).

(h) Emission sources that are part of the affected source as specified in §63.2338, but which are not subject to the provisions of paragraphs (a) through (d) of this section, are only subject to the requirements specified in §63.2386(d).

(i) Opening of a safety device is allowed at any time that it is required to avoid unsafe operating conditions.

(j) If you elect to comply with this subpart by combining emissions from different emission sources subject to this subpart in a single control device, then you must comply with the provisions specified in §63.982(f).

§63.2350 What are my general requirements for complying with this subpart?

(a) You must be in compliance with the emission limitations, operating limits, and work practice standards in this subpart at all times when the equipment identified in §63.2338(b)(1) through (4) is in OLD operation.

(b) You must always operate and maintain your affected source, including air pollution control and monitoring equipment, according to the provisions in §63.6(e)(1)(i).

(c) You must develop and implement a written startup, shutdown, and malfunction (SSM) plan according to the provisions in §63.6(e)(3).

§63.2354 What performance tests, design evaluations, and performance evaluations must I conduct?

(a)(1) For each performance test that you conduct, you must use the procedures specified in subpart SS of this part and the provisions specified in paragraph (b) of this section.

(2) For each design evaluation you conduct, you must use the procedures specified in subpart SS of this part.

(3) For each performance evaluation of each continuous monitoring system (CMS) you conduct, you must follow the requirements in §63.8(e).

(b)(1) For nonflare control devices, you must conduct each performance test according to the requirements in §63.7(e)(1), and either §63.988(b), §63.990(b), or §63.995(b), using the procedures specified in §63.997(e).

(2) You must conduct three separate test runs for each performance test on a nonflare control device as specified in§§63.7(e)(3) and 63.997(e)(1)(v). Each test run must last at least 1 hour, except as provided in §63.997(e)(1)(v)(A) and (B).

(3)(i) In addition to EPA Method 25 or 25A of 40 CFR part 60, appendix A, to determine compliance with the organic HAP or TOC emission limit, you may use EPA Method 18 of 40 CFR part 60, appendix A. If you use EPA Method 18 to measure compliance with the percentage efficiency limit, you must first determine which organic HAP are present in the inlet gas stream (i.e., uncontrolled emissions) using knowledge of the organic liquids or the screening procedure described in EPA Method 18. In conducting the performance test, you must analyze samples collected as specified in EPA Method 18, simultaneously at the inlet and outlet of the control device. Quantify the emissions for the same organic HAP identified as present in the inlet gas stream for both the inlet and outlet gas streams of the control device.

(ii) If you use EPA Method 18 of 40 CFR part 60, appendix A, to measure compliance with the emission concentration limit, you must first determine which organic HAP are present in the inlet gas stream using knowledge of the organic liquids or the screening procedure described in EPA Method 18. In conducting the performance test, analyze samples collected as specified in EPA Method 18 at the outlet of the control device. Quantify the control device outlet emission concentration for the same organic HAP identified as present in the inlet or uncontrolled gas stream.

(4) If a principal component of the uncontrolled or inlet gas stream to the control device is formaldehyde, you may use EPA Method 316 of appendix A of this part instead of EPA Method 18 of 40 CFR part 60, appendix A, for measuring the formaldehyde. If formaldehyde is the predominant organic HAP in the inlet gas stream, you may use EPA Method 316 alone to measure formaldehyde either at the inlet and outlet of the control device using the formaldehyde control efficiency as a surrogate for total organic HAP or TOC efficiency, or at the outlet of a combustion device for determining compliance with the emission concentration limit.

(5) You may not conduct performance tests during periods of SSM, as specified in §63.7(e)(1).

(c) To determine the HAP content of the organic liquid, you may use EPA Method 311 of 40 CFR part 63, appendix A, or other method approved by the Administrator. In addition, you may use other means, such as voluntary consensus standards, material safety data sheets (MSDS), or certified product data sheets, to determine the HAP content of the organic liquid. If the method you select to determine the HAP content provides HAP content ranges, you must use the upper end of each HAP content range in determining the total HAP content of the organic liquid. The EPA may require you to test the HAP content of an organic liquid using EPA Method 311 or other method approved by the Administrator. If the results of the EPA Method 311 (or any other approved method) are different from the HAP content determined by another means, the EPA Method 311 (or approved method) results will govern.

§63.2358 By what date must I conduct performance tests and other initial compliance demonstrations?

(a) You must conduct initial performance tests and design evaluations according to the schedule in §63.7(a)(2), or by the compliance date specified in any applicable State or Federal new source review construction permit to which the affected source is already subject, whichever is earlier.

(b)(1) For storage tanks and transfer racks at existing affected sources complying with the emission limitations listed in Table 2 to this subpart, you must demonstrate initial compliance with the emission limitations within 180 days after February 5, 2007.

(2) For storage tanks and transfer racks at reconstructed or new affected sources complying with the emission limitations listed in Table 2 to this subpart, you must conduct your initial compliance demonstration with the emission limitations within 180 days after the initial startup date for the affected source or February 3, 2004, whichever is later.

(c)(1) For storage tanks at existing affected sources complying with the work practice standard in Table 4 to this subpart, you must conduct your initial compliance demonstration the next time the storage tank is emptied and degassed, but not later than 10 years after February 3, 2004.

(2) For transfer racks and equipment leak components at existing affected sources complying with the work practice standards in Table 4 to this subpart, you must conduct your initial compliance demonstration within 180 days after February 5, 2007.

(d) For storage tanks, transfer racks, and equipment leak components at reconstructed or new affected sources complying with the work practice standards in Table 4 to this subpart, you must conduct your initial compliance demonstration within 180 days after the initial startup date for the affected source.

§63.2362 When must I conduct subsequent performance tests?

(a) For nonflare control devices, you must conduct subsequent performance testing required in Table 5 to this subpart, item 1, at any time the EPA requests you to in accordance with section 114 of the CAA.

(b)(1) For each transport vehicle that you own that is equipped with vapor collection equipment and loads organic liquids at an affected transfer rack, you must perform the vapor tightness testing required in Table 5 to this subpart, item 2, on that transport vehicle at least once per year.

(2) For transport vehicles that you own that do not have vapor collection equipment, you must maintain current certification in accordance with the U.S. DOT pressure test requirements in 49 CFR part 180 for cargo tanks or 49 CFR 173.31 for tank cars.

§63.2366 What are my monitoring installation, operation, and maintenance requirements?

(a) You must install, operate, and maintain a CMS on each control device required in order to comply with this subpart. If you use a continuous parameter monitoring system (CPMS) (as defined in §63.981), you must comply with the applicable requirements for CPMS in subpart SS of this part for the control device being used. If you use a continuous emissions monitoring system (CEMS), you must comply with the requirements in §63.8.

(b) For nonflare control devices controlling storage tanks and low throughput transfer racks, you must submit a monitoring plan according to the requirements in subpart SS of this part for monitoring plans.

§63.2370 How do I demonstrate initial compliance with the emission limitations, operating limits, and work practice standards?

(a) You must demonstrate initial compliance with each emission limitation and work practice standard that applies to you as specified in Tables 6 and 7 to this subpart.

(b) You demonstrate initial compliance with the operating limits requirements specified in §63.2346(e) by establishing the operating limits during the initial performance test or design evaluation.

(c) You must submit the results of the initial compliance demonstration in the Notification of Compliance Status according to the requirements in §63.2382(b).

§63.2374 When do I monitor and collect data to demonstrate continuous compliance and how do I use the collected data?

(a) You must monitor and collect data according to subpart SS of this part and paragraphs (b) and (c) of this section.

(b) When using a control device to comply with this subpart, you must monitor continuously or collect data at all required intervals at all times that the emission source and control device are in OLD operation, except for CMS malfunctions (including any malfunction preventing the CMS from operating properly), associated repairs, and required quality assurance or control activities (including, as applicable, calibration checks and required zero and span adjustments).

(c) Do not use data recorded during CMS malfunctions, associated repairs, required quality assurance or control activities, or periods when emissions from organic liquids are not routed to the control device in data averages and calculations used to report emission or operating levels. Do not use such data in fulfilling a minimum data availability requirement, if applicable. You must use all of the data collected during all other periods, including periods of SSM, in assessing the operation of the control device.

§63.2378 How do I demonstrate continuous compliance with the emission limitations, operating limits, and work practice standards?

(a) You must demonstrate continuous compliance with each emission limitation, operating limit, and work practice standard in Tables 2 through 4 to this subpart that applies to you according to the methods specified in subpart SS of this part and in Tables 8 through 10 to this subpart, as applicable.

(b) You must follow the requirements in §63.6(e)(1) and (3) during periods of startup, shutdown, malfunction, or nonoperation of the affected source or any part thereof. In addition, the provisions of paragraphs (b)(1) through (3) of this section apply.

(1) The emission limitations in this subpart apply at all times except during periods of nonoperation of the affected source (or specific portion thereof) resulting in cessation of the emissions to which this subpart applies. The emission limitations of this subpart apply during periods of SSM, except as provided in paragraphs (b)(2) and (3) of this section. During periods of SSM, the owner or operator must follow the applicable provisions of the SSM plan required by §63.2350(c). However, if a SSM, or period of nonoperation of one portion of the affected source does not affect the ability of a particular emission source to comply with the emission limitations to which it is subject, then that emission source is still required to comply with the applicable emission limitations of this subpart during the startup, shutdown, malfunction, or period of nonoperation.

(2) The owner or operator must not shut down control devices or monitoring systems that are required or utilized for achieving compliance with this subpart during periods of SSM while emissions are being routed to such items of equipment if the shutdown would contravene requirements of this subpart applicable to such items of equipment. This paragraph (b)(2) does not apply if the item of equipment is malfunctioning. This paragraph (b)(2) also does not apply if the owner or operator shuts down the compliance equipment (other than monitoring systems) to avoid damage due to a contemporaneous SSM of the affected source or portion thereof. If the owner or operator has reason to believe that monitoring equipment would be damaged due to a contemporaneous SSM of the affected source of portion thereof, the owner or operator must provide documentation supporting such a claim in the next Compliance report required in Table 11 to this subpart, item 1. Once approved by the Administrator, the provision for ceasing to collect, during a SSM, monitoring data that would otherwise be required by the provisions of this subpart must be incorporated into the SSM plan.

(3) During SSM, you must implement, to the extent reasonably available, measures to prevent or minimize excess emissions. For purposes of this paragraph (b)(3), the term "excess emissions" means emissions greater than those allowed by the emission limits that apply during normal operational periods. The measures to be taken must be identified in the SSM plan, and may include, but are not limited to, air pollution control technologies, recovery technologies, work practices, pollution prevention, monitoring, and/or changes in the manner of operation of the affected source. Back-up control devices are not required, but may be used if available.

(c) Periods of planned routine maintenance of a control device used to control storage tanks or transfer racks, during which the control device does not meet the emission limits in Table 2 to this subpart, must not exceed 240 hours per year.

(d) If you elect to route emissions from storage tanks or transfer racks to a fuel gas system or to a process, as allowed by §63.982(d), to comply with the emission limits in Table 2 to this subpart, the total aggregate amount of time during which the emissions bypass the fuel gas system or process during the calendar year without being routed to a control device, for all reasons (except SSM or product changeovers of flexible operation units and periods when a storage tank has been emptied and degassed), must not exceed 240 hours.

§63.2382 What notifications must I submit and when and what information should be submitted?

(a) You must submit each notification in subpart SS of this part, Table 12 to this subpart, and paragraphs (b) through (d) of this section that applies to you. You must submit these notifications according to the schedule in Table 12 to this subpart and as specified in paragraphs (b) through (d) of this section.

(b)(1) Initial Notification. If you startup your affected source before February 3, 2004, you must submit the Initial Notification no later than 120 calendar days after February 3, 2004.

(2) If you startup your new or reconstructed affected source on or after February 3, 2004, you must submit the Initial Notification no later than 120 days after initial startup.

(c) If you are required to conduct a performance test, you must submit the Notification of Intent to conduct the test at least 60 calendar days before it is initially scheduled to begin as required in §63.7(b)(1).

(d)(1) Notification of Compliance Status. If you are required to conduct a performance test, design evaluation, or other initial compliance demonstration as specified in Table 5, 6, or 7 to this subpart, you must submit a Notification of Compliance Status.

(2) The Notification of Compliance Status must include the information required in §63.999(b) and in paragraphs (d)(2)(i) through (viii) of this section.

(i) The results of any applicability determinations, emission calculations, or analyses used to identify and quantify organic HAP emissions from the affected source.

(ii) The results of emissions profiles, performance tests, engineering analyses, design evaluations, flare compliance assessments, inspections and repairs, and

calculations used to demonstrate initial compliance according to Tables 6 and 7 to this subpart. For performance tests, results must include descriptions of sampling and analysis procedures and quality assurance procedures.

(iii) Descriptions of monitoring devices, monitoring frequencies, and the operating limits established during the initial compliance demonstrations, including data and calculations to support the levels you establish.

(iv) Listing of all operating scenarios.

(v) Descriptions of worst-case operating and/or testing conditions for the control device(s).

(vi) Identification of emission sources subject to overlapping requirements described in §63.2396 and the authority under which you will comply.

(vii) The applicable information specified in §63.1039(a)(1) through (3) for all pumps and valves subject to the work practice standards for equipment leak components in Table 4 to this subpart, item 3.

(viii) If you are complying with the vapor balancing work practice standard for transfer racks according to Table 4 to this subpart, item 2.a, include a statement to that effect, and a statement that the pressure vent settings on the affected storage tanks are greater than or equal to 2.5 pounds per square inch gauge (psig).

§63.2386 What reports must I submit and when and what information is to be submitted in each?

(a) You must submit each report in subpart SS of this part, Table 11 to this subpart, Table 12 to this subpart, and in paragraphs (c) through (e) of this section that applies to you.

(b) Unless the Administrator has approved a different schedule for submission of reports under §63.10(a), you must submit each report according to Table 11 to this subpart and by the dates shown in paragraphs (b)(1) through (3) of this section, by the dates shown in subpart SS of this part, and by the dates shown in Table 12 to this subpart, whichever are applicable.

(1)(i) The first Compliance report must cover the period beginning on the compliance date that is specified for your affected source in §63.2342 and ending on June 30 or December 31, whichever date is the first date following the end of the first calendar half after the compliance date that is specified for your affected source in §63.2342.

(ii) The first Compliance report must be postmarked no later than July 31 or January 31, whichever date follows the end of the first calendar half after the compliance date that is specified for your affected source in §63.2342.

(2)(i) Each subsequent Compliance report must cover the semiannual reporting period from January 1 through June 30 or the semiannual reporting period from July 1 through December 31.

(ii) Each subsequent Compliance report must be postmarked no later than July 31 or January 31, whichever date is the first date following the end of the semiannual reporting period.

(3) For each affected source that is subject to permitting regulations pursuant to 40 CFR part 70 or 40 CFR part 71, if the permitting authority has established dates for submitting semiannual reports pursuant to 40 CFR 70.6(a)(3)(iii)(A) or 71.6(a)(3)(iii)(A), you may submit the first and subsequent Compliance reports according to the dates the permitting authority has established instead of according to the dates in paragraphs (b)(1) through (4) of this section.

(c) First Compliance report. The first Compliance report must contain the information specified in paragraphs (c)(1) through (10) of this section.

(1) Company name and address.

(2) Statement by a responsible official, including the official's name, title, and signature, certifying that, based on information and belief formed after reasonable inquiry, the statements and information in the report are true, accurate, and complete.

(3) Date of report and beginning and ending dates of the reporting period.

(4) Any changes to the information listed in §63.2382(d)(1) that have occurred since the submittal of the Notification of Compliance Status.

(5) If you had a SSM during the reporting period and you took actions consistent with your SSM plan, the Compliance report must include the information described in §63.10(d)(5)(i).

(6) If there are no deviations from any emission limitation or operating limit that applies to you and there are no deviations from the requirements for work practice standards, a statement that there were no deviations from the emission limitations, operating limits, or work practice standards during the reporting period.

(7) If there were no periods during which the CMS was out of control as specified in §63.8(c)(7), a statement that there were no periods during which the CMS was out of control during the reporting period.

(8) For closed vent systems and control devices used to control emissions, the information specified in paragraphs (c)(8)(i) and (ii) of this section for those planned routine maintenance activities that would require the control device to not meet the applicable emission limit.

(i) A description of the planned routine maintenance that is anticipated to be performed for the control device during the next 6 months. This description must include the type of maintenance necessary, planned frequency of maintenance, and lengths of maintenance periods.

(ii) A description of the planned routine maintenance that was performed for the control device during the previous 6 months. This description must include the type of maintenance performed and the total number of hours during those 6 months that the control device did not meet the applicable emission limit due to planned routine maintenance.

(9) A listing of all emission sources that are part of the affected source but are not subject to any of the emission limitations, operating limits, or work practice standards of this subpart.

(10) A listing of all transport vehicles into which organic liquids were loaded at affected transfer racks during the previous 6 months for which vapor tightness documentation as required in §63.2390(d) was not on file at the facility.

(d) Subsequent Compliance reports. Subsequent Compliance reports must contain the information in paragraphs (c)(1) through (10) of this section and, where applicable, the information in paragraphs (d)(1) through (3) of this section.

(1) For each deviation from an emission limitation occurring at an affected source where you are using a CMS to comply with an emission limitation in this subpart, you must include in the Compliance report the applicable information in paragraphs (d)(1)(i) through (xii) of this section. This includes periods of SSM.

(i) The date and time that each malfunction started and stopped.

(ii) The dates and times that each CMS was inoperative, except for zero (low-level) and high-level checks.

(iii) For each CMS that was out of control, the information in §63.8(c)(8).

(iv) The date and time that each deviation started and stopped, and whether each deviation occurred during a period of SSM, or during another period.

(v) A summary of the total duration of the deviations during the reporting period, and the total duration as a percentage of the total emission source operating time during that reporting period.

(vi) A breakdown of the total duration of the deviations during the reporting period into those that are due to startup, shutdown, control equipment problems, process problems, other known causes, and other unknown causes.

(vii) A summary of the total duration of CMS downtime during the reporting period, and the total duration of CMS downtime as a percentage of the total emission source operating time during that reporting period.

(viii) An identification of each organic HAP that was potentially emitted during each deviation based on the known organic HAP contained in the liquid(s).

(ix) A brief description of the emission source(s) at which the CMS deviation(s) occurred.

(x) A brief description of each CMS that was out of control during the period.

(xi) The date of the latest certification or audit for each CMS.

(xii) A brief description of any changes in CMS, processes, or controls since the last reporting period.

(2) Include in the Compliance report the information in paragraphs (d)(2)(i) through (iii) of this section, as applicable.

(i) For each storage tank and transfer rack subject to control requirements, include periods of planned routine maintenance during which the control device did not comply with the applicable emission limits in Table 2 to this subpart.

(ii) For each storage tank controlled with a floating roof, include a copy of the inspection record (required in §63.1065(b)) when inspection failures occur.

(iii) If you elect to use an extension for a floating roof inspection in accordance with §63.1063(c)(2)(iv)(B) or (e)(2), include the documentation required by those paragraphs.

(3) Include in the Compliance report each new operating scenario which has occurred since the time period covered by the last Compliance report. For each new operating scenario, you must provide verification that the established operating conditions for any associated control device have not been exceeded and that any required calculations and engineering analyses have been performed.

(e) Each affected source that has obtained a title V operating permit pursuant to 40 CFR part 70 or 40 CFR part 71 must report all deviations as defined in this subpart in the semiannual monitoring report required by 40 CFR 70.6(a)(3)(iii)(A) or 71.6(a)(3)(iii)(A). If an affected source submits a Compliance report pursuant to Table 11 to this subpart along with, or as part of, the semiannual monitoring report required by 40 CFR 70.6(a)(3)(iii)(A) or 71.6(a)(3)(iii)(A), and the Compliance report includes all required information concerning deviations from any emission limitation in this subpart, we will consider submission of the Compliance report as satisfying any obligation to report the same deviations in the semiannual monitoring report. However, submission of a Compliance report will not otherwise affect any obligation the affected source may have to report deviations from permit requirements to the applicable title V permitting authority.

§63.2390 What records must I keep?

(a) You must keep all records identified in subpart SS of this part and in Table 12 to this subpart that are applicable, including records related to notifications and reports, SSM, performance tests, CMS, and performance evaluation plans.

(b) You must keep the records required to show continuous compliance, as required in subpart SS of this part and in Tables 8 through 10 to this subpart, with each emission limitation, operating limit, and work practice standard that applies to you.

(c) For each transport vehicle into which organic liquids are loaded at an affected transfer rack, you must keep the applicable records in paragraphs (c)(1) and (2) of this section.

(1) For transport vehicles equipped with vapor collection equipment, the documentation described in 40 CFR 60.505(b), except that the test title is: Transport Vehicle Pressure Test-EPA Reference Method 27.

(2) For transport vehicles without vapor collection equipment, current certification in accordance with the U.S. DOT pressure test requirements in 49 CFR part 180 for cargo tanks or 49 CFR 173.31 for tank cars.

(3) You must keep records of the actual annual facility-level organic liquid loading volume through transfer racks out of the facility to document the applicability of the emission limitations in Table 2, items 7 through 10, to this subpart.

§63.2394 In what form and how long must I keep my records?

(a) Your records must be in a form suitable and readily available for expeditious inspection and review according to §63.10(b)(1). In addition, on-site records may be stored in electronic form at a separate location from the site provided they can be accessed and printed at the site within 1 hour after a request by the applicable title V permitting authority.

(b) As specified in §63.10(b)(1), you must keep your files of all information (including all reports and notifications) for at least 5 years following the date of each occurrence, measurement, maintenance, corrective action, report, or record.

(c) You must keep each record on site for at least 2 years after the date of each occurrence, measurement, maintenance, corrective action, report, or record, according to §63.10(b)(1). You may keep the records off site for the remaining 3 years.

§63.2396 What compliance options do I have if part of my plant is subject to both this subpart and another subpart?

(a) Compliance with other regulations for storage tanks.

(1)(i) After the compliance dates specified in §63.2342, if you have a storage tank that is subject to 40 CFR part 60, subpart Kb, not as the result of another 40 CFR part 63 subpart, and that storage tank is in OLD operation, you must meet all of the requirements of this subpart for that storage tank when the storage tank is in OLD operation.

(ii) If you have a storage tank that is in compliance with 40 CFR part 60, subpart Kb, as the result of complying with another 40 CFR part 63 subpart, that storage tank is not subject to this subpart.

(2) After the compliance dates specified in §63.2342, if you have a storage tank that is subject to 40 CFR part 61, subpart Y, and that storage tank is in OLD operation, you must meet all of the requirements of this subpart for that storage tank when the storage tank is in OLD operation.

(b) Compliance with other regulations for transfer racks. After the compliance dates specified in §63.2342, if you have a transfer rack that is subject to 40 CFR part 61, subpart BB, and that transfer rack is in OLD operation, you must meet the all of the requirements of this subpart for that transfer rack when the transfer rack is in OLD operation.

(c) Compliance with other regulations for equipment leak components.

(1) After the compliance dates specified in §63.2342, if you have pumps, valves, or sampling connections that are subject to a 40 CFR part 60 subpart, and those pumps, valves, and sampling connections are in OLD operation and in organic liquids service, as defined in this subpart, you must comply with the provisions of each subpart for those equipment leak components.

(2) After the compliance dates specified in §63.2342, if you have pumps, valves, or sampling connections subject to 40 CFR part 63, subpart GGG, and those pumps, valves, and sampling connections are in OLD operation and in organic liquids service, as defined in this subpart, you may elect to comply with the provisions of this subpart for all such equipment leak components. You must identify in the Notification of Compliance Status required by §63.2382(b) the provisions with which you will comply.

(d) [Reserved]

(e) Overlap with other regulations for monitoring, recordkeeping, or reporting with respect to control devices. After the compliance dates specified in §63.2342, if any control device subject to this subpart is also subject to monitoring, recordkeeping, and reporting requirements of another 40 CFR part 63 subpart, the owner or operator must be in compliance with the monitoring, recordkeeping, and reporting requirements of this subpart EEEE. If complying with the monitoring, recordkeeping, and reporting requirements of the other subpart satisfies the monitoring, recordkeeping, and reporting requirements of this subpart, the owner or operator may elect to continue to comply with the monitoring, recordkeeping, and reporting requirements of the other subpart. In such instances, the owner or operator will be deemed to be in compliance with the monitoring, recordkeeping, and reporting requirements of this subpart. The owner or operator must identify the other subpart being complied with in the Notification of Compliance Status required by §63.2382(b).

§63.2398 What parts of the General Provisions apply to me?

Table 12 to this subpart shows which parts of the General Provisions in §§63.1 through 63.15 apply to you.

§63.2402 Who implements and enforces this subpart?

(a) This subpart can be implemented and enforced by the U.S. Environmental Protection Agency (U.S. EPA) or a delegated authority such as your State, local, or eligible tribal agency. If the EPA Administrator has delegated authority to your State, local, or eligible tribal agency, then that agency, as well as the EPA, has the authority to implement and enforce this subpart. You should contact your EPA Regional Office (see list in §63.13) to find out if this subpart is delegated to your State, local, or eligible tribal agency.

(b) In delegating implementation and enforcement authority for this subpart to a State, local, or eligible tribal agency under 40 CFR part 63, subpart E, the authorities contained in paragraphs (b)(1) through (4) of this section are retained by the EPA Administrator and are not delegated to the State, local, or eligible tribal agency.

(1) Approval of alternatives to the nonopacity emission limitations, operating limits, and work practice standards in §63.2346(a) through (c) under §63.6(g).

(2) Approval of major alternatives to test methods under §63.7(e)(2)(ii) and (f) and as defined in §63.90.

(3) Approval of major alternatives to monitoring under §63.8(f) and as defined in §63.90.

(4) Approval of major alternatives to recordkeeping and reporting under §63.10(f) and as defined in §63.90.

§63.2406 What definitions apply to this subpart?

Terms used in this subpart are defined in the CAA, in §63.2, and in this section. If the same term is defined in another subpart and in this section, it will have the meaning given in this section for purposes of this subpart.

Actual annual average temperature, for organic liquids, means the temperature determined using the following methods:

(1) For heated or cooled storage tanks, use the calculated annual average temperature of the stored organic liquid as determined from a design analysis of the storage tank.

(2) For ambient temperature storage tanks:

(i) Use the annual average of the local (nearest) normal daily mean temperatures reported by the National Climatic Data Center; or

(ii) Use any other method that the EPA approves.

Annual average true vapor pressure means the equilibrium partial pressure exerted by the total organic HAP in the stored or transferred organic liquid. For the purpose of determining if a liquid meets the definition of an organic liquid, the vapor pressure is determined using standard conditions of 77 degrees F and 29.92 inches of mercury. For the purpose of determining whether an organic liquid meets the applicability criteria in Table 2, items 1 through 6, to this subpart, use the actual annual average temperature as defined in this subpart. The vapor pressure value in either of these cases is determined:

(1) In accordance with methods described in American Petroleum Institute Publication 2517, Evaporative Loss from External Floating-Roof Tanks (incorporated by reference, see §63.14);

(2) Using standard reference texts;

(3) By the American Society for Testing and Materials Method D2879-83, 96 (incorporated by reference, see §63.14); or

(4) Using any other method that the EPA approves.

Cargo tank means a liquid-carrying tank permanently attached and forming an integral part of a motor vehicle or truck trailer. This term also refers to the entire cargo tank motor vehicle or trailer. For the purpose of this subpart, vacuum trucks used exclusively for maintenance or spill response are not considered cargo tanks.

Closed vent system means a system that is not open to the atmosphere and is composed of piping, ductwork, connections, and, if necessary, flow-inducing devices that transport gas or vapors from an emission point to a control device. This system does not include the vapor collection system that is part of some transport vehicles or the loading arm or hose that is used for vapor return. For transfer racks, the closed vent system begins at, and includes, the first block valve on the downstream side of the loading arm or hose used to convey displaced vapors.

Combustion device means an individual unit of equipment, such as a flare, oxidizer, catalytic oxidizer, process heater, or boiler, used for the combustion of organic emissions.

Container means a portable unit in which a material can be stored, transported, treated, disposed of, or otherwise handled. Examples of containers include, but are not limited to, drums and portable cargo containers known as "portable tanks" or "totes."

Control device means any combustion device, recovery device, recapture device, or any combination of these devices used to comply with this subpart. Such equipment or devices include, but are not limited to, absorbers, adsorbers, condensers, and combustion devices. Primary condensers, steam strippers, and fuel gas systems are not considered control devices.

Crude oil means any of the naturally occurring liquids commonly referred to as crude oil, regardless of specific physical properties. Only those crude oils downstream of the first point of custody transfer after the production field are considered crude oils in this subpart.

Custody transfer means the transfer of hydrocarbon liquids after processing and/or treatment in the producing operations, or from storage tanks or automatic transfer facilities to pipelines or any other forms of transportation.

Design evaluation means a procedure for evaluating control devices that complies with the requirements in §63.985(b)(1)(i).

Deviation means any instance in which an affected source subject to this subpart, or portion thereof, or an owner or operator of such a source:

(1) Fails to meet any requirement or obligation established by this subpart including, but not limited to, any emission limitation (including any operating limit) or work practice standard;

(2) Fails to meet any term or condition that is adopted to implement an applicable requirement in this subpart, and that is included in the operating permit for any affected source required to obtain such a permit; or

(3) Fails to meet any emission limitation (including any operating limit) or work practice standard in this subpart during SSM.

Emission limitation means an emission limit, opacity limit, operating limit, or visible emission limit.

Equipment leak component means each pump, valve, and sampling connection system used in organic liquids service at an OLD operation. Valve types include control, globe, gate, plug, and ball. Relief and check valves are excluded.

Gasoline means any petroleum distillate or petroleum distillate/alcohol blend having a Reid vapor pressure of 27.6 kilopascals (4.0 pounds per square inch absolute (psia)) or greater which is used as a fuel for internal combustion engines. Aviation gasoline is included in this definition.

In organic liquids service means that an equipment leak component contains or contacts organic liquids having 5 percent by weight or greater of the organic HAP listed in Table 1 to this subpart.

On-site or on site means, with respect to records required to be maintained by this subpart or required by another subpart referenced by this subpart, that records are stored at a location within a major source which encompasses the affected source. On-site includes, but is not limited to, storage at the affected source to which the records pertain, storage in central files elsewhere at the major source, or electronically available at the site.

Organic liquid means:

(1) Any non-crude oil liquid or liquid mixture that contains 5 percent by weight or greater of the organic HAP listed in Table 1 to this subpart, as determined using the procedures specified in §63.2354(c).

(2) Any crude oils downstream of the first point of custody transfer.

(3) Organic liquids for purposes of this subpart do not include the following liquids:

(i) Gasoline (including aviation gasoline), kerosene (No. 1 distillate oil), diesel (No. 2 distillate oil), asphalt, and heavier distillate oils and fuel oils;

(ii) Any fuel consumed or dispensed on the plant site directly to users (such as fuels for fleet refueling or for refueling marine vessels that support the operation of the plant);

(iii) Hazardous waste;

(iv) Wastewater;

(v) Ballast water: or

(vi) Any non-crude oil liquid with an annual average true vapor pressure less than 0.7 kilopascals (0.1 psia).

Organic liquids distribution (OLD) operation means the combination of activities and equipment used to store or transfer organic liquids into, out of, or within a plant site regardless of the specific activity being performed. Activities include, but are not limited to, storage, transfer, blending, compounding, and packaging.

Permitting authority means one of the following:

(1) The State Air Pollution Control Agency, local agency, or other agency authorized by the EPA Administrator to carry out a permit program under 40 CFR part 70; or

(2) The EPA Administrator, in the case of EPA-implemented permit programs under title V of the CAA (42 U.S.C. 7661) and 40 CFR part 71

Plant site means all contiguous or adjoining surface property that is under common control, including surface properties that are separated only by a road or other public right-of-way. Common control includes surface properties that are owned, leased, or operated by the same entity, parent entity, subsidiary, or any combination.

Research and development facility means laboratory and pilot plant operations whose primary purpose is to conduct research and development into new processes and products, where the operations are under the close supervision of technically trained personnel, and which are not engaged in the manufacture of products for commercial sale, except in a de minimis manner.

Responsible official means responsible official as defined in 40 CFR 70.2 and 40 CFR 71.2, as applicable.

Safety device means a closure device such as a pressure relief valve, frangible disc, fusible plug, or any other type of device that functions exclusively to prevent physical damage or permanent deformation to a unit or its air emission control equipment by venting gases or vapors directly to the atmosphere during unsafe conditions resulting from an unplanned, accidental, or emergency event.

Shutdown means the cessation of operation of an OLD affected source, or portion thereof, required or used to comply with this subpart, or the emptying and degassing of a storage tank. Shutdown as defined here includes, but is not limited to, events that result from periodic maintenance, replacement of equipment, or repair.

Startup means the setting in operation of an OLD affected source, or portion thereof, for any purpose. Startup also includes the placing in operation of any individual piece of equipment required or used to comply with this subpart including, but not limited to, control devices and monitors.

Storage tank means a stationary unit that is constructed primarily of nonearthen materials (such as wood, concrete, steel, or reinforced plastic) that provide structural support and is designed to hold a bulk quantity of liquid. Storage tanks do not include:

(1) Units permanently attached to conveyances such as trucks, trailers, rail cars, barges, or ships;

(2) Pressure vessels designed to operate in excess of 204.9 kilopascals and without emissions to the atmosphere;

(3) Bottoms receiver tanks;

(4) Surge control vessels;

(5) Vessels storing wastewater; or

(6) Reactor vessels associated with a manufacturing process unit.

Tank car means a car designed to carry liquid freight by rail, and including a permanently attached tank.

Transfer rack means a single system used to load organic liquids into transport vehicles. It includes all loading arms, pumps, meters, shutoff valves, relief valves, and other piping and equipment necessary for the transfer operation. Transfer equipment and operations that are physically separate (i.e., do not share common piping, valves, and other equipment) are considered to be separate transfer racks.

Transport vehicle means a cargo tank or tank car.

Vapor balancing system means a piping system that collects organic HAP vapors displaced from transport vehicles during loading and routes the collected vapors to the storage tank from which the liquid being loaded originated or compresses the vapors for feeding into a chemical manufacturing process unit.

Vapor collection system means any equipment located at the source (i.e., at the OLD operation) that is not open to the atmosphere; that is composed of piping, connections, and, if necessary, flow-inducing devices; and that is used for containing and conveying vapors displaced during the loading of transport vehicles to a control device or for vapor balancing. This does not include any of the vapor collection equipment that is installed on the transport vehicle.

Vapor-tight transport vehicle means a transport vehicle that has been demonstrated to be vapor-tight. To be considered vapor-tight, a transport vehicle equipped with vapor collection equipment must undergo a pressure change of no more than 250 pascals (1 inch of water) within 5 minutes after it is pressurized to 4,500 pascals (18 inches of water). This capability must be demonstrated annually using the procedures specified in EPA Method 27 of 40 CFR part 60, appendix A. For all other transport vehicles, vapor tightness is demonstrated by performing the U.S. DOT pressure test procedures for tank cars and cargo tanks.

Work practice standard means any design, equipment, work practice, or operational standard, or combination thereof, that is promulgated pursuant to section 112(h) of the CAA.

Tables to Subpart EEEE of Part 63

You must use the organic HAP information listed in the following table to determine which of the liquids handled at your facility meet the HAP content criteria in the definition of Organic Liquid in §63.2406.

Table 1 to Subpart EEEE of Part 63.--Organic Hazardous Air Pollutants

Compound Name	CAS Number[a]
2,4-D salts and esters	94-75-7
Acetaldehyde	75-07-0
Acetonitrile	75-05-8
Acetophenone	98-86-2
Acrolein	107-02-8
Acrylamide	79-06-1
Acrylic acid	79-10-7
Acrylonitrile	107-13-1
Allyl chloride	107-05-1
Aniline	62-53-3
Benzene	71-43-2
Biphenyl	92-52-4
Butadiene (1,3-)	106-99-0
Carbon tetrachloride	56-23-5
Chlorine	7782-50-5
Chloroacetic acid	79-11-8
Chlorobenzene	108-90-7
2-Chloro-1,3-butadiene (Chloroprene)	126-99-8
Chloroform	67-66-3
m-Cresol	108-39-4
o-Cresol	95-48-7
p-Cresol	106-44-5
Cresols/cresylic acid	1319-77-3
Cumene	98-82-8
Dibenzofurans	132-64-9
Dibutylphthalate	84-74-2
Dichloroethane (1,2-) (Ethylene dichloride) (EDC)	107-06-2
Dichloropropene (1,3-)	542-75-6
Diethanolamine	111-42-2
Diethyl aniline (N,N-)	121-69-7
Diethylene glycol monobutyl ether	112-34-5
Diethylene glycol monomethyl ether	111-77-3
Diethyl sulfate	64-67-5
Dimethyl formamide	68-12-2
Dimethylhydrazine (1,1-)	57-14-7
Dioxane (1,4-) (1,4-Diethyleneoxide)	123-91-1
Epichlorohydrin (1-Chloro-2,3-epoxypropane)	106-89-8
Epoxybutane (1,2-)	106-88-7
Ethyl acrylate	140-88-5
Ethylbenzene	100-41-4
Ethyl chloride (Chloroethane)	75-00-3

Compound Name	CAS Number[a]
Ethylene dibromide (Dibromomethane)	106-93-4
Ethylene glycol	107-21-1
Ethylene glycol dimethyl ether	110-71-4
Ethylene glycol monomethyl ether	109-86-4
Ethylene glycol monomethyl ether acetate	110-49-6
Ethylene glycol monophenyl ether	122-99-6
Ethylene oxide	75-21-8
Ethylidene dichloride (1,1-Dichloroethane)	75-34-3
Formaldehyde	50-00-0
Hexachloroethane	67-72-1
Hexane	110-54-3
Hydrochloric acid	7647-01-0
Hydrazine	302-01-2
Hydrogen fluoride	7664-39-3
Hydroquinone	123-31-9
Isophorone	78-59-1
Maleic anhydride	108-31-6
Methanol	67-56-1
Methyl chloride (Chloromethane)	74-87-3
Methylene chloride (Dichloromethane)	75-09-2
Methylenedianiline (4,4'-)	101-77-9
Methylene diphenyl diisocyanate	101-68-8
Methyl ethyl ketone (2-Butanone) (MEK)	78-93-3
Methyl hydrazine	60-34-4
Methyl isobutyl ketone (Hexone) (MIBK)	108-10-1
Methyl methacrylate	80-62-6
Methyl tert-butyl ether (MTBE)	1634-04-4
Naphthalene	91-20-3
Nitrobenzene	98-95-3
Phenol	108-9-52
Phthalic anhydride	85-44-9
Polycyclic organic matter	50-32-8
Propionaldehyde	123-38-6
Propylene dichloride (1,2-Dichloropropane)	78-87-5
Propylene oxide	75-56-9
Quinoline	91-22-5
Styrene	100-42-5
Styrene oxide	96-09-3
Tetrachloroethane (1,1,2,2-)	79-34-5
Tetrachloroethylene (Perchloroethylene)	127-18-4
Titanium tetrachloride	7550-45-0

Compound Name	CAS Number[a]
Toluene	108-88-3
Toluene diisocyanate (2,4-)	584-84-9
o-Toluidine	95-53-4
Trichlorobenzene (1,2,4-)	120-82-1
Trichloroethane (1,1,1-) (Methyl chloroform)	71-55-6
Trichloroethane (1,1,2-) (Vinyl trichloride)	79-00-5
Trichloroethylene	79-01-6
Triethylamine	121-44-8
Trimethylpentane (2,2,4-)	540-84-1

Compound Name	CAS Number[a]
Vinyl acetate	108-05-4
Vinyl chloride (Chloroethylene)	75-01-4
Vinylidene chloride (1,1-Dichloroethylene)	75-35-4
Xylene (m-)	108-38-3
Xylene (o-)	95-47-6
Xylene (p-)	106-42-3
Xylenes (isomers and mixtures)	1330-20-7

1 CAS numbers refer to the Chemical Abstracts Services registry number assigned to specific compounds, isomers, or mixtures of compounds.

As stated in §63.2346, you must comply with the emission limits for the organic liquids distribution emission sources as follows:

TABLE 2 TO SUBPART EEEE OF PART 63.—EMISSION LIMITS

If you operate	And if	Then you must
1. A storage tank at an existing affected source with a capacity ≥18.9 cubic meters (5,000 gallons) and <189.3 cubic meters (50,000 gallons).	a. The stored organic liquid is not crude oil and if the annual average true vapor pressure of the total Table 1 organic HAP in the stored organic liquid is ≥27.6 kilopascals (4.0 psia) and <76.6 kilopascals (11.1 psia).	i. Reduce emissions of organic HAP (or, upon approval, TOC) by 95 weight-percent or, as an option, to an exhaust concentration less than or equal to 20 parts per million by volume, on a dry basis corrected to 3% oxygen for combustion devices using supplemental combustion air, by venting emissions through a closed vent system to any combination of control devices meeting the applicable requirements of 40 CFR part 63, subpart SS; OR ii. Comply with the work practice standards specified in Table 4 to this subpart, item 1.a, for tanks storing the liquids described in that table.
	b. The stored organic liquid is crude oil.	i. See the requirement in item 1.a.i or 1.a.ii of this table.
2. A storage tank at an existing affected source with a capacity ≥189.3 cubic meters (50,000 gallons).	a. The stored organic liquid is not crude oil and if the annual average true vapor pressure of the total Table 1 organic HAP in the stored organic liquid is <76.6 kilopascals (11.1 psia).	i. See the requirement in item 1.a.i or 1.a.ii of this table.
	b. The stored organic liquid is crude oil.	i. See the requirement in item 1.a.i or 1.a.ii of this table.
3. A storage tank at a reconstructed or new affected source with a capacity ≥18.9 cubic meters (5,000 gallons) and <37.9 cubic meters (10,000 gallons).	a. The stored organic liquid is not crude oil and if the annual average true vapor pressure of the total Table 1 organic HAP in the stored organic liquid is ≥27.6 kilopascals (4.0 psia) and <76.6 kilopascals (11.1 psia).	i. See the requirement in item 1.a.i or 1.a.ii of this table.
	b. The stored organic liquid is crude oil	i. See the requirement in item 1.a.i or 1.a.ii of this table.
4. A storage tank at a reconstructed or new affected source with a capacity ≥37.9 cubic meters (10,000 gallons) and <189.3 cubic meters (50,000 gallons).	a. The stored organic liquid is not crude oil and if the annual average true vapor pressure of the total Table 1 organic HAP in the stored organic liquid is ≥0.7 kilopascals (0.1 psia) and <76.6 kilopascals (11.1 psia).	i. See the requirement in item 1.a.i or 1.a.ii of this table.
	b. The stored organic liquid is crude oil.	i. See the requirement in item 1.a.i or 1.a.ii of this table.
5. A storage tank at a reconstructed or new affected source with a capacity ≥189.3 cubic meters (50,000 gallons).	a. The stored organic liquid is not crude oil and if the annual average true vapor pressure of the total Table 1 organic HAP in the stored organic liquid is <76.6 kilopascals (11.1 psia).	i. See the requirement in item 1.a.i or 1.a.ii of this table.
	b. The stored organic liquid is crude oil.	i. See the requirement in item 1.a.i or 1.a.ii of this table.
6. A storage tank at an existing, reconstructed, or new affected source meeting the capacity criteria specified in Table 2, items 1 through 5 of this subpart.	a. The stored organic liquid is not crude oil and if the annual average true vapor pressure of the total Table 1 organic HAP in the stored organic liquid is ≥76.6 kilopascals (11.1 psia).	i. Reduce emissions of organic HAP (or, upon approval, TOC) by 95 weight-percent or, as an option, to an exhaust concentration less than or equal to 20 parts per million by volume, on a dry basis corrected to 3% oxygen for combustion devices using supplemental combustion air, by venting emissions through a closed vent system to any combination of control devices meeting the applicable requirements of 40 CFR part 63, subpart SS.

If you operate	And if	Then you must
7. A transfer rack at an existing facility where the total actual annual facility-level organic liquid loading volume through transfer racks out of the facility is between 800,000 gallons and less than 10 million gallons.	a. The organic HAP content of the organic liquid through the transfer rack is at least 98% by weight.	i. Reduce emissions of organic HAP (or, upon approval, TOC) from the loading of organic liquids by venting emissions through a closed vent system to any combination of control devices achieving 98 weight-percent HAP reduction, or as an option to an exhaust concentration less than or equal to 20 parts per million by volume, on a dry basis corrected to 3% oxygen for combustion devices using supplemental combustion air; AND ii. Vent emissions through a closed vent system to any combination of control devices meeting the applicable requirements of 40 CFR part 63, subpart SS, AND iii. Comply with the work practice standards specified in Table 4 to this subpart, item 2.
8. A transfer rack at an existing facility where the total actual annual facility-level organic liquid loading volume through transfer racks out of the facility is ≥10 million gallons.		i. See the requirements in items 7.a.i through 7.a.iii of this table.
9. A transfer rack at a new facility where the total actual annual facility-level organic liquid loading volume through transfer racks out of the facility is less than 800,000 gallons.	a. The organic HAP content of the organic liquid through the transfer rack is at least 25% by weight and the transfer rack is used for transferring organic liquids into transport vehicles.	i. See the requirements in items 7.a.i through 7.a.iii of this table.
	b. The transfer rack is used for the filling of containers with a capacity equal to or greater than 55 gallons.	i. Comply with the provisions of §§ 63.924 through 63.927 of 40 CFR part 63, Subpart PP—National Emission Standards for Containers, Container Level 3 controls.
10. A transfer rack at a new facility where the total actual annual facility-level organic liquid loading volume through transfer racks out of the facility is equal to or greater than 800,000 gallons.	a. The transfer rack is used for transferring organic liquids into transport vehicles.	i. See the requirements in items 7.a.i through 7.a.iii of this table.
	b. The transfer rack is used for the filling of containers with a capacity equal to or greater than 55 gallons.	i. Comply with the provisions of §§ 63.924 through 63.927 of 40 CFR part 63, Subpart PP—National Emission Standards for Containers, Container Level 3 controls.

As stated in §63.2346(e), you must comply with the operating limits for existing, reconstructed, or new affected sources as follows:

TABLE 3 TO SUBPART EEEE OF PART 63.—OPERATING LIMITS—HIGH THROUGHPUT TRANSFER RACKS

For each existing, each reconstructed, and each new affected source using	You must
1. A thermal oxidizer to comply with an emission limit in Table 2 to this subpart.	Maintain the daily average fire box or combustion zone temperature greater than or equal to the reference temperature established during the design evaluation or performance test that demonstrated compliance with the emission limit.
2. A catalytic oxidizer to comply with an emission limit in Table 2 to this subpart.	a. Replace the existing catalyst bed before the age of the bed exceeds the maximum allowable age established during the design evaluation or performance test that demonstrated compliance with the emission limit; AND b. Maintain the daily average temperature at the inlet of the catalyst bed greater than or equal to the reference temperature established during the design evaluation or performance test that demonstrated compliance with the emission limit; AND c. Maintain the daily average temperature difference across the catalyst bed greater than or equal to the minimum temperature difference established during the design evaluation or performance test that demonstrated compliance with the emission limit.
3. An absorber to comply with an emission limit in Table 2 to this subpart.	a. Maintain the daily average concentration level of organic compounds in the absorber exhaust less than or equal to the reference concentration established during the design evaluation or performance test that demonstrated compliance with the emission limit; OR b. Maintain the daily average scrubbing liquid temperature less than or equal to the reference temperature established during the design evaluation or performance test that demonstrated compliance with the emission limit; AND c. Maintain the difference between the specific gravities of the saturated and fresh scrubbing fluids greater than or equal to the difference established during the design evaluation or performance test that demonstrated compliance with the emission limit.
4. A condenser to comply with an emission limit in Table 2 to this subpart.	a. Maintain the daily average concentration level of organic compounds at the condenser exit less than or equal to the reference concentration established during the design evaluation or performance test that demonstrated compliance with the emission limit; OR b. Maintain the daily average condenser exit temperature less than or equal to the reference temperature established during the design evaluation or performance test that demonstrated compliance with the emission limit.

For each existing, each reconstructed, and each new affected source using	You must
5. An adsorption system with adsorbent regeneration to comply with an emission limit in Table 2 to this subpart.	a. Maintain the daily average concentration level of organic compounds in the adsorber exhaust less than or equal to the reference concentration established during the design evaluation or performance test that demonstrated compliance with the emission limit; OR b. Maintain the total regeneration stream mass flow during the adsorption bed regeneration cycle greater than or equal to the reference stream mass flow established during the design evaluation or performance test that demonstrated compliance with the emission limit; AND c. Before the adsorption cycle commences, achieve and maintain the temperature of the adsorption bed after regeneration less than or equal to the reference temperature established during the design evaluation or performance test that demonstrated compliance with the emission limit; AND d. Achieve a pressure reduction during each adsorption bed regeneration cycle greater than or equal to the pressure reduction established during the design evaluation or performance test that demonstrated compliance with the emission limit.
6. An adsorption system without adsorbent regeneration to comply with an emission limit in Table 2 to this subpart.	a. Maintain the daily average concentration level of organic compounds in the adsorber exhaust less than or equal to the reference concentration established during the design evaluation or performance test that demonstrated compliance with the emission limit; OR b. Replace the existing adsorbent in each segment of the bed with an adsorbent that meets the replacement specifications established during the design evaluation or performance test before the age of the adsorbent exceeds the maximum allowable age established during the design evaluation or performance test that demonstrated compliance with the emission limit; AND c. Maintain the temperature of the adsorption bed less than or equal to the reference temperature established during the design evaluation or performance test that demonstrated compliance with the emission limit.
7. A flare to comply with an emission limit in Table 2 to this subpart.	a. Comply with the equipment and operating requirements in § 63.987(a); AND b. Conduct an initial flare compliance assessment in accordance with § 63.987(b); AND c. Install and operate monitoring equipment as specified in § 63.987(c).
8. Another type of control device to comply with an emission limit in Table 2 to this subpart.	Submit a monitoring plan as specified in §§ 63.995(c) and 63.2366(c), and monitor the control device in accordance with that plan.

As stated in §63.2346, you may elect to comply with one of the work practice standards for existing, reconstructed, or new affected sources in the following table. If you elect to do so,

TABLE 4 TO SUBPART EEEE OF PART 63.—WORK PRACTICE STANDARDS

For each	You must
1. Storage tank at an existing, reconstructed, or new affected source meeting any set of tank capacity and organic HAP vapor pressure criteria specified in Table 2 to this subpart, items 1 through 5.	a. Comply with the requirements of 40 CFR part 63, subpart WW (control level 2), if you elect to meet 40 CFR part 63, subpart WW (control level 2), requirements as an alternative to the emission limit in Table 2 to this subpart, items 1 through 5; OR b. Comply with the requirements of § 63.984 in 40 CFR part 63, subpart SS, for routing emissions to a fuel gas system or back to the process.
2. Transfer rack at an existing, reconstructed, or new affected source meeting the facility-level organic liquid loading volume and transfer rack HAP content for organic liquids specified in Table 2 to this subpart, items 7 through 9.	a. If the option of a vapor balancing system is selected, install and operate a system that meets the requirements in Table 7 to this subpart, item 3.b; OR b. Comply with the requirements of § 63.984 in 40 CFR part 63, subpart SS, for routing emissions to a fuel gas system or back to the process.
3. Pump, valve, and sampling connection that operates in organic liquids service at least 300 hours per year at an existing, reconstructed, or new affected source.	Comply with the requirements for pumps, valves, and sampling connections in 40 CFR part 63, subpart TT (control level 1), subpart UU (control level 2), or subpart H.
4. Transport vehicles equipped with vapor collection equipment.	Follow the steps in 40 CFR 60.502(e) to ensure that organic liquids are loaded only into vapor-tight transport vehicles, and comply with the provisions in 40 CFR §60.502(f), (g), (h), and (i), except substitute the term transport vehicle at each occurrence of tank truck or gasoline tank truck in those paragraphs.
5. Transport vehicles without vapor collection equipment.	Ensure that organic liquids are loaded only into transport vehicles that have a current certification in accordance with the U.S. DOT pressure test requirements in 49 CFR 180 (cargo tanks) or 49 CFR 173.31 (tank cars).

As stated in §§63.2354(a) and 63.2362, you must comply with the requirements for performance tests and design evaluations for existing, reconstructed, or new affected sources as follows:

TABLE 5 TO SUBPART EEEE OF PART 63.—REQUIREMENTS FOR PERFORMANCE TESTS AND DESIGN EVALUATIONS

For	You must conduct	According to	Using	To Determine	According to the following requirements
1. Each existing, each reconstructed, and each new affected source using a nonflare control device to comply with an emission limit in Table 2 to this subpart, items 1 through 9.	a. A performance test to determine the organic HAP (or, upon approval, TOC) control efficiency of each nonflare control device, OR the exhaust concentration of each combustion device; OR	i. §63.985(b)(1)(ii), §63.988(b), §63.990(b), or §63.995(b).	(1) EPA Method 1 or 1A in appendix A of 40 CFR part 60, as appropriate.	(A) Sampling port locations and the required number of traverse points.	(i) Sampling sites must be located at the inlet and outlet of each control device if complying with the control efficiency requirement or at the outlet of the control device if complying with the exhaust concentration requirement; AND (ii) The outlet sampling site must be located at each control device prior to any releases to the atmosphere.
			(2) EPA Method 2, 2A, 2C, 2D, 2F, or 2G in appendix A of 40 CFR part 60, as appropriate.	(A) Stack gas velocity and volumetric flow rate.	See the requirements in items 1.a.i.(1)(A) (i) and (ii) of this table.
			(3) EPA Method 3 or 3B in appendix A of 40 CFR part 60, as appropriate.	(A) Concentration of CO_2 and O_2 and dry molecular weight of the stack gas.	See the requirements in items 1.a.i.(1)(A) (i) and (ii) of this table.
			(4) EPA Method 4 in appendix A of 40 CFR part 60.	(A) Moisture content of the stack gas.	See the requirements in items 1.a.i.(1)(A) (i) and (ii) of this table.
			(5) EPA Method 18, 25, or 25A in appendix A of 40 CFR part 60, as appropriate, or EPA Method 316 in appendix A of 40 CFR part 63 for measuring formaldehyde.	(A) Total organic HAP (or, upon approval, TOC), or formaldehyde emissions.	(i) The organic HAP used for the calibration gas for EPA Method 25A must be the single organic HAP representing the largest percent by volume of emissions; AND (ii) During the performance test, you must establish the operating parameter limits within which total organic HAP (or, upon approval, TOC) emissions are reduced by the required weight percent or, as an option for nonflare combustion devices, to 20 ppmv exhaust concentration.
	b. A design evaluation (for nonflare control devices) to determine the organic HAP (or, upon approval, TOC) control efficiency of each nonflare control device, or the exhaust concentration of each combustion control device.	§63.985(b)(1)(i).			During a design evaluation, you must establish the operating parameter limits within which total organic HAP, (or, upon approval, TOC) emissions are reduced by at least 95 weight-percent or as an option to 20 ppmv exhaust concentration.
2. Each transport vehicle that you own or operate that is equipped with vapor collection equipment and loads organic liquids at an affected transfer rack at an existing, reconstructed, or new affected source.	A performance test to determine the vapor tightness of the tank and then repair as needed until it passes the test.		EPA Method 27 in appendix A of 40 CFR part 60.	Vapor tightness.	The pressure change in the tank must be no more than 250 pascals (1 inch of water) in 5 minutes after it is pressurized to 4,500 pascals (18 inches of water).

As stated in §§63.2370(a) and 63.2382(b), you must show initial compliance with the emission limits for existing, reconstructed, or new affected sources as follows:

TABLE 6 TO SUBPART EEEE OF PART 63.—INITIAL COMPLIANCE WITH EMISSION LIMITS

For each	For the following emission unit	You have demonstrated initial compliance if
1. Storage tank at an existing, reconstructed, or new affected source meeting either set of tank capacity and liquid organic HAP vapor pressure criteria specified in Table 2 to this subpart, items 1 through 6	Reduce total organic HAP (or, upon approval, TOC) emissions by at least 95 weight-percent, or as an option for combustion devices to an exhaust concentration of ≤20 ppmv.	Total organic HAP (or, upon approval, TOC) emissions, based on the results of the performance testing or design evaluation specified in Table 5 to this subpart, item 1.a or 1.b, respectively, are reduced by at least 95 weight-percent or as an option to an exhaust concentration ≤20 ppmv.
2. Transfer rack at an existing, reconstructed, or new affected source meeting the facility level organic liquid loading volume and transfer rack HAP content for organic liquids criteria specified in Table 2 to this subpart, items 7 through 9.	Reduce total organic HAP (or, upon approval, TOC) emissions by at least 98 weight-percent, or as an option for combustion devices to an exhaust concentration of ≤20 ppmv.	Total organic HAP (or, upon approval, TOC) Emissions, based on the results of the performance testing or design evaluation specified in Table 5 to this subpart, item 1.a or 1.b, respectively, are reduced by at least 98 weight-percent or as an option for combustion devices to an exhaust concentration of ≤20 ppmv.

TABLE 7 TO SUBPART EEEE OF PART 63.—INITIAL COMPLIANCE WITH WORK PRACTICE STANDARDS

For each	If you	You have demonstrated initial compliance if
1. Storage tank at an existing affected source meeting either set of tank capacity and liquid organic HAP vapor pressure criteria specified in Table 2 to this subpart, items 1 or 2.	a. Install a floating roof or equivalent control that meets the requirements in Table 4 to this subpart, item 1.a.	i. After emptying and degassing, you visually inspect each internal floating roof before the refilling of the storage tank and perform seal gap inspections of the primary and secondary rim seals of each external floating roof within 90 days after the refilling of the storage tank.
	b. Route emissions to a fuel gas system or back to the process.	i. You meet the requirements in § 63.984(b) and submit the statement of connection required by §63.984(c).
2. Storage tank at a reconstructed or new affected source meeting any set of tank capacity and liquid organic HAP vapor pressure criteria specified in Table 2 to this subpart, items 3 through 5.	a. Install a floating roof or equivalent control that meets the requirements in Table 4 to this subpart, item 1.a.	i. You visually inspect each internal floating roof before the initial filling of the storage tank, and perform seal gap inspections of the primary and secondary rim seals of each external floating roof within 90 days after the initial filling of the storage tank.
	b. Route emissions to a fuel gas system or back to the process.	i. See item 1.b.i of this table.
3. Transfer rack at an existing, reconstructed, or new affected source that meets the facility level organic liquid loading volume and transfer rack HAP content for organic liquids criteria specified in Table 2 to this subpart, items 7 through 9.	a. Load organic liquids only into transport vehicles having current vapor tightness certification as described in Table 4 to this subpart, item 4.a and item 5.a.	i. You comply with the provisions specified in Table 4 to this subpart, item 4.a and item 5.a, as applicable.
	b. Install and operate a vapor balancing system.	i. You design and operate the vapor balancing system to route organic HAP vapors displaced from loading of organic liquids into transport vehicles to the appropriate storage tank or process unit.
4. Equipment leak component, as defined in §63.2406, that operates in organic liquids service ≥ 300 hours per year at an existing, reconstructed, or new affected source.	a. Carry out a leak detection and repair program or equivalent control according to one of the subparts listed in Table 4 to this subpart, item 3.a.	i. You specify which one of the control programs listed in Table 4 to this subpart you have selected, OR ii. Provide written specifications for your equivalent control approach.

As stated in §§63.2378(a) and (b) and 63.2390(b), you must show continuous compliance with the emission limits for existing, reconstructed, or new affected sources according to the following table:

TABLE 8 TO SUBPART EEEE OF PART 63.—CONTINUOUS COMPLIANCE WITH EMISSION LIMITS

For each	For the following emission limit	You must demonstrate continuous compliance by
1. Storage tank at an existing, reconstructed, or new affected source meeting any set of tank capacity and liquid organic HAP vapor pressure criteria specified in Table 2 to this subpart, items 1 through 6.	a. Reduce total organic HAP (or, upon approval, TOC) emissions from the closed vent system and control device by 95 weight-percent or greater, or as an option to 20 ppmv or less of total organic HAP (or, upon approval, TOC) in the exhaust of combustion devices.	i. Performing CMS monitoring and collecting data according to §§63.2366, 63.2374, and 63.2378; AND ii. Maintaining the operating limits established during the design evaluation or performance test.
2. Transfer rack at an existing, reconstructed, or new affected source that meets the facility level organic liquid loading volume and transfer rack HAP content for organic liquids criteria specified in Table 2, to this subpart items 7 through 9.	Reduce total organic HAP (or, upon approval, TOC) emissions from the closed vent system and control device by 98 weight-percent or greater, or as an option to 20 ppmv or less of organic HAP (or, upon approval, TOC) in the exhaust of combustion devices.	See the compliance demonstration in items 1.a.i and ii of this table.

As stated in §§63.2378(a) and (b) and 63.2390(b), you must show continuous compliance with the operating limits for existing, reconstructed, or new affected sources according to the following table:

TABLE 9 TO SUBPART EEEE OF PART 63.—CONTINUOUS COMPLIANCE WITH OPERATING LIMITS—HIGH THROUGHPUT TRANSFER RACKS

For each existing, reconstructed, and each new affected source using	For the following operating limit	You must demonstrate continuous compliance by
1. A thermal oxidizer to comply with an emission limit in Table 2 to this subpart.	a. Maintain the daily average fire box or combustion zone, as applicable, temperature greater than or equal to the reference temperature established during the design evaluation or performance test that demonstrated compliance with the emission limit.	i. Continuously monitoring and recording fire box or combustion zone, as applicable, temperature every 15 minutes and maintaining the daily average fire box temperature greater than or equal to the reference temperature established during the design evaluation or performance test that demonstrated compliance with the emission limit; AND ii. Keeping the applicable records required in §63.998.
2. A catalytic oxidizer to comply with an emission limit in Table 2 to this subpart.	a. Replace the existing catalyst bed before the age of the bed exceeds the maximum allowable age established during the design evaluation or performance test that demonstrated compliance with the emission limit.	i. Replacing the existing catalyst bed before the age of the bed exceeds the maximum allowable age established during the design evaluation or performance test that demonstrated compliance with the emission limit; AND ii. Keeping the applicable records required in §63.998.
	b. Maintain the daily average temperature at the inlet of the catalyst bed greater than or equal to the reference temperature established during the design evaluation or performance test that demonstrated compliance with the emission limit.	i. Continuously monitoring and recording the temperature at the inlet of the catalyst bed at least every 15 minutes and maintaining the daily average temperature at the inlet of the catalyst bed greater than or equal to the reference temperature established during the design evaluation or performance test that demonstrated compliance with the emission limit; AND ii. Keeping the applicable records required in §63.998.
	c. Maintain the daily average temperature difference across the catalyst bed greater than or equal to the minimum temperature difference established during the design evaluation or performance test that demonstrated compliance with the emission limit.	i. Continuously monitoring and recording the temperature at the outlet of the catalyst bed every 15 minutes and maintaining the daily average temperature difference across the catalyst bed greater than or equal to the minimum temperature difference established during the design evaluation or performance test that demonstrated compliance with the emission limit; AND ii. Keeping the applicable records required in § 63.998.
3. An absorber to comply with an emission limit in Table 2 to this subpart.	a. Maintain the daily average concentration level of organic compounds in the absorber exhaust less than or equal to the reference concentration established during the design evaluation or performance test that demonstrated compliance with the emission limit; OR	Continuously monitoring the organic concentration in the absorber exhaust and maintaining the daily average concentration less than or equal to the reference concentration established during the design evaluation or performance test that demonstrated compliance with the emission limit.

For each existing, reconstructed, and each new affected source using	For the following operating limit	You must demonstrate continuous compliance by
	b. Maintain the daily average scrubbing liquid temperature less than or equal to the reference temperature established during the design evaluation or performance test that demonstrated compliance with the emission limit; AND	Continuously monitoring the scrubbing liquid temperature and maintaining the daily average temperature less than or equal to the reference temperature established during the design evaluation or performance test that demonstrated compliance with the emission limit; AND
	c. Maintain the difference between the specific gravities of the saturated and fresh scrubbing fluids greater than or equal to the difference established during the design evaluation or performance test that demonstrated compliance with the emission limit.	Maintaining the difference between the specific gravities greater than or equal to the difference established during the design evaluation or performance test that demonstrated compliance with the emission limit.
4. A condenser to comply with an emission limit in Table 2 to this subpart.	a. Maintain the daily average concentration level of organic compounds at the exit of the condenser less than or equal to the reference concentration established during the design evaluation or performance test that demonstrated compliance with the emission limit; OR	Continuously monitoring the organic concentration at the condenser exit and maintaining the daily average concentration less than or equal to the reference concentration established during the design evaluation or performance test that demonstrated compliance with the emission limit.
	b. Maintain the daily average condenser exit temperature less than or equal to the reference temperature established during the design evaluation or performance test that demonstrated compliance with the emission limit.	i. Continuously monitoring and recording the temperature at the exit of the condenser at least every 15 minutes and maintaining the daily average temperature less than or equal to the reference temperature established during the design evaluation or performance test that demonstrated compliance with the emission limit; AND ii. Keeping the applicable records required in §63.998.
5. An adsorption system with adsorbent regeneration to comply with an emission limit in Table 2 to this subpart.	a. Maintain the daily average concentration level of organic compounds in the adsorber exhaust less than or equal to the reference concentration established during the design evaluation or performance test that demonstrated compliance with the emission limit.	i. Continuously monitoring the daily average organic concentration in the adsorber exhaust and maintaining the concentration less than or equal to the reference concentration; AND ii. Keeping the applicable records required in §63.998.
	b. Maintain the total regeneration stream mass flow during the adsorption bed regeneration cycle greater than or equal to the reference stream mass flow established during the design evaluation or performance test that demonstrated compliance with the emission limit; AND	Maintaining the total regeneration stream mass flow during the adsorption bed regeneration cycle greater than or equal to the reference stream mass flow established during the design evaluation or performance test that demonstrated compliance with the emission limit; AND
	c. Before the adsorption cycle commences, achieve and maintain the temperature of the adsorption bed after regeneration less than or equal to the reference temperature established during the design evaluation or performance test AND achieve greater than or equal to the pressure reduction during the adsorption bed regeneration cycle established during the design evaluation or performance test that demonstrated compliance with the emission limit.	Maintaining the temperature of the adsorption bed after regeneration less than or equal to the reference temperature established during the design evaluation or performance test that demonstrated compliance with the emission limit AND ii. Keeping the applicable records required in §63.998.
6. An adsorption system without adsorbent regeneration to comply with an emission limit in Table 2 to this subpart.	a. Maintain the daily average concentration level of organic compounds in the adsorber exhaust less than or equal to the reference concentration established during the design evaluation or performance test that demonstrated compliance with the emission limit; OR Continuously monitoring the organic concentration in the adsorber exhaust and maintaining the concentration less than or equal to the reference concentration.	
	b. Replace the existing adsorbent in each segment of the bed before the age of the adsorbent exceeds the maximum allowable age established during the design evaluation or performance test that demonstrated compliance with the emission limit; AND	i. Replacing the existing adsorbent in each segment of the bed before the age of the adsorbent exceeds the maximum allowable age established during the design evaluation or performance test that demonstrated compliance with the emission limit; AND ii. Keeping the applicable records required in §63.998.

For each existing, reconstructed, and each new affected source using	For the following operating limit	You must demonstrate continuous compliance by
	c. Maintain the temperature of the adsorption bed less than or equal to the reference temperature established during the design evaluation or performance test that demonstrated compliance with the emission limit.	i. Maintaining the temperature of the adsorption bed less than or equal to the reference temperature established during the design evaluation or performance test that demonstrated compliance with the emission limit; AND ii. Keeping the applicable records required in §63.998.
7. A flare to comply with an emission limit in Table 2 to this subpart.	a. Maintain a pilot flame in the flare at all times that vapors may be vented to the flare (§63.11(b)(5)).	i. Continuously operating a device that detects the presence of the pilot flame; AND ii. Keeping the applicable records required in §63.998.
	b. Maintain a flare flame at all times that vapors are being vented to the flare (§63.11(b)(5)).	i. Maintaining a flare flame at all times that vapors are being vented to the flare; AND ii. Keeping the applicable records required in §63.998.
	c. Operate the flare with no visible emissions, except for up to 5 minutes in any 2 consecutive hours (§63.11(b)(4)).	i. Operating the flare with no visible emissions exceeding the amount allowed; AND ii. Keeping the applicable records required in §63.998.
	d. Operate the flare with an exit velocity that is within the applicable limits in §63.11(b)(6), (7), and (8).	i. Operating the flare within the applicable exit velocity limits; AND ii. Keeping the applicable records required in §63.998.
	e. Operate the flare with a net heating value of the gas being combusted greater than the applicable minimum value in §63.11(b)(6)(ii).	i. Operating the flare with the gas net heating value within the applicable limit; AND ii. Keeping the applicable records required in §63.998.
8. Another type of control device to comply with an emission limit in Table 2 to this subpart.	Submit a monitoring plan as specified in §§63.995(c) and 63.2366(c), and monitor the control device in accordance with that plan.	Submitting a monitoring plan and monitoring the control device according to that plan.

As stated in §§63.2378(a) and (b) and 63.2386(c)(6), you must show continuous compliance with the work practice standards for existing, reconstructed, or new affected sources according to the following table:

TABLE 10 TO SUBPART EEEE OF PART 63.—CONTINUOUS COMPLIANCE WITH WORK PRACTICE STANDARDS

For each	For the following standard	You must demonstrate continuous compliance by
1. Internal floating roof (IFR) storage tank at an existing, reconstructed, or new affected source meeting any set of tank capacity and vapor pressure criteria specified in Table 2 to this subpart, items 1 through 5.	a. Install a floating roof designed and operated according to the applicable specifications in §63.1063(a) and (b).	i. Visually inspecting the floating roof deck, deck fittings, and rim seals of each IFR: once per year, and each time the storage tank is completely emptied and degassed, or every 10 years, whichever occurs first (§63.1063(c)(1), (d), and (e)); AND ii. Keeping the tank records required in §63.1065.
2. External floating roof (EFR) storage tank at an existing, reconstructed, or new affected source meeting any set of tank capacity and vapor pressure criteria specified in Table 2 to this subpart, items 1 through 5.	a. See the standard in item 1.a of this table.	i. Visually inspecting the floating roof deck, deck fittings, and rim seals of each EFR each time the storage tank is completely emptied and degassed, or every 10 years, whichever occurs first (§63.1063(c)(2), (d), and (e)); AND ii. Performing seal gap measurements on the secondary seal of each EFR at least once every year, and on the primary seal of each EFR at least every 5 years (§ 63.1063(c)(2), (d), and (e)); AND iii. Keeping the tank records required in §63.1065.
3. IFR or EFR tank at an existing, reconstructed, or new affected source meeting any set of tank capacity and vapor pressure criteria specified in Table 2 to this subpart, items 1 through 5.	a. Repair the conditions causing storage tank inspection failures (§63.1063(e)).	i. Repairing conditions causing inspection failures: before refilling the storage tank with organic liquid, or within 45 days (or up to 105 days with extensions) for a tank containing organic liquid; AND ii. Keeping the tank records required in §63.1065(b).
4. Transfer rack at an existing, reconstructed, or new affected source that meets the facility level organic liquid loading volume and transfer rack HAP content for organic liquids criteria specified in Table 2 to this subpart, items 7 through 9.	a. Ensure that organic liquids are loaded into transport vehicles in accordance with the requirements in Table 4 to this subpart, items 2.a, 2.b, and 2.c.	i. Ensuring that organic liquids are loaded into transport vehicles in accordance with the requirements in Table 4 to this subpart, items 2.a, 2.b, and 2.c.

For each	For the following standard	You must demonstrate continuous compliance by
	b. Install and operate a vapor balancing system.	i. Monitoring each potential source of vapor leakage in the system quarterly during the loading of a transport vehicle using the methods and procedures described in the rule requirements selected for the work practice standard for equipment leak components as specified in Table 4 to this subpart, item 3. An instrument reading of 500 ppmv defines a leak. Repair of leaks is performed according to the repair requirements specified in your selected equipment leak standards.
5. Equipment leak component, as defined in §63.2406, that operates in organic liquids service at least 300 hours per year.	a. Comply with the requirements of 40 CFR part 63, subpart TT, UU, or H.	i. Carrying out a leak detection and repair program in accordance with one of the subparts listed in item 5.a of this table.
6. Storage tank at an existing, reconstructed, or new affected source meeting any of the tank capacity and vapor pressure criteria specified in Table 2 to this subpart, items 1 through 6.	a. Route emissions to a fuel gas system or back to the process.	i. Continuing to meet the requirements specified in §63.984(b).

As stated in §63.2386(a), (b), and (f), you must submit compliance reports and startup, shutdown, and malfunction reports according to the following table:

TABLE 11 TO SUBPART EEEE OF PART 63.—REQUIREMENTS FOR REPORTS

You must submit a(n)	The report must contain	You must submit the report
1. Compliance report, or Periodic Report.	a. The information specified in §63.2386(c), (d), and (e). If you had a startup, shutdown, or malfunction during the reporting period and you took actions consistent with your SSM plan, the report must also include the information in §63.10(d)(5)(i).	Semiannually, and it must be postmarked by January 31 or July 31, in accordance with §63.2386(b).
	b. The information required by 40 CFR part 63, subpart TT, UU, or H, as applicable, for pumps, valves, and sampling connections	See the submission requirement in item 1.a of this table.
	c. The information required by §63.999(c).	See the submission requirement in item 1.a of this table.
	d. The information specified in §63.1066(b) including: notification of inspection, inspection results, requests for alternate devices, and requests for extensions, as applicable.	See the submission requirement in item 1.a of this table.
2. Immediate startup, shutdown, and malfunction report if you had a startup, shutdown, or malfunction during the reporting period, and you took an action that was not consistent with your SSM plan.	a. The information required in §63.10(d)(5)(ii).	i. By FAX or telephone within 2 working days after starting actions inconsistent with the plan; AND ii. By letter within 7 working days after the end of the event unless you have made alternative arrangements with the permitting authority (§63.10(d)(5)(ii)).

As stated in §§63.2382 and 63.2398, you must comply with the applicable General Provisions requirements as follows:

Table 12 to Subpart EEEE of Part 63--Applicability of General Provisions to Subpart EEEE

Citation	Subject	Brief Description	Applies to Subpart EEEE
§63.1	Applicability	Initial applicability determination; Applicability after standard established; Permit requirements; Extensions, Notifications	Yes
§63.2	Definitions	Definitions for part 63 standards	Yes
§63.3	Units and Abbreviations	Units and abbreviations for part 63 standards	Yes
§63.4	Prohibited Activities and Circumvention	Prohibited activities; Circumvention, Severability	Yes
§63.5	Construction/ Reconstruction	Applicability; Applications; Approvals	Yes
§63.6(a)	Compliance with Standards/O&M-Applicability	GP apply unless compliance extension; GP apply to area sources that become major	Yes
§63.6(b)(1)-(4)	Compliance Dates for New and Reconstructed Sources	Standards apply at effective date; 3 years after effective date; upon startup; 10 years after construction or reconstruction commences for section 112(f)	Yes
§63.6(b)(5)	Notification	Must notify if commenced construction or reconstruction after proposal	Yes
§63.6(b)(6)	[Reserved]		
§63.6(b)(7)	Compliance Dates for New and Reconstructed Area Sources that Become Major	Area sources that become major must comply with major source standards immediately upon becoming major, regardless of whether required to comply when they were an area source	Yes
§63.6(c)(1)-(2)	Compliance Dates for Existing Sources	Comply according to date in this subpart, which must be no later than 3 years after effective date; for section 112(f) standards, comply within 90 days of effective date unless compliance extension	Yes
§63.6(c)(3)-(4)	[Reserved]		
§63.6(c)(5)	Compliance Dates for Existing Area Sources that Become Major	Area sources that become major must comply with major source standards by date indicated in this subpart or by equivalent time period (e.g., 3 years)	Yes
§63.6(d)	[Reserved]		
§63.6(e)(1)	Operation & Maintenance	Operate to minimize emissions at all times; correct malfunctions as soon as practicable; and operation and maintenance requirements independently enforceable; information Administrator will use to determine if operation and maintenance requirements were met	Yes
§63.6(e)(2)	[Reserved]		
§63.6(e)(3)	Startup, Shutdown, and Malfunction (SSM) Plan	Requirement for SSM plan; content of SSM plan; actions during SSM	Yes; however, the 2-day reporting requirement in paragraph §63.6(e)(3)(iv) does not apply.
§63.6(f)(1)	Compliance Except During SSM	You must comply with emission standards at all times except during SSM	Yes
§63.6(f)(2)-(3)	Methods for Determining Compliance	Compliance based on performance test, operation and maintenance plans, records, inspection	Yes
§63.6(g)(1)-(3)	Alternative Standard	Procedures for getting an alternative standard	Yes
§63.6(h)(1)	Compliance with Opacity/ Visible Emission (VE) Standards	You must comply with opacity/VE standards at all times except during SSM	No
§63.6(h)(2)(i)	Determining Compliance with Opacity/VE Standards	If standard does not state test method, use EPA Method 9 for opacity in appendix A of part 60 of this chapter and EPA Method 22 for VE in appendix A of part 60 of this chapter	No
§63.6(h)(2)(ii)	[Reserved]		
§63.6(h)(2)(iii)	Using Previous Tests to Demonstrate Compliance with Opacity/VE Standards	Criteria for when previous opacity/VE testing can be used to show compliance with this subpart	No
§63.6(h)(3)	[Reserved]		
§63.6(h)(4)	Notification of Opacity/ VE Observation Date	Must notify Administrator of anticipated date of observation	No

Citation	Subject	Brief Description	Applies to Subpart EEEE
§63.6(h)(5)(i), (iii)-(v)	Conducting Opacity/VE Observations	Dates and schedule for conducting opacity/VE observations	No
§63.6(h)(5)(ii)	Opacity Test Duration and Averaging Times	Must have at least 3 hours of observation with thirty 6-minute averages	No
§63.6(h)(6)	Records of Conditions During Opacity/VE Observations	Must keep records available and allow Administrator to inspect	No
§63.6(h)(7)(i)	Report Continuous Opacity Monitoring System (COMS) Monitoring Data from Performance Test	Must submit COMS data with other performance test data7	No
§63.6(h)(7)(ii)	Using COMS Instead of EPA Method 9	Can submit COMS data instead of EPA Method 9 results even if rule requires EPA Method 9 in appendix A of part 60 of this chapter, but must notify Administrator before performance test	No
§63.6(h)(7)(iii)	Averaging Time for COMS During Performance Test	To determine compliance, must reduce COMS data to 6-minute averages	No
§63.6(h)(7)(iv)	COMS Requirements	Owner/operator must demonstrate that COMS performance evaluations are conducted according to §63.8(e); COMS are properly maintained and operated according to §63.8(c) and data quality as §63.8(d)	No
§63.6(h)(7)(v)	Determining Compliance with Opacity/VE Standards	COMS is probable but not conclusive evidence of compliance with opacity standard, even if EPA Method 9 observation shows otherwise. Requirements for COMS to be probable evidence--proper maintenance, meeting Performance Specification 1 in appendix B of part 60 of this chapter, and data have not been altered	No
§63.6(h)(8)	Determining Compliance with Opacity/VE Standards	Administrator will use all COMS, EPA Method 9 (in appendix A of part 60 of this chapter), and EPA Method 22 (in appendix A of part 60 of this chapter) results, as well as information about operation and maintenance to determine compliance	Yes
§63.6(h)(9)	Adjusted Opacity Standard	Procedures for Administrator to adjust an opacity standard	Yes
§63.6(i)(1)-(14)	Compliance Extension	Procedures and criteria for Administrator to grant compliance extension	Yes
§63.6(j)	Presidential Compliance Exemption	President may exempt any source from requirement to comply with this subpart	Yes
§63.7(a)(2)	Performance Test Dates	Dates for conducting initial performance testing; must conduct 180 days after compliance date	Yes
§63.7(a)(3)	Section 114 Authority	Administrator may require a performance test under CAA section 114 at any time	Yes
§63.7(b)(1)	Notification of Performance Test	Must notify Administrator 60 days before the test	Yes
§63.7(b)(2)	Notification of Rescheduling	If have to reschedule performance test, must notify Administrator of rescheduled date as soon as practicable and without delay	Yes
§63.7(c)	Quality Assurance (QA)/ Test Plan	Requirement to submit site-specific test plan 60 days before the test or on date Administrator agrees with; test plan approval procedures; performance audit requirements; internal and external QA procedures for testing	Yes
§63.7(d)	Testing Facilities	Requirements for testing facilities	Yes
§63.7(e)(1)	Conditions for Conducting Performance Tests	Performance tests must be conducted under representative conditions; cannot conduct performance tests during SSM	Yes
§63.7(e)(2)	Conditions for Conducting Performance Tests	Must conduct according to this subpart and EPA test methods unless Administrator approves alternative	Yes
§63.7(e)(3)	Test Run Duration	Must have three test runs of at least 1 hour each; compliance is based on arithmetic mean of three runs; conditions when data from an additional test run can be used	Yes; however, for transfer racks per §§63.987(b)(3)(i)(A)-(B) and 63.997(e)(1)(v)(A)-(B) provide exceptions to the requirement for test runs to be at least 1 hour each

Citation	Subject	Brief Description	Applies to Subpart EEEE
§63.7(f)	Alternative Test Method	Procedures by which Administrator can grant approval to use an intermediate or major change, or alternative to a test method	Yes
§63.7(g)	Performance Test Data Analysis	Must include raw data in performance test report; must submit performance test data 60 days after end of test with the notification of compliance status; keep data for 5 years	Yes
§63.7(h)	Waiver of Tests	Procedures for Administrator to waive performance test	Yes
§63.8(a)(1)	Applicability of Monitoring Requirements	Subject to all monitoring requirements in standard.	Yes
§63.8(a)(2)	Performance Specifications	Performance Specifications in appendix B of 40 CFR part 60 apply	Yes
§63.8(a)(3)	[Reserved]		
§63.8(a)(4)	Monitoring of Flares	Monitoring requirements for flares in §63.11 apply	Yes; however, monitoring requirements in §63.987(c) also apply
§63.8(b)(1)	Monitoring	Must conduct monitoring according to standard unless Administrator approves alternative	Yes
§63.8(b)(2)-(3)	Multiple Effluents and Multiple Monitoring Systems	Specific requirements for installing monitoring systems; must install on each affected source or after combined with another affected source before it is released to the atmosphere provided the monitoring is sufficient to demonstrate compliance with the std; if more than one monitoring system on an emission point, must report all monitoring system results, unless one monitoring system is a backup	Yes
§63.8(c)(1)	Monitoring System Operation and Maintenance	Maintain monitoring system in a manner consistent with good air pollution control practices	Yes
§63.8(c)(1)(i)-(iii)	Routine and Predictable SSM	Follow the SSM plan for routine repairs; keep parts for routine repairs readily available; reporting requirements for SSM when action is described in SSM plan	Yes
§63.8(c)(2)-(3)	Monitoring System Installation	Must install to get representative emission or parameter measurements; must verify operational status before or at performance test	Yes
§63.8(c)(4)	CMS Requirements	CMS must be operating except during breakdown, out-of control, repair, maintenance, and high-level calibration drifts; COMS must have a minimum of one cycle of sampling and analysis for each successive 10-second period and one cycle of data recording for each successive 6-minute period; CEMS must have a minimum of one cycle of operation for each successive 15-minute period	Yes; however, COMS are not applicable.
§63.8(c)(5)	COMS Minimum Procedures	COMS minimum procedures	No
§63.8(c)(6)-(8)	CMS Requirements	Zero and high level calibration check requirements. Out-of-control periods	Yes
§63.8(d)	CMS Quality Control	Requirements for CMS quality control, including calibration, etc.; must keep quality control plan on record for 5 years; keep old versions for 5 years after revisions	Yes
§63.8(e)	CMS Performance Evaluation	Notification, performance evaluation test plan, reports	Yes
§63.8(f)(1)-(5)	Alternative Monitoring Method	Procedures for Administrator to approve alternative monitoring	Yes
§63.8(f)(6)	Alternative to Relative Accuracy Test	Procedures for Administrator to approve alternative relative accuracy tests for CEMS	Yes
§63.8(g)	Data Reduction	COMS 6-minute averages calculated over at least 36 evenly spaced data points; CEMS 1 hour averages computed over at least 4 equally spaced data points; data that cannot be used in average	Yes; however, COMS are not applicable
§63.9(a)	Notification Requirements	Applicability and State delegation	Yes
§63.9(b)(1)-(2), (4)-(5)	Initial Notifications	Submit notification within 120 days after effective date; notification of intent to construct/reconstruct, notification of commencement of construction/ reconstruction, notification of startup; contents of each.	Yes

Citation	Subject	Brief Description	Applies to Subpart EEEE
§63.9(c)	Request for Compliance Extension	Can request if cannot comply by date or if installed best available control technology or lowest achievable emission rate (BACT/LAER)	Yes
§63.9(d)	Notification of Special Compliance Requirements for New Sources	For sources that commence construction between proposal and promulgation and want to comply 3 years after effective date	Yes
§63.9(e)	Notification of Performance Test	Notify Administrator 60 days prior	Yes
§63.9(f)	Notification of VE/Opacity Test	Notify Administrator 30 days prior	No
§63.9(g)	Additional Notifications When Using CMS	Notification of performance evaluation; notification about use of COMS data; notification that exceeded criterion for relative accuracy alternative	Yes; however, there are no opacity standards
§63.9(h)(1)-(6)	Notification of Compliance Status	Contents due 60 days after end of performance test or other compliance demonstration, except for opacity/VE, which are due 30 days after; when to submit to Federal vs. State authority	Yes; however, there are no opacity standards.
§63.9(i)	Adjustment of Submittal Deadlines	Procedures for Administrator to approve change in when notifications must be submitted	Yes
§63.9(j)	Change in Previous Information	Must submit within 15 days after the change	Yes
§63.10(a)	Record-keeping/ Reporting	Applies to all, unless compliance extension; when to submit to Federal vs. State authority; procedures for owners of more than one source	Yes
§63.10(b)(1)	Record-keeping/ Reporting	General requirements; keep all records readily available; keep for 5 years	Yes
§63.10(b)(2)(i)-(iv)	Records Related to Startup, Shutdown, and Malfunction	Occurrence of each for operations (process equipment); occurrence of each malfunction of air pollution control equipment; maintenance on air pollution control equipment; actions during SSM.	Yes
§63.10(b)(2)(vi)-(xi)	CMS Records	Malfunctions, inoperative, out-of-control periods	Yes
§63.10(b)(2)(xii)	Records	Records when under waiver	Yes
§63.10(b) (2)(xiii)	Records	Records when using alternative to relative accuracy test	Yes
§63.10(b) (2)(xiv)	Records	All documentation supporting initial notification and notification of compliance status	Yes
§63.10(b)(3)	Records	Applicability determinations	Yes
§63.10(c)	Records	Additional records for CMS	Yes
§63.10(d)(1)	General Reporting Requirements	Requirement to report	Yes
§63.10(d)(2)	Report of Performance Test Results	When to submit to Federal or State authority	Yes
§63.10(d)(3)	Reporting Opacity or VE Observations	What to report and when	Yes
§63.10(d)(4)	Progress Reports	Must submit progress reports on schedule if under compliance extension	Yes
§63.10(d)(5)	SSM Reports	Contents and submission	Yes
§63.10(e)(1)-(2)	Additional CMS Reports	Must report results for each CEMS on a unit; written copy of CMS performance evaluation; 2-3 copies of COMS performance evaluation	Yes; however, COMS are not applicable
§63.10(e)(3)(i)-(iii)	Reports	Schedule for reporting excess emissions and parameter monitor exceedance (now defined as deviations)	Yes; however, note that the title of the report is the compliance report; deviations include excess emissions and parameter exceedances
§63.10(e)(3)(iv)-(v)	Excess Emissions Reports	Requirement to revert to quarterly submission if there is an excess emissions and parameter monitor exceedances (now defined as deviations); provision to request semiannual reporting after compliance for 1 year; submit report by 30th day following end of quarter or calendar half; if there has not been an exceedance or excess emissions (now defined as deviations), report contents in a statement that there have been no deviations; must submit report containing all of the information in §§63.8(c)(7)-(8) and 63.10(c)(5)-(13)	Yes

Citation	Subject	Brief Description	Applies to Subpart EEEE
§63.10(e)(3)(vi)-(viii)	Excess Emissions Report and Summary Report	Requirements for reporting excess emissions for CMS (now called deviations); requires all of the information in §§63.10(c)(5)-(13) and 63.8(c)(7)-(8)	Yes
§63.10(e)(4)	Reporting COMS Data	Must submit COMS data with performance test data	No
§63.10(f)	Waiver for Record-keeping/Reporting	Procedures for Administrator to waive	Yes
§63.11(b)	Flares	Requirements for flares	Yes; §63.987 requirements apply, and the section references §63.11(b)
§63.12	Delegation	State authority to enforce standards	Yes
§63.13	Addresses	Addresses where reports, notifications, and requests are sent	Yes
§63.14	Incorporation by Reference	Test methods incorporated by reference	Yes
§63.15	Availability of Information	Public and confidential information	Yes

APPENDIX Q (Modified July 24, 2006)

40 CFR 63 SUBPART ZZZZ

Subpart ZZZZ—National Emission Standards for Hazardous Air Pollutants for Stationary Reciprocating Internal Combustion Engines

What This Subpart Covers

§63.6580 What is the purpose of subpart ZZZZ?

Subpart ZZZZ establishes national emission limitations and operating limitations for hazardous air pollutants (HAP) emitted from stationary reciprocating internal combustion engines (RICE) located at major sources of HAP emissions. This subpart also establishes requirements to demonstrate initial and continuous compliance with the emission limitations and operating limitations.

§63.6585 Am I subject to this subpart?

You are subject to this subpart if you own or operate a stationary RICE at a major source of HAP emissions, except if the stationary RICE is being tested at a stationary RICE test cell/stand.

(a) A stationary RICE is any internal combustion engine which uses reciprocating motion to convert heat energy into mechanical work and which is not mobile. Stationary RICE differ from mobile RICE in that a stationary RICE is not a non-road engine as defined at 40 CFR 1068.30, and is not used to propel a motor vehicle or a vehicle used solely for competition.

(b) A major source of HAP emissions is a plant site that emits or has the potential to emit any single HAP at a rate of 10 tons (9.07 megagrams) or more per year or any combination of HAP at a rate of 25 tons (22.68 megagrams) or more per year, except that for oil and gas production facilities, a major source of HAP emissions is determined for each surface site.

§63.6590 What parts of my plant does this subpart cover?

This subpart applies to each affected source.

(a) *Affected source.* An affected source is any existing, new, or reconstructed stationary RICE with a site-rating of more than 500 brake horsepower located at a major source of HAP emissions, excluding stationary RICE being tested at a stationary RICE test cell/stand.

(1) *Existing stationary RICE.* A stationary RICE is existing if you commenced construction or reconstruction of the stationary RICE before December 19, 2002. A change in ownership of an existing stationary RICE does not make that stationary RICE a new or reconstructed stationary RICE.

(2) *New stationary RICE.* A stationary RICE is new if you commenced construction of the stationary RICE on or after December 19, 2002.

(3) *Reconstructed stationary RICE.* A stationary RICE is reconstructed if you meet the definition of reconstruction in §63.2 and reconstruction is commenced on or after December 19, 2002.

(b) *Stationary RICE subject to limited requirements.* (1) An affected source which meets either of the criteria in paragraph (b)(1)(i) through (ii) of this section does not have to meet the requirements of this subpart and of subpart A of this part except for the initial notification requirements of §63.6645(d).

(i) The stationary RICE is a new or reconstructed emergency stationary RICE; or

(ii) The stationary RICE is a new or reconstructed limited use stationary RICE.

(2) A new or reconstructed stationary RICE which combusts landfill or digester gas equivalent to 10 percent or more of the gross heat input on an annual basis must meet the initial notification requirements of § 63.6645(d) and the requirements of §§ 63.6625(c), 63.6650(g), and 63.6655(c). These stationary RICE do not have to meet the emission limitations and operating limitations of this subpart.

(3) A stationary RICE which is an existing spark ignition 2 stroke lean burn (2SLB) stationary RICE, an existing spark ignition 4 stroke lean burn (4SLB) stationary RICE, an existing compression ignition (CI) stationary RICE, an existing emergency stationary RICE, an existing limited use stationary RICE, or an existing stationary RICE that combusts landfill gas or digester gas equivalent to 10 percent or more of the gross heat input on an annual basis, does not have to meet the requirements of this subpart and of subpart A of this part. No initial notification is necessary.

§ 63.6595 When do I have to comply with this subpart?

(a) *Affected sources.* (1) If you have an existing stationary RICE, you must comply with the applicable emission limitations and operating limitations no later than June 15, 2007.

(2) If you start up your new or reconstructed stationary RICE before August 16, 2004, you must comply with the applicable emission limitations and operating limitations in this subpart no later than August 16, 2004.

(3) If you start up your new or reconstructed stationary RICE after August 16, 2004, you must comply with the applicable emission limitations and operating limitations in this subpart upon startup of your affected source.

(b) *Area sources that become major sources.* If you have an area source that increases its emissions or its potential to emit such that it becomes a major source of HAP, the compliance dates in paragraphs (b)(1) and (2) of this section apply to you.

(1) Any stationary RICE for which construction or reconstruction is commenced after the date when your area source becomes a major source of HAP must be in compliance with this subpart upon startup of your affected source.

(2) Any stationary RICE for which construction or reconstruction is commenced before your area source becomes a major source of HAP must be in compliance with this subpart within 3 years after your area source becomes a major source of HAP.

(c) If you own or operate an affected source, you must meet the applicable notification requirements in § 63.6645 and in 40 CFR part 63, subpart A.

Emission and Operating Limitations

§63.6600 What emission limitations and operating limitations must I meet?

(a) If you own or operate an existing, new, or reconstructed spark ignition 4 stroke rich burn (4SRB) stationary RICE located at a major source of HAP emissions, you must comply with the emission limitations in Table 1a of this subpart and the operating limitations in Table 1b of this subpart which apply to you.

(b) If you own or operate a new or reconstructed 2SLB or 4SLB stationary RICE or a new or reconstructed CI stationary RICE located at a major source of HAP emissions, you must comply with the emission limitations in Table 2a of this subpart and the operating limitations in Table 2b of this subpart which apply to you.

(c) If you own or operate: An existing 2SLB stationary RICE, an existing 4SLB stationary RICE, or an existing CI stationary RICE; a stationary RICE that combusts landfill gas or digester gas equivalent to 10 percent or more of the gross heat input on an annual basis; an emergency stationary RICE; or a limited use stationary RICE, you do not need to comply with the emission limitations in Tables 1a and 2a of this subpart or operating limitations in Tables 1b and 2b of this subpart.

General Compliance Requirements

§63.6605 What are my general requirements for complying with this subpart?

(a) You must be in compliance with the emission limitations and operating limitations in this subpart that apply to you at all times, except during periods of startup, shutdown, and malfunction.

(b) If you must comply with emission limitations and operating limitations, you must operate and maintain your stationary RICE, including air pollution control and monitoring equipment, in a manner consistent with good air pollution control practices for minimizing emissions at all times, including during startup, shutdown, and malfunction.

Testing and Initial Compliance Requirements

§63.6610 By what date must I conduct the initial performance tests or other initial compliance demonstrations?

(a) You must conduct the initial performance test or other initial compliance demonstrations in Table 4 of this subpart that apply to you within 180 days after the compliance date that is specified for your stationary RICE in §63.6595 and according to the provisions in §63.7(a)(2).

(b) If you commenced construction or reconstruction between December 19, 2002 and June 15, 2004, you must demonstrate initial compliance with either the proposed emission limitations or the promulgated emission limitations no later than February 10, 2005 or no later than 180 days after startup of the source, whichever is later, according to §63.7(a)(2)(ix).

(c) If you commenced construction or reconstruction between December 19, 2002 and June 15, 2004, and you chose to comply with the proposed emission limitations when demonstrating initial compliance, you must conduct a second performance test to demonstrate compliance with the promulgated emission limitations by December 13, 2007 or after startup of the source, whichever is later, according to §63.7(a)(2)(ix).

(d) An owner or operator is not required to conduct an initial performance test on units for which a performance test has been previously conducted, but the test must meet all of the conditions described in paragraphs (d)(1) through (5) of this section.

(1) The test must have been conducted using the same methods specified in this subpart, and these methods must have been followed correctly.

(2) The test must not be older than 2 years.

(3) The test must be reviewed and accepted by the Administrator.

(4) Either no process or equipment changes must have been made since the test was performed, or the owner or operator must be able to demonstrate that the results of the performance test, with or without adjustments, reliably demonstrate compliance despite process or equipment changes.

(5) The test must be conducted at any load condition within plus or minus 10 percent of 100 percent load.

§63.6615 When must I conduct subsequent performance tests?

If you must comply with the emission limitations and operating limitations, you must conduct subsequent performance tests as specified in Table 3 of this subpart.

§63.6620 What performance tests and other procedures must I use?

(a) You must conduct each performance test in Tables 3 and 4 of this subpart that applies to you.

(b) Each performance test must be conducted according to the requirements in §63.7(e)(1) and under the specific conditions that this subpart specifies in Table 4. The test must be conducted at any load condition within plus or minus 10 percent of 100 percent load.

(c) You may not conduct performance tests during periods of startup, shutdown, or malfunction, as specified in §63.7(e)(1).

(d) You must conduct three separate test runs for each performance test required in this section, as specified in §63.7(e)(3). Each test run must last at least 1 hour

(e)(1) You must use Equation 1 of this section to determine compliance with the percent reduction requirement:

$$\frac{C_i - C_o}{C_i} \times 100 = R \quad \text{(Eq. 1)}$$

Where:

Ci = concentration of CO or formaldehyde at the control device inlet,

Co = concentration of CO or formaldehyde at the control device outlet, and

R = percent reduction of CO or formaldehyde emissions.

(2) You must normalize the carbon monoxide (CO) or formaldehyde concentrations at the inlet and outlet of the control device to a dry basis and to 15 percent oxygen, or an equivalent percent carbon dioxide (CO_2). If pollutant concentrations are to be corrected to 15 percent oxygen and CO_2 concentration is measured in lieu of oxygen concentration measurement, a CO_2 correction factor is needed. Calculate the CO_2 correction factor as described in paragraphs (e)(2)(i) through (iii) of this section.

(i) Calculate the fuel-specific Fo value for the fuel burned during the test using values obtained from Method 19, section 5.2, and the following equation:

$$F_o = \frac{0.209\, F_d}{F_c} \quad \text{(Eq. 2)}$$

Where:

Fo = Fuel factor based on the ratio of oxygen volume to the ultimate CO_2 volume produced by the fuel at zero percent excess air.

0.209 = Fraction of air that is oxygen, percent/100.

Fd = Ratio of the volume of dry effluent gas to the gross calorific value of the fuel from Method 19, dsm^3/J ($dscf/10^6$ Btu).

Fc = Ratio of the volume of CO_2 produced to the gross calorific value of the fuel from Method 19, dsm^3/J ($dscf/10^6$ Btu).

(ii) Calculate the CO_2 correction factor for correcting measurement data to 15 percent oxygen, as follows:

$$X_{CO2} = \frac{5.9}{F_o} \quad \text{(Eq. 3)}$$

Where:

X_{CO2} = CO_2 correction factor, percent.

5.9 = 20.9 percent O_2-15 percent O_2, the defined O_2 correction value, percent.

(iii) Calculate the NO_X and SO_2 gas concentrations adjusted to 15 percent O_2 using CO_2 as follows:

$$C_{adj} = C_d \frac{X_{CO2}}{\%CO_2} \quad \text{(Eq. 4)}$$

Where:

$\%CO_2$ = Measured CO_2 concentration measured, dry basis, percent.

(f) If you comply with the emission limitation to reduce CO and you are not using an oxidation catalyst, if you comply with the emission limitation to reduce formaldehyde and you are not using NSCR, or if you comply with the emission limitation to limit the concentration of formaldehyde in the stationary RICE exhaust and you are not using an oxidation catalyst or NSCR, you must petition the Administrator for operating limitations to be established during the initial performance test and continuously monitored thereafter; or for approval of no operating limitations. You must not conduct the initial performance test until after the petition has been approved by the Administrator.

(g) If you petition the Administrator for approval of operating limitations, your petition must include the information described in paragraphs (g)(1) through (5) of this section.

(1) Identification of the specific parameters you propose to use as operating limitations;

(2) A discussion of the relationship between these parameters and HAP emissions, identifying how HAP emissions change with changes in these parameters, and how limitations on these parameters will serve to limit HAP emissions;

(3) A discussion of how you will establish the upper and/or lower values for these parameters which will establish the limits on these parameters in the operating limitations;

(4) A discussion identifying the methods you will use to measure and the instruments you will use to monitor these parameters, as well as the relative accuracy and precision of these methods and instruments; and

(5) A discussion identifying the frequency and methods for recalibrating the instruments you will use for monitoring these parameters.

(h) If you petition the Administrator for approval of no operating limitations, your petition must include the information described in paragraphs (h)(1) through (7) of this section.

(1) Identification of the parameters associated with operation of the stationary RICE and any emission control device which could change intentionally (*e.g.*, operator adjustment, automatic controller adjustment, *etc.*) or unintentionally (*e.g.*, wear and tear, error, *etc.*) on a routine basis or over time;

(2) A discussion of the relationship, if any, between changes in the parameters and

changes in HAP emissions;

(3) For the parameters which could change in such a way as to increase HAP emissions, a discussion of whether establishing limitations on the parameters would serve to limit HAP emissions;

(4) For the parameters which could change in such a way as to increase HAP emissions, a discussion of how you could establish upper and/or lower values for the parameters which would establish limits on the parameters in operating limitations;

(5) For the parameters, a discussion identifying the methods you could use to measure them and the instruments you could use to monitor them, as well as the relative accuracy and precision of the methods and instruments;

(6) For the parameters, a discussion identifying the frequency and methods for recalibrating the instruments you could use to monitor them; and

(7) A discussion of why, from your point of view, it is infeasible or unreasonable to adopt the parameters as operating limitations.

(i) The engine percent load during a performance test must be determined by documenting the calculations, assumptions, and measurement devices used to measure or estimate the percent load in a specific application. A written report of the average percent load determination must be included in the notification of compliance status. The following information must be included in the written report: the engine model number, the engine manufacturer, the year of purchase, the manufacturer's site-rated brake horsepower, the ambient temperature, pressure, and humidity during the performance test, and all assumptions that were made to estimate or calculate percent load during the performance test must be clearly explained. If measurement devices such as flow meters, kilowatt meters, beta analyzers, stain gauges, etc. are used, the model number of the measurement device, and an estimate of its accurate in percentage of true value must be provided.

§63.6625 What are my monitoring, installation, operation, and maintenance requirements?

(a) If you elect to install a CEMS as specified in Table 5 of this subpart, you must install, operate, and maintain a CEMS to monitor CO and either oxygen or CO_2 at both the inlet and the outlet of the control device according to the requirements in paragraphs (a)(1) through (4) of this section.

(1) Each CEMS must be installed, operated, and maintained according to the applicable performance specifications of 40 CFR part 60, appendix B.

(2) You must conduct an initial performance evaluation and an annual relative accuracy test audit (RATA) of each CEMS according to the requirements in §63.8 and according to the applicable performance specifications of 40 CFR part 60, appendix B as well as daily and periodic data quality checks in accordance with 40 CFR part 60, appendix F, procedure 1.

(3) As specified in §63.8(c)(4)(ii), each CEMS must complete a minimum of one cycle of operation (sampling, analyzing, and data recording) for each successive 15-minute period. You must have at least two data points, with each representing a different 15-minute period, to have a valid hour of data.

(4) The CEMS data must be reduced as specified in § 63.8(g)(2) and recorded in parts per million or parts per billion (as appropriate for the applicable limitation) at 15 percent oxygen or the equivalent CO_2 concentration.

(b) If you are required to install a continuous parameter monitoring system (CPMS) as specified in Table 5 of this subpart, you must install, operate, and maintain each CPMS according to the requirements in §63.8.

(c) If you are operating a new or reconstructed stationary RICE which fires landfill gas or digester gas equivalent to 10 percent or more of the gross heat input on an annual basis, you must monitor and record your fuel usage daily with separate fuel meters to measure the volumetric flow rate of each fuel. In addition, you must operate your stationary RICE in a manner which reasonably minimizes HAP emissions.

§63.6630 How do I demonstrate initial compliance with the emission limitations and operating limitations?

(a) You must demonstrate initial compliance with each emission and operating limitation that applies to you according to Table 5 of this subpart.

(b) During the initial performance test, you must establish each operating limitation in Tables 1b and 2b of this subpart that applies to you.

(c) You must submit the Notification of Compliance Status containing the results of the initial compliance demonstration according to the requirements in §63.6645.

Continuous Compliance Requirements

§63.6635 How do I monitor and collect data to demonstrate continuous compliance?

(a) If you must comply with emission and operating limitations, you must monitor and collect data according to this section.

(b) Except for monitor malfunctions, associated repairs, and required quality assurance or control activities (including, as applicable, calibration checks and required zero and span adjustments), you must monitor continuously at all times that the stationary RICE is operating.

(c) You may not use data recorded during monitoring malfunctions, associated repairs, and required quality assurance or control activities in data averages and calculations used to report emission or operating levels. You must, however, use all the valid data collected during all other periods.

§63.6640 How do I demonstrate continuous compliance with the emission limitations and operating limitations?

(a) You must demonstrate continuous compliance with each emission limitation and operating limitation in Tables 1a and 1b and Tables 2a and 2b of this subpart that apply to you according to methods specified in Table 6 of this subpart.

(b) You must report each instance in which you did not meet each emission limitation or operating limitation in Tables 1a and 1b and Tables 2a and 2b of this subpart that apply to you. These instances are deviations from the emission and operating limitations in this subpart. These deviations must be reported according to the requirements in §63.6650. If you change your catalyst, you must reestablish the values of the operating parameters measured during the initial performance test. When you reestablish the values of your operating parameters, you must also conduct a performance test to demonstrate that you are meeting the required emission limitation applicable to your stationary RICE.

(c) During periods of startup, shutdown, and malfunction, you must operate in accordance with your startup, shutdown, and malfunction plan.

(d) Consistent with §§63.6(e) and 63.7(e)(1), deviations from the emission or operating limitations that occur during a period of startup, shutdown, or malfunction are not violations if you demonstrate to the Administrator's satisfaction that you were operating in accordance with the startup, shutdown, and malfunction plan. For new, reconstructed, and rebuilt stationary RICE, deviations from the emission or operating limitations that occur during the first 200 hours of operation from engine startup (engine burn-in period) are not violations.

Rebuilt stationary RICE means a stationary RICE that has been rebuilt as that term is defined in 40 CFR §94.11(a).

(e) You must also report each instance in which you did not meet the requirements in Table 8 of this subpart that apply to you. If you own or operate an existing 2SLB stationary RICE, an existing 4SLB stationary RICE, an existing CI stationary RICE, an existing emergency stationary RICE, an existing limited use emergency stationary RICE, or an existing stationary RICE which fires landfill gas or digester gas equivalent to 10 percent or more of the gross heat input on an annual basis, you do not need to comply with the requirements in Table 8 of this subpart. If you own or operate a new or reconstructed stationary RICE that combusts landfill gas or digester gas equivalent to 10 percent or more of the gross heat input on an annual basis, a new or reconstructed emergency stationary RICE, or a new or

reconstructed limited use stationary RICE, you do not need to comply with the requirements in Table 8 of this subpart, except for the initial notification requirements.

Notifications, Reports, and Records

§63.6645 What notifications must I submit and when?

(a) You must submit all of the notifications in §§63.7(b) and (c), 63.8(e), (f)(4) and (f)(6), 63.9(b) through (e), and (g) and (h) that apply to you by the dates specified.

(b) As specified in §63.9(b)(2), if you start up your stationary RICE before the effective date of this subpart, you must submit an Initial Notification not later than December 13, 2004.

(c) If you start up your new or reconstructed stationary RICE on or after August 16, 2004, you must submit an Initial Notification not later than 120 days after you become subject to this subpart.

(d) If you are required to submit an Initial Notification but are otherwise not affected by the requirements of this subpart, in accordance with §63.6590(b), your notification should include the information in § 63.9(b)(2)(i) through (v), and a statement that your stationary RICE has no additional requirements and explain the basis of the exclusion (for example, that it operates exclusively as an emergency stationary RICE).

(e) If you are required to conduct a performance test, you must submit a Notification of Intent to conduct a performance test at least 60 days before the performance test is scheduled to begin as required in §63.7(b)(1).

(f) If you are required to conduct a performance test or other initial compliance demonstration as specified in Tables 4 and 5 to this subpart, you must submit a Notification of Compliance Status according to §63.9(h)(2)(ii).

(1) For each initial compliance demonstration required in Table 5 of this subpart that does not include a performance test, you must submit the Notification of Compliance Status before the close of business on the 30th day following the completion of the initial compliance demonstration.

(2) For each initial compliance demonstration required in Table 5 of this subpart that includes a performance test conducted according to the requirements in Table 4 to this subpart, you must submit the Notification of Compliance Status, including the performance test results, before the close of business on the 60th day following the completion of the performance test according to §63.10(d)(2).

§63.6650 What reports must I submit and when?

(a) You must submit each report in Table 7 of this subpart that applies to you.

(b) Unless the Administrator has approved a different schedule for submission of reports under §63.10(a), you must submit each report by the date in Table 7 of this subpart and according to the requirements in paragraphs (b)(1) through (5) of this section.

(1) The first Compliance report must cover the period beginning on the compliance date that is specified for your affected source in §63.6595 and ending on June 30 or December 31, whichever date is the first date following the end of the first calendar half after the compliance date that is specified for your source in §63.6595.

(2) The first Compliance report must be postmarked or delivered no later than July 31 or January 31, whichever date follows the end of the first calendar half after the compliance date that is specified for your affected source in §63.6595.

(3) Each subsequent Compliance report must cover the semiannual reporting period from January 1 through June 30 or the semiannual reporting period from July 1 through December 31.

(4) Each subsequent Compliance report must be postmarked or delivered no later than July 31 or January 31, whichever date is the first date following the end of the semiannual reporting period.

(5) For each stationary RICE that is subject to permitting regulations pursuant to 40 CFR part 70 or 71, and if the permitting authority has established dates for submitting semiannual reports pursuant to 40 CFR 70.6 (a)(3)(iii)(A) or 40 CFR 71.6 (a)(3)(iii)(A), you may submit the first and subsequent Compliance reports according to the dates the permitting authority has established instead of according to the dates in paragraphs (b)(1) through (4) of this section.

(c) The Compliance report must contain the information in paragraphs (c)(1) through (6) of this section.

(1) Company name and address.

(2) Statement by a responsible official, with that official's name, title, and signature, certifying the accuracy of the content of the report.

(3) Date of report and beginning and ending dates of the reporting period

(4) If you had a startup, shutdown, or malfunction during the reporting period, the compliance report must include the information in §63.10(d)(5)(i).

(5) If there are no deviations from any emission or operating limitations that apply to you, a statement that there were no deviations from the emission or operating limitations during the reporting period.

(6) If there were no periods during which the continuous monitoring system (CMS), including CEMS and CPMS, was out-of-control, as specified in §63.8(c)(7), a statement that there were no periods during which the CMS was out-of-control during the reporting period.

(d) For each deviation from an emission or operating limitation that occurs for a stationary RICE where you are not using a CMS to comply with the emission or operating limitations in this subpart, the Compliance report must contain the information in paragraphs (c)(1) through (4) of this section and the information in paragraphs (d)(1) and (2) of this section.

(1) The total operating time of the stationary RICE at which the deviation occurred during the reporting period.

(2) Information on the number, duration, and cause of deviations (including unknown cause, if applicable), as applicable, and the corrective action taken.

(e) For each deviation from an emission or operating limitation occurring for a stationary RICE where you are using a CMS to comply with the emission and operating limitations in this subpart, you must include information in paragraphs (c)(1) through (4) and (e)(1) through (12) of this section.

(1) The date and time that each malfunction started and stopped.

(2) The date, time, and duration that each CMS was inoperative, except for zero (low-level) and high-level checks.

(3) The date, time, and duration that each CMS was out-of-control, including the information in §63.8(c)(8).

(4) The date and time that each deviation started and stopped, and whether each deviation occurred during a period of malfunction or during another period.

(5) A summary of the total duration of the deviation during the reporting period, and the total duration as a percent of the total source operating time during that reporting period.

(6) A breakdown of the total duration of the deviations during the reporting period into those that are due to control equipment problems, process problems, other known causes, and other unknown causes.

(7) A summary of the total duration of CMS downtime during the reporting period, and the total duration of CMS downtime as a percent of the total operating time of the stationary RICE at which the CMS downtime occurred during that reporting period.

(8) An identification of each parameter and pollutant (CO or formaldehyde) that was monitored at the stationary RICE.

(9) A brief description of the stationary RICE.

(10) A brief description of the CMS.

(11) The date of the latest CMS certification or audit.

(12) A description of any changes in CMS, processes, or controls since the last reporting

period.

(f) Each affected source that has obtained a title V operating permit pursuant to 40 CFR part 70 or 71 must report all deviations as defined in this subpart in the semiannual monitoring report required by 40 CFR 70.6 (a)(3)(iii)(A) or 40 CFR 71.6 (a)(3)(iii)(A). If an affected source submits a Compliance report pursuant to Table 7 of this subpart along with, or as part of, the semiannual monitoring report required by 40 CFR 70.6 (a)(3)(iii)(A) or 40 CFR 71.6 (a)(3)(iii)(A), and the Compliance report includes all required information concerning deviations from any emission or operating limitation in this subpart, submission of the Compliance report shall be deemed to satisfy any obligation to report the same deviations in the semiannual monitoring report. However, submission of a Compliance report shall not otherwise affect any obligation the affected source may have to report deviations from permit requirements to the permit authority.

(g) If you are operating as a new or reconstructed stationary RICE which fires landfill gas or digester gas equivalent to 10 percent or more of the gross heat input on an annual basis, you must submit an annual report according to Table 7 of this subpart by the date specified unless the Administrator has approved a different schedule, according to the information described in paragraphs (b)(1) through (b)(5) of this section. You must report the data specified in (g)(1) through (g)(3) of this section.

(1) Fuel flow rate of each fuel and the heating values that were used in your calculations. You must also demonstrate that the percentage of heat input provided by landfill gas or digester gas is equivalent to 10 percent or more of the total fuel consumption on an annual basis.

(2) The operating limits provided in your federally enforceable permit, and any deviations from these limits.

(3) Any problems or errors suspected with the meters.

§63.6655 What records must I keep?

(a) If you must comply with the emission and operating limitations, you must keep the records described in paragraphs (a)(1) through (a)(3), (b)(1) through (b)(3) and (c) of this section.

(1) A copy of each notification and report that you submitted to comply with this subpart, including all documentation supporting any Initial Notification or Notification of Compliance Status that you submitted, according to the requirement in §63.10(b)(2)(xiv).

(2) The records in §63.6(e)(3)(iii) through (v) related to startup, shutdown, and malfunction.

(3) Records of performance tests and performance evaluations as required in §63.10(b)(2)(viii).

(b) For each CEMS or CPMS, you must keep the records listed in paragraphs (b)(1) through (3) of this section.

(1) Records described in § 63.10(b)(2)(vi) through (xi).

(2) Previous (*i.e.*, superseded) versions of the performance evaluation plan as required in §63.8(d)(3).

(3) Requests for alternatives to the relative accuracy test for CEMS or CPMS as required in §63.8(f)(6)(i), if applicable.

(c) If you are operating a new or reconstructed stationary RICE which fires landfill gas or digester gas equivalent to 10 percent or more of the gross heat input on an annual basis, you must keep the records of your daily fuel usage monitors.

(d) You must keep the records required in Table 6 of this subpart to show continuous compliance with each emission or operating limitation that applies to you.

§63.6660 In what form and how long must I keep my records?

(a) Your records must be in a form suitable and readily available for expeditious review according to §63.10(b)(1).

(b) As specified in §63.10(b)(1), you must keep each record for 5 years following the date of each occurrence, measurement, maintenance, corrective action, report, or record.

(c) You must keep each record readily accessible in hard copy or electronic form on-site for at least 2 years after the date of each occurrence, measurement, maintenance, corrective action, report, or record, according to § 63.10(b)(1). You can keep the records off-site for the remaining 3 years.

Other Requirements and Information

§63.6665 What parts of the General Provisions apply to me?

Table 8 of this subpart shows which parts of the General Provisions in §§ 63.1 through 63.15 apply to you. If you own or operate an existing 2SLB, an existing 4SLB stationary RICE, an existing CI stationary RICE, an existing stationary RICE that combusts landfill gas or digester gas equivalent to 10 percent or more of the gross heat input on an annual basis, an existing emergency stationary RICE, or an existing limited use stationary RICE, you do not need to comply with any of the requirements of the General Provisions. If you own or operate a new stationary RICE that combusts landfill gas or digester gas equivalent to 10 percent or more of the gross heat input on an annual basis, a new emergency stationary RICE, or a new limited use stationary RICE, you do not need to comply with the requirements in the General Provisions except for the initial notification requirements.

§63.6670 Who implements and enforces this subpart?

(a) This subpart is implemented and enforced by the U.S. EPA, or a delegated authority such as your State, local, or tribal agency. If the U.S. EPA Administrator has delegated authority to your State, local, or tribal agency, then that agency (as well as the U.S. EPA) has the authority to implement and enforce this subpart. You should contact your U.S. EPA Regional Office to find out whether this subpart is delegated to your State, local, or tribal agency.

(b) In delegating implementation and enforcement authority of this subpart to a State, local, or tribal agency under 40 CFR part 63, subpart E, the authorities contained in paragraph (c) of this section are retained by the Administrator of the U.S. EPA and are not transferred to the State, local, or tribal agency.

(c) The authorities that will not be delegated to State, local, or tribal agencies are:

(1) Approval of alternatives to the non-opacity emission limitations and operating limitations in §63.6600 under §63.6(g).

(2) Approval of major alternatives to test methods under §63.7(e)(2)(ii) and (f) and as defined in §63.90.

(3) Approval of major alternatives to monitoring under §63.8(f) and as defined in §63.90.

(4) Approval of major alternatives to recordkeeping and reporting under §63.10(f) and as defined in §63.90.

(5) Approval of a performance test which was conducted prior to the effective date of the rule, as specified in §63.6610(b).

§63.6675 What definitions apply to this subpart?

Terms used in this subpart are defined in the Clean Air Act (CAA); in 40 CFR 63.2, the General Provisions of this part; and in this section as follows:

Area source means any stationary source of HAP that is not a major source as defined in part 63.

Associated equipment as used in this subpart and as referred to in section 112(n)(4) of the CAA, means equipment associated with an oil or natural gas exploration or production well, and includes all equipment from the well bore to the point of custody transfer, except glycol dehydration units, storage vessels with potential for flash emissions, combustion turbines, and stationary RICE.

CAA means the Clean Air Act (42 U.S.C. 7401 *et seq.*, as amended by Public Law 101–549, 104 Stat. 2399).

Compression ignition engine means any stationary RICE in which a high boiling point liquid fuel injected into the combustion chamber ignites when the air charge has been compressed to a temperature sufficiently high for auto-ignition, including diesel engines, dual-fuel engines, and engines that are not spark ignition.

Custody transfer means the transfer of hydrocarbon liquids or natural gas: After processing and/or treatment in the producing

operations, or from storage vessels or automatic transfer facilities or other such equipment, including product loading racks, to pipelines or any other forms of transportation. For the purposes of this subpart, the point at which such liquids or natural gas enters a natural gas processing plant is a point of custody transfer.

Deviation means any instance in which an affected source subject to this subpart, or an owner or operator of such a source:

(1) Fails to meet any requirement or obligation established by this subpart, including but not limited to any emission limitation or operating limitation;

(2) Fails to meet any term or condition that is adopted to implement an applicable requirement in this subpart and that is included in the operating permit for any affected source required to obtain such a permit; or

(3) Fails to meet any emission limitation or operating limitation in this subpart during malfunction, regardless or whether or not such failure is permitted by this subpart.

(4) Fails to conform to any provision of the applicable startup, shutdown, or malfunction plan, or to satisfy the general duty to minimize emissions established by §63.6(e)(1)(i).

Diesel engine means any stationary RICE in which a high boiling point liquid fuel injected into the combustion chamber ignites when the air charge has been compressed to a temperature sufficiently high for auto-ignition. This process is also known as compression ignition.

Diesel fuel means any liquid obtained from the distillation of petroleum with a boiling point of approximately 150 to 360 degrees Celsius. One commonly used form is fuel oil number 2.

Digester gas means any gaseous by-product of wastewater treatment typically formed through the anaerobic decomposition of organic waste materials and composed principally of methane and CO_2.

Dual-fuel engine means any stationary RICE in which a liquid fuel (typically diesel fuel) is used for compression ignition and gaseous fuel (typically natural gas) is used as the primary fuel.

Emergency stationary RICE means any stationary RICE that operates in an emergency situation. Examples include stationary RICE used to produce power for critical networks or equipment (including power supplied to portions of a facility) when electric power from the local utility is interrupted, or stationary RICE used to pump water in the case of fire or flood, etc. Emergency stationary RICE may be operated for the purpose of maintenance checks and readiness testing, provided that the tests are recommended by the manufacturer, the vendor, or the insurance company associated with the engine. Required testing of such units should be minimized, but there is no time limit on the use of emergency stationary RICE in emergency situations and for routine testing and maintenance. Emergency stationary RICE may also operate an additional 50 hours per year in non-emergency situations.

Four-stroke engine means any type of engine which completes the power cycle in two crankshaft revolutions, with intake and compression strokes in the first revolution and power and exhaust strokes in the second revolution.

Gaseous fuel means a material used for combustion which is in the gaseous state at standard atmospheric temperature and pressure conditions.

Glycol dehydration unit means a device in which a liquid glycol (including, but not limited to, ethylene glycol, diethylene glycol, or triethylene glycol) absorbent directly contacts a natural gas stream and absorbs water in a contact tower or absorption column (absorber). The glycol contacts and absorbs water vapor and other gas stream constituents from the natural gas and becomes "rich" glycol. This glycol is then regenerated in the glycol dehydration unit reboiler. The "lean" glycol is then recycled.

Hazardous air pollutants (HAP) means any air pollutants listed in or pursuant to section 112(b) of the CAA.

ISO standard day conditions means 288 degrees Kelvin (15 degrees Celsius), 60 percent relative humidity and 101.3 kilopascals pressure.

Landfill gas means a gaseous by-product of the land application of municipal refuse typically formed through the anaerobic decomposition of waste materials and composed principally of methane and CO_2.

Lean burn engine means any two-stroke or four-stroke spark ignited engine that does not meet the definition of a rich burn engine.

Limited use stationary RICE means any stationary RICE that operates less than 100 hours per year.

Liquefied petroleum gas means any liquefied hydrocarbon gas obtained as a by-product in petroleum refining of natural gas production.

Liquid fuel means any fuel in liquid form at standard temperature and pressure, including but not limited to diesel, residual/crude oil, kerosene/ naphtha (jet fuel), and gasoline.

Major Source, as used in this subpart, shall have the same meaning as in §63.2, except that:

(1) Emissions from any oil or gas exploration or production well (with its associated equipment (as defined in this section)) and emissions from any pipeline compressor station or pump station shall not be aggregated with emissions from other similar units, to determine whether such emission points or stations are major sources, even when emission points are in a contiguous area or under common control;

(2) For oil and gas production facilities, emissions from processes, operations, or equipment that are not part of the same oil and gas production facility, as defined in §63.1271 of subpart HHH of this part, shall not be aggregated;

(3) For production field facilities, only HAP emissions from glycol dehydration units, storage vessel with the potential for flash emissions, combustion turbines and reciprocating internal combustion engines shall be aggregated for a major source determination; and

(4) Emissions from processes, operations, and equipment that are not part of the same natural gas transmission and storage facility, as defined in §63.1271 of subpart HHH of this part, shall not be aggregated.

Malfunction means any sudden, infrequent, and not reasonably preventable failure of air pollution control equipment, process equipment, or a process to operate in a normal or usual manner. Failures that are caused in part by poor maintenance or careless operation are not malfunctions.

Natural gas means a naturally occurring mixture of hydrocarbon and non-hydrocarbon gases found in geologic formations beneath the Earth's surface, of which the principal constituent is methane. May be field or pipeline quality.

Non-selective catalytic reduction (NSCR) means an add-on catalytic nitrogen oxides (NO_X) control device for rich burn engines that, in a two-step reaction, promotes the conversion of excess oxygen, NO_X, CO, and volatile organic compounds (VOC) into CO_2, nitrogen, and water.

Oil and gas production facility as used in this subpart means any grouping of equipment where hydrocarbon liquids are processed, upgraded (*i.e.*, remove impurities or other constituents to meet contract specifications), or stored prior to the point of custody transfer; or where natural gas is processed, upgraded, or stored prior to entering the natural gas transmission and storage source category. For purposes of a major source determination, facility (including a building, structure, or installation) means oil and natural gas production and processing equipment that is located within the boundaries of an individual surface site as defined in this section. Equipment that is part of a facility will typically be located within close proximity to other equipment located at the same facility. Pieces of production equipment or groupings of equipment located on different oil and gas leases, mineral fee tracts, lease tracts, subsurface or surface unit areas, surface fee tracts, surface lease tracts, or separate surface sites, whether or not connected by a road, waterway, power line or pipeline, shall not be considered part of the same facility. Examples of facilities in the oil and natural gas production source category include, but are not limited to, well sites, satellite tank

batteries, central tank batteries, a compressor station that transports natural gas to a natural gas processing plant, and natural gas processing plants.

Oxidation catalyst means an add-on catalytic control device that controls CO and VOC by oxidation.

Peaking unit or engine means any standby engine intended for use during periods of high demand that are not emergencies.

Percent load means the fractional power of an engine compared to its maximum manufacturer's design capacity at engine site conditions. Percent load may range between 0 percent to above 100 percent.

Potential to emit means the maximum capacity of a stationary source to emit a pollutant under its physical and operational design. Any physical or operational limitation on the capacity of the stationary source to emit a pollutant, including air pollution control equipment and restrictions on hours of operation or on the type or amount of material combusted, stored, or processed, shall be treated as part of its design if the limitation or the effect it would have on emissions is federally enforceable. For oil and natural gas production facilities subject to subpart HH of this part, the potential to emit provisions in §63.760(a) may be used. For natural gas transmission and storage facilities subject to subpart HHH of this part, the maximum annual facility gas throughput for storage facilities may be determined according to §63.1270(a)(1) and the maximum annual throughput for transmission facilities may be determined according to §63.1270(a)(2).

Production field facility means those oil and gas production facilities located prior to the point of custody transfer.

Production well means any hole drilled in the earth from which crude oil, condensate, or field natural gas is extracted.

Propane means a colorless gas derived from petroleum and natural gas, with the molecular structure C_3H_8.

Responsible official means responsible official as defined in 40 CFR 70.2.

Rich burn engine means any four-stroke spark ignited engine where the manufacturer's recommended operating air/fuel ratio divided by the stoichiometric air/fuel ratio at full load conditions is less than or equal to 1.1. Engines originally manufactured as rich burn engines, but modified prior to December 19, 2002 with passive emission control technology for NO_X (such as pre-combustion chambers) will be considered lean burn engines. Also, existing engines where there are no manufacturer's recommendations regarding air/fuel ratio will be considered a rich burn engine if the excess oxygen content of the exhaust at full load conditions is less than or equal to 2 percent.

Site-rated HP means the maximum manufacturer's design capacity at engine site conditions.

Spark ignition engine means a type of engine in which a compressed air/fuel mixture is ignited by a timed electric spark generated by a spark plug.

Stationary reciprocating internal combustion engine (RICE) means any reciprocating internal combustion engine which uses reciprocating motion to convert heat energy into mechanical work and which is not mobile. Stationary RICE differ from mobile RICE in that a stationary RICE is not a non-road engine as defined at 40 CFR 1068.30, and is not used to propel a motor vehicle or a vehicle used solely for competition.

Stationary RICE test cell/stand means an engine test cell/stand, as defined in subpart PPPPP of this part, that tests stationary RICE.

Stoichiometric means the theoretical air-to-fuel ratio required for complete combustion.

Storage vessel with the potential for flash emissions means any storage vessel that contains a hydrocarbon liquid with a stock tank gas-to-oil ratio equal to or greater than 0.31 cubic meters per liter and an American Petroleum Institute gravity equal to or greater than 40 degrees and an actual annual average hydrocarbon liquid throughput equal to or greater than 79,500 liters per day. Flash emissions occur when dissolved hydrocarbons in the fluid evolve from solution when the fluid pressure is reduced.

Subpart means 40 CFR part 63, subpart ZZZZ.

Surface site means any combination of one or more graded pad sites, gravel pad sites, foundations, platforms, or the immediate physical location upon which equipment is physically affixed.

Two-stroke engine means a type of engine which completes the power cycle in single crankshaft revolution by combining the intake and compression operations into one stroke and the power and exhaust operations into a second stroke. This system requires auxiliary scavenging and inherently runs lean of stoichiometric.

Tables to Subpart ZZZZ of Part 63

As stated in §§63.6600 and 63.6640, you must comply with the following emission limitations for existing, new and reconstructed 4SRB stationary RICE at 100 percent load plus or minus 10 percent:

TABLE 1a TO SUBPART ZZZZ OF PART 63 — EMISSION LIMITATIONS FOR EXISTING, NEW, AND RECONSTRUCTED SPARK IGNITION, 4SRB STATIONARY RICE

For each . . .	You must meet *one* of the following emission limitations . . .
1. 4SRB RICE	a. Reduce formaldehyde emissions by 76 percent or more. If you commenced construction or reconstruction between December 19, 2002 and June 15, 2004, you may reduce formaldehyde emissions by 75 percent or more until June 15, 2007, or b. Limit the concentration of formaldehyde in the stationary RICE exhaust to 350 ppbvd or less at 15 percent O_2.

As stated in §§63.6600, 63.6630 and 63.6640, you must comply with the following operating emission limitations for existing, new and reconstructed 4SRB stationary RICE:

TABLE 1B TO SUBPART ZZZZ OF PART 63 — OPERATING LIMITATIONS FOR EXISTING, NEW, AND RECONSTRUCTED SPARK IGNITION, 4SRB STATIONARY RICE

For each . .	You must meet the following emission limitation . . .
1 4SRB stationary RICE complying with the requirement to reduce formaldehyde emissions by 76 percent or more (or by 75 percent or more, if applicable) and using NSCR; or 4SRB stationary RICE complying with the requirement to limit the concentration of formaldehyde in the stationary RICE exhaust to 350 ppbvd or less at 15 percent O_2 and using NSCR.	a. Maintain your catalyst so that the pressure drop across the catalyst does not change by more than two inches of water at 100 percent load plus or minus 10 percent from the pressure drop across the catalyst measured during the initial performance test; and b. Maintain the temperature of your stationary RICE exhaust so that the catalyst inlet temperature is greater than or equal to 750°F and less than or equal to 1250°F.
2. 4SRB stationary RICE complying with the requirement to reduce formaldehyde emissions by 76 percent or more (or by 75 percent if applicable) and not using NSCR; or 4SRB stationary RICE complying with the requirement to limit the concentration of formaldehyde in the stationary RICE exhaust to 350 ppbvd or less at 15 percent O_2 and not using NSCR.	Comply with any operating limitations approved by the Administrator.

As stated in §§ 63.6600 and 63.6640, you must comply with the following emission limitations for new and reconstructed lean burn and new and reconstructed compression ignition stationary RICE at 100 percent load plus or minus 10 percent:

TABLE 2a TO SUBPART ZZZZ OF PART 63 — EMISSION LIMITATIONS FOR NEW AND RECONSTRUCTED LEAN BURN AND COMPRESSION IGNITION STATIONARY RICE

For each . . .	You must meet the following emission limitation . . .
1 2SLB stationary RICE	a. Reduce CO emissions by 58 percent or more, or b. Limit concentration of formaldehyde in the stationary RICE exhaust to 12 ppmvd or less at 15 percent O_2. If you commenced construction or reconstruction between December 19, 2002 and June 15, 2004, you may limit concentration of formaldehyde to 17 ppmvd or less at 15 percent O_2 until June 15, 2007.
2. 4SLB stationary RICE ...	a Reduce CO emissions by 93 percent or more; or b Limit concentration of formaldehyde in the stationary RICE exhaust to 14 ppmvd or less at 15 percent O_2.
3 CI stationary RICE	a Reduce CO emissions by 70 percent or more, or b Limit concentration of formaldehyde in the stationary RICE exhaust to 580 ppbvd or less at 15 percent O_2.

As stated in §§ 63.6600, 63.6630, and 63.6640, you must comply with the following operating limitations for new and reconstructed lean burn and new and reconstructed compression ignition stationary RICE:

TABLE 2b TO SUBPART ZZZZ OF PART 63 — OPERATING LIMITATIONS FOR NEW AND RECONSTRUCTED LEAN BURN AND COMPRESSION IGNITION STATIONARY RICE

For each . . .	You must meet the following operating limitation . .
1. 2SLB and 4SLB stationary RICE and CI stationary RICE complying with the requirement to reduce CO emissions and using an oxidation catalyst; or 2SLB and 4SLB stationary RICE and CI stationary RICE complying with the requirement to limit the concentration of formaldehyde in the stationary RICE exhaust and using an oxidation catalyst.	a. Maintain your catalyst so that the pressure drop across the catalyst does not change by more than two inches of water at 100 percent load plus or minus 10 percent from the pressure drop across the catalyst that was measured during the initial performance test; and b. Maintain the temperature of your stationary RICE exhaust so that the catalyst inlet temperature is greater than or equal to 450°F and less than or equal to 1350°F.
2. 2SLB and 4SLB stationary RICE and CI stationary RICE complying with the requirement to reduce CO emissions and not using an oxidation catalyst; or 2SLB and 4SLB stationary RICE and CI stationary RICE complying with the requirement to limit the concentration of formaldehyde in the stationary RICE exhaust and not using an oxidation catalyst.	Comply with any operating limitations approved by the Administrator.

As stated in §§ 63.6615 and 63.6620, you must comply with the following subsequent performance test requirements:

TABLE 3 TO SUBPART ZZZZ OF PART 63 — SUBSEQUENT PERFORMANCE TESTS

For each . . .	Complying with the requirement to . . .	You must . . .
1. 2SLB and 4SLB stationary RICE and CI stationary RICE.	Reduce CO emissions and not using a CEMS	Conduct subsequent performance tests semi-annually.[1]
2. 4SRB stationary RICE with a brake horsepower ≥ 5,000.	Reduce formaldehyde emissions	Conduct subsequent performance tests semi-annually.[1]
3. Stationary RICE (all stationary RICE subcategories and all brake horsepower ratings).	Limit the concentration of formaldehyde in the stationary RICE exhaust.	Conduct subsequent performance tests semi-annually.[1]

[1] After you have demonstrated compliance for two consecutive tests, you may reduce the frequency of subsequent performance tests to annually. If the results of any subsequent annual performance test indicate the stationary RICE is not in compliance with the CO or formaldehyde emission limitation, or you deviate from any of your operating limitations, you must resume semiannual performance tests.

As stated in §§ 63.6610, 63.6620, and 63.6640, you must comply with the following requirements for performance tests:

TABLE 4 TO SUBPART ZZZZ OF PART 63 — REQUIREMENTS FOR PERFORMANCE TESTS

For each . .	Complying with the requirement to	You must . .	Using . .	According to the following requirements
1. 2SLB and 4SLB stationary RICE and CI stationary RICE.	a. Reduce CO emissions	i. Measure the O_2 at the inlet and outlet of the control device; and	(1) Portable CO and O_2 analyzer.	(a) Using ASTM D6522–00 [1] (incorporated by reference, see §63.14). Measurements to determine O_2 must be made at the same time as the measurements for CO concentration.
		ii. Measure the CO at the inlet and the outlet of the control device.	(1) Portable CO and O_2 analyzer.	(a) Using ASTM D6522–00 [1] (incorporated by reference, see § 63.14). The CO concentration must be at 15 percent O_2, dry basis.
2. 4SRB stationary RICE	a. Reduce formaldehyde emissions.	i. Select sampling port location and the number of traverse points; and	(1) Method 1 or 1A of 40 CFR part 60 appendix A § 63.7(d)(1)(i).	(a) Sampling sites must be located at the inlet and outlet of the control device.
		ii. Measure O_2 at the inlet and outlet of the control device; and	(1) Method 3 or 3A or 3B of 40 CFR part 60, appendix A.	(a) Measurements to determine O_2 concentration must be made at the same time as the measurements for formaldehyde concentration.
		(iii) Measure moisture content at the inlet and outlet of the control device; and	(1) Method 4 of 40 CFR part 60, appendix A, or Test Method 320 of 40 CFR part 63, appendix A, or ASTM D 6348–03.	(a) Measurements to determine moisture content must be made at the same time and location as the measurements for formaldehyde concentration.
		(iv) Measure formaldehyde at the inlet and the outlet of the control device	(1) Method 320 or 323 of 40 CFR part 63, appendix A; or ASTM D6348-03 [2], provided in ASTM D6348-03 Annex A5 (Analyte Spiking Technique), the percent R must be greater than or equal to 70 and less than or equal to 130.	(a) Formaldehyde concentration must be at 15 percent O_2, dry basis. Results of this test consist of the average of the three 1-hour or longer runs.
3. Stationary RICE	a. Limit the concentration of formaldehyde in the stationary RICE exhaust.	(i) Select the sampling port location and the number of traverse points; and	(1) Method 1 or 1A of 40 CFR part 60, appendix A §63.7(d)(1)(i).	(a) If using a control device, the sampling site must be located at the outlet of the control device.
		(ii) Determine the O_2 concentration of the stationary RICE exhaust at the sampling port location; and	(1) Method 3 or 3A or 3B of 40 CFR part 60, appendix A.	(a) Measurements to determine O_2 concentration must be made at the same time and location as the measurements for formaldehyde concentration.
		(iii) Measure moisture content of the stationary RICE exhaust at the sampling port location; and	(1) Method 4 of 40 CFR part 60, appendix A, or Test Method 320 of 40 CFR part 63, appendix A, or ASTM D 6348–03.	(a) Measurements to determine moisture content must be made at the same time and location as the measurements for formaldehyde concentration.
		(iv) Measure formaldehyde at the exhaust of the stationary RICE	(1) Method 320 or 323 of 40 CFR part 63, appendix A; or ASTM D6348–03 [2], provided in ASTM D6348-03 Annex A5 (Analyte Spiking Technique), the percent R must be greater than or equal to 70 and less than or equal to 130.	(a) Formaldehyde concentration must be at 15 percent O_2, dry basis. Results of this test consist of the average of the three 1-hour or longer runs.

[1] You may also use Methods 3A and 10 as options to ASTM–D6522–00. You may obtain a copy of ASTM-D6522-00 from at least one of the following addresses: American Society for Testing and Materials, 100 Barr Harbor Drive, West Conshohochen, PA 19428–2959, or University Microfilms International, 300 North Zeeb Road, Ann Arbor, MI 48106.

[2] You may obtain a copy of ASTM–D6348–03 from at least one of the following addresses: American Society for Testing and Materials, 100 Barr Harbor Drive, West Conshohochen, PA 19428-2959, or University Microfilms International, 300 North Zeeb Road, Ann Arbor, MI 48106.

As stated in §§63.6625 and 63.6630, you must initially comply with the emission and operating limitations as required by the following:

TABLE 5 TO SUBPART ZZZZ OF PART 63 — INITIAL COMPLIANCE WITH EMISSION LIMITATIONS AND OPERATING LIMITATIONS

For each . . .	Complying with the requirement to . . .	You have demonstrated initial compliance if
1. 2SLB and 4SLB stationary RICE and CI stationary RICE.	a. Reduce CO emissions and using oxidation catalyst, and using a CPMS.	i. The average reduction of emissions of CO determined from the initial performance test achieves the required CO percent reduction; and ii. You have installed a CPMS to continuously monitor catalyst inlet temperature according to the requirements in §63.6625(b); and iii. You have recorded the catalyst pressure drop and catalyst inlet temperature during the initial performance test.
2. 2SLB and 4SLB stationary RICE and CI stationary RICE.	a. Reduce CO emissions and not using oxidation catalyst.	i. The average reduction of emissions of CO determined from the initial performance test achieves the required CO percent reduction; and ii. You have installed a CPMS to continuously monitor operating parameters approved by the Administrator (if any) according to the requirements in §63.6625(b); and iii. You have recorded the approved operating parameters (if any) during the initial performance test.
3. 2SLB and 4SLB stationary RICE and CI stationary RICE.	a. Reduce CO emissions, and using a CEMS	i. You have installed a CEMS to continuously monitor CO and either O_2 or CO_2 at both the inlet and outlet of the oxidation catalyst according to the requirements in §63.6625(a); and ii. You have conducted a performance evaluation of your CEMS using PS 3 and 4A of 40 CFR part 60, appendix B; and iii. The average reduction of CO calculated using §63.6620 equals or exceeds the required percent reduction. The initial test comprises the first 4-hour period after successful validation of the CEMS. Compliance is based on the average percent reduction achieved during the 4-hour period.
4. 4SRB stationary RICE	a. Reduce formaldehyde emissions and using NSCR.	i. The average reduction of emissions of formaldehyde determined from the initial performance test is equal to or greater than the required formaldehyde percent reduction; and ii. You have installed a CPMS to continuously monitor catalyst inlet temperature according to the requirements in §63.6625(b); and iii. You have recorded the catalyst pressure drop and catalyst iniet temperature during the initial performance test.
5. 4SRB stationary RICE	a. Reduce formaldehyde emissions and not using NSCR.	i. The average reduction of emissions of formaldehyde determined from the initial performance test is equal to or greater than the required formaldehyde percent reduction; and ii. You have installed a CPMS to continuously monitor operating parameters approved by the Administrator (if any) according to the requirements in §63.6625(b); and iii. You have recorded the approved operating parameters (if any) during the initial performance test.
6. Stationary RICE	a. Limit the concentration of formaldehyde in the stationary RICE exhaust and using oxidation catalyst or NSCR.	i. The average formaldehyde concentration, corrected to 15 percent O_2, dry basis, from the three test runs is less than or equal to the formaldehyde emission limitation; and ii. You have installed a CPMS to continuously monitor catalyst inlet temperature according to the requirements in §63.6625(b); and iii. You have recorded the catalyst pressure drop and catalyst inlet temperature during the initial performance test.
7. Stationary RICE	a. Limit the concentration of formaldehyde in the stationary RICE exhaust and not using oxidation catalyst or NSCR.	i. The average formaldehyde concentration, corrected to 15 percent O_2, dry basis, from the three test runs is less than or equal to the formaldehyde emission limitation; and ii. You have installed a CPMS to continuously monitor operating parameters approved by the Administrator (if any) according to the requirements in §63.6625(b); and iii. You have recorded the approved operating parameters (if any) during the initial performance test.

As stated in § 63.6640, you must continuously comply with the emissions and operating limitations as required by the following:

TABLE 6 TO SUBPART ZZZZ OF PART 63 — CONTINUOUS COMPLIANCE WITH EMISSION LIMITATIONS AND OPERATING LIMITATIONS

For each .	Complying with the requirement to . . .	You must demonstrate continuous compliance by . . .
1. 2SLB and 4SLB stationary RICE and CI stationary RICE.	a. Reduce CO emissions and using an oxidation catalyst, and using a CPMS.	i. Conducting semiannual performance tests for CO to demonstrate that the required CO percent reduction is achieved [1]; and ii. Collecting the catalyst inlet temperature data according to §63.6625(b); and iii. Reducing these data to 4-hour rolling averages; and iv. Maintaining the 4-hour rolling averages within the operating limitations for the catalyst inlet temperature; and v. Measuring the pressure drop across the catalyst once per month and demonstrating that the pressure drop across the catalyst is within the operating limitation established during the performance test.
2. 2SLB and 4SLB stationary RICE and CI stationary RICE	a. Reduce CO emissions and not using an oxidation catalyst, and using a CPMS.	i. Conducting semiannual performance tests for CO to demonstrate that the required CO percent reduction is achieved [1]; and ii. Collecting the approved operating parameter (if any) data according to §63.6625(b); and iii. Reducing these data to 4-hour rolling averages; and iv. Maintaining the 4-hour rolling averages within the operating limitations for the operating parameters established during the performance test.
3. 2SLB and 4SLB stationary RICE and CI stationary RICE.	a. Reduce CO emissions and using a CEMS	i Collecting the monitoring data according to §63.6625(a), reducing the measurements to 1-hour averages, calculating the percent reduction of CO emissions according to §63.6620; and ii. Demonstrating that the catalyst achieves the required percent reduction of CO emissions over the 4-hour averaging period; and iii. Conducting an annual RATA of your CEMS using PS 3 and 4A of 40 CFR part 60, appendix B, as well as daily and periodic data quality checks in accordance with 40 CFR part 60, appendix F, procedure 1.
4. 4SRB stationary RICE	a. Reduce formaldehyde emissions and using NSCR.	i Collecting the catalyst inlet temperature data according to § 63.6625(b); and ii. Reducing these data to 4-hour rolling averages; and iii. Maintaining the 4-hour rolling averages within the operating limitations for the catalyst inlet temperature; and iv Measuring the pressure drop across the catalyst once per month and demonstrating that the pressure drop across the catalyst is within the operating limitation established during the performance test.
5. 4SRB stationary RICE	a. Reduce formaldehyde emissions and not using NSCR.	i. Collecting the approved operating parameter (if any) data according to §63.6625(b); and ii. Reducing these data to 4-hour rolling averages; iii. Maintaining the 4-hour rolling averages within the operating limitations for the operating parameters established during the performance test.
6. 4SRB stationary RICE with a brake horsepower ≥ 5,000.	a. Reduce formaldehyde emissions	Conducting semiannual performance tests for formaldehyde to demonstrate that the required formaldehyde percent reduction is achieved [1].
7. Stationary RICE	a. Limit the concentration of formaldehyde in the stationary RICE exhaust and using oxidation catalyst or NSCR.	i. Conducting semiannual performance tests for formaldehyde to demonstrate that your emissions remain at or below the formaldehyde concentration limit [1]; and ii. Collecting the catalyst inlet temperature data according to §63.6625(b); and iii. Reducing these data to 4-hour rolling averages; and iv. Maintaining the 4-hour rolling averages within the operating limitations for the catalyst inlet temperature; and v. Measuring the pressure drop across the catalyst once per month and demonstrating that the pressure drop across the catalyst is within the operating limitation established during the performance test.
8. Stationary RICE	a. Limit the concentration of formaldehyde in the stationary RICE exhaust and not using oxidation catalyst or NSCR.	i. Conducting semiannual performance tests for formaldehyde to demonstrate that your emissions remain at or below the formaldehyde concentration limit [1]; and ii. Collecting the approved operating parameter (if any) data according to §63.6625(b); and ii. Reducing these data to 4-hour rolling averages; and iii. Maintaining the 4-hour rolling averages within the operating limitations for the operating parameters established during the performance test.

[1] After you have demonstrated compliance for two consecutive tests, you may reduce the frequency of subsequent performance tests to annually. If the results of any subsequent annual performance test indicate the stationary RICE is not in compliance with the CO or formaldehyde emission limitation, or you deviate from any of your operating limitations, you must resume semiannual performance tests.

As stated in § 63.6650, you must comply with the following requirements for reports:

TABLE 7 TO SUBPART ZZZZ OF PART 63 — REQUIREMENTS FOR REPORTS

You must submit a(n)	The report must contain . . .	You must submit the report . . .
1. Compliance report	a. If there are no deviations from any emission limitations or operating limitations that apply to you, a statement that there were no deviations from the emission limitations or operating limitations during the reporting period. If there were no periods during which the CMS, including CEMS and CPMS, was out-of-control, as specified in §63.8(c)(7), a statement that there were not periods during which the CMS was out-of control during the reporting period; or	i. Semiannually according to the requirements in §63.6650(b).
	b. If you had a deviation from any emission limitation or operating limitation during the reporting period, the information in §63.6650(d). If there were periods during which the CMS, including CEMS and CPMS, was out-of-control, as specified in §63.8(c)(7), the information in §63.6650(e); or	i. Semiannually according to the requirements §63. in 6650(b).
	c. If you had a startup, shutdown or malfunction during the reporting period, the information in §63.10(d)(5)(i).	i. Semiannually according to the requirements in §63.6650(b).
2. An immediate startup, shutdown, and malfunction report if actions addressing the startup, shutdown, or malfunction were inconsistent with your startup, shutdown, or malfunction plan during the reporting period.	a. Actions taken for the event; and	i. By fax or telephone within 2 working days after starting actions inconsistent with the plan.
	b. The information in §63.10(d)(5)(ii).	i. By letter within 7 working days after the end of the event unless you have made alternative arrangements with the permitting authorities. (§63.10(d)(5)(ii))
3. Report	a. The fuel flow rate of each fuel and the heating values that were used in your calculations, and you must demonstrate that the percentage of heat input provided by landfill gas or digester gas, is equivalent to 10 percent or more of the gross heat input on an annual basis; and	i. Annually, according to the requirements in §63.6650
	b. The operating limits provided in your federally enforceable permit, and any deviations from these limits; and	i. See item 3.a.i.
	c. Any problems or errors suspected with the meters.	i. See item 3.a.i.

As stated in § 63.6665, you must comply with the following applicable general provisions:

TABLE 8 TO SUBPART ZZZZ OF PART 63 — APPLICABILITY OF GENERAL PROVISIONS TO SUBPART ZZZ

General provisions citation	Subject of citation	Applies to subpart	Explanation
§ 63.1	General applicability of the General Provisions	Yes.	
§ 63.2	Definitions	Yes.	Additional terms defined in §63.6675.
§ 63.3	Units and abbreviations	Yes.	
§ 63.4	Prohibited activities and circumvention	Yes.	
§ 63.5	Construction and reconstruction	Yes.	
§ 63.6(a)	Applicability	Yes.	
§ 63.6(b)(1)–(4)	Compliance dates for new and reconstructed sources	Yes.	
§ 63.6(b)(5)	Notification	Yes.	
§ 63.6(b)(6)	[Reserved].	.	
§ 63.6(b)(7)	Compliance dates for new and reconstructed area sources that become major sources	Yes.	
§ 63.6(c)(1)–(2)	Compliance dates for existing sources	Yes.	
§ 63.6(c)(3)–(4)	[Reserved].	.	
§ 63.6(c)(5)	Compliance dates for existing area sources that become major sources.	Yes.	
§ 63.6(d)	[Reserved].	.	
§ 63.6(e)(1)	Operation and maintenance	Yes.	
§ 63.6(e)(2)	[Reserved].	.	

General provisions citation	Subject of citation	Applies to subpart	Explanation
§ 63.6(e)(3)	Startup, shutdown, and malfunction plan	Yes.	
§ 63.6(f)(1)	Applicability of standards except during startup shutdown malfunction (SSM).	Yes.	
§ 63.6(f)(2)	Methods for determining compliance	Yes.	
§ 63.6(f)(3)	Finding of compliance	Yes.	
§ 63.6(g)(1)-(3)	Use of alternate standard	Yes.	
§ 63.6(h)	Opacity and visible emission standards	No	Subpart ZZZZ does not contain opacity or visible emission standards.
§ 63.6(i)	Compliance extension procedures and criteria.	Yes.	
§ 63.6(j)	Presidential compliance exemption	Yes	
§ 63.7(a)(1)-(2)	Performance test dates	Yes	Subpart ZZZZ contains performance test dates at §63.6610.
§ 63.7(a)(3)	CAA section 114 authority	Yes	
§ 63.7(b)(1)	Notification of performance test	Yes	
§ 63.7(b)(2)	Notification of rescheduling	Yes	
§ 63.7(c)	Quality assurance/test plan	Yes	
§ 63.7(d)	Testing facilities	Yes	
§ 63.7(e)(1)	Conditions for conducting performance tests.	Yes	
§ 63.7(e)(2)	Conduct of performance tests and reduction of data.	Yes	Subpart ZZZZ specifies test methods at §63.6620.
§ 63.7(e)(3)	Test run duration	Yes	
§ 63.7(e)(4)	Administrator may require other testing under section 114 of the CAA.	Yes	
§ 63.7(f)	Alternative test method provisions	Yes	
§ 63.7(g)	Performance test data analysis, recordkeeping, and reporting.	Yes	
§ 63.7(h)	Waiver of tests	Yes	
§ 63.8(a)(1)	Applicability of monitoring requirements	Yes	Subpart ZZZZ contains specific requirements for monitoring at §63.6625.
§ 63.8(a)(2)	Performance specifications	Yes	
§ 63.8(a)(3)	[Reserved]		
§ 63.8(a)(4)	Monitoring for control devices	No	
§ 63.8(b)(1)	Monitoring	Yes	
§ 63.8(b)(2)-(3)	Multiple effluents and multiple monitoring systems	Yes	
§ 63.8(c)(1)	Monitoring system operation and maintenance.	Yes	
§ 63.8(c)(1)(i)	Routine and predictable SSM	Yes	
§ 63.8(c)(1)(ii)	SSM not in Startup Shutdown Malfunction Plan.	Yes	
§ 63.8(c)(1)(iii)	Compliance with operation and maintenance requirements.	Yes	
§ 63.8(c)(2)-(3)	Monitoring system installation	Yes	
§ 63.8(c)(4)	Continuous monitoring system (CMS) requirements.	Yes	Except that subpart ZZZZ does not require Continuous Opacity Monitoring System (COMS).
§ 63.8(c)(5)	COMS minimum procedures	No	Subpart ZZZZ does not require COMS.
§ 63.8(c)(6)-(8)	CMS requirements	Yes	Except that subpart ZZZZ does not require COMS.
§ 63.8(d)	CMS quality control	Yes	
§ 63.8(e)	CMS performance evaluation	Yes	Except for §63.8(e)(5)(ii), which applies to COMS.
§ 63.8(f)(1)-(5)	Alternative monitoring method	Yes	
§ 63.8(f)(6)	Alternative to relative accuracy test	Yes	
§ 63.8(g)	Data reduction	Yes	Except that provisions for COMS are not applicable. Averaging periods for demonstrating compliance are specified at §§ 63.6635 and 63.6640
§ 63.9(a)	Applicability and State delegation of notification requirements.	Yes	

General provisions citation	Subject of citation	Applies to subpart	Explanation
§ 63.9(b)(1)–(5)	Initial notifications	Yes	Except that §63.9(b)(3) is reserved.
§ 63.9(c)	Request for compliance extension	Yes	
§ 63.9(d)	Notification of special compliance requirements for new sources.	Yes	
§ 63.9(e)	Notification of performance test	Yes	
§ 63.9(f)	Notification of visible emission (VE)/opacity test.	No	Subpart ZZZZ does not contain opacity or VE standards.
§ 63.9(g)(1)	Notification of performance evaluation	Yes	
§ 63.9(g)(2)	Notification of use of COMS data	No	Subpart ZZZZ does not contain opacity or VE standards.
§ 63.9(g)(3)	Notification that criterion for alternative to RATA is exceeded.	Yes	If alternative is in use.
§ 63.9(h)(1)–(6)	Notification of compliance status	Yes	Except that notifications for sources using a CEMS are due 30 days after completion of performance evaluations. §63.9(h)(4) is reserved.
§ 63.9(i)	Adjustment of submittal deadlines	Yes	
§ 63.9(j)	Change in previous information	Yes	
§ 63.10(a)	Administrative provisions for record keeping/reporting.	Yes.	
§ 63.10(b)(1)	Record retention	Yes.	
§ 63.10(b)(2)(i)–(v)	Records related to SSM	Yes.	
§ 63.10(b)(2)(vi)–(xi)	Records	Yes.	
§ 63.10(b)(2)(xii)	Record when under waiver	Yes.	
§ 63.10(b)(2)(xiii)	Records when using alternative to RATA	Yes	For CO standard if using RATA alternative
§ 63.10(b)(2)(xiv)	Records of supporting documentation	Yes.	
§ 63.10(b)(3)	Records of applicability determination	Yes.	
§ 63.10(c)	Additional records for sources using CEMS.	Yes	Except that §63.10(c)(2)–(4) and (9) are reserved.
§ 63.10(d)(1)	General reporting requirements	Yes.	
§ 63.10(d)(2)	Report of performance test results	Yes.	
§ 63.10(d)(3)	Reporting opacity or VE observations	No	Subpart ZZZZ does not contain opacity or VE standards.
§ 63.10(d)(4)	Progress reports	Yes.	
§ 63.10(d)(5)	Startup, shutdown, and malfunction reports	Yes.	
§ 63.10(e)(1) and (2)(i)	Additional CMS reports	Yes.	
§ 63.10(e)(2)(ii)	COMS-related report	No	Subpart ZZZZ does not require COMS.
§ 63.10(e)(3)	Excess emission and parameter exceedances reports.	Yes	Except that §63.10(e)(3)(i)(C) is reserved.
§ 63.10(e)(4)	Reporting COMS data	No	Subpart ZZZZ does not require COMS.
§ 63.10(f)	Waiver for recordkeeping/reporting	Yes.	
§ 63.11	Flares	No.	
§ 63.12	State authority and delegations	Yes.	
§ 63.13	Addresses	Yes.	
§ 63.14	Incorporation by reference	Yes.	
§ 63.15	Availability of information	Yes.	

[FR Doc. 04-4819 Filed 6-14-04; 8:45 am]

APPENDIX R (Modified July 24, 2006)

40 CFR 63 SUBPART DDDDD

Subpart DDDDD—National Emission Standards for Hazardous Air Pollutants for Industrial, Commercial, and Institutional Boilers and Process Heaters

What This Subpart Covers

§63.7480 What is the purpose of this subpart?

This subpart establishes national emission limits and work practice standards for hazardous air pollutants (HAP) emitted from industrial, commercial, and institutional boilers and process heaters. This subpart also establishes requirements to demonstrate initial and continuous compliance with the emission limits and work practice standards.

§63.7485 Am I subject to this subpart?

You are subject to this subpart if you own or operate an industrial, commercial, or institutional boiler or process heater as defined in §63.7575 that is located at, or is part of, a major source of HAP as defined in §63.2 or §63.761 (40 CFR part 63, subpart HH, National Emission Standards for Hazardous Air Pollutants from Oil and Natural Gas Production Facilities), except as specified in §63.7491.

§63.7490 What is the affected source of this subpart?

(a) This subpart applies to new, reconstructed, or existing affected sources as described in paragraphs (a)(1) and (2) of this section.

(1) The affected source of this subpart is the collection of all existing industrial, commercial, and institutional boilers and process heaters within a subcategory located at a major source as defined in §63.7575.

(2) The affected source of this subpart is each new or reconstructed industrial, commercial, or institutional boiler or process heater located at a major source as defined in §63.7575.

(b) A boiler or process heater is new if you commence construction of the boiler or process heater after January 13, 2003, and you meet the applicability criteria at the time you commence construction.

(c) A boiler or process heater is reconstructed if you meet the reconstruction criteria as defined in §63.2, you commence reconstruction after January 13, 2003, and you meet the applicability criteria at the time you commence reconstruction.

(d) A boiler or process heater is existing if it is not new or reconstructed.

§63.7491 Are any boilers or process heaters not subject to this subpart?

The types of boilers and process heaters listed in paragraphs (a) through (o) of this section are not subject to this subpart.

(a) A municipal waste combustor covered by 40 CFR part 60, subpart AAAA, subpart BBBB, subpart Cb or subpart Eb.

(b) A hospital/medical/infectious waste incinerator covered by 40 CFR part 60, subpart Ce or subpart Ec.

(c) An electric utility steam generating unit that is a fossil fuel-fired combustion unit of more than 25 megawatts that serves a generator that produces electricity for sale. A fossil fuel-fired unit that cogenerates steam and electricity, and supplies more than one-third of its potential electric output capacity, and more than 25 megawatts electrical output to any utility power distribution system for sale is considered an electric utility steam generating unit.

(d) A boiler or process heater required to have a permit under section 3005 of the Solid Waste Disposal Act or covered by 40 CFR part 63, subpart EEE (*e.g.*, hazardous waste boilers).

(e) A commercial and industrial solid waste incineration unit covered by 40 CFR part 60, subpart CCCC or subpart DDDD.

(f) A recovery boiler or furnace covered by 40 CFR part 63, subpart MM.

(g) A boiler or process heater that is used specifically for research and development. This does not include units that only provide heat or steam to a process at a research and development facility.

(h) A hot water heater as defined in this subpart.

(i) A refining kettle covered by 40 CFR part 63, subpart X.

(j) An ethylene cracking furnace covered by 40 CFR part 63, subpart YY.

(k) Blast furnace stoves as described in the EPA document, entitled "National Emission Standards for Hazardous Air Pollutants (NESHAP) for Integrated Iron and Steel Plants— Background Information for Proposed Standards," (EPA–453/R–01–005).

(l) Any boiler and process heater specifically listed as an affected source in another standard(s) under 40 CFR part 63.

(m) Any boiler and process heater specifically listed as an affected source in another standard(s) established under section 129 of the Clean Air Act (CAA).

(n) Temporary boilers as defined in this subpart.

(o) Blast furnace gas fuel-fired boilers and process heaters as defined in this subpart.

§63.7495 When do I have to comply with this subpart?

(a) If you have a new or reconstructed boiler or process heater, you must comply with this subpart by November 12, 2004 or upon startup of your boiler or process heater, whichever is later.

(b) If you have an existing boiler or process heater, you must comply with this subpart no later than September 13, 2007.

(c) If you have an area source that increases its emissions or its potential to emit such that it becomes a major source of HAP, paragraphs (c)(1) and (2) of this section apply to you.

(1) Any new or reconstructed boiler or process heater at the existing facility must be in compliance with this subpart upon startup.

(2) Any existing boiler or process heater at the existing facility must be in compliance with this subpart within 3 years after the facility becomes a major source.

(d) You must meet the notification requirements in §63.7545 according to the schedule in §63.7545 and in subpart A of this part. Some of the notifications must be submitted before you are required to comply with the emission limits and work practice standards in this subpart.

Emission Limits and Work Practice Standards

§63.7499 What are the subcategories of boilers and process heaters?

The subcategories of boilers and process heaters are large solid fuel, limited use solid fuel, small solid fuel, large liquid fuel, limited use liquid fuel, small liquid fuel, large gaseous fuel, limited use gaseous fuel, and small gaseous fuel. Each subcategory is defined in §63.7575.

§63.7500 What emission limits, work practice standards, and operating limits must I meet?

(a) You must meet the requirements in paragraphs (a)(1) and (2) of this section.

(1) You must meet each emission limit and work practice standard in Table 1 to this subpart that applies to your boiler or process heater, except as provided under §63.7507.

(2) You must meet each operating limit in Tables 2 through 4 to this subpart that applies to your boiler or process heater. If you use a control device or combination of control devices not covered in Tables 2 through 4 to this subpart, or you wish to establish and monitor an alternative operating limit and alternative monitoring parameters, you must apply to the United States Environmental Protection Agency (EPA) Administrator for approval of alternative monitoring under §63.8(f).

(b) As provided in §63.6(g), EPA may approve use of an alternative to the work practice standards in this section.

General Compliance Requirements

§63.7505 What are my general requirements for complying with this subpart?

(a) You must be in compliance with the emission limits (including operating limits) and the work practice standards in this subpart at all times, except during periods of startup, shutdown, and malfunction.

(b) You must always operate and maintain your affected source, including air pollution control and monitoring equipment, according to the provisions in §63.6(e)(1)(i).

(c) You can demonstrate compliance with any applicable emission limit using fuel analysis if the emission rate calculated according to §63.7530(d) is less than the applicable emission limit. Otherwise, you must demonstrate compliance using performance testing.

(d) If you demonstrate compliance with any applicable emission limit through performance testing, you must develop a site-specific monitoring plan according to the requirements in paragraphs (d)(1) through (4) of this section. This requirement also applies to you if you petition the EPA Administrator for alternative monitoring parameters under §63.8(f).

(1) For each continuous monitoring system (CMS) required in this section, you must develop and submit to the EPA Administrator for approval a site-specific monitoring plan that addresses paragraphs (d)(1)(i) through (iii) of this section. You must submit this site-specific monitoring plan at least 60 days before your initial performance evaluation of your CMS.

(i) Installation of the CMS sampling probe or other interface at a measurement location relative to each affected process unit such that the measurement is representative of control of the exhaust emissions (*e.g.*, on or downstream of the last control device);

(ii) Performance and equipment specifications for the sample interface, the pollutant concentration or parametric signal analyzer, and the data collection and reduction systems; and

(iii) Performance evaluation procedures and acceptance criteria (*e.g.*, calibrations).

(2) In your site-specific monitoring plan, you must also address paragraphs (d)(2)(i) through (iii) of this section.

(i) Ongoing operation and maintenance procedures in accordance with the general requirements of §63.8(c)(1), (c)(3), and (c)(4)(ii);

(ii) Ongoing data quality assurance procedures in accordance with the general requirements of §63.8(d); and

(iii) Ongoing recordkeeping and reporting procedures in accordance with the general requirements of §63.10(c), (e)(1), and (e)(2)(i).

(3) You must conduct a performance evaluation of each CMS in accordance with your site-specific monitoring plan.

(4) You must operate and maintain the CMS in continuous operation according to the site-specific monitoring plan.

(e) If you have an applicable emission limit or work practice standard, you must develop and implement a written startup, shutdown, and malfunction plan (SSMP) according to the provisions in §63.6(e)(3).

§63.7506 Do any boilers or process heaters have limited requirements?

(a) New or reconstructed boilers and process heaters in the large liquid fuel subcategory or the limited use liquid fuel subcategory that burn only fossil fuels and other gases and do not burn any residual oil are subject to the emission limits and applicable work practice standards in Table 1 to this subpart. You are not required to conduct a performance test to demonstrate compliance with the emission limits. You are not required to set and maintain operating limits to demonstrate continuous compliance with the emission limits. However, you must meet the requirements in paragraphs (a)(1) and (2) of this section and meet the CO work practice standard in Table 1 to this subpart.

(1) To demonstrate initial compliance, you must include a signed statement in the Notification of Compliance Status report required in §63.7545(e) that indicates you burn only liquid fossil fuels other than residual oils, either alone or in combination with gaseous fuels.

(2) To demonstrate continuous compliance with the applicable emission limits, you must also keep records that demonstrate that you burn only liquid fossil fuels other than residual oils, either alone or in combination with gaseous fuels. You must also include a signed statement in each semiannual compliance report required in §63.7550 that indicates you burned only liquid fossil fuels other than residual oils, either alone or in combination with gaseous fuels, during the reporting period.

(b) The affected boilers and process heaters listed in paragraphs (b)(1) through (3) of this section are subject to only the initial notification requirements in §63.9(b) (*i.e.*, they are not subject to the emission limits, work practice standards, performance testing, monitoring, SSMP, site-specific monitoring plans, recordkeeping and reporting requirements of this subpart or any other requirements in subpart A of this part).

(1) Existing large and limited use gaseous fuel units.

(2) Existing large and limited use liquid fuel units.

(3) New or reconstructed small liquid fuel units that burn only gaseous fuels or distillate oil. New or reconstructed small liquid fuel boilers and process heaters that commence burning of any other type of liquid fuel must comply with all applicable requirements of this subpart and subpart A of this part upon startup of burning the other type of liquid fuel.

(c) The affected boilers and process heaters listed in paragraphs (c)(1) through (4) of this section are not subject to the initial notification requirements in §63.9(b) and are not subject to any requirements in this subpart or in subpart A of this part (*i.e.*, they are not subject to the emission limits, work practice standards, performance testing, monitoring, SSM plans, site-specific monitoring plans, recordkeeping and reporting requirements of this subpart, or any other requirements in subpart A of this part.

(1) Existing small solid fuel boilers and process heaters.

(2) Existing small liquid fuel boilers and process heaters.

(3) Existing small gaseous fuel boilers and process heaters.

(4) New or reconstructed small gaseous fuel units.

§63.7507 What are the health-based compliance alternatives for the hydrogen chloride (HCl) and total selected metals (TSM) standards?

(a) As an alternative to the requirement for large solid fuel boilers located at a single facility to demonstrate compliance with the HCl emission limit in Table 1 to this subpart, you may demonstrate eligibility for the health-based compliance alternative for HCl emissions under the procedures prescribed in appendix A to this subpart.

(b) In lieu of complying with the TSM emission standards in Table 1 to this subpart based on the sum of emissions for the eight selected metals, you may demonstrate eligibility for complying with the TSM emission standards in Table 1 based on the sum of emissions for seven selected metals (by excluding manganese emissions from the summation of TSM emissions) under the procedures prescribed in appendix A to this subpart.

Testing, Fuel Analyses, and Initial Compliance Requirements

§63.7510 What are my initial compliance requirements and by what date must I conduct them?

(a) For affected sources that elect to demonstrate compliance with any of the emission limits of this subpart through performance testing, your initial compliance requirements include conducting performance tests according to §63.7520 and Table 5 to this subpart, conducting a fuel analysis for each type of fuel burned in your boiler or process heater according to §63.7521 and Table 6 to this subpart, establishing operating limits according to §63.7530 and Table 7 to this subpart, and conducting CMS performance evaluations according to §63.7525.

(b) For affected sources that elect to demonstrate compliance with the emission limits for HCl, mercury, or TSM through fuel analysis, your initial compliance requirement is to conduct a fuel analysis for each type of fuel burned in your boiler or process heater according to §63.7521 and Table 6 to this subpart and establish operating limits according to §63.7530 and Table 8 to this subpart.

(c) For affected sources that have an applicable work practice standard, your initial compliance requirements depend on the

subcategory and rated capacity of your boiler or process heater. If your boiler or process heater is in any of the limited use subcategories or has a heat input capacity less than 100 MMBtu per hour, your initial compliance demonstration is conducting a performance test for carbon monoxide according to Table 5 to this subpart. If your boiler or process heater is in any of the large subcategories and has a heat input capacity of 100 MMBtu per hour or greater, your initial compliance demonstration is conducting a performance evaluation of your continuous emission monitoring system for carbon monoxide according to §63.7525(a).

(d) For existing affected sources, you must demonstrate initial compliance no later than 180 days after the compliance date that is specified for your source in §63.7495 and according to the applicable provisions in §63.7(a)(2) as cited in Table 10 to this subpart.

(e) If your new or reconstructed affected source commenced construction or reconstruction between January 13, 2003 and November 12, 2004, you must demonstrate initial compliance with either the proposed emission limits and work practice standards or the promulgated emission limits and work practice standards no later than 180 days after November 12, 2004 or within 180 days after startup of the source, whichever is later, according to §63.7(a)(2)(ix).

(f) If your new or reconstructed affected source commenced construction or reconstruction between January 13, 2003, and November 12, 2004, and you chose to comply with the proposed emission limits and work practice standards when demonstrating initial compliance, you must conduct a second compliance demonstration for the promulgated emission limits and work practice standards within 3 years after November 12, 2004 or within 3 years after startup of the affected source, whichever is later.

(g) If your new or reconstructed affected source commences construction or reconstruction after November 12, 2004, you must demonstrate initial compliance with the promulgated emission limits and work practice standards no later than 180 days after startup of the source.

§63.7515 When must I conduct subsequent performance tests or fuel analyses?

(a) You must conduct all applicable performance tests according to §63.7520 on an annual basis, unless you follow the requirements listed in paragraphs (b) through (d) of this section. Annual performance tests must be completed between 10 and 12 months after the previous performance test, unless you follow the requirements listed in paragraphs (b) through (d) of this section.

(b) You can conduct performance tests less often for a given pollutant if your performance tests for the pollutant (particulate matter, HCl, mercury, or TSM) for at least 3 consecutive years show that you comply with the emission limit. In this case, you do not have to conduct a performance test for that pollutant for the next 2 years. You must conduct a performance test during the third year and no more than 36 months after the previous performance test.

(c) If your boiler or process heater continues to meet the emission limit for particulate matter, HCl, mercury, or TSM, you may choose to conduct performance tests for these pollutants every third year, but each such performance test must be conducted no more than 36 months after the previous performance test.

(d) If a performance test shows noncompliance with an emission limit for particulate matter, HCl, mercury, or TSM, you must conduct annual performance tests for that pollutant until all performance tests over a consecutive 3-year period show compliance.

(e) If you have an applicable work practice standard for carbon monoxide and your boiler or process heater is in any of the limited use subcategories or has a heat input capacity less than 100 MMBtu per hour, you must conduct annual performance tests for carbon monoxide according to §63.7520. Each annual performance test must be conducted between 10 and 12 months after the previous performance test.

(f) You must conduct a fuel analysis according to §63.7521 for each type of fuel burned no later than 5 years after the previous fuel analysis for each fuel type. If you burn a new type of fuel, you must conduct a fuel analysis before burning the new type of fuel in your boiler or process heater. You must still meet all applicable continuous compliance requirements in §63.7540.

(g) You must report the results of performance tests and fuel analyses within 60 days after the completion of the performance tests or fuel analyses. This report should also verify that the operating limits for your affected source have not changed or provide documentation of revised operating parameters established according to §63.7530 and Table 7 to this subpart, as applicable. The reports for all subsequent performance tests and fuel analyses should include all applicable information required in §63.7550.

§63.7520 What performance tests and procedures must I use?

(a) You must conduct all performance tests according to §63.7(c), (d), (f), and (h). You must also develop a site-specific test plan according to the requirements in §63.7(c) if you elect to demonstrate compliance through performance testing.

(b) You must conduct each performance test according to the requirements in Table 5 to this subpart.

(c) New or reconstructed boilers or process heaters in one of the liquid fuel subcategories that burn only fossil fuels and other gases and do not burn any residual oil must demonstrate compliance according to §63.7506(a).

(d) You must conduct each performance test under the specific conditions listed in Tables 5 and 7 to this subpart. You must conduct performance tests at the maximum normal operating load while burning the type of fuel or mixture of fuels that have the highest content of chlorine, mercury, and total selected metals, and you must demonstrate initial compliance and establish your operating limits based on these tests. These requirements could result in the need to conduct more than one performance test.

(e) You may not conduct performance tests during periods of startup, shutdown, or malfunction.

(f) You must conduct three separate test runs for each performance test required in this section, as specified in §63.7(e)(3). Each test run must last at least 1 hour.

(g) To determine compliance with the emission limits, you must use the F-Factor methodology and equations in sections 12.2 and 12.3 of EPA Method 19 of appendix A to part 60 of this chapter to convert the measured particulate matter concentrations, the measured HCl concentrations, the measured TSM concentrations, and the measured mercury concentrations that result from the initial performance test to pounds per million Btu heat input emission rates using F-factors.

§63.7521 What fuel analyses and procedures must I use?

(a) You must conduct fuel analyses according to the procedures in paragraphs (b) through (e) of this section and Table 6 to this subpart, as applicable.

(b) You must develop and submit a site-specific fuel analysis plan to the EPA Administrator for review and approval according to the following procedures and requirements in paragraphs (b)(1) and (2) of this section.

(1) You must submit the fuel analysis plan no later than 60 days before the date that you intend to demonstrate compliance.

(2) You must include the information contained in paragraphs (b)(2)(i) through (vi) of this section in your fuel analysis plan.

(i) The identification of all fuel types anticipated to be burned in each boiler or process heater.

(ii) For each fuel type, the notification of whether you or a fuel supplier will be conducting the fuel analysis.

(iii) For each fuel type, a detailed description of the sample location and specific procedures to be used for collecting and preparing the composite samples if your procedures are different from paragraph (c) or (d) of this section. Samples should be collected at a location that most accurately represents the fuel type, where possible, at a point prior to mixing with other dissimilar fuel types.

(iv) For each fuel type, the analytical

methods, with the expected minimum detection levels, to be used for the measurement of selected total metals, chlorine, or mercury.

(v) If you request to use an alternative analytical method other than those required by Table 6 to this subpart, you must also include a detailed description of the methods and procedures that will be used.

(vi) If you will be using fuel analysis from a fuel supplier in lieu of site-specific sampling and analysis, the fuel supplier must use the analytical methods required by Table 6 to this subpart.

(c) At a minimum, you must obtain three composite fuel samples for each fuel type according to the procedures in paragraph (c)(1) or (2) of this section.

(1) If sampling from a belt (or screw) feeder, collect fuel samples according to paragraphs (c)(1)(i) and (ii) of this section.

(i) Stop the belt and withdraw a 6-inch wide sample from the full cross-section of the stopped belt to obtain a minimum two pounds of sample. Collect all the material (fines and coarse) in the full cross-section. Transfer the sample to a clean plastic bag.

(ii) Each composite sample will consist of a minimum of three samples collected at approximately equal intervals during the testing period.

(2) If sampling from a fuel pile or truck, collect fuel samples according to paragraphs (c)(2)(i) through (iii) of this section.

(i) For each composite sample, select a minimum of five sampling locations uniformly spaced over the surface of the pile.

(ii) At each sampling site, dig into the pile to a depth of 18 inches. Insert a clean flat square shovel into the hole and withdraw a sample, making sure that large pieces do not fall off during sampling.

(iii) Transfer all samples to a clean plastic bag for further processing.

(d) Prepare each composite sample according to the procedures in paragraphs (d)(1) through (7) of this section.

(1) Thoroughly mix and pour the entire composite sample over a clean plastic sheet.

(2) Break sample pieces larger than 3 inches into smaller sizes.

(3) Make a pie shape with the entire composite sample and subdivide it into four equal parts.

(4) Separate one of the quarter samples as the first subset.

(5) If this subset is too large for grinding, repeat the procedure in paragraph (d)(3) of this section with the quarter sample and obtain a one-quarter subset from this sample.

(6) Grind the sample in a mill.

(7) Use the procedure in paragraph (d)(3) of this section to obtain a one-quarter subsample for analysis. If the quarter sample is too large, subdivide it further using the same procedure.

(e) Determine the concentration of pollutants in the fuel (mercury, chlorine, and/or total selected metals) in units of pounds per million Btu of each composite sample for each fuel type according to the procedures in Table 6 to this subpart.

§63.7522 Can I use emission averaging to comply with this subpart?

(a) As an alternative to meeting the requirements of §63.7500, if you have more than one existing large solid fuel boiler located at your facility, you may demonstrate compliance by emission averaging according to the procedures in this section in a State that does not choose to exclude emission averaging.

(b) For each existing large solid fuel boiler in the averaging group, the emission rate achieved during the initial compliance test for the HAP being averaged must not exceed the emission level that was being achieved on November 12, 2004 or the control technology employed during the initial compliance test must not be less effective for the HAP being averaged than the control technology employed on November 12, 2004.

(c) You may average particulate matter or TSM, HCl, and mercury emissions from existing large solid fuel boilers to demonstrate compliance with the limits in Table 1 to this subpart if you satisfy the requirements in paragraphs (d), (e), and (f) of this section.

(d) The weighted average emissions from the existing large solid fuel boilers participating in the emissions averaging option must be in compliance with the limits in Table 1 to this subpart at all times following the compliance date specified in §63.7495.

(e) You must demonstrate initial compliance according to paragraphs (e)(1) or (2) of this section.

(1) You must use Equation 1 of this section to demonstrate that the particulate matter or TSM, HCl, and mercury emissions from all existing large solid fuel boilers participating in the emissions averaging option do not exceed the emission limits in Table 1 to this subpart.

$$\text{AveWeighted Emissions} = \sum_{i=1}^{n} (Er \times Hm) \div \sum_{i=1}^{n} Hm \qquad \text{(Eq.1)}$$

Where:

AveWeighted = Average weighted emissions for particulate matter or TSM, HCl, or mercury, in units of pounds per million Btu of heat input.

Er = Emission rate (as calculated according to Table 5 to this subpart) or fuel analysis (as calculated by the applicable equation in §63.7530(d)) for boiler, i, for particulate matter of TSM, HCl, or mercury, in units of pounds per million Btu of heat input.

Hm = Maximum rated heat input capacity of boiler, i, in units of million Btu per hour.

n = Number of large solid fuel boilers participating in the emissions averaging option.

(2) If you are not capable of monitoring heat input, you can use Equation 2 of this section as an alternative to using Equation 1 of this section to demonstrate that the particulate matter or TSM, HCl, and mercury emissions from all existing large solid fuel boilers participating in the emissions averaging option do not exceed the emission limits in Table 1 to this subpart.

$$\text{AveWeighted Emissions} = \sum_{i=1}^{n} (Er \times Sm \times Cf) \div \sum_{i=1}^{n} Sm \times Cf \qquad \text{(Eq. 2)}$$

Where:

AveWeighted = Average weighted emission level for PM or TSM, HCl, or mercury, in units of pounds per million Btu of heat input.

Er = Emission rate (as calculated according to Table 5 to this subpart) or fuel analysis (as calculated by the applicable equation in §63.7530(d)) for boiler, i, for particulate matter of TSM, HCl, or mercury, in units of pounds per million Btu of heat input.

Sm = Maximum steam generation by boiler, i, in units of pounds.

Cf = Conversion factor, calculated from the most recent compliance test, in units of million Btu of heat input per pounds of stream generated.

(f) You must demonstrate continuous compliance on a 12-month rolling average basis determined at the end of every month (12 times per year) according to paragraphs (f)(1) and (2). The first 12-month rolling average period begins on the compliance date specified in §63.7495.

(1) For each calendar month, you must use Equation 3 of this section to calculate the 12-month rolling average weighted emission limit using the actual heat capacity for each existing large solid fuel boiler participating in the missions averaging option.

$$\text{AveWeighted Emissions} = \sum_{i=1}^{n} (Er \times Hb) \div \sum_{i=1}^{n} Hb \qquad \text{(Eq. 3)}$$

Where:

AveWeighted Emissions = 12-month rolling average weighted emission level for particulate matter or TSM, HCl, or mercury, in units of pounds per million Btu of heat input.

Er = Emission rate, calculated during the most recent compliance test, (as calculated according to Table 5 to this subpart) or fuel analysis (as calculated by the applicable equation in §63.7530(d)) for boiler, i, for particulate matter of TSM, HCl, or mercury, in units of pounds per million Btu of heat input.

Hb = The average heat input for each calendar month of boiler, i, in units of million Btu.

n = Number of large solid fuel boilers participating in the emissions averaging option.

(2) If you are not capable of monitoring the heat input, you can use Equation 4 of this section as an alternative to using Equation 3 of the section to calculate the 12-month rolling average weighted emission limit using the actual steam generation from the large solid fuel boilers participating in the emissions averaging option.

$$\text{AveWeighted Emissions} = \sum_{i=1}^{n} (Er \times Sa \times Cf) \div \sum_{i=1}^{n} Sa \times Cf \qquad \text{(Eq. 4)}$$

Where:

AveWeighted Emissions = 12-month rolling average weighted emission level for PM or TSM, HCl, or mercury, in units of pounds per million Btu of heat input.

Er = Emission rate, calculated during the most recent compliance test, (as calculated according to Table 5 to this subpart) or fuel analysis (as calculated by the applicable equation in §63.7530(d)) for boiler, i, for particulate matter or TSM, HCl, or mercury, in units of pounds per million Btu of heat input.

Sa = Actual steam generation for each calendar month by boiler, i, in units of pounds.

Cf = Conversion factor, as calculated during the most recent compliance test, in units of million Btu of heat input per pounds of stream generated.

(g) You must develop and submit an implementation plan for emission averaging to the applicable regulatory authority for review and approval according to the following procedures and requirements in paragraphs (g)(1) through (4).

(1) You must submit the implementation plan no later than 180 days before the date that the facility intends to demonstrate compliance using the emission averaging option.

(2) You must include the information contained in paragraphs (g)(2)(i) through (vii) of this section in your implementation plan for all emission sources included in an emissions average:

(i) The identification of all existing large solid fuel boilers in the averaging group, including for each either the applicable HAP emission level or the control technology installed on;

(ii) The process parameter (heat input or steam generated) that will be monitored for each averaging group of large solid fuel boilers;

(iii) The specific control technology or pollution prevention measure to be used for each emission source in the averaging group and the date of its installation or application. If the pollution prevention measure reduces or eliminates emissions from multiple sources, the owner or operator must identify each source;

(iv) The test plan for the measurement of particulate matter (or TSM), HCl, or mercury emissions in accordance with the requirements in §63.7520;

(v) The operating parameters to be monitored for each control system or device and a description of how the operating limits will be determined;

(vi) If you request to monitor an alternative operating parameter pursuant to §63.7525, you must also include:

(A) A description of the parameter(s) to be monitored and an explanation of the criteria used to select the parameter(s); and

(B) A description of the methods and procedures that will be used to demonstrate that the parameter indicates proper operation of the control device; the frequency and content of monitoring, reporting, and recordkeeping requirements; and a demonstration, to the satisfaction of the applicable regulatory authority, that the proposed monitoring frequency is sufficient to represent control device operating conditions; and

(vii) A demonstration that compliance with each of the applicable emission limit(s) will be achieved under representative operating conditions.

(3) Upon receipt, the regulatory authority shall review and approve or disapprove the plan according to the following criteria:

(i) Whether the content of the plan includes all of the information specified in paragraph (g)(2) of this section; and

(ii) Whether the plan presents sufficient information to determine that compliance will be achieved and maintained.

(4) The applicable regulatory authority shall not approve an emission averaging implementation plan containing any of the following provisions:

(i) Any averaging between emissions of differing pollutants or between differing sources; or

(ii) The inclusion of any emission source other than an existing large solid fuel boiler.

§63.7525 What are my monitoring, installation, operation, and maintenance requirements?

(a) If you have an applicable work practice standard for carbon monoxide, and your boiler or process heater is in any of the large subcategories and has a heat input capacity of 100 MMBtu per hour or greater, you must install, operate, and maintain a continuous emission monitoring system (CEMS) for carbon monoxide according to the procedures in paragraphs (a)(1) through (6) of this section by the compliance date specified in §63.7495.

(1) Each CEMS must be installed, operated, and maintained according to Performance Specification (PS) 4A of 40 CFR part 60, appendix B, and according to the site-specific monitoring plan developed according to §63.7505(d).

(2) You must conduct a performance evaluation of each CEMS according to the requirements in §63.8 and according to PS 4A of 40 CFR part 60, appendix B.

(3) Each CEMS must complete a minimum of one cycle of operation (sampling, analyzing, and data recording) for each successive 15-minute period.

(4) The CEMS data must be reduced as specified in §63.8(g)(2).

(5) You must calculate and record a 30-day rolling average emission rate on a daily basis. A new 30-day rolling average emission rate is calculated as the average of all of the hourly CO emission data for the preceding 30 operating days.

(6) For purposes of calculating data averages, you must not use data recorded during periods of monitoring malfunctions, associated repairs, out-of-control periods, required quality assurance or control activities, or when your boiler or process heater is operating at less than 50 percent of its rated capacity. You must use all the data collected during all other periods in assessing compliance. Any period for which the monitoring system is out of control and data are not available for required calculations constitutes a deviation from the monitoring requirements.

(b) If you have an applicable opacity

operating limit, you must install, operate, certify and maintain each continuous opacity monitoring system (COMS) according to the procedures in paragraphs (b)(1) through (7) of this section by the compliance date specified in §63.7495.

(1) Each COMS must be installed, operated, and maintained according to PS 1 of 40 CFR part 60, appendix B.

(2) You must conduct a performance evaluation of each COMS according to the requirements in §63.8 and according to PS 1 of 40 CFR part 60, appendix B.

(3) As specified in §63.8(c)(4)(i), each COMS must complete a minimum of one cycle of sampling and analyzing for each successive 10-second period and one cycle of data recording for each successive 6-minute period.

(4) The COMS data must be reduced as specified in §63.8(g)(2).

(5) You must include in your site-specific monitoring plan procedures and acceptance criteria for operating and maintaining each COMS according to the requirements in §63.8(d). At a minimum, the monitoring plan must include a daily calibration drift assessment, a quarterly performance audit, and an annual zero alignment audit of each COMS.

(6) You must operate and maintain each COMS according to the requirements in the monitoring plan and the requirements of §63.8(e). Identify periods the COMS is out of control including any periods that the COMS fails to pass a daily calibration drift assessment, a quarterly performance audit, or an annual zero alignment audit.

(7) You must determine and record all the 6-minute averages (and 1-hour block averages as applicable) collected for periods during which the COMS is not out of control.

(c) If you have an operating limit that requires the use of a CMS, you must install, operate, and maintain each continuous parameter monitoring system (CPMS) according to the procedures in paragraphs (c)(1) through (5) of this section by the compliance date specified in §63.7495.

(1) The CPMS must complete a minimum of one cycle of operation for each successive 15-minute period. You must have a minimum of four successive cycles of operation to have a valid hour of data.

(2) Except for monitoring malfunctions, associated repairs, and required quality assurance or control activities (including, as applicable, calibration checks and required zero and span adjustments), you must conduct all monitoring in continuous operation at all times that the unit is operating. A monitoring malfunction is any sudden, infrequent, not reasonably preventable failure of the monitoring to provide valid data. Monitoring failures that are caused in part by poor maintenance or careless operation are not malfunctions.

(3) For purposes of calculating data averages, you must not use data recorded during monitoring malfunctions, associated repairs, out of control periods, or required quality assurance or control activities. You must use all the data collected during all other periods in assessing compliance. Any period for which the monitoring system is out-of-control and data are not available for required calculations constitutes a deviation from the monitoring requirements.

(4) Determine the 3-hour block average of all recorded readings, except as provided in paragraph (c)(3) of this section.

(5) Record the results of each inspection, calibration, and validation check.

(d) If you have an operating limit that requires the use of a flow measurement device, you must meet the requirements in paragraphs (c) and (d)(1) through (4) of this section.

(1) Locate the flow sensor and other necessary equipment in a position that provides a representative flow.

(2) Use a flow sensor with a measurement sensitivity of 2 percent of the flow rate.

(3) Reduce swirling flow or abnormal velocity distributions due to upstream and downstream disturbances.

(4) Conduct a flow sensor calibration check at least semiannually.

(e) If you have an operating limit that requires the use of a pressure measurement device, you must meet the requirements in paragraphs (c) and (e)(1) through (6) of this section.

(1) Locate the pressure sensor(s) in a position that provides a representative measurement of the pressure.

(2) Minimize or eliminate pulsating pressure, vibration, and internal and external corrosion.

(3) Use a gauge with a minimum tolerance of 1.27 centimeters of water or a transducer with a minimum tolerance of 1 percent of the pressure range.

(4) Check pressure tap pluggage daily.

(5) Using a manometer, check gauge calibration quarterly and transducer calibration monthly.

(6) Conduct calibration checks any time the sensor exceeds the manufacturer's specified maximum operating pressure range or install a new pressure sensor.

(f) If you have an operating limit that requires the use of a pH measurement device, you must meet the requirements in paragraphs (c) and (f)(1) through (3) of this section.

(1) Locate the pH sensor in a position that provides a representative measurement of scrubber effluent pH.

(2) Ensure the sample is properly mixed and representative of the fluid to be measured.

(3) Check the pH meter's calibration on at least two points every 8 hours of process operation.

(g) If you have an operating limit that requires the use of equipment to monitor voltage and secondary current (or total power input) of an electrostatic precipitator (ESP), you must use voltage and secondary current monitoring equipment to measure voltage and secondary current to the ESP.

(h) If you have an operating limit that requires the use of equipment to monitor sorbent injection rate (*e.g.*, weigh belt, weigh hopper, or hopper flow measurement device), you must meet the requirements in paragraphs (c) and (h)(1) through (3) of this section.

(1) Locate the device in a position(s) that provides a representative measurement of the total sorbent injection rate.

(2) Install and calibrate the device in accordance with manufacturer's procedures and specifications.

(3) At least annually, calibrate the device in accordance with the manufacturer's procedures and specifications.

(i) If you elect to use a fabric filter bag leak detection system to comply with the requirements of this subpart, you must install, calibrate, maintain, and continuously operate a bag leak detection system as specified in paragraphs (i)(1) through (8) of this section.

(1) You must install and operate a bag leak detection system for each exhaust stack of the fabric filter.

(2) Each bag leak detection system must be installed, operated, calibrated, and maintained in a manner consistent with the manufacturer's written specifications and recommendations and in accordance with the guidance provided in EPA–454/R–98–015, September 1997.

(3) The bag leak detection system must be certified by the manufacturer to be capable of detecting particulate matter emissions at concentrations of 10 milligrams per actual cubic meter or less.

(4) The bag leak detection system sensor must provide output of relative or absolute particulate matter loadings.

(5) The bag leak detection system must be equipped with a device to continuously record the output signal from the sensor.

(6) The bag leak detection system must be equipped with an alarm system that will sound automatically when an increase in relative particulate matter emissions over a preset level is detected. The alarm must be located where it is easily heard by plant operating personnel.

(7) For positive pressure fabric filter systems that do not duct all compartments of cells to a common stack, a bag leak detection system must be installed in each baghouse compartment or cell.

(8) Where multiple bag leak detectors are required, the system's instrumentation and alarm may be shared among detectors

§63.7530 How do I demonstrate initial compliance with the emission limits and work practice standards?

(a) You must demonstrate initial compliance with each emission limit and work practice standard that applies to you by either conducting initial performance tests and establishing operating limits, as applicable, according to §63.7520, paragraph (c) of this section, and Tables 5 and 7 to this subpart OR conducting initial fuel analyses to determine emission rates and establishing operating limits, as applicable, according to §63.7521, paragraph (d) of this section, and Tables 6 and 8 to this subpart.

(b) New or reconstructed boilers or process heaters in one of the liquid fuel subcategories that burn only fossil fuels and other gases and do not burn any residual oil must demonstrate compliance according to §63.7506(a).

(c) If you demonstrate compliance through performance testing, you must establish each site-specific operating limit in Tables 2 through 4 to this subpart that applies to you according to the requirements in §63.7520, Table 7 to this subpart, and paragraph (c)(4) of this section, as applicable. You must also conduct fuel analyses according to §63.7521 and establish maximum fuel pollutant input levels according to paragraphs (c)(1) through (3) of this section, as applicable.

(1) You must establish the maximum chlorine fuel input (Cinput) during the initial performance testing according to the procedures in paragraphs (c)(1)(i) through (iii) of this section.

(i) You must determine the fuel type or fuel mixture that you could burn in your boiler or process heater that has the highest content of chlorine.

(ii) During the performance testing for HCl, you must determine the fraction of the total heat input for each fuel type burned (Qi) based on the fuel mixture that has the highest content of chlorine, and the average chlorine concentration of each fuel type burned (Ci).

(iii) You must establish a maximum chlorine input level using Equation 5 of this section.

$$Cl_{input} = \sum_{i=1}^{n} [(C_i)(Q_i)] \quad \text{(Eq. 5)}$$

Where:

Cl_{input} = Maximum amount of chlorine entering the boiler or process heater through fuels burned in units of pounds per million Btu.

C_i = Arithmetic average concentration of chlorine in fuel type, i, analyzed according to §63.7521, in units of pounds per million Btu.

Q_i = Fraction of total heat input from fuel type, i, based on the fuel mixture that has the highest content of chlorine. If you do not burn multiple fuel types during the performance testing, it is not necessary to determine the value of this term. Insert a value of "1" for Q_i.

n = Number of different fuel types burned in your boiler or process heater for the mixture that has the highest content of chlorine.

(2) If you choose to comply with the alternative TSM emission limit instead of the particulate matter emission limit, you must establish the maximum TSM fuel input level (TSM_{input}) during the initial performance testing according to the procedures in paragraphs (c)(2)(i) through (iii) of this section.

(i) You must determine the fuel type or fuel mixture that you could burn in your boiler or process heater that has the highest content of TSM.

(ii) During the performance testing for TSM, you must determine the fraction of total heat input from each fuel burned (Q_i) based on the fuel mixture that has the highest content of total selected metals, and the average TSM concentration of each fuel type burned (M_i).

(iii) You must establish a baseline TSM input level using Equation 6 of this section.

$$TSM_{input} = \sum_{i=1}^{n} [(M_i)(Q_i)] \quad \text{(Eq. 6)}$$

Where:

TSM_{input} = Maximum amount of TSM entering the boiler or process heater through fuels burned in units of pounds per million Btu.

M_i = Arithmetic average concentration of TSM in fuel type, i, analyzed according to §63.7521, in units of pounds per million Btu.

Q_i = Fraction of total heat input from based fuel type, i, based on the fuel mixture that has the highest content of TSM. If you do not burn multiple fuel types during the performance test, it is not necessary to determine the value of this term. Insert a value of "1" for Q_i.

n = Number of different fuel types burned in your boiler or process heater for the mixture that has the highest content of TSM.

(3) You must establish the maximum mercury fuel input level (Mercuryinput) during the initial performance testing using the procedures in paragraphs (c)(3)(i) through (iii) of this section.

(i) You must determine the fuel type or fuel mixture that you could burn in your boiler or process heater that has the highest content of mercury.

(ii) During the compliance demonstration for mercury, you must determine the fraction of total heat input for each fuel burned (Qi) based on the fuel mixture that has the highest content of mercury, and the average mercury concentration of each fuel type burned (HGi).

(iii) You must establish a maximum mercury input level using Equation 7 of this section.

$$Mercury_{input} = \sum_{i=1}^{n} [(HG_i)(Q_i)] \quad \text{(Eq. 7)}$$

Where:

$Mercury_{input}$ = Maximum amount of mercury entering the boiler or process heater through fuels burned in units of pounds per million Btu.

HG_i = Arithmetic average concentration of mercury in fuel type, i, analyzed according to §63.7521, in units of pounds per million Btu.

Q_i = Fraction of total heat input from fuel type, i, based on the fuel mixture that has the highest mercury content. If you do not burn multiple fuel types during the performance test, it is not necessary to determine the value of this term. Insert a value of "1" for Q_i.

n = Number of different fuel types burned in your boiler or process heater for the mixture that has the highest content of mercury.

(4) You must establish parameter operating limits according to paragraphs (c)(4)(i) through (iv) of this section.

(i) For a wet scrubber, you must establish the minimum scrubber effluent pH, liquid flowrate, and pressure drop as defined in §63.7575, as your operating limits during the three-run performance test. If you use a wet scrubber and you conduct separate performance tests for particulate matter, HCl, and mercury emissions, you must establish one set of minimum scrubber effluent pH, liquid flowrate, and pressure drop operating

limits. The minimum scrubber effluent pH operating limit must be established during the HCl performance test. If you conduct multiple performance tests, you must set the minimum liquid flowrate and pressure drop operating limits at the highest minimum values established during the performance tests.

(ii) For an electrostatic precipitator, you must establish the minimum voltage and secondary current (or total power input), as defined in §63.7575, as your operating limits during the three-run performance test.

(iii) For a dry scrubber, you must establish the minimum sorbent injection rate, as defined in §63.7575, as your operating limit during the three-run performance test.

(iv) The operating limit for boilers or process heaters with fabric filters that choose to demonstrate continuous compliance through bag leak detection systems is that a bag leak detection system be installed according to the requirements in §63.7525, and that each fabric filter must be operated such that the bag leak detection system alarm does not sound more than 5 percent of the operating time during a 6-month period.

(d) If you elect to demonstrate compliance with an applicable emission limit through fuel analysis, you must conduct fuel analyses according to §63.7521 and follow the procedures in paragraphs (d)(1) through (5) of this section.

(1) If you burn more than one fuel type, you must determine the fuel mixture you could burn in your boiler or process heater that would result in the maximum emission rates of the pollutants that you elect to demonstrate compliance through fuel analysis.

(2) You must determine the 90th percentile confidence level fuel pollutant concentration of the composite samples analyzed for each fuel type using the one-sided z-statistic test described in Equation 8 of this section.

$$P_{90} = \text{mean} + (SD \times t) \quad \text{(Eq. 8)}$$

Where:

P_{90} = 90th percentile confidence level pollutant concentration, in pounds per million Btu.

mean = Arithmetic average of the fuel pollutant concentration in the fuel samples analyzed according to §63.7521, in units of pounds per million Btu.

SD = Standard deviation of the pollutant concentration in the fuel samples analyzed according to §63.7521, in units of pounds per million Btu.

t = t distribution critical value for 90th percentile (0.1) probability for the appropriate degrees of freedom (number of samples minus one) as obtained from a Distribution Critical Value Table.

(3) To demonstrate compliance with the applicable emission limit for HCl, the HCl emission rate that you calculate for your boiler or process heater using Equation 9 of this section must be less than the applicable emission limit for HCl.

$$HCl = \sum_{i=1}^{n} \left[(C_{i90})(Q_i)(1.028)\right] \quad \text{(Eq. 9)}$$

Where:

HCl = HCl emission rate from the boiler or process heater in units of pounds per million Btu.

C_{i90} = 90th percentile confidence level concentration of chlorine in fuel type, i, in units of pounds per million Btu as calculated according to Equation 8 of this section

Q_i = Fraction of total heat input from fuel type, i, based on the fuel mixture that has the highest content of chlorine. If you do not burn multiple fuel types, it is not necessary to determine the value of this term. Insert a value of "1" for Q_i.

n = Number of different fuel types burned in your boiler or process heater for the mixture that has the highest content of chlorine.

1.028 = Molecular weight ratio of HCl to chlorine.

(4) To demonstrate compliance with the applicable emission limit for TSM, the TSM emission rate that you calculate for your boiler or process heater using Equation 10 of this section must be less than the applicable emission limit for TSM.

$$TSM = \sum_{i=1}^{n} \left[(M_{i90})(Q_i)\right] \quad \text{(Eq. 10)}$$

Where:

TSM = TSM emission rate from the boiler or process heater in units of pounds per million Btu.

M_{i90} = 90th percentile confidence level concentration of TSM in fuel, i, in units of pounds per million Btu as calculated according to Equation 8 of this section.

Q_i = Fraction of total heat input from fuel type, i, based on the fuel mixture that has the highest content of total selected metals. If you do not burn multiple fuel types, it is not necessary to determine the value of this term. Insert a value of "1" for Q_i.

n = Number of different fuel types burned in your boiler or process heater for the mixture that has the highest content of TSM.

(5) To demonstrate compliance with the applicable emission limit for mercury, the mercury emission rate that you calculate for your boiler or process heater using Equation 11 of this section must be less than the applicable emission limit for mercury.

$$\text{Mercury} = \sum_{i=1}^{n} \left[(HG_{i90})(Q_i)\right] \quad \text{(Eq. 11)}$$

Where:

Mercury = Mercury emission rate from the boiler or process heater in units of pounds per million Btu.

HG_{i90} = 90th percentile confidence level concentration of mercury in fuel, i, in units of pounds per million Btu as calculated according to Equation 8 of this section.

Q_i = Fraction of total heat input from fuel type, i, based on the fuel mixture that has the highest mercury content. If you do not burn multiple fuel types, it is not necessary to determine the value of this term. Insert a value of "1" for Q_i.

n = Number of different fuel types burned in your boiler or process heater for the mixture that has the highest mercury content.

(e) You must submit the Notification of Compliance Status containing the results of the initial compliance demonstration according to the requirements in §63.7545(e).

Continuous Compliance Requirements

§63.7535 How do I monitor and collect data to demonstrate continuous compliance?

(a) You must monitor and collect data according to this section and the site-specific monitoring plan required by §63.7505(d).

(b) Except for monitor malfunctions, associated repairs, and required quality assurance or control activities (including, as applicable, calibration checks and required zero and span adjustments), you must monitor continuously (or collect data at all required intervals) at all times that the affected source is operating.

(c) You may not use data recorded during monitoring malfunctions, associated repairs, or required quality assurance or control activities in data averages and calculations used to report emission or operating levels. You must use all the data collected during all other periods in assessing the operation of the control device and associated control system. Boilers and process heaters that have an applicable carbon monoxide work practice standard and are required to install and operate a CEMS, may not use data recorded during periods when the boiler or process heater is operating at less than 50 percent of its rated capacity.

§63.7540 How do I demonstrate continuous compliance with the emission limits and work practice standards?

(a) You must demonstrate continuous compliance with each emission limit, operating limit, and work practice standard in Tables 1 through 4 to this subpart that applies to you according to the methods specified in Table 8 to this subpart and paragraphs (a)(1) through (10) of this section.

(1) Following the date on which the initial performance test is completed or is required to be completed under §§63.7 and 63.7510, whichever date comes first, you must not operate above any of the applicable maximum operating limits or below any of the applicable minimum operating limits listed in Tables 2 through 4 to this subpart at all times except during periods of startup, shutdown and malfunction. Operating limits do not apply during performance tests. Operation above the established maximum or below the established minimum operating limits shall constitute a deviation of established operating limits.

(2) You must keep records of the type and amount of all fuels burned in each boiler or process heater during the reporting period to demonstrate that all fuel types and mixtures of fuels burned would either result in lower emissions of TSM, HCl, and mercury, than the applicable emission limit for each pollutant (if you demonstrate compliance through fuel analysis), or result in lower fuel input of TSM, chlorine, and mercury than the maximum values calculated during the last performance tests (if you demonstrate compliance through performance testing).

(3) If you demonstrate compliance with an applicable HCl emission limit through fuel analysis and you plan to burn a new type of fuel, you must recalculate the HCl emission rate using Equation 9 of §63.7530 according to paragraphs (a)(3)(i) through (iii) of this section.

(i) You must determine the chlorine concentration for any new fuel type in units of pounds per million Btu, based on supplier data or your own fuel analysis, according to the provisions in your site-specific fuel analysis plan developed according to §63.7521(b).

(ii) You must determine the new mixture of fuels that will have the highest content of chlorine.

(iii) Recalculate the HCl emission rate from your boiler or process heater under these new conditions using Equation 9 of §63.7530. The recalculated HCl emission rate must be less than the applicable emission limit.

(4) If you demonstrate compliance with an applicable HCl emission limit through performance testing and you plan to burn a new type of fuel type or a new mixture of fuels, you must recalculate the maximum chlorine input using Equation 5 of §63.7530. If the results of recalculating the maximum chlorine input using Equation 5 of §63.7530 are higher than the maximum chlorine input level established during the previous performance test, then you must conduct a new performance test within 60 days of burning the new fuel type or fuel mixture according to the procedures in §63.7520 to demonstrate that the HCl emissions do not exceed the emission limit. You must also establish new operating limits based on this performance test according to the procedures in §63.7530(c).

(5) If you demonstrate compliance with an applicable TSM emission limit through fuel analysis, and you plan to burn a new type of fuel, you must recalculate the TSM emission rate using Equation 10 of §63.7530 according to the procedures specified in paragraphs (a)(5)(i) through (iii) of this section.

(i) You must determine the TSM concentration for any new fuel type in units of pounds per million Btu, based on supplier data or your own fuel analysis, according to the provisions in your site-specific fuel analysis plan developed according to §63.7521(b).

(ii) You must determine the new mixture of fuels that will have the highest content of TSM.

(iii) Recalculate the TSM emission rate from your boiler or process heater under these new conditions using Equation 10 of §63.7530. The recalculated TSM emission rate must be less than the applicable emission limit.

(6) If you demonstrate compliance with an applicable TSM emission limit through performance testing, and you plan to burn a new type of fuel or a new mixture of fuels, you must recalculate the maximum TSM input using Equation 6 of §63.7530. If the results of recalculating the maximum total selected metals input using Equation 6 of §63.7530 are higher than the maximum TSM input level established during the previous performance test, then you must conduct a new performance test within 60 days of burning the new fuel type or fuel mixture according to the procedures in §63.7520 to demonstrate that the TSM emissions do not exceed the emission limit. You must also establish new operating limits based on this performance test according to the procedures in §63.7530(c).

(7) If you demonstrate compliance with an applicable mercury emission limit through fuel analysis, and you plan to burn a new type of fuel, you must recalculate the mercury emission rate using Equation 11 of §63.7530 according to the procedures specified in paragraphs (a)(7)(i) through (iii) of this section.

(i) You must determine the mercury concentration for any new fuel type in units of pounds per million Btu, based on supplier data or your own fuel analysis, according to the provisions in your site-specific fuel analysis plan developed according to §63.7521(b).

(ii) You must determine the new mixture of fuels that will have the highest content of mercury.

(iii) Recalculate the mercury emission rate from your boiler or process heater under these new conditions using Equation 11 of §63.7530. The recalculated mercury emission rate must be less than the applicable emission limit.

(8) If you demonstrate compliance with an applicable mercury emission limit through performance testing, and you plan to burn a new type of fuel or a new mixture of fuels, you must recalculate the maximum mercury input using Equation 7 of §63.7530. If the results of recalculating the maximum mercury input using Equation 7 of §63.7530 are higher than the maximum mercury input level established during the previous performance test, then you must conduct a new performance test within 60 days of burning the new fuel type or fuel mixture according to the procedures in §63.7520 to demonstrate that the mercury emissions do not exceed the emission limit. You must also establish new operating limits based on this performance test according to the procedures in §63.7530(c).

(9) If your unit is controlled with a fabric filter, and you demonstrate continuous compliance using a bag leak detection system, you must initiate corrective action within 1 hour of a bag leak detection system alarm and complete corrective actions according to your SSMP, and operate and maintain the fabric filter system such that the alarm does not sound more than 5 percent of the operating time during a 6-month period. You must also keep records of the date, time, and duration of each alarm, the time corrective action was

initiated and completed, and a brief description of the cause of the alarm and the corrective action taken. You must also record the percent of the operating time during each 6-month period that the alarm sounds. In calculating this operating time percentage, if inspection of the fabric filter demonstrates that no corrective action is required, no alarm time is counted. If corrective action is required, each alarm shall be counted as a minimum of 1 hour. If you take longer than 1 hour to initiate corrective action, the alarm time shall be counted as the actual amount of time taken to initiate corrective action.

(10) If you have an applicable work practice standard for carbon monoxide, and you are required to install a CEMS according to §63.7525(a), then you must meet the requirements in paragraphs (a)(10)(i) through (iii) of this section.

(i) You must continuously monitor carbon monoxide according to §§63.7525(a) and 63.7535.

(ii) Maintain a carbon monoxide emission level below your applicable carbon monoxide work practice standard in Table 1 to this subpart at all times except during periods of startup, shutdown, malfunction, and when your boiler or process heater is operating at less than 50 percent of rated capacity.

(iii) Keep records of carbon monoxide levels according to §63.7555(b).

(b) You must report each instance in which you did not meet each emission limit, operating limit, and work practice standard in Tables 1 through 4 to this subpart that apply to you. You must also report each instance during a startup, shutdown, or malfunction when you did not meet each applicable emission limit, operating limit, and work practice standard. These instances are deviations from the emission limits and work practice standards in this subpart. These deviations must be reported according to the requirements in §63.7550.

(c) During periods of startup, shutdown, and malfunction, you must operate in accordance with the SSMP as required in §63.7505(e).

(d) Consistent with §§63.6(e)and 63.7(e)(1), deviations that occur during a period of startup, shutdown, or malfunction are not violations if you demonstrate to the EPA Administrator's satisfaction that you were operating in accordance with your SSMP. The EPA Administrator will determine whether deviations that occur during a period of startup, shutdown, or malfunction are violations, according to the provisions in §63.6(e).

§63.7541 How do I demonstrate continuous compliance under the emission averaging provision?

(a) Following the compliance date, the owner or operator must demonstrate compliance with this subpart on a continuous basis by meeting the requirements of paragraphs (a)(1) through (4) of this section.

(1) For each calendar month, demonstrate compliance with the average weighted emissions limit for the existing large solid fuel boilers participating in the emissions averaging option as determined in §63.7522(f) and (g);

(2) For each existing solid fuel boiler participating in the emissions averaging option that is equipped with a dry control system, maintain opacity at or below the applicable limit;

(3) For each existing solid fuel boiler participating in the emissions averaging option that is equipped with a wet scrubber, maintain the 3-hour average parameter values at or below the operating limits established during the most recent performance test; and

(4) For each existing solid fuel boiler participating in the emissions averaging option that has an approved alternative operating plan, maintain the 3-hour average parameter values at or below the operating limits established in the most recent performance test.

(b) Any instance where the owner or operator fails to comply with the continuous monitoring requirements in paragraphs (a)(1) through (4) of this section, except during periods of startup, shutdown, and malfunction, is a deviation.

Notification, Reports, and Records

§63.7545 What notifications must I submit and when?

(a) You must submit all of the notifications in §§63.7(b) and (c), 63.8 (e), (f)(4) and (6), and 63.9 (b) through (h) that apply to you by the dates specified.

(b) As specified in §63.9(b)(2), if you startup your affected source before November 12, 2004, you must submit an Initial Notification not later than 120 days after November 12, 2004. The Initial Notification must include the information required in paragraphs (b)(1) and (2) of this section, as applicable.

(1) If your affected source has an annual capacity factor of greater than 10 percent, your Initial Notification must include the information required by §63.9(b)(2).

(2) If your affected source has a federally enforceable permit that limits the annual capacity factor to less than or equal to 10 percent such that the unit is in one of the limited use subcategories (the limited use solid fuel subcategory, the limited use liquid fuel subcategory, or the limited use gaseous fuel subcategory), your Initial Notification must include the information required by §63.9(b)(2) and also a signed statement indicating your affected source has a federally enforceable permit that limits the annual capacity factor to less than or equal to 10 percent.

(c) As specified in §63.9(b)(4) and (b)(5), if you startup your new or reconstructed affected source on or after November 12, 2004, you must submit an Initial Notification not later than 15 days after the actual date of startup of the affected source.

(d) If you are required to conduct a performance test you must submit a Notification of Intent to conduct a performance test at least 30 days before the performance test is scheduled to begin.

(e) If you are required to conduct an initial compliance demonstration as specified in §63.7530(a), you must submit a Notification of Compliance Status according to §63.9(h)(2)(ii). For each initial compliance demonstration, you must submit the Notification of Compliance Status, including all performance test results and fuel analyses, before the close of business on the 60th day following the completion of the performance test and/or other initial compliance demonstrations according to §63.10(d)(2). The Notification of Compliance Status report must contain all the information specified in paragraphs (e)(1) through (9), as applicable.

(1) A description of the affected source(s) including identification of which subcategory the source is in, the capacity of the source, a description of the add-on controls used on the source description of the fuel(s) burned, and justification for the fuel(s) burned during the performance test.

(2) Summary of the results of all performance tests, fuel analyses, and calculations conducted to demonstrate initial compliance including all established operating limits.

(3) Identification of whether you are complying with the particulate matter emission limit or the alternative total selected metals emission limit.

(4) Identification of whether you plan to demonstrate compliance with each applicable emission limit through performance testing or fuel analysis.

(5) Identification of whether you plan to demonstrate compliance by emissions averaging.

(6) A signed certification that you have met all applicable emission limits and work practice standards.

(7) A summary of the carbon monoxide emissions monitoring data and the maximum carbon monoxide emission levels recorded during the performance test to show that you have met any applicable work practice standard in Table 1 to this subpart.

(8) If your new or reconstructed boiler or process heater is in one of the liquid fuel subcategories and burns only liquid fossil fuels other than residual oil either alone or in combination with gaseous fuels, you must submit a signed statement certifying this in your Notification of Compliance Status report.

(9) If you had a deviation from any emission limit or work practice standard, you must also submit a description of the deviation, the duration of the deviation, and the corrective action taken in the Notification of Compliance Status report.

§63.7550 What reports must I submit and when?

(a) You must submit each report in Table 9 to this subpart that applies to you.

(b) Unless the EPA Administrator has approved a different schedule for submission of reports under §63.10(a), you must submit each report by the date in Table 9 to this subpart and according to the requirements in paragraphs (b)(1) through (5) of this section.

(1) The first compliance report must cover the period beginning on the compliance date that is specified for your affected source in §63.7495 and ending on June 30 or December 31, whichever date is the first date that occurs at least 180 days after the compliance date that is specified for your source in §63.7495.

(2) The first compliance report must be postmarked or delivered no later than July 31 or January 31, whichever date is the first date following the end of the first calendar half after the compliance date that is specified for your source in §63.7495.

(3) Each subsequent compliance report must cover the semiannual reporting period from January 1 through June 30 or the semiannual reporting period from July 1 through December 31.

(4) Each subsequent compliance report must be postmarked or delivered no later than July 31 or January 31, whichever date is the first date following the end of the semiannual reporting period.

(5) For each affected source that is subject to permitting regulations pursuant to 40 CFR part 70 or 40 CFR part 71, and if the permitting authority has established dates for submitting semiannual reports pursuant to 40 CFR 70.6(a)(3)(iii)(A) or 40 CFR 71.6(a)(3)(iii)(A), you may submit the first and subsequent compliance reports according to the dates the permitting authority has established instead of according to the dates in paragraphs (b)(1) through (4) of this section.

(c) The compliance report must contain the information required in paragraphs (c)(1) through (11) of this section.

(1) Company name and address.

(2) Statement by a responsible official with that official's name, title, and signature, certifying the truth, accuracy, and completeness of the content of the report.

(3) Date of report and beginning and ending dates of the reporting period.

(4) The total fuel use by each affected source subject to an emission limit, for each calendar month within the semiannual reporting period, including, but not limited to, a description of the fuel and the total fuel usage amount with units of measure.

(5) A summary of the results of the annual performance tests and documentation of any operating limits that were reestablished during this test, if applicable.

(6) A signed statement indicating that you burned no new types of fuel. Or, if you did burn a new type of fuel, you must submit the calculation of chlorine input, using Equation 5 of §63.7530, that demonstrates that your source is still within its maximum chlorine input level established during the previous performance testing (for sources that demonstrate compliance through performance testing) or you must submit the calculation of HCl emission rate using Equation 9 of §63.7530 that demonstrates that your source is still meeting the emission limit for HCl emissions (for boilers or process heaters that demonstrate compliance through fuel analysis). If you burned a new type of fuel, you must submit the calculation of TSM input, using Equation 6 of §63.7530, that demonstrates that your source is still within its maximum TSM input level established during the previous performance testing (for sources that demonstrate compliance through performance testing), or you must submit the calculation of TSM emission rate using Equation 10 of §63.7530 that demonstrates that your source is still meeting the emission limit for TSM emissions (for boilers or process heaters that demonstrate compliance through fuel analysis). If you burned a new type of fuel, you must submit the calculation of mercury input, using Equation 7 of §63.7530, that demonstrates that your source is still within its maximum mercury input level established during the previous performance testing (for sources that demonstrate compliance through performance testing), or you must submit the calculation of mercury emission rate using Equation 11 of §63.7530 that demonstrates that your source is still meeting the emission limit for mercury emissions (for boilers or process heaters that demonstrate compliance through fuel analysis).

(7) If you wish to burn a new type of fuel and you can not demonstrate compliance with the maximum chlorine input operating limit using Equation 5 of §63.7530, the maximum TSM input operating limit using Equation 6 of §63.7530, or the maximum mercury input operating limit using Equation 7 of §63.7530, you must include in the compliance report a statement indicating the intent to conduct a new performance test within 60 days of starting to burn the new fuel.

(8) The hours of operation for each boiler and process heater that is subject to an emission limit for each calendar month within the semiannual reporting period. This requirement applies only to limited use boilers and process heaters.

(9) If you had a startup, shutdown, or malfunction during the reporting period and you took actions consistent with your SSMP, the compliance report must include the information in §63.10(d)(5)(i).

(10) If there are no deviations from any emission limits or operating limits in this subpart that apply to you, and there are no deviations from the requirements for work practice standards in this subpart, a statement that there were no deviations from the emission limits, operating limits, or work practice standards during the reporting period.

(11) If there were no periods during which the CMSs, including CEMS, COMS, and CPMS, were out of control as specified in §63.8(c)(7), a statement that there were no periods during which the CMSs were out of control during the reporting period.

(d) For each deviation from an emission limit or operating limit in this subpart and for each deviation from the requirements for work practice standards in this subpart that occurs at an affected source where you are not using a CMSs to comply with that emission limit, operating limit, or work practice standard, the compliance report must contain the information in paragraphs (c)(1) through (10) of this section and the information required in paragraphs (d)(1) through (4) of this section. This includes periods of startup, shutdown, and malfunction.

(1) The total operating time of each affected source during the reporting period.

(2) A description of the deviation and which emission limit, operating limit, or work practice standard from which you deviated.

(3) Information on the number, duration, and cause of deviations (including unknown cause), as applicable, and the corrective action taken.

(4) A copy of the test report if the annual performance test showed a deviation from the emission limit for particulate matter or the alternative TSM limit, a deviation from the HCl emission limit, or a deviation from the mercury emission limit.

(e) For each deviation from an emission limitation and operating limit or work practice standard in this subpart occurring at an affected source where you are using a CMS to comply with that emission limit, operating limit, or work practice standard, you must include the information in paragraphs (c) (1) through (10) of this section and the information required in paragraphs (e) (1) through (12) of this section. This includes periods of startup, shutdown, and malfunction and any deviations from your site-specific monitoring plan as required in §63.7505(d).

(1) The date and time that each malfunction started and stopped and description of the nature of the deviation (*i.e.*, what you deviated from).

(2) The date and time that each CMS was inoperative, except for zero (low level) and high-level checks.

(3) The date, time, and duration that each CMS was out of control, including the information in §63.8(c)(8).

(4) The date and time that each deviation started and stopped, and whether each deviation occurred during a period of startup, shutdown, or malfunction or during another period.

(5) A summary of the total duration of the deviation during the reporting period and the

total duration as a percent of the total source operating time during that reporting period.

(6) A breakdown of the total duration of the deviations during the reporting period into those that are due to startup, shutdown, control equipment problems, process problems, other known causes, and other unknown causes.

(7) A summary of the total duration of CMSs downtime during the reporting period and the total duration of CMS downtime as a percent of the total source operating time during that reporting period.

(8) An identification of each parameter that was monitored at the affected source for which there was a deviation, including opacity, carbon monoxide, and operating parameters for wet scrubbers and other control devices.

(9) A brief description of the source for which there was a deviation.

(10) A brief description of each CMS for which there was a deviation.

(11) The date of the latest CMS certification or audit for the system for which there was a deviation.

(12) A description of any changes in CMSs, processes, or controls since the last reporting period for the source for which there was a deviation.

(f) Each affected source that has obtained a title V operating permit pursuant to 40 CFR part 70 or 40 CFR part 71 must report all deviations as defined in this subpart in the semiannual monitoring report required by 40 CFR 70.6(a)(3)(iii)(A) or 40 CFR 71.6(a)(3)(iii)(A). If an affected source submits a compliance report pursuant to Table 9 to this subpart along with, or as part of, the semiannual monitoring report required by 40 CFR 70.6(a)(3)(iii)(A) or 40 CFR 71.6(a)(3)(iii)(A), and the compliance report includes all required information concerning deviations from any emission limit, operating limit, or work practice requirement in this subpart, submission of the compliance report satisfies any obligation to report the same deviations in the semiannual monitoring report. However, submission of a compliance report does not otherwise affect any obligation the affected source may have to report deviations from permit requirements to the permit authority.

(g) If you operate a new gaseous fuel unit that is subject to the work practice standard specified in Table 1 to this subpart, and you intend to use a fuel other than natural gas or equivalent to fire the affected unit, you must submit a notification of alternative fuel use within 48 hours of the declaration of a period of natural gas curtailment or supply interruption, as defined in §63.7575. The notification must include the information specified in paragraphs (g)(1) through (5) of this section.

(1) Company name and address

(2) Identification of the affected unit.

(3) Reason you are unable to use natural gas or equivalent fuel, including the date when the natural gas curtailment was declared or the natural gas supply interruption began.

(4) Type of alternative fuel that you intend to use.

(5) Dates when the alternative fuel use is expected to begin and end.

§63.7555 What records must I keep?

(a) You must keep records according to paragraphs (a)(1) through (3) of this section.

(1) A copy of each notification and report that you submitted to comply with this subpart, including all documentation supporting any Initial Notification or Notification of Compliance Status or semiannual compliance report that you submitted, according to the requirements in §63.10(b)(2)(xiv).

(2) The records in §63.6(e)(3)(iii) through (v) related to startup, shutdown, and malfunction.

(3) Records of performance tests, fuel analyses, or other compliance demonstrations, performance evaluations, and opacity observations as required in §63.10(b)(2)(viii).

(b) For each CEMS, CPMS, and COMS, you must keep records according to paragraphs (b)(1) through (5) of this section.

(1) Records described in §63.10(b)(2)(vi) through (xi).

(2) Monitoring data for continuous opacity monitoring system during a performance evaluation as required in §63.6(h)(7)(i) and (ii).

(3) Previous (*i.e.*, superseded) versions of the performance evaluation plan as required in §63.8(d)(3).

(4) Request for alternatives to relative accuracy test for CEMS as required in §63.8(f)(6)(i).

(5) Records of the date and time that each deviation started and stopped, and whether the deviation occurred during a period of startup, shutdown, or malfunction or during another period.

(c) You must keep the records required in Table 8 to this subpart including records of all monitoring data and calculated averages for applicable operating limits such as opacity, pressure drop, carbon monoxide, and pH to show continuous compliance with each emission limit, operating limit, and work practice standard that applies to you.

(d) For each boiler or process heater subject to an emission limit, you must also keep the records in paragraphs (d)(1) through (5) of this section.

(1) You must keep records of monthly fuel use by each boiler or process heater, including the type(s) of fuel and amount(s) used.

(2) You must keep records of monthly hours of operation by each boiler or process heater This requirement applies only to limited-use boilers and process heaters

(3) A copy of all calculations and supporting documentation of maximum chlorine fuel input, using Equation 5 of §63.7530, that were done to demonstrate continuous compliance with the HCl emission limit, for sources that demonstrate compliance through performance testing. For sources that demonstrate compliance through fuel analysis, a copy of all calculations and supporting documentation of HCl emission rates, using Equation 9 of §63.7530, that were done to demonstrate compliance with the HCl emission limit. Supporting documentation should include results of any fuel analyses and basis for the estimates of maximum chlorine fuel input or HCl emission rates. You can use the results from one fuel analysis for multiple boilers and process heaters provided they are all burning the same fuel type. However, you must calculate chlorine fuel input, or HCl emission rate, for each boiler and process heater.

(4) A copy of all calculations and supporting documentation of maximum TSM fuel input, using Equation 6 of §63.7530, that were done to demonstrate continuous compliance with the TSM emission limit for sources that demonstrate compliance through performance testing. For sources that demonstrate compliance through fuel analysis, a copy of all calculations and supporting documentation of TSM emission rates, using Equation 10 of §63.7530, that were done to demonstrate compliance with the TSM emission limit. Supporting documentation should include results of any fuel analyses and basis for the estimates of maximum TSM fuel input or TSM emission rates. You can use the results from one fuel analysis for multiple boilers and process heaters provided they are all burning the same fuel type. However, you must calculate TSM fuel input, or TSM emission rates, for each boiler and process heater.

(5) A copy of all calculations and supporting documentation of maximum mercury fuel input, using Equation 7 of §63.7530, that were done to demonstrate continuous compliance with the mercury emission limit for sources that demonstrate compliance through performance testing. For sources that demonstrate compliance through fuel analysis, a copy of all calculations and supporting documentation of mercury emission rates, using Equation 11 of §63.7530, that were done to demonstrate compliance with the mercury emission limit. Supporting documentation should include results of any fuel analyses and basis for the estimates of maximum mercury fuel input or mercury emission rates. You can use the results from one fuel analysis for multiple boilers and process heaters provided they are all burning the same fuel type. However, you must calculate mercury fuel input, or mercury emission rates, for each boiler and process heater.

(e) If your boiler or process heater is subject to an emission limit or work practice standard in Table 1 to this subpart and has a federally enforceable permit that limits the annual capacity factor to less than or equal to 10 percent such that the unit is in one of the

limited use subcategories, you must keep the records in paragraphs (e)(1) and (2) of this section.

(1) A copy of the federally enforceable permit that limits the annual capacity factor of the source to less than or equal to 10 percent.

(2) Fuel use records for the days the boiler or process heater was operating.

§63.7560 In what form and how long must I keep my records?

(a) Your records must be in a form suitable and readily available for expeditious review, according to §63.10(b)(1).

(b) As specified in §63.10(b)(1), you must keep each record for 5 years following the date of each occurrence, measurement, maintenance, corrective action, report, or record.

(c) You must keep each record on site for at least 2 years after the date of each occurrence, measurement, maintenance, corrective action, report, or record, according to §63.10(b)(1). You can keep the records off site for the remaining 3 years.

Other Requirements and Information

§63.7565 What parts of the General Provisions apply to me?

Table 10 to this subpart shows which parts of the General Provisions in §§63.1 through 63.15 apply to you.

§63.7570 Who implements and enforces this subpart?

(a) This subpart can be implemented and enforced by U.S. EPA, or a delegated authority such as your State, local, or tribal agency. If the EPA Administrator has delegated authority to your State, local, or tribal agency, then that agency (as well as the U.S. EPA) has the authority to implement and enforce this subpart. You should contact your EPA Regional Office to find out if this subpart is delegated to your State, local, or tribal agency.

(b) In delegating implementation and enforcement authority of this subpart to a State, local, or tribal agency under 40 CFR part 63, subpart E, the authorities listed in paragraphs (b)(1) through (5) of this section are retained by the EPA Administrator and are not transferred to the State, local, or tribal agency, however, the U.S. EPA retains oversight of this subpart and can take enforcement actions, as appropriate.

(1) Approval of alternatives to the non-opacity emission limits and work practice standards in §63.7500(a) and (b) under §63.6(g).

(2) Approval of alternative opacity emission limits in §63.7500(a) under §63.6(h)(9).

(3) Approval of major change to test methods in Table 5 to this subpart under §63.7(e)(2)(ii) and (f) and as defined in §63.90.

(4) Approval of major change to monitoring under §63.8(f) and as defined in §63.90.

(5) Approval of major change to recordkeeping and reporting under §63.10(f) and as defined in §63.90.

§63.7575 What definitions apply to this subpart?

Terms used in this subpart are defined in the CAA, in §63.2 (the General Provisions), and in this section as follows:

Annual capacity factor means the ratio between the actual heat input to a boiler or process heater from the fuels burned during a calendar year, and the potential heat input to the boiler or process heater had it been operated for 8,760 hours during a year at the maximum steady state design heat input capacity.

Bag leak detection system means an instrument that is capable of monitoring particulate matter loadings in the exhaust of a fabric filter (*i.e.*, baghouse) in order to detect bag failures. A bag leak detection system includes, but is not limited to, an instrument that operates on electrodynamic, triboelectric, light scattering, light transmittance, or other principle to monitor relative particulate matter loadings.

Biomass fuel means unadulterated wood as defined in this subpart, wood residue, and wood products (*e.g.*, trees, tree stumps, tree limbs, bark, lumber, sawdust, sanderdust, chips, scraps, slabs, millings, and shavings); animal litter; vegetative agricultural and silvicultural materials, such as logging residues (slash), nut and grain hulls and chaff (*e.g.*, almond, walnut, peanut, rice, and wheat), bagasse, orchard prunings, corn stalks, coffee bean hulls and grounds.

Blast furnace gas fuel-fired boiler or process heater means an industrial/commercial/ institutional boiler or process heater that receives 90 percent or more of its total heat input (based on an annual average) from blast furnace gas.

Boiler means an enclosed device using controlled flame combustion and having the primary purpose of recovering thermal energy in the form of steam or hot water. Waste heat boilers are excluded from this definition.

Coal means all solid fuels classifiable as anthracite, bituminous, sub-bituminous, or lignite by the American Society for Testing and Materials in ASTM D388–991 [1], "Standard Specification for Classification of Coals by Rank [1]" (incorporated by reference, see §63.14(b)), coal refuse, and petroleum coke. Synthetic fuels derived from coal for the purpose of creating useful heat including but not limited to, solvent-refined coal, coal-oil mixtures, and coal-water mixtures, for the purposes of this subpart. Coal derived gases are excluded from this definition.

Coal refuse means any by-product of coal mining or coal cleaning operations with an ash content greater than 50 percent (by weight) and a heating value less than 13,900 kilojoules per kilogram (6,000 Btu per pound) on a dry basis.

Commercial/institutional boiler means a boiler used in commercial establishments or institutional establishments such as medical centers, research centers, institutions of higher education, hotels, and laundries to provide electricity, steam, and/or hot water.

Construction/demolition material means waste building material that result from the construction or demolition operations on houses and commercial and industrial buildings.

Deviation. (1) Deviation means any instance in which an affected source subject to this subpart, or an owner or operator of such a source:

(i) Fails to meet any requirement or obligation established by this subpart including, but not limited to, any emission limit, operating limit, or work practice standard;

(ii) Fails to meet any term or condition that is adopted to implement an applicable requirement in this subpart and that is included in the operating permit for any affected source required to obtain such a permit; or

(iii) Fails to meet any emission limit, operating limit, or work practice standard in this subpart during startup, shutdown, or malfunction, regardless or whether or not such failure is permitted by this subpart.

(2) A deviation is not always a violation. The determination of whether a deviation constitutes a violation of the standard is up to the discretion of the entity responsible for enforcement of the standards.

Distillate oil means fuel oils, including recycled oils, that comply with the specifications for fuel oil numbers 1 and 2, as defined by the American Society for Testing and Materials in ASTM D396–02a, "Standard Specifications for Fuel Oils [1]" (incorporated by reference, see §63.14(b)).

Dry scrubber means an add-on air pollution control system that injects dry alkaline sorbent (dry injection) or sprays an alkaline sorbent (spray dryer) to react with and neutralize acid gas in the exhaust stream forming a dry powder material. Sorbent injection systems in fluidized bed boilers and process heaters are included in this definition.

Electric utility steam generating unit means a fossil fuel-fired combustion unit of more than 25 megawatts that serves a generator that produces electricity for sale. A fossil fuel-fired unit that cogenerates steam and electricity and supplies more than one-third of its potential electric output capacity and more than 25 megawatts electrical output to any utility power distribution system for sale is considered an electric utility steam generating unit.

Electrostatic precipitator means an add-on air pollution control device used to capture particulate matter by charging the particles using an electrostatic field, collecting the particles using a grounded collecting surface, and transporting the particles into a hopper.

Fabric filter means an add-on air pollution control device used to capture particulate matter by filtering gas streams through filter media, also known as a baghouse.

Federally enforceable means all limitations and conditions that are enforceable by the EPA Administrator, including the requirements of 40 CFR parts 60 and 61, requirements within any applicable State implementation plan, and any permit requirements established under 40 CFR 52.21 or under 40 CFR 51.18 and 40 CFR 51.24.

Firetube boiler means a boiler in which hot gases of combustion pass through the tubes and water contacts the outside surfaces of the tubes.

Fossil fuel means natural gas, petroleum, coal, and any form of solid, liquid, or gaseous fuel derived from such materials.

Fuel type means each category of fuels that share a common name or classification. Examples include, but are not limited to, bituminous coal, sub-bituminous coal, lignite, anthracite, biomass, construction/demolition material, salt water laden wood, creosote treated wood, tires, residual oil. Individual fuel types received from different suppliers are not considered new fuel types except for construction/ demolition material.

Gaseous fuel includes, but is not limited to, natural gas, process gas, landfill gas, coal derived gas, refinery gas, and biogas. Blast furnace gas is exempted from this definition.

Heat input means heat derived from combustion of fuel in a boiler or process heater and does not include the heat input from preheated combustion air, recirculated flue gases, or exhaust gases from other sources such as gas turbines, internal combustion engines, kilns, etc.

Hot water heater means a closed vessel with a capacity of no more than 120 U.S. gallons in which water is heated by combustion of gaseous or liquid fuel and is withdrawn for use external to the vessel at pressures not exceeding 160 psig, including the apparatus by which the heat is generated and all controls and devices necessary to prevent water temperatures from exceeding 210°F (99°C).

Industrial boiler means a boiler used in manufacturing, processing, mining, and refining or any other industry to provide steam, hot water, and/or electricity.

Large gaseous fuel subcategory includes any watertube boiler or process heater that burns gaseous fuels not combined with any solid fuels, burns liquid fuel only during periods of gas curtailment or gas supply emergencies, has a rated capacity of greater than 10 MMBtu per hour heat input, and has an annual capacity factor of greater than 10 percent.

Large liquid fuel subcategory includes any watertube boiler or process heater that does not burn any solid fuel and burns any liquid fuel either alone or in combination with gaseous fuels, has a rated capacity of greater than 10 MMBtu per hour heat input, and has an annual capacity factor of greater than 10 percent. Large gaseous fuel boilers and process heaters that burn liquid fuel during periods of gas curtailment or gas supply emergencies are not included in this definition.

Large solid fuel subcategory includes any watertube boiler or process heater that burns any amount of solid fuel either alone or in combination with liquid or gaseous fuels, has a rated capacity of greater than 10 MMBtu per hour heat input, and has an annual capacity factor of greater than 10 percent.

Limited use gaseous fuel subcategory includes any watertube boiler or process heater that burns gaseous fuels not combined with any liquid or solid fuels, burns liquid fuel only during periods of gas curtailment or gas supply emergencies, has a rated capacity of greater than 10 MMBtu per hour heat input, and has a federally enforceable annual average capacity factor of equal to or less than 10 percent.

Limited use liquid fuel subcategory includes any watertube boiler or process heater that does not burn any solid fuel and burns any liquid fuel either alone or in combination with gaseous fuels, has a rated capacity of greater than 10 MMBtu per hour heat input, and has a federally enforceable annual average capacity factor of equal to or less than 10 percent. Limited use gaseous fuel boilers and process heaters that burn liquid fuel during periods of gas curtailment or gas supply emergencies are not included in this definition.

Limited use solid fuel subcategory includes any watertube boiler or process heater that burns any amount of solid fuel either alone or in combination with liquid or gaseous fuels, has a rated capacity of greater than 10 MMBtu per hour heat input, and has a federally enforceable annual average capacity factor of equal to or less than 10 percent.

Liquid fossil fuel means petroleum, distillate oil, residual oil and any form of liquid fuel derived from such material.

Liquid fuel includes, but is not limited to, distillate oil, residual oil, waste oil, and process liquids.

Minimum pressure drop means 90 percent of the lowest test-run average pressure drop measured according to Table 7 to this subpart during the most recent performance test demonstrating compliance with the applicable emission limit.

Minimum scrubber effluent pH means 90 percent of the lowest test-run average effluent pH measured at the outlet of the wet scrubber according to Table 7 to this subpart during the most recent performance test demonstrating compliance with the applicable hydrogen chloride emission limit.

Minimum scrubber flow rate means 90 percent of the lowest test-run average flow rate measured according to Table 7 to this subpart during the most recent performance test demonstrating compliance with the applicable emission limit.

Minimum sorbent flow rate means 90 percent of the lowest test-run average sorbent (or activated carbon) flow rate measured according to Table 7 to this subpart during the most recent performance test demonstrating compliance with the applicable emission limits.

Minimum voltage or amperage means 90 percent of the lowest test-run average voltage or amperage to the electrostatic precipitator measured according to Table 7 to this subpart during the most recent performance test demonstrating compliance with the applicable emission limits.

Natural gas means:

(1) A naturally occurring mixture of hydrocarbon and nonhydrocarbon gases found in geologic formations beneath the earth's surface, of which the principal constituent is methane; or

(2) Liquid petroleum gas, as defined by the American Society for Testing and Materials in ASTM D1835–03a, "Standard Specification for Liquid Petroleum Gases" (incorporated by reference, see §63.14(b)).

Opacity means the degree to which emissions reduce the transmission of light and obscure the view of an object in the background.

Particulate matter means any finely divided solid or liquid material, other than uncombined water, as measured by the test methods specified under this subpart, or an alternative method.

Period of natural gas curtailment or supply interruption means a period of time during which the supply of natural gas to an affected facility is halted for reasons beyond the control of the facility. An increase in the cost or unit price of natural gas does not constitute a period of natural gas curtailment or supply interruption.

Process heater means an enclosed device using controlled flame, that is not a boiler, and the unit's primary purpose is to transfer heat indirectly to a process material (liquid, gas, or solid) or to a heat transfer material for use in a process unit, instead of generating steam. Process heaters are devices in which the combustion gases do not directly come into contact with process materials. Process heaters do not include units used for comfort heat or space heat, food preparation for on-site consumption, or autoclaves.

Residual oil means crude oil, and all fuel oil numbers 4, 5 and 6, as defined by the American Society for Testing and Materials in ASTM D396–02a, "Standard Specifications for Fuel Oils [1]" (incorporated by reference, see §63.14(b)).

Responsible official means responsible official as defined in 40 CFR 70.2.

Small gaseous fuel subcategory includes any firetube boiler that burns gaseous fuels not combined with any solid fuels and burns liquid fuel only during periods of gas curtailment or gas supply emergencies, and any boiler or process heater that burns gaseous fuels not combined with any solid

fuels, burns liquid fuel only during periods of gas curtailment or gas supply emergencies, and has a rated capacity of less than or equal to 10 MMBtu per hour heat input.

Small liquid fuel subcategory includes any firetube boiler that does not burn any solid fuel and burns any liquid fuel either alone or in combination with gaseous fuels, and any boiler or process heater that does not burn any solid fuel and burns any liquid fuel either alone or in combination with gaseous fuels, and has a rated capacity of less than or equal to 10 MMBtu per hour heat input. Small gaseous fuel boilers and process heaters that burn liquid fuel during periods of gas curtailment or gas supply emergencies are not included in this definition.

Small solid fuel subcategory includes any firetube boiler that burns any amount of solid fuel either alone or in combination with liquid or gaseous fuels, and any other boiler or process heater that burns any amount of solid fuel either alone or in combination with liquid or gaseous fuels and has a rated capacity of less than or equal to 10 MMBtu per hour heat input.

Solid fuel includes, but is not limited to, coal, wood, biomass, tires, plastics, and other nonfossil solid materials.

Temporary boiler means any gaseous or liquid fuel boiler that is designed to, and is capable of, being carried or moved from one location to another. A temporary boiler that remains at a location for more than 180 consecutive days is no longer considered to be a temporary boiler. Any temporary boiler that replaces a temporary boiler at a location and is intended to perform the same or similar function will be included in calculating the consecutive time period.

Total selected metals means the combination of the following metallic HAP: arsenic, beryllium, cadmium, chromium, lead, manganese, nickel and selenium.

Unadulterated wood means wood or wood products that have not been painted, pigment-stained, or pressure treated with compounds such as chromate copper arsenate, pentachlorophenol, and creosote. Plywood, particle board, oriented strand board, and other types of wood products bound by glues and resins are included in this definition.

Waste heat boiler means a device that recovers normally unused energy and converts it to usable heat. Waste heat boilers incorporating duct or supplemental burners that are designed to supply 50 percent or more of the total rated heat input capacity of the waste heat boiler are not considered waste heat boilers, but are considered boilers. Waste heat boilers are also referred to as heat recovery steam generators.

Watertube boiler means a boiler in which water passes through the tubes and hot gases of combustion pass over the outside surfaces of the tubes.

Wet scrubber means any add-on air pollution control device that mixes an aqueous stream or slurry with the exhaust gases from a boiler or process heater to control emissions of particulate matter and/or to absorb and neutralize acid gases, such as hydrogen chloride.

Work practice standard means any design, equipment, work practice, or operational standard, or combination thereof, that is promulgated pursuant to section 112(h) of the CAA.

Tables to Subpart DDDDD of Part 63

TABLE 1 TO SUBPART DDDDD OF PART 63.—EMISSION LIMITS AND WORK PRACTICE STANDARDS

As stated in §63.7500, you must comply with the following applicable emission limits and work practice standards:

If your boiler or process heater is in this subcategory...	For the following pollutants...	You must meet the following emission limits and work practice standards...
1. New or reconstructed large solid fuel.	a. Particulate Matter (or Total Selected Metals)	0.025 lb per MMBtu of heat input; or (0.0003 lb per MMBtu of heat input).
	b. Hydrogen Chloride	0.02 lb per MMBtu of heat input.
	c. Mercury	0.000003 lb per MMBtu of heat input.
	d. Carbon Monoxide	400 ppm by volume on a dry basis corrected to 7 percent oxygen (30-day rolling average for units 100 MMBtu/hr or greater, 3-run average for units less than 100 MMBtu/hr).
2. New or reconstructed limited use solid fuel	a. Particulate Matter (or Total Selected Metals)	0.025 lb per MMBtu of heat input; or (0.0003 lb per MMBtu of heat input).
	b. Hydrogen Chloride	0.02 lb per MMBtu of heat input.
	c. Mercury	0.000003 lb per MMBtu of heat input.
	d. Carbon Monoxide	400 ppm by volume on a dry basis corrected to 7 percent oxygen (3-run average).
3. New or reconstructed small solid fuel	a. Particulate Matter (or Total Selected Metals)	0.025 lb per MMBtu of heat input; or (0.0003 lb per MMBtu of heat input).
	b. Hydrogen Chloride	0.02 lb per MMBtu of heat input.
	c. Mercury	0.000003 lb per MMBtu of heat input.
4. New reconstructed large liquid fuel	a. Particulate Matter	0.03 lb per MMBtu of heat input.
	b. Hydrogen Chloride	0.0005 lb per MMBtu of heat input.
	c. Carbon Monoxide	400 ppm by volume on a dry basis corrected to 3 percent oxygen (30-day rolling average for units 100 MMBtu/hr or greater, 3-run average for units less than 100 MMBtu/hr).
5. New or reconstructed limited use liquid fuel	a. Particulate Matter	0.03 lb per MMBtu of heat input.
	b. Hydrogen Chloride	0.0009 lb per MMBtu of heat input.
	c. Carbon Monoxide	400 ppm by volume on a dry basis liquid corrected to 3 percent oxygen (3-run average).
6. New or reconstructed small liquid fuel	a. Particulate Matter	0.03 lb per MMBtu of heat input.
	b. Hydrogen Chloride	0.0009 lb per MMBtu of heat input.
7. New reconstructed large gaseous fuel	Carbon Monoxide	400 ppm by volume on a dry basis corrected to 3 percent oxygen (30-day rolling average for units 100 MMBtu/hr or greater, 3-run average for units less than 100 MMBtu/hr).

TABLE 1 TO SUBPART DDDDD OF PART 63. — EMISSION LIMITS AND WORK PRACTICE STANDARDS - CONTINUED

As stated in §63.7500, you must comply with the following applicable emission limits and work practice standards:

If your boiler or process heater is in this subcategory...	For the following pollutants...	You must meet the following emission limits and work practice standards...
8. New or reconstructed limited use gaseous fuel	Carbon Monoxide	400 ppm by volume on a dry basis corrected to 3 percent oxygen (3-run average).
9. Existing large solid fuel	a. Particulate Matter (or Total Selected Metals)	0.07 lb per MMBtu of heat input; or (0.001 lb per MMBtu of heat input).
	b. Hydrogen Chloride	0.09 lb per MMBtu of heat input.
	c. Mercury	0.000009 lb per MMBtu of heat input.
10. Existing limited use solid fuel	Particulate Matter (or Total Selected Metals)	0.21 lb per MMBtu of heat input; or (0.004 lb per MMBtu of heat input).

TABLE 2 TO SUBPART DDDDD OF PART 63. — OPERATING LIMITS FOR BOILERS AND PROCESS HEATERS WITH PARTICULATE MATTER EMISSION LIMITS

As stated in §63.7500, you must comply with the applicable operating limits:

If you demonstrate compliance with applicable particulate	You must meet these operating limits...
1. Wet scrubber control	a. Maintain the minimum pressure drop and liquid flow-rate at or above the operating levels established during the performance test according to §63.7530(c) and Table 7 to this subpart that demonstrated compliance with the applicable emission limit for particulate matter.
2. Fabric filter control	a. Install and operate a bag leak detection system according to §63.7525 and operate the fabric filter such that the bag leak detection system alarm does not sound more than 5 percent of the operating time during each 6-month period; or
	b. This option is for boilers and process heaters that operate dry control systems. Existing boilers and process heaters must maintain opacity to less than or equal to 20 percent (6-minute average) except for one 6-minute period per hour of not more than 27 percent. New boilers and process heaters must maintain opacity to less than or equal to 10 percent opacity (1-hour block average).
3. Electrostatic precipitator control	a. This option is for boilers and process heaters that operate dry control systems. Existing boilers and process heaters must maintain opacity to less than or equal to 20 percent (6-minute average) except for one 6-minute period per hour of not more than 27 percent. New boilers and process heaters must maintain opacity to less than or equal to 10 percent opacity (1-hour block average); or
	b. This option is only for boilers and process heaters that operate additional wet control systems. Maintain the minimum voltage and secondary current or total power input of the electrostatic precipitator at or above the operating limits established during the performance test according to §63.7530(c) and Table 7 to this subpart that demonstrated compliance with the applicable emission limit for particulate matter
4. Any other control type	This option is for boilers and process heaters that operate dry control systems. Existing boilers and process heaters must maintain opacity to less than or equal to 20 percent (6-minute average) except for one 6-minute period per hour of not more than 27 percent. New boilers and process heaters must maintain opacity to less than or equal to 10 percent opacity (1-hour block average).

TABLE 3 TO SUBPART DDDDD OF PART 63. — OPERATING LIMITS FOR BOILERS AND PROCESS HEATERS WITH MERCURY EMISSION LIMITS AND BOILERS AND PROCESS HEATERS THAT CHOOSE TO COMPLY WITH THE ALTERNATIVE TOTAL SELECTED METALS EMISSION LIMITS

As stated in §63.7500, you must comply with the applicable operating limits:

If you demonstrate compliance with applicable mercury and/or total selected metals emission limits using...	You must meet these operating limits...
1. Wet scrubber control	Maintain the minimum pressure drop and liquid flow-rate at or above the operating levels established during the performance test according to §63.7530(c) and Table 7 to this subpart that demonstrated compliance with the applicable emission limits for mercury and/or total selected metals.
2. Fabric filter control	a. Install and operate a bag leak detection system according to §63.7525 and operate the fabric filter such that the bag leak detection system alarm does not sound more than 5 percent of the operating time during a 6-month period; or
	b. This option is for boilers and process heaters that operate dry control systems. Existing sources must maintain opacity to less than or equal to 20 percent (6-minute average) except for one 6-minute period per hour of not more than 27 percent. New sources must maintain opacity to less than or equal to 10 percent opacity (1-hour block average).
3. Electrostatic precipitator control	a. This option is for boilers and process heaters that operate dry control systems. Existing sources must maintain opacity to less than or equal to 20 percent (6-minute average) except for one 6-minute period per hour of not more than 27 percent. New sources must maintain opacity to less than or equal to 10 percent opacity (1-hour block average); or
	b. This option is only for boilers and process heaters that operate additional wet control systems. Maintain the minimum voltage and secondary current or total power input of the electrostatic precipitator at or above the operating limits established during the performance test according to §63.7530(c) and Table 7 to this subpart that demonstrated compliance with the applicable emission limits for mercury and/or total selected metals.
4. Dry scrubber or carbon injection control.	Maintain the minimum sorbent or carbon injection rate at or above the operating levels established during the performance test according to §63.7530(c) and Table 7 to this subpart that demonstrated compliance with the applicable emission limit for mercury.
5. Any other control type	This option is only for boilers and process heaters that operate dry control systems. Existing sources must maintain opacity to less than or equal to 20 percent (6-minute average) except for one 6-minute period per hour of not more than 27 percent. New sources must maintain opacity to less than or equal to 10 percent opacity (1-hour block average).
6. Fuel analysis	Maintain the fuel type or fuel mixture such that the mercury and/or total selected metals emission rates calculated according to §63.7530(d)(4) and/or (5) is less than the applicable emission limits for mercury and/or total selected metals.

TABLE 4 TO SUBPART DDDDD OF PART 63. — OPERATING LIMITS FOR BOILERS AND PROCESS HEATERS WITH HYDROGEN CHLORIDE EMISSION LIMITS

As stated in §63.7500, you must comply with the following applicable operating limits:

If you demonstrate compliance with applicable hydrogen chloride emission limits using...	You must meet these operating limits...
1. Wet scrubber control	Maintain the minimum scrubber effluent pH, pressure drop, and liquid flow-rate at or above the operating levels established during the performance test according to §63.7530(c) and Table 7 to this subpart that demonstrated compliance with the applicable emission limit for hydrogen chloride.
2. Dry scrubber control	Maintain the minimum sorbent injection rate at or above the operating levels established during the performance test according to §63.7530(c) and Table 7 to this subpart that demonstrated compliance with the applicable emission limit for hydrogen chloride.
3. Fuel analysis	Maintain the fuel type or fuel mixture such that the hydrogen chloride emission rate calculated according to §63.7530(d)(3) is less than the applicable emission limit for hydrogen chloride.

TABLE 5 TO SUBPART DDDDD OF PART 63. — PERFORMANCE TESTING REQUIREMENTS

As stated in §63.7520, you must comply with the following requirements for performance test for existing, new or reconstructed affected sources:

To conduct a performance test for the following pollutant…	You must…	Using…
1. Particulate Matter	a. Select sampling ports location and the number of traverse points.	Method 1 in appendix A to part 60 of this chapter.
	b. Determine velocity and volumetric flow-rate of the stack gas.	Method 2, 2F, or 2G in appendix A to part 60 of this chapter.
	c. Determine oxygen and carbon dioxide concentrations of the stack gas.	Method 3A or 3B in appendix A to part 60 of this chapter, or ASME PTC 19, Part 10 (1981) (IBR, see §63.14(i)).
	d. Measure the moisture content of the stack gas.	Method 4 in appendix A to part 60 of this chapter.
	e. Measure the particulate matter emission concentration.	Method 5 or 17 (positive pressure fabric filters must use Method 5D) in appendix A to part 60 of this chapter.
	f. Convert emissions concentration to lb per MMBtu emission rates.	Method 19 F-factor methodology in appendix A to part 60 of this chapter.
2. Total selected metals	a. Select sampling ports location and the number of traverse points.	Method 1 in appendix A to part 60 of this chapter.
	b. Determine velocity and volumetric flow-rate of the stack gas.	Method 2, 2F, or 2G in appendix A to part 60 of this chapter.
	c. Determine oxygen and carbon dioxide concentrations of the stack gas.	Method 3A or 3B in appendix A to part 60 of this chapter, or ASME PTC 19, Part 10 (1981) (IBR, see §63.14(i)).
	d. Measure the moisture content of the stack gas.	Method 4 in appendix A to part 60 of this chapter.
	e. Measure the total selected metals emission concentration.	Method 29 in appendix A to part 60 of this chapter.
	f. Convert emissions concentration to lb per MMBtu emission rates.	Method 19 F-factor methodology in appendix A to part 60 of this chapter.
3. Hydrogen Chloride	a. Select sampling ports location and the number of traverse points.	Method 1 in appendix A to part 60 of this chapter.
	b. Determine velocity and volumetric flow-rate of the stack gas.	Method 2, 2F, or 2G in appendix A to part 60 of this chapter.
	c. Determine oxygen and carbon dioxide concentrations of the stack gas.	Method 3A or 3B in appendix A to part 60 of this chapter, or ASME PTC 19, Part 10 (1981) (IBR, see §63.14(i)).
	d. Measure the moisture content of the stack gas.	Method 4 in appendix A to part 60 of this chapter.
	e. Measure the hydrogen chloride emission concentration.	Method 26 or 26A in appendix A to part 60 of this chapter.
	f. Convert emissions concentration to lb per MMBtu emission rates.	Method 19 F-factor methodology in appendix A to part 60 of this chapter.
4. Mercury	a. Select sampling ports location and the number of traverse points.	Method 1 in appendix A to part 60 of this chapter.
	b. Determine velocity and volumetric flow-rate of the stack gas.	Method 2, 2F, or 2G in appendix A to part 60 of this chapter.
	c. Determine oxygen and carbon dioxide concentrations of the stack gas.	Method 3A or 3B in appendix A to part 60 of this chapter, or ASME PTC 19, Part 10 (1981) (IBR, see §62.14(i)).
	d. Measure the moisture content of the stack gas.	Method 4 in appendix A to part 60 of this chapter.
	e. Measure the mercury emission concentration.	Method 29 in appendix A to part 60 of this chapter or Method 101A in appendix B to part 61 of this chapter or ASTM Method D6784-02 (IBR, see §63.14(b)).
	f. Convert emissions concentration to lb per MMBtu emission rates.	Method 19 F-factor methodology in appendix A to part 60 of this chapter.
5. Carbon Monoxide	a. Select the sampling ports location and the number of traverse points.	Method 1 in appendix A to part 60 of this chapter.
	b. Determine oxygen and carbon dioxide concentrations of the stack gas.	Method 3A or 3B in appendix A to part 60 of this chapter, or ASTM D6522-00 (IBR, see §63.14(b)), or ASME PTC 19, Part 10 (1981) (IBR, see §63.14(i)).
	c. Measure the moisture content of the stack gas.	Method 4 in appendix A to part 60 of this chapter.
	d. Measure the carbon monoxide emission concentration.	Method 10, 10A, or 10B in appendix A to part 60 of this chapter, or ASTM D6522-00 (IBR, see §63.14(b)) when the fuel is natural gas.

TABLE 6 TO SUBPART DDDDD OF PART 63.—FUEL ANALYSIS REQUIREMENTS As stated in §63.7521, you must comply with the following requirements for fuel analysis testing for existing, new or reconstructed affected sources:

To conduct a performance test for the following pollutant…	You must…	Using…
1. Mercury	a. Collect fuel samples	Procedure in §63.7521(c) or ASTM D2234–00 $^{\epsilon 1}$ (for coal)(IBR, see §63.14(b)) or ASTM D6323–98 (2003)(for biomass)(IBR, see §63.14(b)) or equivalent.
	b. Composite fuel samples	Procedure in §63.7521(d) or equivalent.
	c. Prepare composited fuel sample	SW–846–3050B (for solid samples) or SW– 846–3020A (for liquid samples) or ASTM D2013–01 (for coal) (IBR, see §63.14(b)) or ASTM D5198–92 (2003) (for bio-mass)(IBR, see §63.14(b)) or equivalent.
	d. Determine heat content of the fuel type	ASTM D5865–03a (for coal)(IBR, see §63.14(b)) or ASTM E711–87 (1996) (for biomass)(IBR, see §63.14(b)) or equivalent.
	e. Determine moisture content of the fuel type	ASTM D3173–02 (IBR, see §63.14(b)) or ASTM E871–82 (1998)(IBR, see §63.14(b)) or equivalent.
	f. Measure mercury concentration in fuel sample.	ASTM D3684–01 (for coal)(IBR, see §63.14(b)) or SW–846–7471A (for solid samples) or SW–846 7470A (for liquid samples).
	g. Convert concentrations into units of pounds of pollutant per MMBtu of heat content.	
2. Total selected metals	a. Collect fuel samples.	Procedure in §63.7521(c) or ASTM D2234–00 $^{\epsilon 1}$ (for coal)(IBR, see §63.14(b)) or ASTM D6323–98 (2003) (for biomass)(IBR, see §63.14(b)) or equivalent.
	b. Composite fuel samples	Procedure in §63.7521(d) or equivalent.
	c. Prepare composited fuel samples	SW–846–3050B (for solid samples) or SW– 846–3020A (for liquid samples) or ASTM D2013–01 (for coal)(IBR, see §63.14(b)) or ASTM D5198–92 (2003)(for biomass)(IBR, see §63.14(b)) or equivalent.
	d. Determine heat content of the fuel type	ASTM D5865–03a (for coal)(IBR, see §63.14(b)) or ASTM E 711–87 (for bio-mass)(IBR, see §63.14(b)) or equivalent.
	e. Determine moisture content of the fuel type	ASTM D3173–02 (IBR, see §63.14(b)) or ASTM E871 (IBR, see §63.14(b)) or equivalent.
	f. Measure total selected metals concentration in fuel sample.	SW–846–6010B or ASTM D3683–94 (2000) (for coal) (IBR, see §63.14(b)) or ASTM E885–88 (1996) (for biomass)(IBR, see §63.14(b)).
	g. Convert concentrations into units of pounds of pollutant per MMBtu of heat content.	
3. Hydrogen chloride	a. Collect fuel samples	Procedure in §63.7521(c) or ASTM D2234–00 $^{\epsilon 1}$ (for coal)(IBR, see §63.14(b)) or ASTM D6323–98 (2003) (for biomass)(IBR, see §63.14(b)) or equivalent.
	b. Composite fuel samples	Procedure in §63.7521(d) or equivalent.
	c. Prepare composited fuel samples	SW–846–3050B (for solid samples) or SW– 846–3020A (for liquid samples) or ASTM D2013–01 (for coal)(IBR, see §63.14(b)) or ASTM D5198–92 (2003) (for biomass) (IBR, see §63.14(b)) or equivalent.
	d. Determine heat content of the fuel type	ASTM D5865–03a (for coal)(IBR, see §63.14(b)) or ASTM E711–87 (1996) (for biomass)(IBR, see §63.14(b)) or equivalent.
	e. Determine moisture content of the fuel type	ASTM D3173–02 (IBR, see §63.14(b)) or ASTM E871–82 (1998)(IBR, see §63.14(b)) or equivalent.
	f. Measure chlorine concentration in fuel sample.	SW-846-9250 or ASTM E776-87 (1996) (for biomass) (IBR, see §63.14(b)) or equivalent.
	g. Convert concentrations into units of pounds of pollutant per MMBtu of heat content.	

TABLE 7 TO SUBPART DDDDD OF PART 63. — ESTABLISHING OPERATING LIMITS

As stated in §63.7520, you must comply with the following requirements for establishing operating limits:

If you have an applicable emission limit for...	And your operating limits are based on...	You must...	Using...	According to the following requirements...
1. Particulate matter, mercury, or total selected metals.	a. Wet scrubber operating parameters.	i. Establish a site-specific minimum pressure drop and minimum flow rate operating limit according to §63.7530(c).	(1) Data from the pressure drop and liquid flow rate monitors and the particulate matter, mercury, or total selected metals performance test.	(a) You must collect pressure drop and liquid flow-rate data every 15 minutes during the entire period of the performance tests; (b) Determine the average pressure drop and liquid flow-rate for each individual test run in the three-run performance test by computing the average of all the 15-minute readings taken during each test run.
	b. Electrostatic precipitator operating parameters (option only for units with additional wet scrubber control).	i. Establish a site-specific minimum voltage and secondary current or total power input according to §63.7530(c).	(1) Data from the pressure drop and liquid flow rate monitors and the particulate matter, mercury, or total selected metals performance test.	(a) You must collect voltage and secondary current or total power input data every 15 minutes during the entire period of the performance tests; (b) Determine the average voltage and secondary current or total power input for each individual test run in the three-run performance test by computing the average of all the 15-minute readings taken during each test run.
2. Hydrogen Chloride	a. Wet scrubber operating parameters.	i. Establish a site-specific minimum pressure drop and minimum flow rate operating limit according to §63.7530(c).	(1) Data from the pH, pressure drop, and liquid flow-rate monitors and the hydrogen chloride performance test.	(a) You must collect pH, pressure drop, and liquid flow-rate data every 15 minutes during the entire period of the performance tests; (b) Determine the average pH, pressure drop, and liquid flow-rate for each individual test run in the three-run performance test by computing the average of all the 15-minute readings taken during each test run.
	b. Dry scrubber operating parameters.	i. Establish a site-specific minimum sorbent injection rate operating limit according to §63.7530(c).	(1) Data from the sorbent injection rate monitors and hydrogen chloride performance test.	(a) You must collect sorbent injection rate data every 15 minutes during the entire period of the performance tests; (b) Determine the average sorbent injection rate for each individual test run in the three-run performance test by computing the average of all the 15 minute readings taken during each test run.

TABLE 8 TO SUBPART DDDDD OF PART 63. — DEMONSTRATING CONTINUOUS COMPLIANCE

As stated in §63.7540, you must show continuous compliance with the emission limitations for affected sources according to the following:

If you must meet the following operating limits or work practice standards...	You must demonstrate continuous compliance by...
1. Opacity	a. Collecting the opacity monitoring system data according to §§63.7525(b) and 63.7535; and b. Reducing the opacity monitoring data to 6-minute averages; and c. Maintaining opacity to less than or equal to 20 percent (6-minute average) except for one 6-minute period per hour of not more than 27 percent for existing sources; or maintaining opacity to less than or equal to 10 percent (1-hour block average) for new sources.
2. Fabric Filter Bag Leak Detection Operation	Installing and operating a bag leak detection system according to §63.7525 and operating the fabric filter such that the requirements in §63.7540(a)(9) are met.
3. Wet Scrubber Pressure Drop and Liquid Flow-rate	a. Collecting the pressure drop and liquid flow rate monitoring system data according to §§63.7525 and 63.7535; and b. Reducing the data to 3-hour block averages; and c. Maintaining the 3-hour average pressure drop and liquid flow-rate at or above the operating limits established during the performance test according to §63.7530(c).
4. Wet Scrubber pH	a. Collecting the pH monitoring system data according to §§63.7525 and 63.7535; and b. Reducing the data to 3-hour block averages; and c. Maintaining the 3-hour average pH at or above the operating limit established during the performance test according to §63.7530(c).
5. Dry Scrubber Sorbent or Carbon Injection Rate	a. Collecting the sorbent or carbon injection rate monitoring system data for the dry scrubber according to §§63.7525 and 63.7535; and b. Reducing the data to 3-hour block averages; and c. Maintaining the 3-hour average sorbent or carbon injection rate at or above the operating limit established during the performance test according to §§63.7530(c).
6. Electrostatic Precipitator Secondary Current and Voltage or Total Power Input	a. Collecting the secondary current and voltage or total power input monitoring system data for the electrostatic precipitator according to §§63.7525 and 63.7535; and b. Reducing the data to 3-hour block averages; and c. Maintaining the 3-hour average secondary current and voltage or total power input at or above the operating limits established during the performance test according to §§63.7530(c).
7. Fuel Pollutant Content	a. Only burning the fuel types and fuel mixtures used to demonstrate compliance with the applicable emission limit according to §63.7530(c) or (d) as applicable; and b. Keeping monthly records of fuel use according to §63.7540(a).

TABLE 9 TO SUBPART DDDDD OF PART 63. — REPORTING REQUIREMENTS

As stated in §63.7550, you must comply with the following requirements for reports:

You must submit a(n)	The report must contain . .	You must submit the report...
1. Compliance report	a. Information required in §63.7550(c)(1) through (11); and b. If there are no deviations from any emission limitation (emission limit and operating limit) that applies to you and there are no deviations from the requirements for work practice standards in Table 8 to this subpart that apply to you, a statement that there were no deviations from the emission limitations and work practice standards during the reporting period. If there were no periods during which the CMSs, including continuous emissions monitoring system, continuous opacity monitoring system, and operating parameter monitoring systems, were out-of-control as specified in §63.8(c)(7), a statement that there were no periods during which the CMSs were out-of-control during the reporting period; and c. If you have a deviation from any emission limitation (emission limit and operating limit) or work practice standard during the reporting period, the report must contain the information in §63.7550(d). If there were periods during which the CMSs, including continuous emissions monitoring system, continuous opacity monitoring system, and operating parameter monitoring systems, were out-of-control, as specified in §63.8(c)(7), the report must contain the information in §63.7550(e); and d. If you had a startup, shutdown, or malfunction during the reporting period and you took actions consistent with your startup, shutdown, and malfunction plan, the compliance report must include the information in §63.10(d)(5)(i)	Semiannually according to the requirements in §63.7550(b).
2. An immediate startup, shutdown, and malfunction report if you had a startup, shutdown, or malfunction during the reporting period that is not consistent with your startup, shutdown, and malfunction plan, and the source exceeds any applicable emission limitation in the relevant emission standard.	a. Actions taken for the event; and	i. By fax or telephone within 2 working days after starting actions inconsistent with the plan; and
	b. The information in §63.10(d)(5)(ii)	ii. By letter within 7 working days after the end of the event unless you have made alternative arrangements with the permitting authority.

TABLE 10 TO SUBPART DDDDD OF PART 63. — APPLICABILITY OF GENERAL PROVISIONS TO SUBPART DDDDD

As stated in §63.7565, you must comply with the applicable General Provisions according to the following:

Citation	Subject	Brief description	Applicable
§63.1	Applicability	Initial Applicability Determination; Applicability After Standard Established; Permit Requirements; Extensions, Notifications.	Yes.
§63.2	Definitions	Definitions for part 63 standards.	Yes.
§63.3	Units and Abbreviations	Units and abbreviations for part 63 standards.	Yes.
§63.4	Prohibited Activities	Prohibited Activities; Compliance date; Circumvention, Severability.	Yes.
§63.5	Construction/Reconstruction	Applicability, applications; approvals.	Yes.
§63.6(a)	Applicability	GP apply unless compliance extension; and GP apply to area sources that become major.	Yes.
§63.6(b)(1)–(4)	Compliance Dates for New and Reconstructed sources	Standards apply at effective date; 3 years after effective date; upon startup; 10 years after construction or reconstruction commences for 112(f)	Yes.
§63.6(b)(5)	Notification	Must notify if commenced construction or reconstruction after proposal.	Yes.
§63.6(b)(6)	[Reserved]		
§63.6(b)(7)	Compliance Dates for New and Reconstructed Area Sources That Become Major	Area sources that become major must comply with major source standards immediately upon becoming major, regardless of whether required to comply when they were an area source.	Yes.
§63.6(c)(1)–(2)	Compliance Dates for Existing Sources	Comply according to date in subpart, which must be no later than 3 years after effective date; and for 112(f) standards, comply within 90 days of effective date unless compliance extension.	Yes.
§63.6(c)(3)–(4)	[Reserved]		

TABLE 10 TO SUBPART DDDDD OF PART 63. -APPLICABILITY OF GENERAL PROVISIONS TO SUBPART DDDDD- Continued

As stated in §63.7565, you must comply with the applicable General Provisions according to the following:

Citation	Subject	Brief description	Applicable
§63.6(c)(5)	Compliance Dates for Existing Area Sources That Become Major.	Area sources that become major must comply with major source standards by date indicated in subpart or by equivalent time period (for example, 3 years).	Yes.
§63.6(d)	[Reserved].		
§63.6(e)(1)–(2)	Operation & Maintenance	Operate to minimize emissions at all times; and Correct malfunctions as soon as practicable; and Operation and maintenance requirements independently enforceable; information Administrator will use to determine if operation and maintenance requirements were met.	Yes.
§63.6(e)(3)	Startup, Shutdown, and Malfunction Plan (SSMP).	Requirement for SSM and startup, shutdown, malfunction plan; and content of SSMP.	Yes.
§63.6(f)(1)	Compliance Except During SSM	Comply with emission standards at all times except during SSM.	Yes.
§63.6(f)(2)–(3)	Methods for Determining Compliance	Compliance based on performance test, operation and maintenance plans, records, inspection.	Yes.
§63.6(g)(1)–(3)	Alternative Standard	Procedures for getting an alternative standard.	Yes.
§63.6(h)(1)	Compliance with Opacity/VE Standards	Comply with opacity/VE emission limitations at all times except during SSM.	Yes.
§63.6(h)(2)(i)	Determining Compliance with Opacity/ Visible Emission (VE) Standards.	If standard does not state test method, use Method 9 for opacity and Method 22 for VE.	No.
§63.6(h)(2)(ii)	[Reserved].		
§63.6(h)(2)(iii)	Using Previous Tests to Demonstrate Compliance with Opacity/VE Standards	Criteria for when previous opacity/VE testing can be used to show compliance with this subpart.	Yes.
§63.6(h)(3)	[Reserved].		
§63.6(h)(4)	Notification of Opacity/VE Observation Date.	Notify Administrator of anticipated date of observation.	No.
§63.6(h)(5)(i),(iii)–(v)	Conducting Opacity/VE Observations	Dates and Schedule for conducting opacity/VE observations.	No.
§63.6(h)(5)(ii)	Opacity Test Duration and Averaging Times.	Must have at least 3 hours of observation with thirty, 6-minute averages.	No.
§63.6(h)(6)	Records of Conditions During Opacity/VE observations.	Keep records available and allow Administrator to inspect.	No.
§63.6(h)(7)(i)	Report continuous opacity monitoring system Monitoring Data from Performance Test.	Submit continuous opacity monitoring system data with other performance test data.	Yes.
§63.6(h)(7)(ii)	Using continuous opacity monitoring system instead of Method 9.	Can submit continuous opacity monitoring system data instead of Method 9 results even if subpart requires Method 9, but must notify Administrator before performance test.	No.
§63.6(h)(7)(iii)	Averaging time for continuous opacity monitoring system during performance test.	To determine compliance, must reduce continuous opacity monitoring system data to 6-minute averages.	Yes.
§63.6(h)(7)(iv)	Continuous opacity monitoring system requirements.	Demonstrate that continuous opacity monitoring system performance evaluations are conducted according to §§63.8(e), continuous opacity monitoring systems are properly maintained and operated according to §63.8(c) and data quality as §63.8(d).	Yes.
§63.6(h)(7)(v)	Determining Compliance with Opacity/VE Standards.	Continuous opacity monitoring system is probative but not conclusive evidence of compliance with opacity standard, even if Method 9 observation shows otherwise. Requirements for continuous opacity monitoring system to be probative evidence-proper maintenance, meeting PS 1, and data have not been altered.	Yes.
§63.6(h)(8)	Determining Compliance with Opacity/VE Standards.	Administrator will use all continuous opacity monitoring system, Method 9, and Method 22 results, as well as information about operation and maintenance to determine compliance.	Yes.
§63.6(h)(9)	Adjusted Opacity Standard	Procedures for Administrator to adjust an opacity standard.	Yes.
§63.6(i)(1)–(14)	Compliance Extension	Procedures and criteria for Administrator to grant compliance extension.	Yes.
§63.6(j)	Presidential Compliance Exemption	President may exempt source category from requirement to comply with rule.	Yes.

TABLE 10 TO SUBPART DDDDD OF PART 63. -APPLICABILITY OF GENERAL PROVISIONS TO SUBPART DDDDD-Continued

As stated in §63.7565, you must comply with the applicable General Provisions according to the following:

Citation	Subject	Brief description	Applicable
§63.7(a)(1)	Performance Test Dates	Dates for conducting Initial Performance Testing and Other Compliance Demonstrations	Yes.
§63.7(a)(2)	Performance Test Dates	New source with initial startup date before effective date has 180 days after effective date to demonstrate compliance	Yes.
§63.7(a)(2)(ii–viii)	[Reserved].		
§63.7(a)(2)(ix)	Performance Test Dates	1. New source that commenced construction between proposal and promulgation dates, when promulgated standard is more stringent than proposed standard, has 180 days after effective date or 180 days after startup of source, whichever is later, to demonstrate compliance, and,	Yes.
		2. If source initially demonstrates compliance with less stringent proposed standard, it has 3 years and 180 days after the effective date of the standard or 180 days after startup of source, whichever is later, to demonstrate compliance with promulgated standard.	No.
§63.7(a)(3)	Section 114 Authority	Administrator may require a performance test under CAA Section 114 at any time.	Yes.
§63.7(b)(1)	Notification of Performance Test	Must notify Administrator 60 days before the test.	No.
§63.7(b)(2)	Notification of Rescheduling	If rescheduling a performance test is necessary, must notify Administrator 5 days before scheduled date of rescheduled date.	Yes.
§63.7(c)	Quality Assurance/Test Plan	Requirement to submit site-specific test plan 60 days before the test or on date Administrator agrees with: test plan approval procedures; and performance audit requirements; and internal and external QA procedures for testing.	Yes.
§63.7(d)	Testing Facilities	Requirements for testing facilities	Yes.
§63.7(e)(1)	Conditions for Conducting Performance Tests.	1. Performance tests must be conducted under representative conditions; and	No.
		2. Cannot conduct performance tests during SSM; and	Yes.
		3. Not a deviation to exceed standard during SSM; and	Yes.
		4. Upon request of Administrator, make available records necessary to determine conditions of performance tests.	Yes.
§63.7(e)(2)	Conditions for Conducting Performance Tests.	Must conduct according to rule and EPA test methods unless Administrator approves alternative.	Yes.
§63.7(e)(3)	Test Run Duration	Must have three separate test runs; and Compliance is based on arithmetic mean of three runs; and conditions when data from an additional test run can be used.	Yes.
§63.7(e)(4)	Interaction with other sections of the Act	Nothing in §63.7(e)(1) through (4) can abrogate the Administrator's authority to require testing under Section 114 of the Act.	Yes.
§63.7(f)	Alternative Test Method	Procedures by which Administrator can grant approval to use an alternative test method.	Yes.
§63.7(g)	Performance Test Data Analysis	Must include raw data in performance test report; and must submit performance test data 60 days after end of test with the Notification of Compliance Status; and keep data for 5 years.	Yes.
§63.7(h)	Waiver of Tests	Procedures for Administrator to waive performance test.	Yes.
§63.8(a)(1)	Applicability of Monitoring Requirements	Subject to all monitoring requirements in standard.	Yes.
§63.8(a)(2)	Performance Specifications	Performance Specifications in appendix B of part 60 apply.	Yes.
§63.8(a)(3)	[Reserved].		
§63.8(a)(4)	Monitoring with Flares	Unless your rule says otherwise, the requirements for flares in §63.11 apply.	No.
§63.8(b)(1)(i)–(ii)	Monitoring	Must conduct monitoring according to standard unless Administrator approves alternative.	Yes.
§63.8(b)(1)(iii)	Monitoring	Flares not subject to this section unless otherwise specified in relevant standard.	No.

TABLE 10 TO SUBPART DDDDD OF PART 63. -APPLICABILITY OF GENERAL PROVISIONS TO SUBPART DDDDD- Continued

As stated in §63.7565, you must comply with the applicable General Provisions according to the following:

Citation	Subject	Brief description	Applicable
§63.8(b)(2)–(3)	Multiple Effluents and Multiple Monitoring Systems	Specific requirements for installing monitoring systems; and must install on each effluent before it is combined and before it is released to the atmosphere unless Administrator approves otherwise; and if more than one monitoring system on an emission point, must report all monitoring system results, unless one monitoring system is a backup.	Yes.
§63.8(c)(1)	Monitoring System Operation and Maintenance.	Maintain monitoring system in a manner consistent with good air pollution control practices.	Yes.
§63.8(c)(1)(i)	Routine and Predictable SSM	Maintain and operate CMS according to §63.6(e)(1).	Yes.
§63.8(c)(1)(ii)	SSM not in SSMP	Must keep necessary parts available for routine repairs of CMSs.	Yes.
§63.8(c)(1)(iii)	Compliance with Operation and Maintenance Requirements.	Must develop and implement an SSMP for CMSs.	Yes.
§63.8(c)(2)–(3)	Monitoring System Installation	Must install to get representative emission and parameter measurements; and must verify operational status before or at performance test.	Yes.
§63.8(c)(4)	Continuous Monitoring System (CMS) Requirements.	CMSs must be operating except during breakdown, out-of-control, repair, maintenance, and high-level calibration drifts.	No.
§63.8(c)(4)(i)	Continuous Monitoring System (CMS) Requirements.	Continuous opacity monitoring system must have a minimum of one cycle of sampling and analysis for each successive 10-second period and one cycle of data recording for each successive 6 minute period.	Yes.
§63.8(c)(4)(ii)	Continuous Monitoring System (CMS) Requirements.	Continuous emissions monitoring system must have a minimum of one cycle of operation for each successive 15 minute period.	No.
§63.8(c)(5)	Continuous Opacity Monitoring system (COMS) Requirements.	Must do daily zero and high level calibrations.	Yes.
§63.8(c)(6)	Continuous Monitoring System (CMS) Requirements.	Must do daily zero and high level calibrations.	No.
§63.8(c)(7)–(8)	Continuous Monitoring Systems Requirements.	Out-of-control periods, including reporting.	Yes.
§63.8(d)	Continuous Monitoring Systems Quality Control.	Requirements for continuous monitoring systems quality control, including calibration, etc.; and must keep quality control plan on record for the life of the affected source. Keep old versions for 5 years after revisions.	Yes.
§63.8(e)	Continuous monitoring systems Performance Evaluation.	Notification, performance evaluation test plan, reports.	Yes.
§63.8(f)(1)–(5)	Alternative Monitoring Method	Procedures for Administrator to approve alternative monitoring.	Yes.
§63.8(f)(6)	Alternative to Relative Accuracy Test	Procedures for Administrator to approve alternative relative accuracy tests for continuous emissions monitoring system.	No.
§63.8(g)(1)–(4)	Data Reduction	Continuous opacity monitoring system 6 minute averages calculated over at least 36 evenly spaced data points; and continuous emissions monitoring system 1-hour averages computed over at least 4 equally spaced data points.	Yes.
§63.8(g)(5)	Data Reduction	Data that cannot be used in computing averages for continuous emissions monitoring system and continuous opacity monitoring system.	No.
§63.9(a)	Notification Requirements	Applicability and State Delegation	Yes.
§63.9(b)(1)–(5)	Initial Notifications	Submit notification 120 days after effective date; and Notification of intent to construct/reconstruct; and Notification of commencement of construct/reconstruct; Notification of startup; and Contents of each.	Yes.
§63.9(c)	Request for Compliance Extension	Can request if cannot comply by date or if installed BACT/LAER.	Yes.
§63.9(d)	Notification of Special Compliance Requirements for New Source.	For sources that commence construction between proposal and promulgation and want to comply 3 years after effective date.	Yes.
§63.9(e)	Notification of Performance Test	Notify Administrator 60 days prior	No.
§63.9(f)	Notification of VE/Opacity Test	Notify Administrator 30 days prior	No.
§63.9(g)	Additional Notifications When Using Continuous Monitoring Systems.	Notification of performance evaluation; and notification using continuous opacity monitoring system data; and notification that exceeded criterion for relative accuracy.	Yes.

TABLE 10 TO SUBPART DDDDD OF PART 63. -APPLICABILITY OF GENERAL PROVISIONS TO SUBPART DDDDD-Continued

As stated in §63.7565, you must comply with the applicable General Provisions according to the following:

Citation	Subject	Brief description	Applicable
§63.9(h)(1)–(6)	Notification of Compliance Status	Contents; and due 60 days after end of performance test or other compliance demonstration, and when to submit to Federal vs. State authority.	Yes.
§63.9(i)	Adjustment of Submittal Deadlines	Procedures for Administrator to approve change in when notifications must be submitted.	Yes.
§63.9(j)	Change in Previous Information	Must submit within 15 days after the change.	Yes.
§63.10(a)	Recordkeeping/Reporting	Applies to all, unless compliance extension; and when to submit to Federal vs. State authority; and procedures for owners of more than 1 source.	Yes.
§63.10(b)(1)	Recordkeeping/Reporting	General Requirements; and keep all records readily available and keep for 5 years.	Yes.
§63.10(b)(2)(i)–(v)	Records related to Startup, Shutdown, and Malfunction.	Occurrence of each of operation (process, equipment); and occurrence of each malfunction of air pollution equipment; and maintenance of air pollution control equipment; and actions during startup, shutdown, and malfunction.	Yes.
§63.10(b)(2)(vi) and (x–xi)	Continuous monitoring systems Records	Malfunctions, inoperative, out-of-control; and calibration checks; and adjustments, maintenance.	Yes.
§63.10(b)(2)(vii)–(ix)	Records	Measurements to demonstrate compliance with emission limitations; and performance test, performance evaluation, and visible emission observation results; and measurements to determine conditions of performance tests and performance evaluations.	Yes.
§63.10(b)(2)(xii)	Records	Records when under waiver	Yes.
§63.10(b)(2)(xiii)	Records	Records when using alternative to relative accuracy test.	No.
§63.10(b)(2)(xiv)	Records	All documentation supporting Initial Notification and Notification of Compliance Status.	Yes.
§63.10(b)(3)	Records	Applicability Determinations	Yes.
§63.10(c)(1),(5)–(8),(10)–(15)	Records	Additional Records for continuous monitoring systems.	Yes.
§63.10(c)(7)–(8)	Records	Records of excess emissions and parameter monitoring exceedances for continuous monitoring systems.	No.
§63.10(d)(1)	General Reporting Requirements	Requirement to report	Yes.
§63.10(d)(2)	Report of Performance Test Results	When to submit to Federal or State authority.	Yes.
§63.10(d)(3)	Reporting Opacity or VE Observations	What to report and when	Yes.
§63.10(d)(4)	Progress Reports	Must submit progress reports on schedule if under compliance extension.	Yes.
§63.10(d)(5)	Startup, Shutdown, and Malfunction Reports.	Contents and submission	Yes.
§63.10(e)(1)(2)	Additional continuous monitoring systems Reports.	Must report results for each CEM on a unit; and written copy of performance evaluation; and 3 copies of continuous opacity monitoring system performance evaluation.	Yes.
§63.10(e)(3)	Reports	Excess Emission Reports	No.
§63.10(e)(3)(i–iii)	Reports	Schedule for reporting excess emissions and parameter monitor exceedance (now defined as deviations).	No.
§63.10(e)(3)(iv–v)	Excess Emissions Reports	Requirement to revert to quarterly submission if there is an excess emissions and parameter monitor exceedance (now defined as deviations); and provision to request semiannual reporting after compliance for one year; and submit report by 30th day following end of quarter or calendar half; and if there has not been an exceedance or excess emission (now defined as deviations), report contents is a statement that there have been no deviations.	No.
§63.10(e)(3)(iv–v)	Excess Emissions Reports	Must submit report containing all of the information in §63.10(c)(5–13), §63.8(c)(7–8).	No.
§63.10(e)(3)(vi–viii)	Excess Emissions Report and Summary Report	Requirements for reporting excess emissions for continuous monitoring systems (now called deviations); Requires all of the information in §63.10(c)(5- 13), §63.8(c)(7–8).	No.
§63.10(e)(4)	Reporting continuous opacity monitoring system data.	Must submit continuous opacity monitoring system data with performance test data.	Yes.

TABLE 10 TO SUBPART DDDDD OF PART 63. -APPLICABILITY OF GENERAL PROVISIONS TO SUBPART DDDDD- Continued

As stated in §63.7565, you must comply with the applicable General Provisions according to the following:

Citation	Subject	Brief description	Applicable
§63.10(f)	Waiver for Recordkeeping/Reporting	Procedures for Administrator to waive	Yes.
§63.11	Flares	Requirements for flares	No.
§63.12	Delegation	State authority to enforce standards	Yes.
§63.13	Addresses	Addresses where reports, notifications, and requests are sent.	Yes
§63.14	Incorporation by Reference	Test methods incorporated by reference	Yes.
§63.15	Availability of Information	Public and confidential Information	Yes.

Appendix A to Subpart DDDDD—Methodology and Criteria for Demonstrating Eligibility for the Health-Based Compliance Alternatives Specified for the Large Solid Fuel Subcategory

1. Purpose/Introduction

This appendix provides the methodology and criteria for demonstrating that your affected source is eligible for the compliance alternative for the HCl emission limit and/or the total selected metals (TSM) emission limit. This appendix specifies emissions testing methods that you must use to determine HCl, chlorine, and manganese emissions from the affected units and what parts of the affected source facility must be included in the eligibility demonstration. You must demonstrate that your affected source is eligible for the health-based compliance alternatives using either a lookup table analysis (based on the look-up tables included in this appendix) or a site-specific compliance demonstration performed according to the criteria specified in this appendix. This appendix also specifies how and when you file any eligibility demonstrations for your affected source and how to show that your affected source remains eligible for the health-based compliance alternatives in the future.

2. Who Is Eligible To Demonstrate That They Qualify for the Health-Based Compliance Alternatives?

Each new, reconstructed, or existing affected source may demonstrate that they are eligible for the health-based compliance alternatives. Section 63.7490 of subpart DDDDD defines the affected source and explains which affected sources are new, existing, or reconstructed.

3. What Parts of My Facility Have To Be Included in the Health-Based Eligibility Demonstration?

If you are attempting to determine your eligibility for the compliance alternative for HCl, you must include every emission point subject to subpart DDDDD that emits either HCl or Cl_2 in the eligibility demonstration.

If you are attempting to determine your eligibility for the compliance alternative for TSM, you must include every emission point subject to subpart DDDDD that emits manganese in the eligibility demonstration.

4. How Do I Determine HAP Emissions From My Affected Source?

(a) You must conduct HAP emissions tests or fuel analysis for every emission point covered under subpart DDDDD within the affected source facility according to the requirements in paragraphs (b) through (f) of this section and the methods specified in Table 1 of this appendix.

(1) If you are attempting to determine your eligibility for the compliance alternative for HCl, you must test the subpart DDDDD units.

at your facility for both HCl and Cl_2. When conducting fuel analysis, you must assume any chlorine detected will be emitted as Cl_2.

(2) If you are attempting to determine your eligibility for the compliance alternative for TSM, you must test the subpart DDDDD units at your facility for manganese.

(b) *Periods when emissions tests must be conducted.*

(1) You must not conduct emissions tests during periods of startup, shutdown, or malfunction, as specified in §63.7(e)(1).

(2) You must test under worst-case operating conditions as defined in this appendix. You must describe your worst-case operating conditions in your performance test report for the process and control systems (if applicable) and explain why the conditions are worst-case.

(c) *Number of test runs.* You must conduct three separate test runs for each test required in this section, as specified in §63.7(e)(3). Each test run must last at least 1 hour.

(d) *Sampling locations.* Sampling sites must be located at the outlet of the control device and prior to any releases to the atmosphere.

(e) *Collection of monitoring data for HAP control devices.* During the emissions test, you must collect operating parameter monitoring system data at least every 15 minutes during the entire emissions test and establish the site-specific operating requirements in Tables 3 or 4, as appropriate, of subpart DDDDD using data from the monitoring system and the procedures specified in §63.7530 of subpart DDDDD.

(f) *Nondetect data.* You may treat emissions of an individual HAP as zero if all of the test runs result in a nondetect measurement and the condition in paragraph (f)(1) of this section is met for the manganese test method. Otherwise, nondetect data for individual HAP must be treated as one-half of the method detection limit.

(1) For manganese measured using Method 29 in appendix A to 40 CFR part 60, you analyze samples using atomic absorption spectroscopy (AAS).

(g) You must determine the maximum hourly emission rate for each appropriate emission point according to Equation 1 of this appendix.

$$\text{Max Hourly Emissions} = \sum_{i=1}^{n} (Er \times Hm) \quad \text{(Eq. 1)}$$

Where:

Max Hourly Emissions = Maximum hourly emissions for hydrogen chloride, chlorine, or manganese, in units of pounds per hour.

Er = Emission rate (the 3-run average as determined according to Table 1 of this appendix or the pollutant concentration in the fuel samples analyzed according to §63.7521) for hydrogen chloride, chlorine, or manganese, in units of pounds per million Btu of heat input.

Hm = Maximum rated heat input capacity of appropriate emission point, in units of million Btu per hour.

5. What Are the Criteria for Determining If My Facility Is Eligible for the Health-Based Compliance Alternatives?

(a) Determine the HAP emissions from each appropriate emission point within the affected source facility using the procedures specified in section 4 of this appendix.

(b) Demonstrate that your facility is eligible for either of the health-based compliance alternatives using either the methods described in section 6 of this appendix (look-up table analysis) or section 7 of this appendix (site-specific compliance demonstration).

(c) Your facility is eligible for the health-based compliance alternative for HCl if one of the following two statements is true:

(1) The calculated HCl-equivalent emission rate is below the appropriate value in the look-up table;

(2) Your site-specific compliance demonstration indicates that your maximum HI for HCl and Cl_2 at a location where people live is less than or equal to 1.0;

(d) Your facility is eligible for the health-based compliance alternative for TSM if one of the following two statements is true:

(1) The manganese emission rate for all your subpart DDDDD sources is below the appropriate value in the look-up table;

(2) Your site-specific compliance demonstration indicates that your maximum HQ for manganese at a location where people live is less than or equal to 1.0.

6. How Do I Conduct a Look-Up Table Analysis?

You may use look-up tables to demonstrate that your facility is eligible for either the compliance alternative for the HCl emission limit or the compliance alternative for TSM emission limit.

(a) *HCl health-based compliance alternative.* (1) To calculate the total toxicity-weighted HCl-equivalent emission rate for your facility, first calculate the total affected source emission rate of HCl by summing the maximum hourly HCl emission rates from all your subpart DDDDD sources. Then, similarly, calculate the total affected source emission rate for Cl_2. Finally, calculate the toxicity-weighted emission rate (expressed in HCl equivalents) according to Equation 2 of this appendix.

$$ER_{tw} = \sum \left(ER_i \times \left(RfC_{HCl}/RfC_i\right)\right) \quad \text{(Eq. 2)}$$

Where:

ER_{tw} is the HCl-equivalent emission rate, lb/hr.

ER_i is the emission rate of HAP i in lbs/hr

RfC_i is the reference concentration of HAP i

RfC_{HCl} is the reference concentration of HCl (RfCs for HCl and Cl_2 can be found at *http://www.epa.gov/ttn/atw/toxsource/summary.html)*.

(2) The calculated HCl-equivalent emission rate will then be compared to the appropriate allowable emission rate in Table 2 of this appendix. To determine the correct value from the table, an average value for the appropriate subpart DDDDD emission points should be used for stack height and the minimum distance between any appropriate subpart DDDDD stack at the facility and the property boundary should be used for property boundary distance. Appropriate emission points and stacks are those that emit HCl and/or Cl_2. If one or both of these values does not match the exact values in the lookup tables, then use the next lowest table value. (**Note:** If your average stack height is less than 5 meters, you must use the 5 meter row.) Your facility is eligible to comply with the health-based alternative HCl emission limit if your toxicity-weighted HCl equivalent emission rate, determined using the methods specified in this appendix, does not exceed the appropriate value in Table 2 of this appendix.

(b) *TSM Compliance Alternative.* To calculate the total manganese emission rate for your affected source, sum the maximum hourly manganese emission rates for all your subpart DDDDD sources. The calculated manganese emission rate will then be compared to the allowable emission rate in the Table 3 of this appendix. To determine the correct value from the table, an average value for the appropriate subpart DDDDD emission points should be used for stack height and the minimum distance between any appropriate subpart DDDDD stack at the facility and the property boundary should be used for property boundary distance. Appropriate emission points and stacks are those that emit manganese. If one or both of these values does not match the exact values in the lookup tables, then use the next lowest table value. (**Note:** If your average stack height is less than 5 meters, you must use the 5 meter row.) Your facility may exclude manganese when demonstrating compliance with the TSM emission limit if your manganese emission rate, determined using the methods specified in this appendix, does not exceed the appropriate value specified in Table 3 of this appendix.

7. How Do I Conduct a Site-Specific Compliance Demonstration?

If you fail to demonstrate that your facility is able to comply with one or both of the alternative health-based emission standards using the look-up table approach, you may choose to perform a site-specific compliance demonstration for your facility. You may use any scientifically-accepted peer-reviewed risk assessment methodology for your site-specific compliance demonstration. An example of one approach for performing a site-specific compliance demonstration for air toxics can be found in the EPA's "Air Toxics Risk Assessment Reference Library, Volume 2, Site-Specific Risk Assessment Technical Resource Document", which may be obtained through the EPA's Air Toxics Web site at *http://www.epa.gov/ttn/fera/ risk_atoxic.html*

(a) Your facility is eligible for the HCl alternative compliance option if your site-specific compliance demonstration shows that the maximum HI for HCl and Cl_2 from your subpart DDDDD sources is less than or equal to 1.0.

(b) Your facility is eligible for the TSM alternative compliance option if your site-specific compliance demonstration shows that the maximum HQ for manganese from your subpart DDDDD sources is less than or equal to 1.0.

(c) At a minimum, your site-specific compliance demonstration must:

(1) Estimate long-term inhalation exposures through the estimation of annual or multi-year average ambient concentrations;

(2) Estimate the inhalation exposure for the individual most exposed to the facility's emissions;

(3) Use site-specific, quality-assured data wherever possible;

(4) Use health-protective default assumptions wherever site-specific data are not available, and;

(5) Contain adequate documentation of the data and methods used for the assessment so that it is transparent and can be reproduced by an experienced risk assessor and emissions measurement expert.

(d) Your site-specific compliance demonstration need not:

(1) Assume any attenuation of exposure concentrations due to the penetration of outdoor pollutants into indoor exposure areas;

(2) Assume any reaction or deposition of the emitted pollutants during transport from the emission point to the point of exposure.

8. What Must My Health-Based Eligibility Demonstration Contain?

(a) Your health-based eligibility demonstration must contain, at a minimum, the information specified in paragraphs (a)(1) through (6) of this section.

(1) Identification of each appropriate emission point at the affected source facility, including the maximum rated capacity of each appropriate emission point.

(2) Stack parameters for each appropriate emission point including, but not limited to, the parameters listed in paragraphs (a)(2)(i) through (iv) below:

(i) Emission release type.

(ii) Stack height, stack area, stack gas temperature, and stack gas exit velocity.

(iii) Plot plan showing all emission points, nearby residences, and fenceline.

(iv) Identification of any control devices used to reduce emissions from each appropriate emission point.

(3) Emission test reports for each pollutant and appropriate emission point which has been tested using the test methods specified in

Table 1 of this appendix, including a description of the process parameters identified as being worst case. Fuel analyses for each fuel and emission point which has been conducted including collection and analytical methods used.

(4) Identification of the RfC values used in your look-up table analysis or site-specific compliance demonstration.

(5) Calculations used to determine the HCl-equivalent or manganese emission rates according to sections 6(a) or (b) of this appendix.

(6) Identification of the controlling process factors (including, but not limited to, fuel type, heat input rate, type of control devices, process parameters reflecting the emissions rates used for your eligibility demonstration) that will become Federally enforceable permit conditions used to show that your facility remains eligible for the health-based compliance alternatives.

(b) If you use the look-up table analysis in section 6 of this appendix to demonstrate that your facility is eligible for either health-based compliance alternative, your eligibility demonstration must contain, at a minimum, the information in paragraphs (a) and (b)(1) through (3) of this section.

(1) Calculations used to determine the average stack height of the subpart DDDDD emission points that emit either manganese or HCl and Cl_2.

(2) Identification of the subpart DDDDD emission point, that emits either manganese or HCl and Cl_2, with the minimum distance to the property boundary of the facility.

(3) Comparison of the values in the look-up tables (Tables 2 and 3 of this appendix) to your maximum HCl-equivalent or manganese emission rates.

(c) If you use a site-specific compliance demonstration as described in section 7 of this appendix to demonstrate that your facility is eligible, your eligibility demonstration must contain, at a minimum, the information in paragraphs (a) and (c)(1) through (7) of this section:

(1) Identification of the risk assessment methodology used.

(2) Documentation of the fate and transport model used.

(3) Documentation of the fate and transport model inputs, including the information described in paragraphs (a)(1) through (5) of this section converted to the dimensions required for the model and all of the following that apply: meteorological data; building, land use, and terrain data; receptor locations and population data; and other facility-specific parameters input into the model.

(4) Documentation of the fate and transport model outputs.

(5) Documentation of any exposure assessment and risk characterization calculations.

(6) Comparison of the HQ HI to the limit of 1.0.

9. When Do I Have to Complete and Submit My Health-Based Eligibility Demonstration?

(a) If you have an existing affected source, you must complete and submit your eligibility demonstration to your permitting authority, along with a signed certification that the demonstration is an accurate depiction of your facility, no later than the date one year prior to the compliance date of subpart DDDDD. A separate copy of the eligibility demonstration must be submitted to: U.S. EPA, Risk and Exposure Assessment Group, Emission Standards Division (C404– 01), Attn: Group Leader, Research Triangle Park, North Carolina 27711, electronic mail address *REAG@epa.gov*.

(b) If you have a new or reconstructed affected source that starts up before the effective date of subpart DDDDD, or an affected source that is an area source that increases its emissions or its potential to emit such that it becomes a major source of HAP before the effective date of subpart DDDDD, then you must comply with the requirements of subpart DDDDD until your eligibility demonstration is completed and submitted to your permitting authority.

(c) If you have a new or reconstructed affected source that starts up after the effective date of subpart DDDDD, or an affected source that is an area source that increases its emissions or its potential to emit such that it becomes a major source of HAP after the effective date for subpart DDDDD, then you must follow the schedule in paragraphs (c)(1) and (2) of this section.

(1) You must complete and submit a preliminary eligibility demonstration based on the information (*e.g.*, equipment types, estimated emission rates, etc.) used to obtain your title V permit. You must base your preliminary eligibility demonstration on the maximum emissions allowed under your title V permit. If the preliminary eligibility demonstration indicates that your affected source facility is eligible for either compliance alternative, then you may start up your new affected source and your new affected source will be considered in compliance with the alternative HCl standard and subject to the compliance requirements in this appendix or, in the case of manganese, your compliance demonstration with the TSM emission limit is based on 7 metals (excluding manganese).

(2) You must conduct the emission tests or fuel analysis specified in section 4 of this appendix upon initial startup and use the results of these emissions tests to complete and submit your eligibility demonstration within 180 days following your initial startup date. To be eligible, you must meet the criteria in section 11 of this appendix within 18 months following initial startup of your affected source.

10. When Do I Become Eligible for the Health-Based Compliance Alternatives?

To be eligible for either health-based compliance alternative, the parameters that defined your affected source as eligible for the health-based compliance alternatives (including, but not limited to, fuel type, fuel mix (annual average), type of control devices, process parameters reflecting the emissions rates used for your eligibility demonstration) must be submitted for incorporation as Federally enforceable limits into your title V permit. If you do not meet these criteria, then your affected source is subject to the applicable emission limits, operating limits, and work practice standards in Subpart DDDDD.

11. How Do I Ensure That My Facility Remains Eligible for the Health-Based Compliance Alternatives?

(a) You must update your eligibility demonstration and resubmit it each time you have a process change, such that any of the parameters that defined your affected source changes in a way that could result in increased HAP emissions (including, but not limited to, fuel type, fuel mix (annual average), change in type of control device, changes in process parameters documented as worst-case conditions during the emissions testing used for your approved eligibility demonstration).

(b) If you are updating your eligibility demonstration to account for an action in paragraph (a) of this section, then you must perform emission testing or fuel analysis according to section 4 of this appendix for the subpart DDDDD emission points that may have increased HAP emissions beyond the levels reflected in your previously approved eligibility demonstration due to the process change. You must submit your revised eligibility demonstration to the permitting authority prior to revising your permit to incorporate the process change. If your updated eligibility demonstration indicates that your affected source is no longer eligible for the health-based compliance alternatives, then you must comply with the applicable emission limits, operating limits, and compliance requirements in Subpart DDDDD prior to making the process change and revising your permit.

12. What Records Must I Keep?

You must keep records of the information used in developing the eligibility demonstration for your affected source, including all of the information specified in section 8 of this appendix.

13. Definitions

The definitions in §63.7575 of subpart DDDDD apply to this appendix. Additional definitions applicable for this appendix are as follows:

Hazard Index (HI) means the sum of more than one hazard quotient for multiple substances and/or multiple exposure pathways.

Hazard Quotient (HQ) means the ratio of the predicted media concentration of a pollutant to the media concentration at which no

adverse effects are expected. For inhalation exposures, the HQ is calculated as the air concentration divided by the RfC.

Look-up table analysis means a risk screening analysis based on comparing the HAP or HAP-equivalent emission rate from the affected source to the appropriate maximum allowable HAP or HAP-equivalent emission rates specified in Tables 2 and 3 of this appendix.

Reference Concentration (RfC) means an estimate (with uncertainty spanning perhaps an order of magnitude) of a continuous inhalation exposure to the human population (including sensitive subgroups) that is likely to be without an appreciable risk of deleterious effects during a lifetime. It can be derived from various types of human or animal data, with uncertainty factors generally applied to reflect limitations of the data used.

Worst-case operating conditions means operation of an affected unit during emissions testing under the conditions that result in the highest HAP emissions or that result in the emissions stream composition (including HAP and non-HAP) that is most challenging for the control device if a control device is used. For example, worst-case conditions could include operation of an affected unit firing solid fuel likely to produce the most HAP.

TABLE 1 TO APPENDIX B OF SUBPART DDDDD—EMISSION TEST METHODS

For ...	You must ...	Using ...
(1) Each subpart DDDDD emission point for which you choose to use a compliance alternative.	Select sampling ports' location and the number of traverse points.	Method 1 of 40 CFR part 60, appendix A.
(2) Each subpart DDDDD emission point for which you choose to use a compliance alternative.	Determine velocity and volumetric flow rate; ...	Method 2, 2F, or 2G in appendix A to 40 CFR part 60.
(3) Each subpart DDDDD emission point for which you choose to use a compliance alternative.	Conduct gas molecular weight analysis	Method 3A or 3B in appendix A to 40 CFR part 60.
(4) Each subpart DDDDD emission point for which you choose to use a compliance alternative.	Measure moisture content of the stack gas	Method 4 in appendix A to 40 CFR part 60.
(5) Each subpart DDDDD emission point for which you choose to use the HCl compliance alternative.	Measure the hydrogen chloride and chlorine emission concentrations.	Method 26 or 26A in appendix A to 40 CFR part 60.
(6) Each subpart DDDDD emission point for which you choose to use the TSM compliance alternative.	Measure the manganese emission concentration.	Method 29 in appendix A to 40 CFR part 60.
(7) Each subpart DDDDD emission point for which you choose to use a compliance alternative.	Convert emissions concentration to lb per MMBtu emission rates.	Method 19 F-factor methodology in appendix A to part 60 of this chapter.

TABLE 2 TO APPENDIX A OF SUBPART DDDDD—ALLOWABLE TOXICITY-WEIGHTED EMISSION RATE EXPRESSED IN HCl EQUIVALENTS (lbs/hr)

Stack ht.	Distance to property boundary (m)											
(m)	0	50	100	150	200	250	500	1000	1500	2000	3000	5000
5	114.9	114.9	114.9	114.9	114.9	114.9	144.3	287.3	373.0	373.0	373.0	373.0
10	188.5	188.5	188.5	188.5	188.5	188.5	195.3	328.0	432.5	432.5	432.5	432.5
20	386.1	386.1	386.1	386.1	386.1	386.1	386.1	425.4	580.0	602.7	602.7	602.7
30	396.1	396.1	396.1	396.1	396.1	396.1	396.1	436.3	596.2	690.6	807.8	816.5
40	408.1	408.1	408.1	408.1	408.1	408.1	408.1	448.2	613.3	715.5	832.2	966.0
50	421.4	421.4	421.4	421.4	421.4	421.4	421.4	460.6	631.0	746.3	858.2	1002.8
60	435.5	435.5	435.5	435.5	435.5	435.5	435.5	473.4	649.0	778.6	885.0	1043.4
70	450.2	450.2	450.2	450.2	450.2	450.2	450.2	486.6	667.4	813.8	912.4	1087.4
80	465.5	465.5	465.5	465.5	465.5	465.5	465.5	500.0	685.9	849.8	940.9	1134.8
100	497.5	497.5	497.5	497.5	497.5	497.5	497.5	527.4	723.6	917.1	1001.2	1241.3
200	677.3	677.3	677.3	677.3	677.3	677.3	677.3	682.3	919.8	1167.1	1390.4	1924.6

TABLE 3 TO APPENDIX A OF SUBPART DDDDD—ALLOWABLE MANGANESE EMISSION RATE (lbs/hr)

Stack ht.	Distance to property boundary (m)											
(m)	0	50	100	150	200	250	500	1000	1500	2000	3000	5000
5	0.29	0.29	0.29	0.29	0.29	0.29	0.36	0.72	0.93	0.93	0.93	0.94
10	0.47	0.47	0.47	0.47	0.47	0.47	0.49	0.82	1.08	1.08	1.08	1.08
20	0.97	0.97	0.97	0.97	0.97	0.97	0.97	1.06	1.45	1.51	1.51	1.51
30	0.99	0.99	0.99	0.99	0.99	0.99	0.99	1.09	1.49	1.72	2.02	2.04
40	1.02	1.02	1.02	1.02	1.02	1.02	1.02	1.12	1.53	1.79	2.08	2.42
50	1.05	1.05	1.05	1.05	1.05	1.05	1.05	1.15	1.58	1.87	2.15	2.51
60	1.09	1.09	1.09	1.09	1.09	1.09	1.09	1.18	1.62	1.95	2.21	2.61
70	1.13	1.13	1.13	1.13	1.13	1.13	1.13	1.22	1.67	2.03	2.28	2.72
80	1.16	1.16	1.16	1.16	1.16	1.16	1.16	1.25	1.71	2.12	2.35	2.84
100	1.24	1.24	1.24	1.24	1.24	1.24	1.24	1.32	1.81	2.29	2.50	3.10
200	1.69	1.69	1.69	1.69	1.69	1.69	1.69	1.71	2.30	2.92	3.48	4.81

[FR Doc. 04–11221 Filed 9–10–04; 8:45 am]

APPENDIX S (Modified July 24, 2006)

40 CFR 61 SUBPARTS A AND FF

§ 61.01 Lists of pollutants and applicability of part 61.

(a) The following list presents the substances that, pursuant to section 112 of the Act, have been designated as hazardous air pollutants. The Federal Register citations and dates refer to the publication in which the listing decision was originally published.

Asbestos (36 FR 5931; Mar. 31, 1971)

Benzene (42 FR 29332; June 8, 1977)

Beryllium (36 FR 5931; Mar. 31, 1971)

Coke Oven Emissions (49 FR 36560; Sept. 18, 1984)

Inorganic Arsenic (45 FR 37886; June 5, 1980)

Mercury (36 FR 5931; Mar. 31, 1971)

Radionuclides (44 FR 76738; Dec. 27, 1979)

Vinyl Chloride (40 FR 59532; Dec. 24, 1975)

(b) The following list presents other substances for which a Federal Register notice has been published that included consideration of the serious health effects, including cancer, from ambient air exposure to the substance.

Acrylonitrile (50 FR 24319; June 10, 1985)

1,3-Butadiene (50 FR 41466; Oct. 10, 1985)

Cadmium (50 FR 42000; Oct. 16, 1985)

Carbon Tetrachloride (50 FR 32621; Aug. 13, 1985)

Chlorinated Benzenes (50 FR 32628; Aug. 13, 1985)

Chlorofluorocarbon-113 (50 FR 24313; June 10, 1985)

Chloroform (50 FR 39626; Sept. 27, 1985)

Chloroprene (50 FR 39632; Sept. 27, 1985)

Chromium (50 FR 24317; June 10, 1985)

Copper (52 FR 5496; Feb. 23, 1987)

Epichlorohydrin (50 FR 24575; June 11, 1985)

Ethylene Dichloride (50 FR 41994; Oct. 16, 1985)

Ethylene Oxide (50 FR 40286; Oct. 2, 1985)

Hexachlorocyclopentadiene (50 FR 40154; Oct. 1, 1985)

Manganese (50 FR 32627; Aug. 13, 1985)

Methyl Chloroform (50 FR 24314; June 10, 1985)

Methylene Chloride (50 FR 42037; Oct. 17, 1985)

Nickel (51 FR 34135; Sept. 25, 1986)

Perchloroethylene (50 FR 52800; Dec. 26, 1985)

Phenol (51 FR 22854; June 23, 1986)

Polycyclic Organic Matter (49 FR 31680; Aug. 8, 1984)

Toluene (49 FR 22195; May 25, 1984)

Trichloroethylene (50 FR 52422; Dec. 23, 1985)

Vinylidene Chloride (50 FR 32632; Aug. 13, 1985)

Zinc and Zinc Oxide (52 FR 32597, Aug. 28, 1987)

(c) This part applies to the owner or operator of any stationary source for which a standard is prescribed under this part.

(d) In addition to complying with the provisions of this part, the owner or operator of a stationary source subject to a standard in this part may be required to obtain an operating permit issued to stationary sources by an authorized State air pollution control agency or by the Administrator of the U.S. Environmental Protection Agency (EPA) pursuant to title V of the Clean Air Act (Act) as amended November 15, 1990 (42 U.S.C. 7661). For more information about obtaining an operating permit see part 70 of this chapter.

[50 FR 46290, Nov. 7, 1985, as amended at 51 FR 7715 and 7719, Mar. 5, 1986; 51 FR 11022, Apr. 1, 1986; 52 FR 37617, Oct. 8, 1987; 59 FR 12429, Mar. 16, 1994]

§ 61.02 Definitions.

The terms used in this part are defined in the Act or in this section as follows:

Act means the Clean Air Act (42 U.S.C. 7401 et seq.).

Administrator means the Administrator of the Environmental Protection Agency or his authorized representative.

Alternative method means any method of sampling and analyzing for an air pollutant which is not a reference method but which has been demonstrated to the Administrator's satisfaction to produce results adequate for the Administrator's determination of compliance.

Approved permit program means a State permit program approved by the Administrator as meeting the requirements of part 70 of this chapter or a Federal permit program established in this chapter pursuant to title V of the Act (42 U.S.C. 7661).

Capital expenditure means an expenditure for a physical or operational change to a stationary source which exceeds the product of the applicable "annual asset guideline repair allowance percentage" specified in the latest edition of Internal Revenue Service (IRS) Publication 534 and the stationary source's basis, as defined by section 1012 of the Internal Revenue Code. However, the total expenditure for a physical or operational change to a stationary source must not be reduced by any "excluded additions" as defined for stationary sources constructed after December 31, 1981, in IRS Publication 534, as would be done for tax purposes. In addition, "annual asset guideline repair allowance" may be used even though it is excluded for tax purposes in IRS Publication 534.

Commenced means, with respect to the definition of "new source" in section 111(a)(2) of the Act, that an owner or operator has undertaken a continuous program of construction or modification or that an owner or operator has entered into a contractual obligation to undertake and complete, within a reasonable time, a continuous program of construction or modification.

Compliance schedule means the date or dates by which a source or category of sources is required to comply with the standards of this part and with any steps toward such compliance which are set forth in a waiver of compliance under §61.11.

Construction means fabrication, erection, or installation of an affected facility.

Effective date is the date of promulgation in the Federal Register of an applicable standard or other regulation under this part.

Existing source means any stationary source which is not a new source.

Issuance of a part 70 permit will occur, if the State is the permitting authority, in accordance with the requirements of part 70 of this chapter and the applicable, approved State permit program. When the EPA is the permitting authority, issuance of a title V permit occurs immediately after the EPA takes final action on the final permit.

Monitoring system means any system, required under the monitoring sections in applicable subparts, used to sample and condition (if applicable), to analyze, and to provide a record of emissions or process parameters.

New source means any stationary source, the construction or modification of which is commenced after the publication in the Federal Register of proposed national emission standards for hazardous air pollutants which will be applicable to such source.

Owner or operator means any person who owns, leases, operates, controls, or supervises a stationary source.

Part 70 permit means any permit issued, renewed, or revised pursuant to part 70 of this chapter.

Permit program means a comprehensive State operating permit system established pursuant to title V of the Act (42 U.S.C. 7661) and regulations codified in part 70 of this chapter and applicable State regulations, or a comprehensive Federal operating permit system established pursuant to title V of the Act and regulations codified in this chapter.

Permitting authority means:

(1) The State air pollution control agency, local agency, other State agency, or other agency authorized by the Administrator to carry out a permit program under part 70 of this chapter; or

(2) The Administrator, in the case of EPA-implemented permit programs under title V of the Act (42 U.S.C. 7661).

Reference method means any method of sampling and analyzing for an air pollutant, as described in Appendix B to this part.

Run means the net period of time during which an emission sample is collected. Unless otherwise specified, a run may be either

intermittent or continuous within the limits of good engineering practice.

Standard means a national emission standard including a design, equipment, work practice or operational standard for a hazardous air pollutant proposed or promulgated under this part.

Startup means the setting in operation of a stationary source for any purpose.

State means all non-Federal authorities, including local agencies, interstate associations, and State-wide programs, that have delegated authority to implement:

(1) The provisions of this part; and/or

(2) The permit program established under part 70 of this chapter. The term State shall have its conventional meaning where clear from the context.

Stationary source means any building, structure, facility, or installation which emits or may emit any air pollutant which has been designated as hazardous by the Administrator.

Title V permit means any permit issued, renewed, or revised pursuant to Federal or State regulations established to implement title V of the Act (42 U.S.C. 7661). A title V permit issued by a State permitting authority is called a part 70 permit in this part.

[44 FR 55174, Sept. 25, 1979, as amended at 50 FR 46290, Nov. 7, 1985; 59 FR 12429, Mar. 16, 1994]

§ 61.03 Units and abbreviations.

Used in this part are abbreviations and symbols of units of measure. These are defined as follows:

(a) System International (SI) units of measure:

A=ampere

g=gram

Hz=hertz

J=joule

K=degree Kelvin

kg=kilogram

m=meter

m^2=square meter

m^3=cubic meter

mg=milligram=10^{-3} gram

mm=millimeter=10^{-3} meter

Mg=megagram=10^{-6} gram

mol=mole

N=newton

ng=nanogram=10^{-9} gram

nm=nanometer=10^{-9} meter

Pa=pascal

s=second

V=volt

W=watt

V=ohm

μg=microgram=10^{6} gram

(b) Other units of measure:

°C=degree Celsius (centigrade)

cfm=cubic feet per minute

cc=cubic centimeter

Ci=curie

d=day

°F=degree Fahrenheit

ft^2=square feet

ft^3=cubic feet

gal=gallon

in=inch

in Hg=inches of mercury

in H_2O=inches of water

l=liter

lb=pound

lpm=liter per minute

min=minute

ml=milliliter=10^{-3} liter

mrem=millirem=10^{-3} rem

oz=ounces

pCi=picocurie=10^{-12} curie

psig=pounds per square inch gage

°R=degree Rankine

μl=microliter=10^{6} liter

v/v=volume per volume

yd^2=square yards

yr=year

(c) Chemical nomenclature:

Be=beryllium

Hg=mercury

H_2O=water

(d) Miscellaneous:

act=actual

avg=average

I.D.=inside diameter

M=molar

N=normal

O.D.=outside diameter

%=percent

std=standard

[42 FR 51574, Sept. 29, 1977, as amended at 54 FR 51704, Dec. 15, 1989]

§ 61.04 Address.

(a) All requests, reports, applications, submittals, and other communications to the Administrator pursuant to this part shall be submitted in duplicate to the appropriate Regional Office of the U.S. Environmental Protection Agency to the attention of the Director of the Division indicated in the following list of EPA Regional Offices.

Region I (Connecticut, Maine, Massachusetts, New Hampshire, Rhode Island, Vermont), Director, Air Management Division, U.S. Environmental Protection Agency, John F. Kennedy Federal Building, Boston, MA 02203.

Region II (New Jersey, New York, Puerto Rico, Virgin Islands), Director, Air and Waste Management Division, U.S. Environmental Protection Agency, Federal Office Building, 26 Federal Plaza (Foley Square), New York, NY 10278.

Region III (Delaware, District of Columbia, Maryland, Pennsylvania, Virginia, West Virginia), Director, Air and Waste Management Division, U.S. Environmental Protection Agency, Curtis Building, Sixth and Walnut Streets, Philadelphia, PA 19106.

Region IV (Alabama, Florida, Georgia, Kentucky, Mississippi, North Carolina, South Carolina, Tennessee), Director, Air and Waste Management Division, U.S. Environmental Protection Agency, 345 Courtland Street, NE., Atlanta, GA 30365.

Region V (Illinois, Indiana, Michigan, Minnesota, Ohio, Wisconsin), Director, Air and Radiation Division, U.S. Environmental Protection Agency, 77 West Jackson Boulevard, Chicago, IL 60604-3590.

Region VI (Arkansas, Louisiana, New Mexico, Oklahoma, Texas); Director; Air, Pesticides, and Toxics Division; U.S. Environmental Protection Agency, 1445 Ross Avenue, Dallas, TX 75202.

Region VII (Iowa, Kansas, Missouri, Nebraska), Director, Air, RCRA, and Toxics Division, U.S. Environmental Protection Agency, 901 N. 5th Street, Kansas City, KS 66101.

Region VIII (Colorado, Montana, North Dakota, South Dakota, Utah, Wyoming), Assistant Regional Administrator, Office of Enforcement, Compliance and Environmental Justice, 999 18th Street, Suite 300, Denver, CO 80202-2466.

Region IX (American Samoa, Arizona, California, Guam, Hawaii, Nevada), Director, Air Division, U.S. Environmental Protection Agency, 75 Hawthorne Street, San Francisco, CA 94105.

Region X (Alaska, Oregon, Idaho, Washington), Director, Office of Air Quality, U.S. Environmental Protection Agency, 1200 Sixth Avenue (OAQ-107), Seattle, WA 98101.

(b) Section 112(d) directs the Administrator to delegate to each State, when appropriate, the authority to implement and enforce national emission standards for hazardous air pollutants for stationary sources located in such State. If the authority to implement and enforce a standard under this part has been delegated to a State, all information required to be submitted to EPA under paragraph (a) of this section shall also be submitted to the appropriate State agency (provided, that each specific delegation may exempt sources from a certain Federal or State reporting requirement). The Administrator may permit all or some of the information to be submitted to the appropriate State agency only, instead of to EPA and the State agency. If acceptable to both the Administrator and the owner or operator of a source, notifications and reports may be submitted on electronic media. The appropriate mailing address for those States whose delegation request has been approved is as follows:

(A) - (YY) *not included in this document as they do not pertain to sources in Wyoming.*

(ZZ) State of Wyoming, Air Quality Division, Department of Environmental Quality, 122 W. 25th Street, Cheyenne, WY 82002.

(AAA) - (EEE) *not included in this document as they do not pertain to sources in Wyoming.*

(c) The following tables list, by Region, the specific Part 61, National Emission Standards for Hazardous Air Pollutants that have been delegated to state and local agencies.

(1) - (7) *not included in this document as they do not pertain to sources in Wyoming.*

(8) The following is a table indicating the delegation status of National Emission Standards for Hazardous Air Pollutants in Region VIII.

Region VIII--Delegation Status of National Emission Standards for Hazardous Air Pollutants[1]

Subpart	CO	MT	ND	SD	UT[2]	WY
A--General Provisions	(*)	(*)	(*)	(*)	(*)	
B--Radon Emissions from Underground Uranium Mines					(*)	
C--Beryllium	(*)	(*)	(*)		(*)	
D--Beryllium Rocket Motor Firing	(*)	(*)	(*)		(*)	
E--Mercury	(*)	(*)	(*)		(*)	
F--Vinyl Chloride	(*)	(*)	(*)		(*)	
H--Emissions of Radionuclides other than Radon from Department of Energy Facilities						
I--Radionuclide Emissions from Facilities Licensed by the Nuclear Regulatory Commission and Federal Facilities not covered by Subpart H						
J--Equipment Leaks (Fugitive Emission Sources) of Benzene	(*)	(*)	(*)		(*)	
K--Radionuclide Emissions from Elemental Phosphorus Plants						
L--Benzene Emissions from Coke By-Product Recovery Plants		(*)	(*)		(*)	
M--Asbestos	(*)	(*)	(*)	(*)	(*)	[3](*)
N--Inorganic Arsenic Emissions from Glass Manufacturing Plants		(*)	(*)		(*)	
O--Inorganic Arsenic Emissions from Primary Copper Smelters		(*)	(*)		(*)	
P--Inorganic Arsenic Emissions from Arsenic Trioxide and Metallic Arsenic Production Facilities		(*)	(*)		(*)	
Q--Radon Emissions from Department of Energy Facilities					(*)	
R--Radon Emission from Phosphogypsum Stacks					(*)	
T--Radon Emissions from the Disposal of Uranium Mill Tailings					(*)	
V--Equipment Leaks (Fugitive Emission Sources)		(*)	(*)		(*)	
W--Radon Emissions from Operating Mill Tailings					(*)	
Y--Benzene Emissions from Benzene Storage Vessels		(*)	(*)		(*)	
BB--Benzene Emission from Benzene Transfer Operations		(*)	(*)		(*)	
FF--Benzene Waste Operations		(*)	(*)		(*)	

(*)Indicates approval of delegation of subpart to state.

[1]Authorities which may not be delegated include 40 CFR 61.04(b), 61.12(d)(1), 61.13(h)(1)(i), 61.112(c), 61.164(a)(2), 61.164(a)(3), 61.172(b)(2)(ii)(B), 61.172(b)(2)(ii)(C), 61.174(a)(2), 61.174(a)(3), 61.242 - 1(c)(2), 61.244, and all authorities listed as not delegable in each subpart under Delegation of Authority.

[2]Indicates approval of National Emission Standards for Hazardous Air Pollutants as part of the State Implementation Plan (SIP) with the exception of the radionuclide NESHAP Subparts B, Q, R, T, W which were approved through Section 112(l) of the Clean Air Act.

[3]Delegation only for asbestos demolition, renovation, spraying, manufacturing, and fabricating operations, insulating materials, waste disposal for demolition, renovation, spraying, manufacturing and fabricating operations, inactive waste disposal sites for manufacturing and fabricating operations, and operations that convert asbestos-containing waste material into nonasbestos (asbestos-free) material.

(9) - (10) *not included in this document as they do not pertain to sources in Wyoming.*

[40 FR 18170, Apr. 25, 1975]

Editorial Note: For Federal Register citations to §61.04 see the List of CFR Sections Affected appearing in the Finding Aids section of the printed volume and on GPO access.

§ 61.05 Prohibited activities.

(a) After the effective date of any standard, no owner or operator shall construct or modify any stationary source subject to that standard without first obtaining written approval from the Administrator in accordance with this subpart, except under an exemption granted by the President under section 112(c)(2) of the Act. Sources, the construction or modification of which commenced after the publication date of the standards proposed to be applicable to the sources, are subject to this prohibition.

(b) After the effective date of any standard, no owner or operator shall operate a new stationary source subject to that standard in violation of the standard, except under an exemption granted by the President under section 112(c)(2) of the Act.

(c) Ninety days after the effective date of any standard, no owner or operator shall operate any existing source subject to that standard in violation of the standard, except under a waiver granted by the Administrator under this part or under an exemption granted by the President under section 112(c)(2) of the Act.

(d) No owner or operator subject to the provisions of this part shall fail to report, revise reports, or report source test results as required under this part.

[38 FR 8826, Apr. 6, 1973, as amended at 50 FR 46291, Nov. 7, 1985]

§ 61.06 Determination of construction or modification.

An owner or operator may submit to the Administrator a written application for a determination of whether actions intended to be taken by the owner or operator constitute construction or modification, or commencement thereof, of a source subject to

a standard. The Administrator will notify the owner or operator of his determination within 30 days after receiving sufficient information to evaluate the application.

[50 FR 46291, Nov. 7, 1985]

§ 61.07 Application for approval of construction or modification.

(a) The owner or operator shall submit to the Administrator an application for approval of the construction of any new source or modification of any existing source. The application shall be submitted before the construction or modification is planned to commence, or within 30 days after the effective date if the construction or modification had commenced before the effective date and initial startup has not occurred. A separate application shall be submitted for each stationary source.

(b) Each application for approval of construction shall include-

(1) The name and address of the applicant;

(2) The location or proposed location of the source; and

(3) Technical information describing the proposed nature, size, design, operating design capacity, and method of operation of the source, including a description of any equipment to be used for control of emissions. Such technical information shall include calculations of emission estimates in sufficient detail to permit assessment of the validity of the calculations.

(c) Each application for approval of modification shall include, in addition to the information required in paragraph (b) of this section-

(1) The precise nature of the proposed changes;

(2) The productive capacity of the source before and after the changes are completed; and

(3) Calculations of estimates of emissions before and after the changes are completed, in sufficient detail to permit assessment of the validity of the calculations.

[50 FR 46291, Nov. 7, 1985]

§ 61.08 Approval of construction or modification.

(a) The Administrator will notify the owner or operator of approval or intention to deny approval of construction or modification within 60 days after receipt of sufficient information to evaluate an application under §61.07.

(b) If the Administrator determines that a stationary source for which an application under §61.07 was submitted will not cause emissions in violation of a standard if properly operated, the Administrator will approve the construction or modification.

(c) Before denying any application for approval of construction or modification, the Administrator will notify the applicant of the Administrator's intention to issue the denial together with-

(1) Notice of the information and findings on which the intended denial is based; and

(2) Notice of opportunity for the applicant to present, within such time limit as the Administrator shall specify, additional information or arguments to the Administrator before final action on the application.

(d) A final determination to deny any application for approval will be in writing and will specify the grounds on which the denial is based. The final determination will be made within 60 days of presentation of additional information or arguments, or 60 days after the final date specified for presentation if no presentation is made.

(e) Neither the submission of an application for approval nor the Administrator's approval of construction or modification shall-

(1) Relieve an owner or operator of legal responsibility for compliance with any applicable provisions of this part or of any other applicable Federal, State, or local requirement; or

(2) Prevent the Administrator from implementing or enforcing this part or taking any other action under the Act.

[50 FR 46291, Nov. 7, 1985]

§ 61.09 Notification of startup.

(a) The owner or operator of each stationary source which has an initial startup after the effective date of a standard shall furnish the Administrator with written notification as follows:

(1) A notification of the anticipated date of initial startup of the source not more than 60 days nor less than 30 days before that date.

(2) A notification of the actual date of initial startup of the source within 15 days after that date.

(b) If any State or local agency requires a notice which contains all the information required in the notification in paragraph (a) of this section, sending the Administrator a copy of that notification will satisfy paragraph (a) of this section.

[50 FR 46291, Nov. 7, 1985]

§ 61.10 Source reporting and waiver request.

(a) The owner or operator of each existing source or each new source which had an initial startup before the effective date shall provide the following information in writing to the Administrator within 90 days after the effective date:

(1) Name and address of the owner or operator.

(2) The location of the source.

(3) The type of hazardous pollutants emitted by the stationary source.

(4) A brief description of the nature, size, design, and method of operation of the stationary source including the operating design capacity of the source. Identify each point of emission for each hazardous pollutant.

(5) The average weight per month of the hazardous materials being processed by the source, over the last 12 months preceding the date of the report.

(6) A description of the existing control equipment for each emission point including

(i) Each control device for each hazardous pollutant; and

(ii) Estimated control efficiency (percent) for each control device.

(7) A statement by the owner or operator of the source as to whether the source can comply with the standards within 90 days after the effective date.

(b) The owner or operator of an existing source unable to comply with an applicable standard may request a waiver of compliance with that standard for a period not exceeding 2 years after the effective date. Any request shall be in writing and shall include the following information:

(1) A description of the controls to be installed to comply with the standard.

(2) A compliance schedule, including the date each step toward compliance will be reached. The list shall include as a minimum the following dates:

(i) Date by which contracts for emission control systems or process changes for emission control will be awarded, or date by which orders will be issued for the purchase of component parts to accomplish emission control or process changes;

(ii) Date of initiation of onsite construction or installation of emission control equipment or process change;

(iii) Date by which onsite construction or installation of emission control equipment or process change is to be completed; and

(iv) Date by which final compliance is to be achieved.

(3) A description of interim emission control steps which will be taken during the waiver period.

(c) Any change in the information provided under paragraph (a) of this section or §§61.07(b) shall be provided to the Administrator within 30 days after the change. However, if any change will result from modification of the source, §§61.07(c) and 61.08 apply.

(d) A possible format for reporting under this section is included as appendix A of this part. Advice on reporting the status of compliance may be obtained from the Administrator.

(e) For the purposes of this part, time periods specified in days shall be measured in calendar days, even if the word ``calendar" is absent, unless otherwise specified in an applicable requirement.

(f) For the purposes of this part, if an explicit postmark deadline is not specified in an applicable requirement for the submittal of a notification, application, report, or other written communication to the Administrator, the owner or operator shall postmark the submittal on or before the number of days

specified in the applicable requirement. For example, if a notification must be submitted 15 days before a particular event is scheduled to take place, the notification shall be postmarked on or before 15 days preceding the event; likewise, if a notification must be submitted 15 days after a particular event takes place, the notification shall be postmarked on or before 15 days following the end of the event. The use of reliable non-Government mail carriers that provide indications of verifiable delivery of information required to be submitted to the Administrator, similar to the postmark provided by the U.S. Postal Service, or alternative means of delivery agreed to by the permitting authority, is acceptable.

(g) Notwithstanding time periods or postmark deadlines specified in this part for the submittal of information to the Administrator by an owner or operator, or the review of such information by the Administrator, such time periods, or deadlines may be changed by mutual agreement between the owner or operator and the Administrator. Procedures governing the implementation of this provision are specified in paragraph (j) of this section.

(h) If an owner or operator of a stationary source in a State with delegated authority is required to submit reports under this part to the State, and if the State has an established timeline for the submission of reports that is consistent with the reporting frequency(ies) specified for such source under this part, the owner or operator may change the dates by which reports under this part shall be submitted (without changing the frequency of reporting) to be consistent with the State's schedule by mutual agreement between the owner or operator and the State. The allowance in the previous sentence applies in each State beginning 1 year after the source is required to be in compliance with the applicable subpart in this part. Procedures governing the implementation of this provision are specified in paragraph (j) of this section.

(i) If an owner or operator supervises one or more stationary sources affected by standards set under this part and standards set under part 60, part 63, or both such parts of this chapter, he/she may arrange by mutual agreement between the owner or operator and the Administrator (or the State with an approved permit program) a common schedule on which reports required by each applicable standard shall be submitted throughout the year. The allowance in the previous sentence applies in each State beginning 1 year after the source is required to be in compliance with the applicable subpart in this part, or 1 year after the source is required to be in compliance with the applicable part 60 or part 63 standard, whichever is latest. Procedures governing the implementation of this provision are specified in paragraph (j) of this section.

(j) (1)(i) Until an adjustment of a time period or postmark deadline has been approved by the Administrator under paragraphs (j)(2) and (j)(3) of this section, the owner or operator of an affected source remains strictly subject to the requirements of this part.

(ii) An owner or operator shall request the adjustment provided for in paragraphs (j)(2) and (j)(3) of this section each time he or she wishes to change an applicable time period or postmark deadline specified in this part.

(2) Notwithstanding time periods or postmark deadlines specified in this part for the submittal of information to the Administrator by an owner or operator, or the review of such information by the Administrator, such time periods or deadlines may be changed by mutual agreement between the owner or operator and the Administrator. An owner or operator who wishes to request a change in a time period or postmark deadline for a particular requirement shall request the adjustment in writing as soon as practicable before the subject activity is required to take place. The owner or operator shall include in the request whatever information he or she considers useful to convince the Administrator that an adjustment is warranted.

(3) If, in the Administrator's judgment, an owner or operator's request for an adjustment to a particular time period or postmark deadline is warranted, the Administrator will approve the adjustment. The Administrator will notify the owner or operator in writing of approval or disapproval of the request for an adjustment within 15 calendar days of receiving sufficient information to evaluate the request.

(4) If the Administrator is unable to meet a specified deadline, he or she will notify the owner or operator of any significant delay and inform the owner or operator of the amended schedule.

[38 FR 8826, Apr. 6, 1973, as amended at 50 FR 46292, Nov. 7, 1985; 59 FR 12430, Mar. 16, 1994]

§ 61.11 Waiver of compliance.

(a) Based on the information provided in any request under §61.10, or other information, the Administrator may grant a waiver of compliance with a standard for a period not exceeding 2 years after the effective date of the standard.

(b) The waiver will be in writing and will-

(1) Identify the stationary source covered;

(2) Specify the termination date of the waiver;

(3) Specify dates by which steps toward compliance are to be taken; and

(4) Specify any additional conditions which the Administrator determines necessary to assure installation of the necessary controls within the waiver period and to assure protection of the health of persons during the waiver period.

(c) The Administrator may terminate the waiver at an earlier date than specified if any specification under paragraphs (b)(3) and (b)(4) of this section are not met.

(d) Before denying any request for a waiver, the Administrator will notify the owner or operator making the request of the Administrator's intention to issue the denial, together with-

(1) Notice of the information and findings on which the intended denial is based; and

(2) Notice of opportunity for the owner or operator to present, within the time limit the Administrator specifies, additional information or arguments to the Administrator before final action on the request.

(e) A final determination to deny any request for a waiver will be in writing and will set forth the specific grounds on which the denial is based. The final determination will be made within 60 days after presentation of additional information or argument; or within 60 days after the final date specified for the presentation if no presentation is made.

(f) The granting of a waiver under this section shall not abrogate the Administrator's authority under section 114 of the Act.

[50 FR 46292, Nov. 7, 1985]

§ 61.12 Compliance with standards and maintenance requirements.

(a) Compliance with numerical emission limits shall be determined in accordance with emission tests established in §61.13 or as otherwise specified in an individual subpart.

(b) Compliance with design, equipment, work practice or operational standards shall be determined as specified in an individual subpart.

(c) The owner or operator of each stationary source shall maintain and operate the source, including associated equipment for air pollution control, in a manner consistent with good air pollution control practice for minimizing emissions. Determination of whether acceptable operating and maintenance procedures are being used will be based on information available to the Administrator which may include, but is not limited to, monitoring results, review of operating and maintenance procedures, and inspection of the source.

(d)(1) If, in the Administrator's judgment, an alternative means of emission limitation will achieve a reduction in emissions of a pollutant from a source at least equivalent to the reduction in emissions of that pollutant from that source achieved under any design, equipment, work practice or operational standard, the Administrator will publish in the Federal Register a notice permitting the use of the alternative means for purposes of compliance with the standard. The notice will restrict the permission to the source(s) or category(ies) of sources on which the alternative means will achieve equivalent emission reductions. The notice may condition permission on requirements related to the operation and maintenance of the alternative means.

(2) Any notice under paragraph (d)(1) shall be published only after notice and an opportunity for a hearing.

(3) Any person seeking permission under this

subsection shall, unless otherwise specified in the applicable subpart, submit a proposed test plan or the results of testing and monitoring, a description of the procedures followed in testing or monitoring, and a description of pertinent conditions during testing or monitoring.

(e) For the purpose of submitting compliance certifications or establishing whether or not a person has violated or is in violation of any standard in this part, nothing in this part shall preclude the use, including the exclusive use, of any credible evidence or information, relevant to whether a source would have been in compliance with applicable requirements if the appropriate performance or compliance test had been performed.

[50 FR 46292, Nov. 7, 1985, as amended 62 FR 8328, Feb. 24, 1997]

§ 61.13 Emission tests and waiver of emission tests.

(a) If required to do emission testing by an applicable subpart and unless a waiver of emission testing is obtained under this section, the owner or operator shall test emissions from the source-

(1) Within 90 days after the effective date, for an existing source or a new source which has an initial startup date before the effective date; or

(2) Within 90 days after initial startup, for a new source which has an initial startup date after the effective date.

(b) The Administrator may require an owner or operator to test emissions from the source at any other time when the action is authorized by section 114 of the Act.

(c) The owner or operator shall notify the Administrator of the emission test at least 30 days before the emission test to allow the Administrator the opportunity to have an observer present during the test.

(d) If required to do emission testing, the owner or operator of each new source and, at the request of the Administrator, the owner or operator of each existing source shall provide emission testing facilities as follows:

(1) Sampling ports adequate for test methods applicable to each source.

(2) Safe sampling platform(s).

(3) Safe access to sampling platform(s).

(4) Utilities for sampling and testing equipment.

(5) Any other facilities that the Administrator needs to safely and properly test a source.

(e) Each emission test shall be conducted under such conditions as the Administrator shall specify based on design and operational characteristics of the source.

(f) Unless otherwise specified in an applicable subpart, samples shall be analyzed and emissions determined within 30 days after each emission test has been completed. The owner or operator shall report the determinations of the emission test to the Administrator by a registered letter sent before the close of business on the 31st day following the completion of the emission test.

(g) The owner or operator shall retain at the source and make available, upon request, for inspection by the Administrator, for a minimum of 2 years, records of emission test results and other data needed to determine emissions.

(h)(1) Emission tests shall be conducted as set forth in this section, the applicable subpart and appendix B unless the Administrator-

(i) Specifies or approves the use of a reference method with minor changes in methodology; or

(ii) Approves the use of an alternative method; or

(iii) Waives the requirement for emission testing because the owner or operator of a source has demonstrated by other means to the Administrator's satisfaction that the source is in compliance with the standard.

(2) If the Administrator finds reasonable grounds to dispute the results obtained by an alternative method, he may require the use of a reference method. If the results of the reference and alternative methods do not agree, the results obtained by the reference method prevail.

(3) The owner or operator may request approval for the use of an alternative method at any time, except

(i) For an existing source or a new source that had an initial startup before the effective date, any request for use of an alternative method during the initial emission test shall be submitted to the Administrator within 30 days after the effective date, or with the request for a waiver of compliance if one is submitted under §60.10(b); or

(ii) For a new source that has an initial startup after the effective date, any request for use of an alternative method during the initial emission test shall be submitted to the Administrator no later than with the notification of anticipated startup required under §60.09.

(i)(1) Emission tests may be waived upon written application to the Administrator if, in the Administrator's judgment, the source is meeting the standard, or the source is being operated under a waiver or compliance, or the owner or operator has requested a waiver of compliance and the Administrator is still considering that request.

(2) If application for waiver of the emission test is made, the application shall accompany the information required by §61.10 or the notification of startup required by §61.09, whichever is applicable. A possible format is contained in appendix A to this part.

(3) Approval of any waiver granted under this section shall not abrogate the Administrator's authority under the Act or in any way prohibit the Administrator from later canceling the waiver. The cancellation will be made only after notice is given to the owner or operator of the source.

[50 FR 46292, Nov. 7, 1985]

§ 61.14 Monitoring requirements.

(a) Unless otherwise specified, this section applies to each monitoring system required under each subpart which requires monitoring.

(b) Each owner or operator shall maintain and operate each monitoring system as specified in the applicable subpart and in a manner consistent with good air pollution control practice for minimizing emissions. Any unavoidable breakdown or malfunction of the monitoring system should be repaired or adjusted as soon as practicable after its occurrence. The Administrator's determination of whether acceptable operating and maintenance procedures are being used will be based on information which may include, but not be limited to, review of operating and maintenance procedures, manufacturer recommendations and specifications, and inspection of the monitoring system.

(c) When required by the applicable subpart, and at any other time the Administrator may require, the owner or operator of a source being monitored shall conduct a performance evaluation of the monitoring system and furnish the Administrator with a copy of a written report of the results within 60 days of the evaluation. Such a performance evaluation shall be conducted according to the applicable specifications and procedures described in the applicable subpart. The owner or operator of the source shall furnish the Administrator with written notification of the date of the performance evaluation at least 30 days before the evaluation is to begin.

(d) When the effluents from a single source, or from two or more sources subject to the same emission standards, are combined before being released to the atmosphere, the owner or operator shall install a monitoring system on each effluent or on the combined effluent. If two or more sources are not subject to the same emission standards, the owner or operator shall install a separate monitoring system on each effluent, unless otherwise specified. If the applicable standard is a mass emission standard and the effluent from one source is released to the atmosphere through more than one point, the owner or operator shall install a monitoring system at each emission point unless the installation of fewer systems is approved by the Administrator.

(e) The owner or operator of each monitoring system shall reduce the monitoring data as specified in each applicable subpart. Monitoring data recorded during periods of unavoidable monitoring system breakdowns, repairs, calibration checks, and zero and span adjustments shall not be included in any data average.

(f) The owner or operator shall maintain records of monitoring data, monitoring system calibration checks, and the occurrence and duration of any period during which the monitoring system is malfunctioning or inoperative. These records shall be maintained

at the source for a minimum of 2 years and made available, upon request, for inspection by the Administrator.

(g)(1) Monitoring shall be conducted as set forth in this section and the applicable subpart unless the Administrator-

(i) Specifies or approves the use of the specified monitoring requirements and procedures with minor changes in methodology; or

(ii) Approves the use of alternatives to any monitoring requirements or procedures.

(2) If the Administrator finds reasonable grounds to dispute the results obtained by an alternative monitoring method, the Administrator may require the monitoring requirements and procedures specified in this part.

[50 FR 46293, Nov. 7, 1985]

§ 61.15 Modification.

(a) Except as provided under paragraph (d) of this section, any physical or operational change to a stationary source which results in an increase in the rate of emission to the atmosphere of a hazardous pollutant to which a standard applies shall be considered a modification.

(b) Upon modification, an existing source shall become a new source for each hazardous pollutant for which the rate of emission to the atmosphere increases and to which a standard applies.

(c) Emission rate shall be expressed as kg/hr of any hazardous pollutant discharged into the atmosphere for which a standard is applicable. The Administrator shall use the following to determine the emission rate:

(1) Emission factors as specified in the background information document (BID) for the applicable standard, or in the latest issue of "Compilation of Air Pollutant Emission Factors," EPA Publication No. AP-42, or other emission factors determined by the Administrator to be superior to AP-42 emission factors, in cases where use of emission factors demonstrates that the emission rate will clearly increase or clearly not increase as a result of the physical or operational change.

(2) Material balances, monitoring data, or manual emission tests in cases where use of emission factors, as referenced in paragraph (c)(1) of this section, does not demonstrate to the Administrator's satisfaction that the emission rate will clearly increase or clearly not increase as a result of the physical or operational change, or where an interested person demonstrates to the Administrator's satisfaction that there are reasonable grounds to dispute the result obtained by the Administrator using emission factors. When the emission rate is based on results from manual emission tests or monitoring data, the procedures specified in appendix C of 40 CFR part 60 shall be used to determine whether an increase in emission rate has occurred. Tests shall be conducted under such conditions as the Administrator shall specify to the owner or operator. At least three test runs must be conducted before and at least three after the physical or operational change. If the Administrator approves, the results of the emission tests required in §§61.13(a) may be used for the test runs to be conducted before the physical or operational change. All operating parameters which may affect emissions must be held constant to the maximum degree feasible for all test runs.

(d) The following shall not, by themselves, be considered modifications under this part:

(1) Maintenance, repair, and replacement which the Administrator determines to be routine for a source category.

(2) An increase in production rate of a stationary source, if that increase can be accomplished without a capital expenditure on the stationary source.

(3) An increase in the hours of operation.

(4) Any conversion to coal that meets the requirements specified in section 111(a)(8) of the Act.

(5) The relocation or change in ownership of a stationary source. However, such activities must be reported in accordance with §§61.10(c).

[50 FR 46294, Nov. 7, 1985]

§ 61.16 Availability of information.

The availability to the public of information provided to, or otherwise obtained by, the Administrator under this part shall be governed by part 2 of this chapter.

[38 FR 8826, Apr. 6, 1973. Redesignated at 50 FR 46294, Nov. 7, 1985]

§ 61.17 State authority.

(a) This part shall not be construed to preclude any State or political subdivision thereof from-

(1) Adopting and enforcing any emission limiting regulation applicable to a stationary source, provided that such emission limiting regulation is not less stringent than the standards prescribed under this part; or

(2) Requiring the owner or operator of a stationary source to obtain permits, licenses, or approvals prior to initiating construction, modification, or operation of the source.

[50 FR 46294, Nov. 7, 1985]

§ 61.18 Incorporations by reference.

The materials listed below are incorporated by reference in the corresponding sections noted. These incorporations by reference were approved by the Director of the Federal Register in accordance with 5 U.S.C. 552(a) and 1 CFR part 51. These materials are incorporated as they exist on the date of the approval, and a notice of any change in these materials will be published in the Federal Register. The materials are available for inspection at the corresponding address noted below, and at U.S. EPA's Air Docket at 1200 Pennsylvania Avenue, NW, Washington, DC 20460, or at the National Archives and Records Administration (NARA). For information on the availability of this material at NARA, call 202-741-6030, or go to: http://www.archives.gov/federal_register/code_of_federal_regulations/ibr_locations.html.

(a) The following materials are available for purchase from at least one of the following addresses: American Society for Testing and Materials (ASTM) International, 100 Barr Harbor Drive, P.O. Box C700, West Conshohocken, PA, 19428-2959; or University Microfilms International, 300 North Zeeb Road, Ann Arbor, MI 48106.

(1) ASTM D737-75, Standard Test Method for Air Permeability of Textile Fabrics, incorporation by reference (IBR) approved January 27, 1983 for Sec. 61.23(a).

(2) ASTM D835-85, Standard Specification for Refined Benzene-485, IBR approved September 14, 1989 for Sec. 61.270(a).

(3) ASTM D836-84, Standard Specification for Industrial Grade Benzene, IBR approved September 14, 1989 for Sec. 61.270(a).

(4) ASTM D1193-77, 91, Standard Specification for Reagent Water, IBR approved for appendix B: Method 101, Section 7.1.1; Method 101A, Section 7.1.1; and Method 104, Section 7.1; Method 108, Section 7.1.3; Method 108A, Section 7.1.1; Method 108B, Section 7.1.1; Method 108C, Section 7.1.1; and Method 111, Section 7.3.

(5) ASTM D2267-68, 78, 88, Standard Test Method for Aromatics in Light Naphthas and Aviation Gasoline by Gas Chromatography, IBR approved September 30, 1986, for Sec. 61.67(h)(1).

(6) ASTM D2359-85a, 93, Standard Specification for Refined Benzene- 535, IBR approved September 14, 1989 for Sec. 61.270(a).

(7) ASTM D2382-76, 88, Heat of Combustion of Hydrocarbon Fuels by Bomb Calorimeter (High-Precision Method), IBR approved June 6, 1984 for Sec. 61.245(e)(3).

(8) ASTM D2504-67, 77, 88 (Reapproved 1993), Noncondensable Gases in C3 and Lighter Hydrocarbon Products by Gas Chromatography, IBR approved June 6, 1984 for Sec. 61.245(e)(3).

(9) ASTM D2879-83, Standard Test Method for Vapor Pressure-- Temperature Relationship and Initial Decomposition Temperature of Liquids by Isoteniscope, IBR approved December 14, 2000 for Sec. 61.241.

(10) ASTM D2986-71, 78, 95a, Standard Method for Evaluation of Air, Assay Media by the Monodisperse DOP (Dioctyl Phthalate) Smoke Test, IBR approved for appendix B: Method 103, Section 6.1.3.

(11) ASTM D4420-94, Standard Test Method for Determination of Aromatics in Finished Gasoline by Gas Chromatography, IBR approved for Sec. 61.67(h)(1).

(12) ASTM D4734-87, 96, Standard Specification for Refined Benzene- 545, IBR approved September 14, 1989 for Sec. 61.270(a).

(13) ASTM D4809-95, Standard Test Method

for Heat of Combustion of Liquid Hydrocarbon Fuels by Bomb Calorimeter (Precision Method), IBR approved for Sec. 61.245(e)(3).

(14) ASTM E50-82, 86, 90 (Reapproved 1995), Standard Practices for Apparatus Reagents, and Safety Precautions for Chemical Analysis of Metals, IBR approved for appendix B: Method 108C, Section 6.1.4.

(b) The following material is available from the U.S. EPA Environmental Monitoring and Support Laboratory, Cincinnati, Ohio 45268.

(1) Method 601, Test Method for Purgeable Halocarbons, July 1982, IBR approved September 30, 1986, for Sec. 61.67(g)(2).

(c) The following material is available for purchase from the American National Standards Institute, 25 West 43rd Street, 4th Floor, New York, New York 10036.

(1) ANSI N13.1-1969, "Guide to Sampling Airborne Radioactive Materials in Nuclear Facilities." IBR approved for 61.93(b)(2)(ii) and 61.107(b)(2)(ii).

(2) ANSI/HPS N13.1-1999 ``Sampling and Monitoring Releases of Airborne Radioactive Substances from the Stacks and Ducts of Nuclear Facilities," IBR approved October 9, 2002, [[Page 36]] for Secs. 61.93(c); 61.107(d) and Method 114, paragraph 2.1 of Appendix B to 40 CFR part 61

(d) The following material is available from the Superintendent of Documents, U.S. Government Printing Office, Washington, DC 20402-9325, telephone (202) 512-1800 or outside of Washington, DC area: 1-866-512-1800.

(1) Test Methods for Evaluating Solid Waste, Physical/Chemical Methods, EPA Publication SW-846, Third Edition, November 1986, as amended by Revision I, December 1987, Order Number 955-001-00000-1:

(i) Method 8020, Aromatic Volatile Organics, IBR approved March 7, 1990, for Sec. 61.355(c)(2)(iv)(A).

(ii) Method 8021, Volatile Organic Compounds in Water by Purge and Trap Capillary Column Gas Chromatography with Photoionization and Electrolytic Conductivity Detectors in Series, IBR approved March 7, 1990, for Sec. 61.355(c)(2)(iv)(B).

(iii) Method 8240, Gas Chromatography/Mass Spectrometry for Volatile Organics, IBR approved March 7, 1990, for Sec. 61.355(c)(2)(iv)(C).

(iv) Method 8260, Gas Chromatography/Mass Spectrometry for Volatile Organics: Capillary Column Technique, IBR approved March 7, 1990, for Sec. 61.355(c)(2)(iv)(D).

(e) The materials listed in this paragraph (e) are available for purchase from the American Petroleum Institute (API), 1220 L Street, NW., Washington, DC 20005.

(1) API Publication 2517, Evaporative Loss from External Floating- Roof Tanks, Third Edition. February 1989. IBR approved December 14, 2000 for Sec. 61.241.

(2) [Reserved]

[48 FR 3740, Jan. 27, 1983, as amended at 48 FR 55266, Dec. 9, 1983; 49 FR 23520, June 6, 1984; 51 FR 34914, Sept. 30, 1986; 54 FR 38073, Sept. 14, 1989; 54 FR 51704, Dec. 15, 1989; 55 FR 8341, Mar. 7, 1990; 55 FR 18331, May 2, 1990; 55 FR 22027, May 31, 1990; 55 FR 32914, Aug. 13, 1990; 65 FR 62150, Oct. 17, 2000; 65 FR 78280, Dec. 14, 2000; 67 FR 57166, Sept. 9, 2002; 69 FR 18803, Apr. 9, 2004]

§ 61.19 Circumvention.

No owner or operator shall build, erect, install, or use any article machine, equipment, process, or method, the use of which conceals an emission which would otherwise constitute a violation of an applicable standard. Such concealment includes, but is not limited to, the use of gaseous dilutants to achieve compliance with a visible emissions standard, and the piecemeal carrying out of an operation to avoid coverage by a standard that applies only to operations larger than a specified size.

[40 FR 48299, Oct. 14, 1975. Redesignated at 50 FR 46294, Nov. 7, 1985]

Subpart FF-National Emission Standard for Benzene Waste Operations

Source: 55 FR 8346, Mar. 7, 1990, unless otherwise noted.

§ 61.340 Applicability.

(a) The provisions of this subpart apply to owners and operators of chemical manufacturing plants, coke by-product recovery plants, and petroleum refineries.

(b) The provisions of this subpart apply to owners and operators of hazardous waste treatment, storage, and disposal facilities that treat, store, or dispose of hazardous waste generated by any facility listed in paragraph (a) of this section. The waste streams at hazardous waste treatment, storage, and disposal facilities subject to the provisions of this subpart are the benzene-containing hazardous waste from any facility listed in paragraph (a) of this section. A hazardous waste treatment, storage, and disposal facility is a facility that must obtain a hazardous waste management permit under subtitle C of the Solid Waste Disposal Act.

(c) At each facility identified in paragraph (a) or (b) of this section, the following waste is exempt from the requirements of this subpart:

(1) Waste in the form of gases or vapors that is emitted from process fluids:

(2) Waste that is contained in a segregated stormwater sewer system.

(d) At each facility identified in paragraph (a) or (b) of this section, any gaseous stream from a waste management unit, treatment process, or wastewater treatment system routed to a fuel gas system, as defined in §61.341, is exempt from this subpart. No testing, monitoring, recordkeeping, or reporting is required under this subpart for any gaseous stream from a waste management unit, treatment process, or wastewater treatment unit routed to a fuel gas system.

[55 FR 8346, Mar. 7, 1990, as amended at 55 FR 37231, Sept. 10, 1990; 58 FR 3095, Jan. 7, 1993; 67 FR 68531, Nov. 12, 2002]

§ 61.341 Definitions.

Benzene concentration means the fraction by weight of benzene in a waste as determined in accordance with the procedures specified in §61.355 of this subpart.

Car-seal means a seal that is placed on a device that is used to change the position of a valve (e.g., from opened to closed) in such a way that the position of the valve cannot be changed without breaking the seal.

Chemical manufacturing plant means any facility engaged in the production of chemicals by chemical, thermal, physical, or biological processes for use as a product, co-product, by-product, or intermediate including but not limited to industrial organic chemicals, organic pesticide products, pharmaceutical preparations, paint and allied products, fertilizers, and agricultural chemicals. Examples of chemical manufacturing plants include facilities at which process units are operated to produce one or more of the following chemicals: benzenesulfonic acid, benzene, chlorobenzene, cumene, cyclohexane, ethylene, ethylbenzene, hydroquinone, linear alklylbenzene, nitrobenzene, resorcinol, sulfolane, or styrene.

Closed-vent system means a system that is not open to the atmosphere and is composed of piping, ductwork, connections, and, if necessary, flow inducing devices that transport gas or vapor from an emission source to a control device.

Coke by-product recovery plant means any facility designed and operated for the separation and recovery of coal tar derivatives (by-products) evolved from coal during the coking process of a coke oven battery.

Container means any portable waste management unit in which a material is stored, transported, treated, or otherwise handled. Examples of containers are drums, barrels, tank trucks, barges, dumpsters, tank cars, dump trucks, and ships.

Control device means an enclosed combustion device, vapor recovery system, or flare.

Cover means a device or system which is placed on or over a waste placed in a waste management unit so that the entire waste surface area is enclosed and sealed to minimize air emissions. A cover may have openings necessary for operation, inspection, and maintenance of the waste management unit such as access hatches, sampling ports, and gauge wells provided that each opening is closed and sealed when not in use. Example of covers include a fixed roof installed on a tank, a lid installed on a container, and an air-supported enclosure installed over a waste management unit.

External floating roof means a pontoon-type or double-deck type cover with certain rim sealing mechanisms that rests on the liquid surface in a waste management unit with no fixed roof.

Facility means all process units and product tanks that generate waste within a stationary source, and all waste management units that are used for waste treatment, storage, or disposal within a stationary source.

Fixed roof means a cover that is mounted on a waste management unit in a stationary manner and that does not move with fluctuations in liquid level.

Floating roof means a cover with certain rim sealing mechanisms consisting of a double deck, pontoon single deck, internal floating cover or covered floating roof, which rests upon and is supported by the liquid being contained, and is equipped with a closure seal or seals to close the space between the roof edge and unit wall.

Flow indicator means a device which indicates whether gas flow is present in a line or vent system.

Fuel gas system means the offsite and onsite piping and control system that gathers gaseous streams generated by facility operations, may blend them with sources of gas, if available, and transports the blended gaseous fuel at suitable pressures for use as fuel in heaters, furnaces, boilers, incinerators, gas turbines, and other combustion devices located within or outside the facility. The fuel is piped directly to each individual combustion device, and the system typically operates at pressures over atmospheric.

Individual drain system means the system used to convey waste from a process unit, product storage tank, or waste management unit to a waste management unit. The term includes all process drains and common junction boxes, together with their associated sewer lines and other junction boxes, down to the receiving waste management unit.

Internal floating roof means a cover that rests or floats on the liquid surface inside a waste management unit that has a fixed roof.

Liquid-mounted seal means a foam or liquid-filled primary seal mounted in contact with the liquid between the waste management unit wall and the floating roof continuously around the circumference.

Loading means the introduction of waste into a waste management unit but not necessarily to complete capacity (also referred to as filling).

Maximum organic vapor pressure means the equilibrium partial pressure exerted by the waste at the temperature equal to the highest calendar-month average of the waste storage temperature for waste stored above or below the ambient temperature or at the local maximum monthly average temperature as reported by the National Weather Service for waste stored at the ambient temperature, as determined:

(1) In accordance with §§60.17(c); or

(2) As obtained from standard reference texts; or

(3) In accordance with §§60.17(a)(37); or

(4) Any other method approved by the Administrator.

No detectable emissions means less than 500 parts per million by volume (ppmv) above background levels, as measured by a detection instrument reading in accordance with the procedures specified in §§61.355(h) of this subpart.

Oil-water separator means a waste management unit, generally a tank or surface impoundment, used to separate oil from water. An oil-water separator consists of not only the separation unit but also the forebay and other separator basins, skimmers, weirs, grit chambers, sludge hoppers, and bar screens that are located directly after the individual drain system and prior to additional treatment units such as an air flotation unit, clarifier, or biological treatment unit. Examples of an oil-water separator include an API separator, parallel-plate interceptor, and corrugated-plate

interceptor with the associated ancillary equipment.

Petroleum refinery means any facility engaged in producing gasoline, kerosene, distillate fuel oils, residual fuel oils, lubricants, or other products through the distillation of petroleum, or through the redistillation, cracking, or reforming of unfinished petroleum derivatives.

Petroleum means the crude oil removed from the earth and the oils derived from tar sands, shale, and coal

Point of waste generation means the location where the waste stream exits the process unit component or storage tank prior to handling or treatment in an operation that is not an integral part of the production process, or in the case of waste management units that generate new wastes after treatment, the location where the waste stream exits the waste management unit component.

Process unit means equipment assembled and connected by pipes or ducts to produce intermediate or final products. A process unit can be operated independently if supplied with sufficient fuel or raw materials and sufficient product storage facilities.

Process unit turnaround means the shutting down of the operations of a process unit, the purging of the contents of the process unit, the maintenance or repair work, followed by restarting of the process.

Process unit turnaround waste means a waste that is generated as a result of a process unit turnaround.

Process wastewater means water which comes in contact with benzene during manufacturing or processing operations conducted within a process unit. Process wastewater is not organic wastes, process fluids, product tank drawdown, cooling tower blowdown, steam trap condensate, or landfill leachate.

Process wastewater stream means a waste stream that contains only process wastewater.

Product tank means a stationary unit that is designed to contain an accumulation of materials that are fed to or produced by a process unit, and is constructed primarily of non-earthen materials (e.g., wood, concrete, steel, plastic) which provide structural support.

Product tank drawdown means any material or mixture of materials discharged from a product tank for the purpose of removing water or other contaminants from the product tank.

Safety device means a closure device such as a pressure relief valve, frangible disc, fusible plug, or any other type of device which functions exclusively to prevent physical damage or permanent deformation to a unit or its air emission control equipment by venting gases or vapors directly to the atmosphere during unsafe conditions resulting from an unplanned, accidental, or emergency event. For the purpose of this subpart, a safety device is not used for routine venting of gases or vapors from the vapor headspace underneath a cover such as during filling of the unit or to adjust the pressure in this vapor headspace in response to normal daily diurnal ambient temperature fluctuations. A safety device is designed to remain in a closed position during normal operations and open only when the internal pressure, or another relevant parameter, exceeds the device threshold setting applicable to the air emission control equipment as determined by the owner or operator based on manufacturer recommendations, applicable regulations, fire protection and prevention codes, standard engineering codes and practices, or other requirements for the safe handling of flammable, ignitable, explosive, reactive, or hazardous materials.

Segregated stormwater sewer system means a drain and collection system designed and operated for the sole purpose of collecting rainfall runoff at a facility, and which is segregated from all other individual drain systems.

Sewer line means a lateral, trunk line, branch line, or other enclosed conduit used to convey waste to a downstream waste management unit.

Slop oil means the floating oil and solids that accumulate on the surface of an oil-water separator.

Sour water stream means a stream that:

(1) Contains ammonia or sulfur compounds (usually hydrogen sulfide) at concentrations of 10 ppm by weight or more;

(2) is generated from separation of water from a feed stock, intermediate, or product that contained ammonia or sulfur compounds; and

(3) requires treatment to remove the ammonia or sulfur compounds.

Sour water stripper means a unit that:

(1) Is designed and operated to remove ammonia or sulfur compounds (usually hydrogen sulfide) from sour water streams;

(2) has the sour water streams transferred to the stripper through hard piping or other enclosed system; and

(3) is operated in such a manner that the offgases are sent to a sulfur recovery unit, processing unit, incinerator, flare, or other combustion device.

Surface impoundment means a waste management unit which is a natural topographic depression, man-made excavation, or diked area formed primarily of earthen materials (although it may be lined with man-made materials), which is designed to hold an accumulation of liquid wastes or waste containing free liquids, and which is not an injection well. Examples of surface impoundments are holding, storage, settling, and aeration pits, ponds, and lagoons.

Tank means a stationary waste management unit that is designed to contain an accumulation of waste and is constructed primarily of nonearthen materials (e.g., wood, concrete, steel, plastic) which provide structural support.

Treatment process means a stream stripping unit, thin-film evaporation unit, waste incinerator, or any other process used to comply with §61.348 of this subpart.

Vapor-mounted seal means a foam-filled primary seal mounted continuously around the perimeter of a waste management unit so there is an annular vapor space underneath the seal. The annular vapor space is bounded by the bottom of the primary seal, the unit wall, the liquid surface, and the floating roof.

Waste means any material resulting from industrial, commercial, mining or agricultural operations, or from community activities that is discarded or is being accumulated, stored, or physically, chemically, thermally, or biologically treated prior to being discarded, recycled, or discharged.

Waste management unit means a piece of equipment, structure, or transport mechanism used in handling, storage, treatment, or disposal of waste. Examples of a waste management unit include a tank, surface impoundment, container, oil-water separator, individual drain system, steam stripping unit, thin-film evaporation unit, waste incinerator, and landfill.

Waste stream means the waste generated by a particular process unit, product tank, or waste management unit. The characteristics of the waste stream (e.g., flow rate, benzene concentration, water content) are determined at the point of waste generation. Examples of a waste stream include process wastewater, product tank drawdown, sludge and slop oil removed from waste management units, and landfill leachate.

Wastewater treatment system means any component, piece of equipment, or installation that receives, manages, or treats process wastewater, product tank drawdown, or landfill leachate prior to direct or indirect discharge in accordance with the National Pollutant Discharge Elimination System permit regulations under 40 CFR part 122. These systems typically include individual drain systems, oil-water separators, air flotation units, equalization tanks, and biological treatment units.

Water seal controls means a seal pot, p-leg trap, or other type of trap filled with water (e.g., flooded sewers that maintain water levels adequate to prevent air flow through the system) that creates a water barrier between the sewer line and the atmosphere. The water level of the seal must be maintained in the vertical leg of a drain in order to be considered a water seal.

[55 FR 8346, Mar. 7, 1990; 55 FR 12444, Apr. 3, 1990, as amended at 58 FR 3095, Jan. 7, 1993; 67 FR 68531, Nov. 12, 2002]

§ 61.342 Standards: General.

(a) An owner or operator of a facility at which the total annual benzene quantity from facility waste is less than 10 megagrams per year (Mg/yr) (11 ton/yr) shall be exempt from the requirements of paragraphs (b) and (c) of this section. The total annual benzene quantity

from facility waste is the sum of the annual benzene quantity for each waste stream at the facility that has a flow-weighted annual average water content greater than 10 percent or that is mixed with water, or other wastes, at any time and the mixture has an annual average water content greater than 10 percent. The benzene quantity in a waste stream is to be counted only once without multiple counting if other waste streams are mixed with or generated from the original waste stream. Other specific requirements for calculating the total annual benzene waste quantity are as follows:

(1) Wastes that are exempted from control under §61.342(c)(2) and 61.342(c)(3) are included in the calculation of the total annual benzene quantity if they have an annual average water content greater than 10 percent, or if they are mixed with water or other wastes at any time and the mixture has an annual average water content greater than 10 percent.

(2) The benzene in a material subject to this subpart that is sold is included in the calculation of the total annual benzene quantity if the material has an annual average water content greater than 10 percent.

(3) Benzene in wastes generated by remediation activities conducted at the facility, such as the excavation of contaminated soil, pumping and treatment of groundwater, and the recovery of product from soil or groundwater, are not included in the calculation of total annual benzene quantity for that facility. If the facility's total annual benzene quantity is 10 Mg/yr (11 ton/yr) or more, wastes generated by remediation activities are subject to the requirements of paragraphs (c) through (h) of this section. If the facility is managing remediation waste generated offsite, the benzene in this waste shall be included in the calculation of total annual benzene quantity in facility waste, if the waste streams have an annual average water content greater than 10 percent, or if they are mixed with water or other wastes at any time and the mixture has an annual average water content greater than 10 percent.

(4) The total annual benzene quantity is determined based upon the quantity of benzene in the waste before any waste treatment occurs to remove the benzene except as specified in §61.355(c)(1)(i) (A) through (C).

(b) Each owner or operator of a facility at which the total annual benzene quantity from facility waste is equal to or greater than 10 Mg/yr (11 ton/yr) as determined in paragraph (a) of this section shall be in compliance with the requirements of paragraphs (c) through (h) of this section no later than 90 days following the effective date, unless a waiver of compliance has been obtained under §61.11, or by the initial startup for a new source with an initial startup after the effective date.

(1) The owner or operator of an existing source unable to comply with the rule within the required time may request a waiver of compliance under §61.10.

(2) As part of the waiver application, the owner or operator shall submit to the Administrator a plan under §61.10(b)(3) that is an enforceable commitment to obtain environmental benefits to mitigate the benzene emissions that result from extending the compliance date. The plan shall include the following information:

(i) A description of the method of compliance, including the control approach, schedule for installing controls, and quantity of the benzene emissions that result from extending the compliance date;

(ii) If the control approach involves a compliance strategy designed to obtain integrated compliance with multiple regulatory requirements, a description of the other regulations involved and their effective dates; and

(iii) A description of the actions to be taken at the facility to obtain mitigating environmental benefits, including how the benefits will be obtained, the schedule for these actions, and an estimate of the quantifiable benefits that directly result from these actions.

(c) Each owner or operator of a facility at which the total annual benzene quantity from facility waste is equal to or greater than 10 Mg/yr (11 ton/yr) as determined in paragraph (a) of this section shall manage and treat the facility waste as follows:

(1) For each waste stream that contains benzene, including (but not limited to) organic waste streams that contain less than 10 percent water and aqueous waste streams, even if the wastes are not discharged to an individual drain system, the owner or operator shall:

(i) Remove or destroy the benzene contained in the waste using a treatment process or wastewater treatment system that complies with the standards specified in §61.348 of this subpart.

(ii) Comply with the standards specified in §61.343 through 61.347 of this subpart for each waste management unit that receives or manages the waste stream prior to and during treatment of the waste stream in accordance with paragraph (c)(1)(i) of this section.

(iii) Each waste management unit used to manage or treat waste streams that will be recycled to a process shall comply with the standards specified in §61.343 through 61.347. Once the waste stream is recycled to a process, including to a tank used for the storage of production process feed, product, or product intermediates, unless this tank is used primarily for the storage of wastes, the material is no longer subject to paragraph (c) of this section.

(2) A waste stream is exempt from paragraph (c)(1) of this section provided that the owner or operator demonstrates initially and, thereafter, at least once per year that the flow-weighted annual average benzene concentration for the waste stream is less than 10 ppmw as determined by the procedures specified in §61.355(c)(2) or §61.355(c)(3).

(3) A waste stream is exempt from paragraph (c)(1) of this section provided that the owner or operator demonstrates initially and, thereafter, at least once per year that the conditions specified in either paragraph (c)(3)(i) or (c)(3)(ii) of this section are met.

(i) The waste stream is process wastewater that has a flow rate less than 0.02 liters per minute (0.005 gallons per minute) or an annual wastewater quantity of less than 10 Mg/yr (11 ton/yr); or

(ii) All of the following conditions are met:

(A) The owner or operator does not choose to exempt process wastewater under paragraph (c)(3)(i) of this section,

(B) The total annual benzene quantity in all waste streams chosen for exemption in paragraph (c)(3)(ii) of this section does not exceed 2.0 Mg/yr (2.2 ton/yr) as determined in the procedures in §61.355(j), and

(C) The total annual benzene quantity in a waste stream chosen for exemption, including process unit turnaround waste, is determined for the year in which the waste is generated.

(d) As an alternative to the requirements specified in paragraphs (c) and (e) of this section, an owner or operator of a facility at which the total annual benzene quantity from facility waste is equal to or greater than 10 Mg/yr (11 ton/yr) as determined in paragraph (a) of this section may elect to manage and treat the facility waste as follows:

(1) The owner or operator shall manage and treat facility waste other than process wastewater in accordance with the requirements of paragraph (c)(1) of this section.

(2) The owner or operator shall manage and treat process wastewater in accordance with the following requirements:

(i) Process wastewater shall be treated to achieve a total annual benzene quantity from facility process wastewater less than 1 Mg/yr (1.1 ton/yr). Total annual benzene from facility process wastewater shall be determined by adding together the annual benzene quantity at the point of waste generation for each untreated process wastewater stream plus the annual benzene quantity exiting the treatment process for each process wastewater stream treated in accordance with the requirements of paragraph (c)(1)(i) of this section.

(ii) Each treated process wastewater stream identified in paragraph (d)(2)(i) of this section shall be managed and treated in accordance with paragraph (c)(1) of this section.

(iii) Each untreated process wastewater stream identified in paragraph (d)(2)(i) of this section is exempt from the requirements of paragraph (c)(1) of this section.

(e) As an alternative to the requirements specified in paragraphs (c) and (d) of this section, an owner or operator of a facility at which the total annual benzene quantity from facility waste is equal to or greater than 10 Mg/yr (11 ton/yr) as determined in paragraph

(a) of this section may elect to manage and treat the facility waste as follows:

(1) The owner or operator shall manage and treat facility waste with a flow-weighted annual average water content of less than 10 percent in accordance with the requirements of paragraph (c)(1) of this section; and

(2) The owner or operator shall manage and treat facility waste (including remediation and process unit turnaround waste) with a flow-weighted annual average water content of 10 percent or greater, on a volume basis as total water, and each waste stream that is mixed with water or wastes at any time such that the resulting mixture has an annual water content greater than 10 percent, in accordance with the following:

(i) The benzene quantity for the wastes described in paragraph (e)(2) of this section must be equal to or less than 6.0 Mg/yr (6.6 ton/yr), as determined in §61.355(k). Wastes as described in paragraph (e)(2) of this section that are transferred offsite shall be included in the determination of benzene quantity as provided in §61.355(k). The provisions of paragraph (f) of this section shall not apply to any owner or operator who elects to comply with the provisions of paragraph (e) of this section.

(ii) The determination of benzene quantity for each waste stream defined in paragraph (e)(2) of this section shall be made in accordance with §61.355(k).

(f) Rather than treating the waste onsite, an owner or operator may elect to comply with paragraph (c)(1)(i) of this section by transferring the waste offsite to another facility where the waste is treated in accordance with the requirements of paragraph (c)(1)(i) of this section. The owner or operator transferring the waste shall:

(1) Comply with the standards specified in §61.343 through 61.347 of this subpart for each waste management unit that receives or manages the waste prior to shipment of the waste offsite.

(2) Include with each offsite waste shipment a notice stating that the waste contains benzene which is required to be managed and treated in accordance with the provisions of this subpart.

(g) Compliance with this subpart will be determined by review of facility records and results from tests and inspections using methods and procedures specified in §61.355 of this subpart.

(h) Permission to use an alternative means of compliance to meet the requirements of §61.342 through 61.352 of this subpart may be granted by the Administrator as provided in §61.353 of this subpart.

[55 FR 8346, Mar. 7, 1990, as amended at 58 FR 3095, Jan. 7, 1993; 65 FR 62159, 62160, Oct. 17, 2000]

§ 61.343 Standards: Tanks.

(a) Except as provided in paragraph (b) of this section and in §61.351, the owner or operator must meet the standards in paragraph (a)(1) or (2) of this section for each tank in which the waste stream is placed in accordance with §61.342 (c)(1)(ii). The standards in this section apply to the treatment and storage of the waste stream in a tank, including dewatering.

(1) The owner or operator shall install, operate, and maintain a fixed-roof and closed-vent system that routes all organic vapors vented from the tank to a control device.

(i) The fixed-roof shall meet the following requirements:

(A) The cover and all openings (e.g., access hatches, sampling ports, and gauge wells) shall be designed to operate with no detectable emissions as indicated by an instrument reading of less than 500 ppmv above background, as determined initially and thereafter at least once per year by the methods specified in §61.355(h) of this subpart.

(B) Each opening shall be maintained in a closed, sealed position (e.g., covered by a lid that is gasketed and latched) at all times that waste is in the tank except when it is necessary to use the opening for waste sampling or removal, or for equipment inspection, maintenance, or repair.

(C) If the cover and closed-vent system operate such that the tank is maintained at a pressure less than atmospheric pressure, then paragraph (a)(1)(i)(B) of this section does not apply to any opening that meets all of the following conditions:

(1) The purpose of the opening is to provide dilution air to reduce the explosion hazard;

(2) The opening is designed to operate with no detectable emissions as indicated by an instrument reading of less than 500 ppmv above background, as determined initially and thereafter at least once per year by the methods specified in §61.355(h); and

(3) The pressure is monitored continuously to ensure that the pressure in the tank remains below atmospheric pressure.

(ii) The closed-vent system and control device shall be designed and operated in accordance with the requirements of §61.349 of this subpart.

(2) The owner or operator must install, operate, and maintain an enclosure and closed-vent system that routes all organic vapors vented from the tank, located inside the enclosure, to a control device in accordance with the requirements specified in paragraph (e) of this section.

(b) For a tank that meets all the conditions specified in paragraph (b)(1) of this section, the owner or operator may elect to comply with paragraph (b)(2) of this section as an alternative to the requirements specified in paragraph (a)(1) of this section.

(1) The waste managed in the tank complying with paragraph (b)(2) of this section shall meet all of the following conditions:

(i) Each waste stream managed in the tank must have a flow-weighted annual average water content less than or equal to 10 percent water, on a volume basis as total water.

(ii) The waste managed in the tank either:

(A) Has a maximum organic vapor pressure less than 5.2 kilopascals (kPa) (0.75 pounds per square inch (psi));

(B) Has a maximum organic vapor pressure less than 27.6 kPa (4.0 psi) and is managed in a tank having design capacity less than 151 m^3 (40,000 gal); or

(C) Has a maximum organic vapor pressure less than 76.6 kPa (11.1 psi) and is managed in a tank having a design capacity less than 75 m^3 (20,000 gal).

(2) The owner or operator shall install, operate, and maintain a fixed roof as specified in paragraph (a)(1)(i).

(3) For each tank complying with paragraph (b) of this section, one or more devices which vent directly to the atmosphere may be used on the tank provided each device remains in a closed, sealed position during normal operations except when the device needs to open to prevent physical damage or permanent deformation of the tank or cover resulting from filling or emptying the tank, diurnal temperature changes, atmospheric pressure changes or malfunction of the unit in accordance with good engineering and safety practices for handling flammable, explosive, or other hazardous materials.

(c) Each fixed-roof, seal, access door, and all other openings shall be checked by visual inspection initially and quarterly thereafter to ensure that no cracks or gaps occur and that access doors and other openings are closed and gasketed properly.

(d) Except as provided in §61.350 of this subpart, when a broken seal or gasket or other problem is identified, or when detectable emissions are measured, first efforts at repair shall be made as soon as practicable, but not later than 45 calendar days after identification.

(e) Each owner or operator who controls air pollutant emissions by using an enclosure vented through a closed-vent system to a control device must meet the requirements specified in paragraphs (e)(1) through (4) of this section.

(1) The tank must be located inside a total enclosure. The enclosure must be designed and operated in accordance with the criteria for a permanent total enclosure as specified in "Procedure T – Criteria for and Verification of a Permanent or Temporary Total Enclosure" in 40 CFR 52.741, appendix B. The enclosure may have permanent or temporary openings to allow worker access; passage of material into or out of the enclosure by conveyor, vehicles, or other mechanical means; entry of permanent mechanical or electrical equipment; or direct airflow into the enclosure. The owner or operator must perform the verification procedure for the enclosure as specified in section 5.0 of Procedure T initially when the enclosure is first installed and, thereafter, annually. A facility that has conducted an initial compliance demonstration and that

performs annual compliance demonstrations in accordance with the requirements for Tank Level 2 control requirements 40 CFR 264.1084(i) or 40 CFR 265(i) is not required to make repeat demonstrations of initial and continuous compliance for the purposes of this subpart.

(2) The enclosure must be vented through a closed-vent system to a control device that is designed and operated in accordance with the standards for control devices specified in §61.349.

(3) Safety devices, as defined in this subpart, may be installed and operated as necessary on any enclosure, closed-vent system, or control device used to comply with the requirements of paragraphs (e)(1) and (2) of this section.

(4) The closed-vent system must be designed and operated in accordance with the requirements of §61.349.

[55 FR 8346, Mar. 7, 1990, as amended at 55 FR 18331, May 2, 1990; 58 FR 3096, Jan. 7, 1993; 67 FR 68532, Nov. 12, 2002; 68 FR 6082, Feb. 6, 2003; 68 FR 67935, Dec. 4, 2003]

§ 61.344 Standards: Surface impoundments.

(a) The owner or operator shall meet the following standards for each surface impoundment in which waste is placed in accordance with §61.342(c)(1)(ii) of this subpart:

(1) The owner or operator shall install, operate, and maintain on each surface impoundment a cover (e.g., air-supported structure or rigid cover) and closed-vent system that routes all organic vapors vented from the surface impoundment to a control device.

(i) The cover shall meet the following requirements:

(A) The cover and all openings (e.g., access hatches, sampling ports, and gauge wells) shall be designed to operate with no detectable emissions as indicated by an instrument reading of less than 500 ppmv above background, initially and thereafter at least once per year by the methods specified in §61.355(h) of this subpart.

(B) Each opening shall be maintained in a closed, sealed position (e.g., covered by a lid that is gasketed and latched) at all times that waste is in the surface impoundment except when it is necessary to use the opening for waste sampling or removal, or for equipment inspection, maintenance, or repair.

(C) If the cover and closed-vent system operate such that the enclosure of the surface impoundment is maintained at a pressure less than atmospheric pressure, then paragraph (a)(1)(i)(B) of this section does not apply to any opening that meets all of the following conditions:

(1) The purpose of the opening is to provide dilution air to reduce the explosion hazard;

(2) The opening is designed to operate with no detectable emissions as indicated by an instrument reading of less than 500 ppmv above background, as determined initially and thereafter at least once per year by the methods specified in §61.355(h) of this subpart; and

(3) The pressure is monitored continuously to ensure that the pressure in the enclosure of the surface impoundment remains below atmospheric pressure.

(D) The cover shall be used at all times that waste is placed in the surface impoundment except during removal of treatment residuals in accordance with 40 CFR part 268.4 or closure of the surface impoundment in accordance with 40 CFR 264.228. (Note: the treatment residuals generated by these activities may be subject to the requirements of this part.)

(ii) The closed-vent system and control device shall be designed and operated in accordance with §61.349 of this subpart.

(b) Each cover seal, access hatch, and all other openings shall be checked by visual inspection initially and quarterly thereafter to ensure that no cracks or gaps occur and that access hatches and other openings are closed and gasketed properly.

(c) Except as provided in §61.350 of this subpart, when a broken seal or gasket or other problem is identified, or when detectable emissions are measured, first efforts at repair shall be made as soon as practicable, but not later than 15 calendar days after identification.

[55 FR 8346, Mar. 7, 1990, as amended at 58 FR 3097, Jan. 7, 1993]

§ 61.345 Standards: Containers.

(a) The owner or operator shall meet the following standards for each container in which waste is placed in accordance with §61.342(c)(1)(ii) of this subpart:

(1) The owner or operator shall install, operate, and maintain a cover on each container used to handle, transfer, or store waste in accordance with the following requirements:

(i) The cover and all openings (e.g., bungs, hatches, and sampling ports) shall be designed to operate with no detectable emissions as indicated by an instrument reading of less than 500 ppmv above background, initially and thereafter at least once per year by the methods specified in §61.355(h) of this subpart.

(ii) Except as provided in paragraph (a)(4) of this section, each opening shall be maintained in a closed, sealed position (e.g., covered by a lid that is gasketed and latched) at all times that waste is in the container except when it is necessary to use the opening for waste loading, removal, inspection, or sampling.

(2) When a waste is transferred into a container by pumping, the owner or operator shall perform the transfer using a submerged fill pipe. The submerged fill pipe outlet shall extend to within two fill pipe diameters of the bottom of the container while the container is being loaded. During loading of the waste, the cover shall remain in place and all openings shall be maintained in a closed, sealed position except for those openings required for the submerged fill pipe, those openings required for venting of the container to prevent physical damage or permanent deformation of the container or cover, and any openings complying with paragraph (a)(4) of this section.

(3) Treatment of a waste in a container, including aeration, thermal or other treatment, must be performed by the owner or operator in a manner such that while the waste is being treated the container meets the standards specified in paragraphs (a)(3)(i) through (iii) of this section, except for covers and closed-vent systems that meet the requirements in paragraph (a)(4) of this section.

(i) The owner or operator must either:

(A) Vent the container inside a total enclosure which is exhausted through a closed-vent system to a control device in accordance with the requirements of paragraphs (a)(3)(ii)(A) and (B) of this section; or

(B) Vent the covered or closed container directly through a closed- vent system to a control device in accordance with the requirements of paragraphs (a)(3)(ii)(B) and (C) of this section.

(ii) The owner or operator must meet the following requirements, as applicable to the type of air emission control equipment selected by the owner or operator:

(A) The total enclosure must be designed and operated in accordance with the criteria for a permanent total enclosure as specified in section 5 of the "Procedure T--Criteria for and Verification of a Permanent or Temporary Total Enclosure" in 40 CFR 52.741, appendix B. The enclosure may have permanent or temporary openings to allow worker access; passage of containers through the enclosure by conveyor or other mechanical means; entry of permanent mechanical or electrical equipment; or direct airflow into the enclosure. The owner or operator must perform the verification procedure for the enclosure as specified in section 5.0 of "Procedure T--Criteria for and Verification of a Permanent or Temporary Total Enclosure" initially when the enclosure is first installed and, thereafter, annually. A facility that has conducted an initial compliance demonstration and that performs annual compliance demonstrations in accordance with the Container Level 3 control requirements in 40 CFR 264.1086(e)(2)(i) or 40 CFR 265.1086(e)(2)(i) is not required to make repeat demonstrations of initial and continuous compliance for the purposes of this subpart.

(B) The closed-vent system and control device must be designed and operated in accordance with the requirements of §61.349.

(C) For a container cover, the cover and all openings (e.g., doors, hatches) must be designed to operate with no detectable emissions as indicated by an instrument reading of less than 500 ppmv above background, initially and thereafter at least once per year by the methods specified in §61.355(h).

(iii) Safety devices, as defined in this subpart,

may be installed and operated as necessary on any container, enclosure, closed-vent system, or control device used to comply with the requirements of paragraph (a)(3)(i) of this section.

(4) If the cover and closed-vent system operate such that the container is maintained at a pressure less than atmospheric pressure, the owner or operator may operate the system with an opening that is not sealed and kept closed at all times if the following conditions are met:

(i) The purpose of the opening is to provide dilution air to reduce the explosion hazard;

(ii) The opening is designed to operate with no detectable emissions as indicated by an instrument reading of less than 500 ppmv above background, as determined initially and thereafter at least once per year by methods specified in §61.355(h); and

(iii) The pressure is monitored continuously to ensure that the pressure in the container remains below atmospheric pressure.

(b) Each cover and all openings shall be visually inspected initially and quarterly thereafter to ensure that they are closed and gasketed properly.

(c) Except as provided in §61.350 of this subpart, when a broken seal or gasket or other problem is identified, first efforts at repair shall be made as soon as practicable, but not later than 15 calendar days after identification.

[55 FR 8346, Mar. 7, 1990, as amended at 58 FR 3097, Jan. 7, 1993; 67 FR 68532, Nov. 12, 2002; 68 FR 67936, Dec. 4, 2003]

§ 61.346 Standards: Individual drain systems.

(a) Except as provided in paragraph (b) of this section, the owner or operator shall meet the following standards for each individual drain system in which waste is placed in accordance with §61.342(c)(1)(ii) of this subpart:

(1) The owner or operator shall install, operate, and maintain on each drain system opening a cover and closed-vent system that routes all organic vapors vented from the drain system to a control device.

(i) The cover shall meet the following requirements:

(A) The cover and all openings (e.g., access hatches, sampling ports) shall be designed to operate with no detectable emissions as indicated by an instrument reading of less than 500 ppmv above background, initially and thereafter at least once per year by the methods specified in §61.355(h) of this subpart.

(B) Each opening shall be maintained in a closed, sealed position (e.g., covered by a lid that is gasketed and latched) at all times that waste is in the drain system except when it is necessary to use the opening for waste sampling or removal, or for equipment inspection, maintenance, or repair.

(C) If the cover and closed-vent system operate such that the individual drain system is maintained at a pressure less than atmospheric pressure, then paragraph (a)(1)(i)(B) of this section does not apply to any opening that meets all of the following conditions:

(1) The purpose of the opening is to provide dilution air to reduce the explosion hazard;

(2) The opening is designed to operate with no detectable emissions as indicated by an instrument reading of less than 500 ppmv above background, as determined initially and thereafter at least once per year by the methods specified in §61.355(h); and

(3) The pressure is monitored continuously to ensure that the pressure in the individual drain system remains below atmospheric pressure.

(ii) The closed-vent system and control device shall be designed and operated in accordance with §61.349 of this subpart.

(2) Each cover seal, access hatch, and all other openings shall be checked by visual inspection initially and quarterly thereafter to ensure that no cracks or gaps occur and that access hatches and other openings are closed and gasketed properly.

(3) Except as provided in §61.350 of this subpart, when a broken seal or gasket or other problem is identified, or when detectable emissions are measured, first efforts at repair shall be made as soon as practicable, but not later than 15 calendar days after identification.

(b) As an alternative to complying with paragraph (a) of this section, an owner or operator may elect to comply with the following requirements:

(1) Each drain shall be equipped with water seal controls or a tightly sealed cap or plug.

(2) Each junction box shall be equipped with a cover and may have a vent pipe. The vent pipe shall be at least 90 cm (3 ft) in length and shall not exceed 10.2 cm (4 in) in diameter.

(i) Junction box covers shall have a tight seal around the edge and shall be kept in place at all times, except during inspection and maintenance.

(ii) One of the following methods shall be used to control emissions from the junction box vent pipe to the atmosphere:

(A) Equip the junction box with a system to prevent the flow of organic vapors from the junction box vent pipe to the atmosphere during normal operation. An example of such a system includes use of water seal controls on the junction box. A flow indicator shall be installed, operated, and maintained on each junction box vent pipe to ensure that organic vapors are not vented from the junction box to the atmosphere during normal operation.

(B) Connect the junction box vent pipe to a closed-vent system and control device in accordance with §61.349 of this subpart.

(3) Each sewer line shall not be open to the atmosphere and shall be covered or enclosed in a manner so as to have no visual gaps or cracks in joints, seals, or other emission interfaces.

(4) Equipment installed in accordance with paragraphs (b)(1), (b)(2), or (b)(3) of this section shall be inspected as follows:

(i) Each drain using water seal controls shall be checked by visual or physical inspection initially and thereafter quarterly for indications of low water levels or other conditions that would reduce the effectiveness of water seal controls.

(ii) Each drain using a tightly sealed cap or plug shall be visually inspected initially and thereafter quarterly to ensure caps or plugs are in place and properly installed.

(iii) Each junction box shall be visually inspected initially and thereafter quarterly to ensure that the cover is in place and to ensure that the cover has a tight seal around the edge.

(iv) The unburied portion of each sewer line shall be visually inspected initially and thereafter quarterly for indication of cracks, gaps, or other problems that could result in benzene emissions.

(5) Except as provided in §61.350 of this subpart, when a broken seal, gap, crack or other problem is identified, first efforts at repair shall be made as soon as practicable, but not later than 15 calendar days after identification.

[55 FR 8346, Mar. 7, 1990, as amended at 55 FR 37231, Sept. 10, 1990; 58 FR 3097, Jan. 7, 1993]

§ 61.347 Standards: Oil-water separators.

(a) Except as provided in §61.352 of this subpart, the owner or operator shall meet the following standards for each oil-water separator in which waste is placed in accordance with §61.342(c)(1)(ii) of this subpart:

(1) The owner or operator shall install, operate, and maintain a fixed-roof and closed-vent system that routes all organic vapors vented from the oil-water separator to a control device.

(i) The fixed-roof shall meet the following requirements:

(A) The cover and all openings (e.g., access hatches, sampling ports, and gauge wells) shall be designed to operate with no detectable emissions as indicated by an instrument reading of less than 500 ppmv above background, as determined initially and thereafter at least once per year by the methods specified in §61.355(h) of this subpart.

(B) Each opening shall be maintained in a closed, sealed position (e.g., covered by a lid that is gasketed and latched) at all times that waste is in the oil-water separator except when it is necessary to use the opening for waste sampling or removal, or for equipment inspection, maintenance, or repair.

(C) If the cover and closed-vent system operate such that the oil-water separator is maintained at a pressure less than atmospheric pressure, then paragraph (a)(1)(i)(B) of this section does not apply to any opening that meets all of the following conditions:

(1) The purpose of the opening is to provide dilution air to reduce the explosion hazard;

(2) The opening is designed to operate with no

detectable emissions as indicated by an instrument reading of less than 500 ppmv above background, as determined initially and thereafter at least once per year by the methods specified in §61.355(h); and

(3) The pressure is monitored continuously to ensure that the pressure in the oil-water separator remains below atmospheric pressure.

(ii) The closed-vent system and control device shall be designed and operated in accordance with the requirements of §61.349 of this subpart.

(b) Each cover seal, access hatch, and all other openings shall be checked by visual inspection initially and quarterly thereafter to ensure that no cracks or gaps occur between the cover and oil-water separator wall and that access hatches and other openings are closed and gasketed properly.

(c) Except as provided in §61.350 of this subpart, when a broken seal or gasket or other problem is identified, or when detectable emissions are measured, first efforts at repair shall be made as soon as practicable, but not later than 15 calendar days after identification.

[55 FR 8346, Mar. 7, 1990, as amended at 58 FR 3098, Jan. 7, 1993]

§ 61.348 Standards: Treatment processes.

(a) Except as provided in paragraph (a)(5) of this section, the owner or operator shall treat the waste stream in accordance with the following requirements:

(1) The owner or operator shall design, install, operate, and maintain a treatment process that either:

(i) Removes benzene from the waste stream to a level less than 10 parts per million by weight (ppmw) on a flow-weighted annual average basis,

(ii) Removes benzene from the waste stream by 99 percent or more on a mass basis, or

(iii) Destroys benzene in the waste stream by incinerating the waste in a combustion unit that achieves a destruction efficiency of 99 percent or greater for benzene.

(2) Each treatment process complying with paragraphs (a)(1)(i) or (a)(1)(ii) of this section shall be designed and operated in accordance with the appropriate waste management unit standards specified in §61.343 through 61.347 of this subpart. For example, if a treatment process is a tank, then the owner or operator shall comply with §61.343 of this subpart.

(3) For the purpose of complying with the requirements specified in paragraph (a)(1)(i) of this section, the intentional or unintentional reduction in the benzene concentration of a waste stream by dilution of the waste stream with other wastes or materials is not allowed.

(4) An owner or operator may aggregate or mix together individual waste streams to create a combined waste stream for the purpose of facilitating treatment of waste to comply with the requirements of paragraph (a)(1) of this section except as provided in paragraph (a)(5) of this section.

(5) If an owner or operator aggregates or mixes any combination of process wastewater, product tank drawdown, or landfill leachate subject to §61.342(c)(1) of this subpart together with other waste streams to create a combined waste stream for the purpose of facilitating management or treatment of waste in a wastewater treatment system, then the wastewater treatment system shall be operated in accordance with paragraph (b) of this section. These provisions apply to above-ground wastewater treatment systems as well as those that are at or below ground level.

(b) Except for facilities complying with §61.342(e), the owner or operator that aggregates or mixes individual waste streams as defined in paragraph (a)(5) of this section for management and treatment in a wastewater treatment system shall comply with the following requirements:

(1) The owner or operator shall design and operate each waste management unit that comprises the wastewater treatment system in accordance with the appropriate standards specified in §61.343 through 61.347 of this subpart.

(2) The provisions of paragraph (b)(1) of this section do not apply to any waste management unit that the owner or operator demonstrates to meet the following conditions initially and, thereafter, at least once per year:

(i) The benzene content of each waste stream entering the waste management unit is less than 10 ppmw on a flow-weighted annual average basis as determined by the procedures specified in §61.355(c) of this subpart; and

(ii) The total annual benzene quantity contained in all waste streams managed or treated in exempt waste management units comprising the facility wastewater treatment systems is less than 1 Mg/yr (1.1 ton/yr). For this determination, total annual benzene quantity shall be calculated as follows:

(A) The total annual benzene quantity shall be calculated as the sum of the individual benzene quantities determined at each location where a waste stream first enters an exempt waste management unit. The benzene quantity discharged from an exempt waste management unit shall not be included in this calculation.

(B) The annual benzene quantity in a waste stream managed or treated in an enhanced biodegradation unit shall not be included in the calculation of the total annual benzene quantity, if the enhanced biodegradation unit is the first exempt unit in which the waste is managed or treated. A unit shall be considered enhanced biodegradation if it is a suspended-growth process that generates biomass, uses recycled biomass, and periodically removes biomass from the process. An enhanced biodegradation unit typically operates at a food-to-microorganism ratio in the range of 0.05 to 1.0 kg of biological oxygen demand per kg of biomass per day, a mixed liquor suspended solids ratio in the range of 1 to 8 grams per liter (0.008 to 0.7 pounds per liter), and a residence time in the range of 3 to 36 hours.

(c) The owner and operator shall demonstrate that each treatment process or wastewater treatment system unit, except as provided in paragraph (d) of this section, achieves the appropriate conditions specified in paragraphs (a) or (b) of this section in accordance with the following requirements:

(1) Engineering calculations in accordance with requirements specified in §61.356(e) of this subpart; or

(2) Performance tests conducted using the test methods and procedures that meet the requirements specified in §61.355 of this subpart.

(d) A treatment process or waste stream is in compliance with the requirements of this subpart and exempt from the requirements of paragraph (c) of this section provided that the owner or operator documents that the treatment process or waste stream is in compliance with other regulatory requirements as follows:

(1) The treatment process is a hazardous waste incinerator for which the owner or operator has been issued a final permit under 40 CFR part 270 and complies with the requirements of 40 CFR part 264, subpart O;

(2) The treatment process is an industrial furnace or boiler burning hazardous waste for energy recovery for which the owner or operator has been issued a final permit under 40 CFR part 270 and complies with the requirements of 40 CFR part 266, subpart D;

(3) The waste stream is treated by a means or to a level that meets benzene-specific treatment standards in accordance with the Land Disposal Restrictions under 40 CFR part 268, and the treatment process is designed and operated with a closed-vent system and control device meeting the requirements of §61.349 of this subpart;

(4) The waste stream is treated by a means or to a level that meets benzene-specific effluent limitations or performance standards in accordance with the Effluent Guidelines and Standards under 40 CFR parts 401-464, and the treatment process is designed and operated with a closed-vent system and control device meeting the requirements of §61.349 of this subpart; or

(5) The waste stream is discharged to an underground injection well for which the owner or operator has been issued a final permit under 40 CFR part 270 and complies with the requirements of 40 CFR part 122.

(e) Except as specified in paragraph (e)(3) of this section, if the treatment process or wastewater treatment system unit has any openings (e.g., access doors, hatches, etc.), all such openings shall be sealed (e.g., gasketed, latched, etc.) and kept closed at all times when waste is being treated, except during inspection and maintenance.

(1) Each seal, access door, and all other openings shall be checked by visual inspections initially and quarterly thereafter to

ensure that no cracks or gaps occur and that openings are closed and gasketed properly.

(2) Except as provided in §61.350 of this subpart, when a broken seal or gasket or other problem is identified, first efforts at repair shall be made as soon as practicable, but not later than 15 calendar days after identification.

(3) If the cover and closed-vent system operate such that the treatment process and wastewater treatment system unit are maintained at a pressure less than atmospheric pressure, the owner or operator may operate the system with an opening that is not sealed and kept closed at all times if the following conditions are met:

(i) The purpose of the opening is to provide dilution air to reduce the explosion hazard;

(ii) The opening is designed to operate with no detectable emissions as indicated by an instrument reading of less than 500 ppmv above background, as determined initially and thereafter at least once per year by the methods specified in §61.355(h); and

(iii) The pressure is monitored continuously to ensure that the pressure in the treatment process and wastewater treatment system unit remain below atmospheric pressure.

(f) Except for treatment processes complying with paragraph (d) of this section, the Administrator may request at any time an owner or operator demonstrate that a treatment process or wastewater treatment system unit meets the applicable requirements specified in paragraphs (a) or (b) of this section by conducting a performance test using the test methods and procedures as required in §61.355 of this subpart.

(g) The owner or operator of a treatment process or wastewater treatment system unit that is used to comply with the provisions of this section shall monitor the unit in accordance with the applicable requirements in §61.354 of this subpart.

[55 FR 8346, Mar. 7, 1990, as amended at 55 FR 37231, Sept. 10, 1990; 58 FR 3098, Jan. 7, 1993; 65 FR 62160, Oct. 17, 2000]

§ 61.349 Standards: Closed-vent systems and control devices.

(a) For each closed-vent system and control device used to comply with standards in accordance with §61.343 through 61.348 of this subpart, the owner or operator shall properly design, install, operate, and maintain the closed-vent system and control device in accordance with the following requirements:

(1) The closed-vent system shall:

(i) Be designed to operate with no detectable emissions as indicated by an instrument reading of less than 500 ppmv above background, as determined initially and thereafter at least once per year by the methods specified in §61.355(h) of this subpart.

(ii) Vent systems that contain any bypass line that could divert the vent stream away from a control device used to comply with the provisions of this subpart shall install, maintain, and operate according to the manufacturer's specifications a flow indicator that provides a record of vent stream flow away from the control device at least once every 15 minutes, except as provided in paragraph (a)(1)(ii)(B) of this section.

(A) The flow indicator shall be installed at the entrance to any bypass line that could divert the vent stream away from the control device to the atmosphere.

(B) Where the bypass line valve is secured in the closed position with a car-seal or a lock-and-key type configuration, a flow indicator is not required.

(iii) All gauging and sampling devices shall be gas-tight except when gauging or sampling is taking place.

(iv) For each closed-vent system complying with paragraph (a) of this section, one or more devices which vent directly to the atmosphere may be used on the closed-vent system provided each device remains in a closed, sealed position during normal operations except when the device needs to open to prevent physical damage or permanent deformation of the closed-vent system resulting from malfunction of the unit in accordance with good engineering and safety practices for handling flammable, explosive, or other hazardous materials.

(2) The control device shall be designed and operated in accordance with the following conditions:

(i) An enclosed combustion device (e.g., a vapor incinerator, boiler, or process heater) shall meet one of the following conditions:

(A) Reduce the organic emissions vented to it by 95 weight percent or greater;

(B) Achieve a total organic compound concentration of 20 ppmv (as the sum of the concentrations for individual compounds using Method 18) on a dry basis corrected to 3 percent oxygen; or

(C) Provide a minimum residence time of 0.5 seconds at a minimum temperature of 760°C 1,400°F). If a boiler or process heater issued as the control device, then the vent stream shall be introduced into the flame zone of the boiler or process heater.

(ii) A vapor recovery system (e.g., a carbon adsorption system or a condenser) shall recover or control the organic emissions vented to it with an efficiency of 95 weight percent or greater, or shall recover or control the benzene emissions vented to it with an efficiency of 98 weight percent or greater.

(iii) A flare shall comply with the requirements of 40 CFR 60.18.

(iv) A control device other than those described in paragraphs (a)(2) (i) through (iii) of this section may be used provided that the following conditions are met:

(A) The device shall recover or control the organic emissions vented to it with an efficiency of 95 weight percent or greater, or shall recover or control the benzene emissions vented to it with an efficiency of 98 weight percent or greater.

(B) The owner or operator shall develop test data and design information that documents the control device will achieve an emission control efficiency of either 95 percent or greater for organic compounds or 98 percent or greater for benzene.

(C) The owner or operator shall identify:

(1) The critical operating parameters that affect the emission control performance of the device;

(2) The range of values of these operating parameters that ensure the emission control efficiency specified in paragraph (a)(2)(iv)(A) of this section is maintained during operation of the device; and

(3) How these operating parameters will be monitored to ensure the proper operation and maintenance of the device.

(D) The owner or operator shall submit the information and data specified in paragraphs (a)(2)(iv) (B) and (C) of this section to the Administrator prior to operation of the alternative control device.

(E) The Administrator will determine, based on the information submitted under paragraph (a)(2)(iv)(D) of this section, if the control device subject to paragraph (a)(2)(iv) of this section meets the requirements of §61.349. The control device subject to paragraph (a)(2)(iv) of this section may be operated prior to receiving approval from the Administrator. However, if the Administrator determines that the control device does not meet the requirements of §61.349, the facility may be subject to enforcement action beginning from the time the control device began operation.

(b) Each closed-vent system and control device used to comply with this subpart shall be operated at all times when waste is placed in the waste management unit vented to the control device except when maintenance or repair of the waste management unit cannot be completed without a shutdown of the control device.

(c) An owner and operator shall demonstrate that each control device, except for a flare, achieves the appropriate conditions specified in paragraph (a)(2) of this section by using one of the following methods:

(1) Engineering calculations in accordance with requirements specified in §61.356(f) of this subpart; or

(2) Performance tests conducted using the test methods and procedures that meet the requirements specified in §61.355 of this subpart.

(d) An owner or operator shall demonstrate compliance of each flare in accordance with paragraph (a)(2)(iii) of this section.

(e) The Administrator may request at any time an owner or operator demonstrate that a control device meets the applicable conditions specified in paragraph (a)(2) of this section by conducting a performance test using the test methods and procedures as required in §61.355, and for control devices subject to paragraph (a)(2)(iv) of this section, the Administrator may specify alternative test

methods and procedures, as appropriate.

(f) Each closed-vent system and control device shall be visually inspected initially and quarterly thereafter. The visual inspection shall include inspection of ductwork and piping and connections to covers and control devices for evidence of visible defects such as holes in ductwork or piping and loose connections.

(g) Except as provided in §61.350 of this subpart, if visible defects are observed during an inspection, or if other problems are identified, or if detectable emissions are measured, a first effort to repair the closed-vent system and control device shall be made as soon as practicable but no later than 5 calendar days after detection. Repair shall be completed no later than 15 calendar days after the emissions are detected or the visible defect is observed.

(h) The owner or operator of a control device that is used to comply with the provisions of this section shall monitor the control device in accordance with §61.354(c) of this subpart.

[55 FR 8346, Mar. 7, 1990; 55 FR 12444, Apr. 3, 1990, as amended at 55 FR 37231, Sept. 10, 1990; 58 FR 3098, Jan. 7, 1993; 65 FR 62160, Oct. 17, 2000]

§ 61.350 Standards: Delay of repair.

(a) Delay of repair of facilities or units that are subject to the provisions of this subpart will be allowed if the repair is technically impossible without a complete or partial facility or unit shutdown.

(b) Repair of such equipment shall occur before the end of the next facility or unit shutdown.

§ 61.351 Alternative standards for tanks.

(a) As an alternative to the standards for tanks specified in §61.343 of this subpart, an owner or operator may elect to comply with one of the following:

(1) A fixed roof and internal floating roof meeting the requirements in 40 CFR 60.112b(a)(1);

(2) An external floating roof meeting the requirements of 40 CFR 60.112b (a)(2); or

(3) An alternative means of emission limitation as described in 40 CFR 60.114b.

(b) If an owner or operator elects to comply with the provisions of this section, then the owner or operator is exempt from the provisions of §61.343 of this subpart applicable to the same facilities.

[55 FR 8346, Mar. 7, 1990, as amended at 55 FR 37231, Sept. 10, 1990]

§ 61.352 Alternative standards for oil-water separators.

(a) As an alternative to the standards for oil-water separators specified in §61.347 of this subpart, an owner or operator may elect to comply with one of the following:

(1) A floating roof meeting the requirements in 40 CFR 60.693-2(a); or

(2) An alternative means of emission limitation as described in 40 CFR 60.694.

(b) For portions of the oil-water separator where it is infeasible to construct and operate a floating roof, such as over the weir mechanism, a fixed roof vented to a vapor control device that meets the requirements in §61.347 and 61.349 of this subpart shall be installed and operated.

(c) Except as provided in paragraph (b) of this section, if an owner or operator elects to comply with the provisions of this section, then the owner or operator is exempt from the provisions in §61.347 of this subpart applicable to the same facilities.

§ 61.353 Alternative means of emission limitation.

(a) If, in the Administrator's judgment, an alternative means of emission limitation will achieve a reduction in benzene emissions at least equivalent to the reduction in benzene emissions from the source achieved by the applicable design, equipment, work practice, or operational requirements in §61.342 through 61.349, the Administrator will publish in the Federal Register a notice permitting the use of the alternative means for purposes of compliance with that requirement. The notice may condition the permission on requirements related to the operation and maintenance of the alternative means.

(b) Any notice under paragraph (a) of this section shall be published only after public notice and an opportunity for a hearing.

(c) Any person seeking permission under this section shall collect, verify, and submit to the Administrator information showing that the alternative means achieves equivalent emission reductions.

[55 FR 8346, Mar. 7, 1990, as amended at 58 FR 3099, Jan. 7, 1993]

§ 61.354 Monitoring of operations.

(a) Except for a treatment process or waste stream complying with §61.348(d), the owner or operator shall monitor each treatment process or wastewater treatment system unit to ensure the unit is properly operated and maintained by one of the following monitoring procedures:

(1) Measure the benzene concentration of the waste stream exiting the treatment process complying with §61.348(a)(1)(i) at least once per month by collecting and analyzing one or more samples using the procedures specified in §61.355(c)(3).

(2) Install, calibrate, operate, and maintain according to manufacturer's specifications equipment to continuously monitor and record a process parameter (or parameters) for the treatment process or wastewater treatment system unit that indicates proper system operation. The owner or operator shall inspect at least once each operating day the data recorded by the monitoring equipment (e.g., temperature monitor or flow indicator) to ensure that the unit is operating properly.

(b) If an owner or operator complies with the requirements of §61.348(b), then the owner or operator shall monitor each wastewater treatment system to ensure the unit is properly operated and maintained by the appropriate monitoring procedure as follows:

(1) For the first exempt waste management unit in each waste treatment train, other than an enhanced biodegradation unit, measure the flow rate, using the procedures of §61.355(b), and the benzene concentration of each waste stream entering the unit at least once per month by collecting and analyzing one or more samples using the procedures specified in §61.355(c)(3).

(2) For each enhanced biodegradation unit that is the first exempt waste management unit in a treatment train, measure the benzene concentration of each waste stream entering the unit at least once per month by collecting and analyzing one or more samples using the procedures specified in §61.355(c)(3).

(c) An owner or operator subject to the requirements in §61.349 of this subpart shall install, calibrate, maintain, and operate according to the manufacturer's specifications a device to continuously monitor the control device operation as specified in the following paragraphs, unless alternative monitoring procedures or requirements are approved for that facility by the Administrator. The owner or operator shall inspect at least once each operating day the data recorded by the monitoring equipment (e.g., temperature monitor or flow indicator) to ensure that the control device is operating properly.

(1) For a thermal vapor incinerator, a temperature monitoring device equipped with a continuous recorder. The device shall have an accuracy of ±1 percent of the temperature being monitored in °C or ±0.5°C, whichever is greater. The temperature sensor shall be installed at a representative location in the combustion chamber.

(2) For a catalytic vapor incinerator, a temperature monitoring device equipped with a continuous recorder. The device shall be capable of monitoring temperature at two locations, and have an accuracy of ±1 percent of the temperature being monitored in °C or ±0.5°C, whichever is greater. One temperature sensor shall be installed in the vent stream at the nearest feasible point to the catalyst bed inlet and a second temperature sensor shall be installed in the vent stream at the nearest feasible point to the catalyst bed outlet.

(3) For a flare, a monitoring device in accordance with 40 CFR 60.18(f)(2) equipped with a continuous recorder.

(4) For a boiler or process heater having a design heat input capacity less than 44 MW (150×10^6 BTU/hr), a temperature monitoring device equipped with a continuous recorder. The device shall have an accuracy of ±1 percent of the temperature being monitored in °C or ±0.5°C, whichever is greater. The temperature sensor shall be installed at a representative location in the combustion chamber.

(5) For a boiler or process heater having a design heat input capacity greater than or equal to 44 MW (150 x 10^6 BTU/hr), a monitoring device equipped with a continuous recorder to measure a parameter(s) that indicates good combustion operating practices are being used.

(6) For a condenser, either:

(i) A monitoring device equipped with a continuous recorder to measure either the concentration level of the organic compounds or the concentration level of benzene in the exhaust vent stream from the condenser; or

(ii) A temperature monitoring device equipped with a continuous recorder. The device shall be capable of monitoring temperature at two locations, and have an accuracy of ±1 percent of the temperature being monitored in °C or ±0.5°C, whichever is greater. One temperature sensor shall be installed at a location in the exhaust stream from the condenser, and a second temperature sensor shall be installed at a location in the coolant fluid exiting the condenser.

(7) For a carbon adsorption system that regenerates the carbon bed directly in the control device such as a fixed-bed carbon adsorber, either:

(i) A monitoring device equipped with a continuous recorder to measure either the concentration level of the organic compounds or the benzene concentration level in the exhaust vent stream from the carbon bed; or

(ii) A monitoring device equipped with a continuous recorder to measure a parameter that indicates the carbon bed is regenerated on a regular, predetermined time cycle.

(8) For a vapor recovery system other than a condenser or carbon adsorption system, a monitoring device equipped with a continuous recorder to measure either the concentration level of the organic compounds or the benzene concentration level in the exhaust vent stream from the control device.

(9) For a control device subject to the requirements of §61.349(a)(2)(iv), devices to monitor the parameters as specified in §61.349(a)(2)(iv)(C).

(d) For a carbon adsorption system that does not regenerate the carbon bed directly on site in the control device (e.g., a carbon canister), either the concentration level of the organic compounds or the concentration level of benzene in the exhaust vent stream from the carbon adsorption system shall be monitored on a regular schedule, and the existing carbon shall be replaced with fresh carbon immediately when carbon breakthrough is indicated. The device shall be monitored on a daily basis or at intervals no greater than 20 percent of the design carbon replacement interval, whichever is greater. As an alternative to conducting this monitoring, an owner or operator may replace the carbon in the carbon adsorption system with fresh carbon at a regular predetermined time interval that is less than the carbon replacement interval that is determined by the maximum design flow rate and either the organic concentration or the benzene concentration in the gas stream vented to the carbon adsorption system.

(e) An alternative operation or process parameter may be monitored if it can be demonstrated that another parameter will ensure that the control device is operated in conformance with these standards and the control device's design specifications.

(f) Owners or operators using a closed-vent system that contains any bypass line that could divert a vent stream from a control device used to comply with the provisions of this subpart shall do the following:

(1) Visually inspect the bypass line valve at least once every month, checking the position of the valve and the condition of the car-seal or closure mechanism required under §61.349(a)(1)(ii) to ensure that the valve is maintained in the closed position and the vent stream is not diverted through the bypass line

(2) Visually inspect the readings from each flow monitoring device required by §61.349(a)(1)(ii) at least once each operating day to check that vapors are being routed to the control device as required.

(g) Each owner or operator who uses a system for emission control that is maintained at a pressure less than atmospheric pressure with openings to provide dilution air shall install, calibrate, maintain, and operate according to the manufacturer's specifications a device equipped with a continuous recorder to monitor the pressure in the unit to ensure that it is less than atmospheric pressure.

[55 FR 8346, Mar. 7, 1990, as amended at 58 FR 3099, Jan. 7, 1993; 65 FR 62160, Oct. 17, 2000]

§ 61.355 Test methods, procedures, and compliance provisions.

(a) An owner or operator shall determine the total annual benzene quantity from facility waste by the following procedure:

(1) For each waste stream subject to this subpart having a flow-weighted annual average water content greater than 10 percent water, on a volume basis as total water, or is mixed with water or other wastes at any time and the resulting mixture has an annual average water content greater than 10 percent as specified in §61.342(a), the owner or operator shall:

(i) Determine the annual waste quantity for each waste stream using the procedures specified in paragraph (b) of this section.

(ii) Determine the flow-weighted annual average benzene concentration for each waste stream using the procedures specified in paragraph (c) of this section

(iii) Calculate the annual benzene quantity for each waste stream by multiplying the annual waste quantity of the waste stream times the flow-weighted annual average benzene concentration.

(2) Total annual benzene quantity from facility waste is calculated by adding together the annual benzene quantity for each waste stream generated during the year and the annual benzene quantity for each process unit turnaround waste annualized according to paragraph (b)(4) of this section.

(3) If the total annual benzene quantity from facility waste is equal to or greater than 10 mg/yr (11 ton/yr), then the owner or operator shall comply with the requirements of §61.342 (c), (d), or (e).

(4) If the total annual benzene quantity from facility waste is less than 10 Mg/yr (11 ton/yr) but is equal to or greater than 1 Mg/yr (1.1 ton/yr), then the owner or operator shall:

(i) Comply with the recordkeeping requirements of §61.356 and reporting requirements of §61.357 of this subpart; and

(ii) Repeat the determination of total annual benzene quantity from facility waste at least once per year and whenever there is a change in the process generating the waste that could cause the total annual benzene quantity from facility waste to increase to 10 Mg/yr (11 ton/yr) or more.

(5) If the total annual benzene quantity from facility waste is less than 1 Mg/yr (1.1 ton/yr), then the owner or operator shall:

(i) Comply with the recordkeeping requirements of §61.356 and reporting requirements of §61.357 of this subpart; and

(ii) Repeat the determination of total annual benzene quantity from facility waste whenever there is a change in the process generating the waste that could cause the total annual benzene quantity from facility waste to increase to 1 Mg/yr (1.1 ton/yr) or more.

(6) The benzene quantity in a waste stream that is generated less than one time per year, except as provided for process unit turnaround waste in paragraph (b)(4) of this section, shall be included in the determination of total annual benzene quantity from facility waste for the year in which the waste is generated unless the waste stream is otherwise excluded from the determination of total annual benzene quantity from facility waste in accordance with paragraphs (a) through (c) of this section. The benzene quantity in this waste stream shall not be annualized or averaged over the time interval between the activities that resulted in generation of the waste, for purposes of determining the total annual benzene quantity from facility waste.

(b) For purposes of the calculation required by paragraph (a) of this section, an owner or operator shall determine the annual waste quantity at the point of waste generation, unless otherwise provided in paragraphs (b) (1), (2), (3), and (4) of this section, by one of the methods given in paragraphs (b) (5) through (7) of this section.

(1) The determination of annual waste quantity for sour water streams that are processed in sour water strippers shall be made at the point that the water exits the sour water stripper.

(2) The determination of annual waste quantity for wastes at coke by-product plants subject to and complying with the control requirements of §61.132, 61.133, 61.134, or 61.139 of

subpart L of this part shall be made at the location that the waste stream exits the process unit component or waste management unit controlled by that subpart or at the exit of the ammonia still, provided that the following conditions are met:

(i) The transfer of wastes between units complying with the control requirements of subpart L of this part, process units, and the ammonia still is made through hard piping or other enclosed system.

(ii) The ammonia still meets the definition of a sour water stripper in §61.341.

(3) The determination of annual waste quantity for wastes that are received at hazardous waste treatment, storage, or disposal facilities from offsite shall be made at the point where the waste enters the hazardous waste treatment, storage, or disposal facility.

(4) The determination of annual waste quantity for each process unit turnaround waste generated only at 2 year or greater intervals, may be made by dividing the total quantity of waste generated during the most recent process unit turnaround by the time period (in the nearest tenth of a year) between the turnaround resulting in generation of the waste and the most recent preceding process turnaround for the unit. The resulting annual waste quantity shall be included in the calculation of the annual benzene quantity as provided in paragraph (a)(1)(iii) of this section for the year in which the turnaround occurs and for each subsequent year until the unit undergoes the next process turnaround. For estimates of total annual benzene quantity as specified in the 90-day report, required under §61.357(a)(1), the owner or operator shall estimate the waste quantity generated during the most recent turnaround, and the time period between turnarounds in accordance with good engineering practices. If the owner or operator chooses not to annualize process unit turnaround waste, as specified in this paragraph, then the process unit turnaround waste quantity shall be included in the calculation of the annual benzene quantity for the year in which the turnaround occurs.

(5) Select the highest annual quantity of waste managed from historical records representing the most recent 5 years of operation or, if the facility has been in service for less than 5 years but at least 1 year, from historical records representing the total operating life of the facility;

(6) Use the maximum design capacity of the waste management unit; or

(7) Use measurements that are representative of maximum waste generation rates.

(c) For the purposes of the calculation required by §61.355(a) of this subpart, an owner or operator shall determine the flow-weighted annual average benzene concentration in a manner that meets the requirements given in paragraph (c)(1) of this section using either of the methods given in paragraphs (c)(2) and (c)(3) of this section.

(1) The determination of flow-weighted annual average benzene concentration shall meet all of the following criteria:

(i) The determination shall be made at the point of waste generation except for the specific cases given in paragraphs (c)(1)(i)(A) through (D) of this section.

(A) The determination for sour water streams that are processed in sour water strippers shall be made at the point that the water exits the sour water stripper.

(B) The determination for wastes at coke by-product plants subject to and complying with the control requirements of §61.132, 61.133, 61.134, or 61.139 of subpart L of this part shall be made at the location that the waste stream exits the process unit component or waste management unit controlled by that subpart or at the exit of the ammonia still, provided that the following conditions are met:

(1) The transfer of wastes between units complying with the control requirements of subpart L of this part, process units, and the ammonia still is made through hard piping or other enclosed system.

(2) The ammonia still meets the definition of a sour water stripper in §61.341.

(C) The determination for wastes that are received from offsite shall be made at the point where the waste enters the hazardous waste treatment, storage, or disposal facility.

(D) The determination of flow-weighted annual average benzene concentration for process unit turnaround waste shall be made using either of the methods given in paragraph (c)(2) or (c)(3) of this section. The resulting flow-weighted annual average benzene concentration shall be included in the calculation of annual benzene quantity as provided in paragraph (a)(1)(iii) of this section for the year in which the turnaround occurs and for each subsequent year until the unit undergoes the next process unit turnaround.

(ii) Volatilization of the benzene by exposure to air shall not be used in the determination to reduce the benzene concentration.

(iii) Mixing or diluting the waste stream with other wastes or other materials shall not be used in the determination-to reduce the benzene concentration.

(iv) The determination shall be made prior to any treatment of the waste that removes benzene, except as specified in paragraphs (c)(1)(i)(A) through (D) of this section.

(v) For wastes with multiple phases, the determination shall provide the weighted-average benzene concentration based on the benzene concentration in each phase of the waste and the relative proportion of the phases.

(2) Knowledge of the waste. The owner or operator shall provide sufficient information to document the flow-weighted annual average benzene concentration of each waste stream. Examples of information that could constitute knowledge include material balances, records of chemicals purchases, or previous test results provided the results are still relevant to the current waste stream conditions. If test data are used, then the owner or operator shall provide documentation describing the testing protocol and the means by which sampling variability and analytical variability were accounted for in the determination of the flow-weighted annual average benzene concentration for the waste stream. When an owner or operator and the Administrator do not agree on determinations of the flow-weighted annual average benzene concentration based on knowledge of the waste, the procedures under paragraph (c)(3) of this section shall be used to resolve the disagreement.

(3) Measurements of the benzene concentration in the waste stream in accordance with the following procedures:

(i) Collect a minimum of three representative samples from each waste stream. Where feasible, samples shall be taken from an enclosed pipe prior to the waste being exposed to the atmosphere.

(ii) For waste in enclosed pipes, the following procedures shall be used:

(A) Samples shall be collected prior to the waste being exposed to the atmosphere in order to minimize the loss of benzene prior to sampling.

(B) A static mixer shall be installed in the process line or in a by-pass line unless the owner or operator demonstrates that installation of a static mixer in the line is not necessary to accurately determine the benzene concentration of the waste stream.

(C) The sampling tap shall be located within two pipe diameters of the static mixer outlet.

(D) Prior to the initiation of sampling, sample lines and cooling coil shall be purged with at least four volumes of waste.

(E) After purging, the sample flow shall be directed to a sample container and the tip of the sampling tube shall be kept below the surface of the waste during sampling to minimize contact with the atmosphere.

(F) Samples shall be collected at a flow rate such that the cooling coil is able to maintain a waste temperature less than 10°C (50°F).

(G) After filling, the sample container shall be capped immediately (within 5 seconds) to leave a minimum headspace in the container.

(H) The sample containers shall immediately be cooled and maintained at a temperature below 10°C (50°F) for transfer to the laboratory.

(iii) When sampling from an enclosed pipe is not feasible, a minimum of three representative samples shall be collected in a manner to minimize exposure of the sample to the atmosphere and loss of benzene prior to sampling.

(iv) Each waste sample shall be analyzed using one of the following test methods for determining the benzene concentration in a waste stream:

(A) Method 8020, Aromatic Volatile Organics, in "Test Methods for Evaluating Solid Waste,

Physical/Chemical Methods," EPA Publication No. SW-846 (incorporation by reference as specified in §61.18 of this part);

(B) Method 8021, Volatile Organic Compounds in Water by Purge and Trap Capillary Column Gas Chromatography with Photoionization and Electrolytic Conductivity Detectors in Series in "Test Methods for Evaluating Solid Waste, Physical/Chemical Methods," EPA Publication No. SW-846 (incorporation by reference as specified in §61.18 of this part);

(C) Method 8240, Gas Chromatography/Mass Spectrometry for Volatile Organics in "Test Methods for Evaluating Solid Waste, Physical/Chemical Methods," EPA Publication No. SW-846 (incorporation by reference as specified in §61.18 of this part);

(D) Method 8260, Gas Chromatography/Mass Spectrometry for Volatile Organics: Capillary Column Technique in "Test Methods for Evaluating Solid Waste, Physical/Chemical Methods," EPA Publication No. SW-846 (incorporation by reference as specified in §61.18 of this part);

(E) Method 602, Purgeable Aromatics, as described in 40 CFR part 136, appendix A, Test Procedures for Analysis of Organic Pollutants, for wastewaters for which this is an approved EPA methods; or

(F) Method 624, Purgeables, as described in 40 CFR part 136, appendix A, Test Procedures for Analysis of Organic Pollutants, for wastewaters for which this is an approved EPA method.

(v) The flow-weighted annual average benzene concentration shall be calculated by averaging the results of the sample analyses as follows:

$$\overline{C} = \frac{1}{Q_t} x \sum_{i=1}^{n} (Q_i)(C_i)$$

Where:

C = Flow-weighted annual average benzene concentration for waste stream, ppmw.

Q_t = Total annual waste quantity for waste stream, kg/yr (lb/yr).

n = Number of waste samples (at least 3).

Q_i = Annual waste quantity for waste stream represented by C_i, kg/yr (lb/yr).

C_i = Measured concentration of benzene in waste sample i, ppmw.

(d) An owner or operator using performance tests to demonstrate compliance of a treatment process with §61.348 (a)(1)(i) shall measure the flow-weighted annual average benzene concentration of the waste stream exiting the treatment process by collecting and analyzing a minimum of three representative samples of the waste stream using the procedures in paragraph (c)(3) of this section. The test shall be conducted under conditions that exist when the treatment process is operating at the highest inlet waste stream flow rate and benzene content expected to occur. Operations during periods of startup, shutdown, and malfunction shall not constitute representative conditions for the purpose of a test. The owner or operator shall record all process information as is necessary to document the operating conditions during the test.

(e) An owner or operator using performance tests to demonstrate compliance of a treatment process with §61.348(a)(1)(ii) of this subpart shall determine the percent reduction of benzene in the waste stream on a mass basis by the following procedure:

(1) The test shall be conducted under conditions that exist when the treatment process is operating at the highest inlet waste stream flow rate and benzene content expected to occur. Operations during periods of startup, shutdown, and malfunction shall not constitute representative conditions for the purpose of a test. The owner or operator shall record all process information as is necessary to document the operating conditions during the test.

(2) All testing equipment shall be prepared and installed as specified in the appropriate test methods.

(3) The mass flow rate of benzene entering the treatment process (E_b) shall be determined by computing the product of the flow rate of the waste stream entering the treatment process, as determined by the inlet flow meter, and the benzene concentration of the waste stream, as determined using the sampling and analytical procedures specified in paragraph (c)(2) or (c)(3) of this section. Three grab samples of the waste shall be taken at equally spaced time intervals over a 1-hour period. Each 1-hour period constitutes a run, and the performance test shall consist of a minimum of 3 runs conducted over a 3-hour period. The mass flow rate of benzene entering the treatment process is calculated as follows:

$$E_b = \frac{K}{nx10^6}[\sum_{i=1}^{n} V_i C_i]$$

Where:

E_b = Mass flow rate of benzene entering the treatment process, kg/hr (lb/hr).

K = Density of the waste stream, kg/m^3 (lb/ft^3).

V_i = Average volume flow rate of waste entering the treatment process during each run i, m^3/hr (ft^3/hr).

C_i = Average concentration of benzene in the waste stream entering the treatment process during each run i, ppmw.

n = Number of runs.

10^6 = Conversion factor for ppmw.

(4) The mass flow rate of benzene exiting the treatment process (E_a) shall be determined by computing the product of the flow rate of the waste stream exiting the treatment process, as determined by the outlet flow meter or the inlet flow meter, and the benzene concentration of the waste stream, as determined using the sampling and analytical procedures specified in paragraph (c)(2) or (c)(3) of this section. Three grab samples of the waste shall be taken at equally spaced time intervals over a 1-hour period. Each 1-hour period constitutes a run, and the performance test shall consist of a minimum of 3 runs conducted over the same 3-hour period at which the mass flow rate of benzene entering the treatment process is determined. The mass flow rate of benzene exiting the treatment process is calculated as follows:

$$E_a = \frac{K}{nx10^6}[\sum_{i=1}^{n} V_i C_i]$$

Where:

E_a = Mass flow rate of benzene exiting the treatment process, kg/hr (lb/hr).

K = Density of the waste stream, kg/m^3 (lb/ft^3).

V_i = Average volume flow rate of waste exiting the treatment process during each run i, m^3/hr (ft^3/hr).

C_i = Average concentration of benzene in the waste stream exiting the treatment process during each run i, ppmw.

n = Number of runs.

10^6 = Conversion factor for ppmw.

(f) An owner or operator using performance tests to demonstrate compliance of a treatment process with §61.348(a)(1)(iii) of this subpart shall determine the benzene destruction efficiency for the combustion unit by the following procedure:

(1) The test shall be conducted under conditions that exist when the combustion unit is operating at the highest inlet waste stream flow rate and benzene content expected to occur. Operations during periods of startup, shutdown, and malfunction shall not constitute representative conditions for the purpose of a test. The owner or operator shall record all process information necessary to document the operating conditions during the test.

(2) All testing equipment shall be prepared and installed as specified in the appropriate test methods.

(3) The mass flow rate of benzene entering the combustion unit shall be determined by computing the product of the flow rate of the waste stream entering the combustion unit, as determined by the inlet flow meter, and the benzene concentration of the waste stream, as determined using the sampling procedures in paragraph (c)(2) or (c)(3) of this section. Three grab samples of the waste shall be taken at equally spaced time intervals over a 1-hour period. Each 1-hour period constitutes a run, and the performance test shall consist of a minimum of 3 runs conducted over a 3-hour period. The mass flow rate of benzene into the combustion unit is calculated as follows:

$$E_b = \frac{K}{nx10^6}[\sum_{i=1}^{n} V_i C_i]$$

Where:

E_b = Mass flow rate of benzene entering the

combustion unit, kg/hr (lb/hr).

K = Density of the waste stream, kg/m^3 (lb/ft^3).

V_i = Average volume flow rate of waste entering the combustion unit during each run i, m^3/hour (ft^3/hr).

C_i= Average concentration of benzene in the waste stream entering the combustion unit during each run i, ppmw.

n = Number of runs.

10^6 = Conversion factor for ppmw.

(4) The mass flow rate of benzene exiting the combustion unit exhaust stack shall be determined as follows:

(i) The time period for the test shall not be less than 3 hours during which at least 3 stack gas samples are collected and be the same time period at which the mass flow rate of benzene entering the treatment process is determined. Each sample shall be collected over a 1-hour period (e.g., in a tedlar bag) to represent a time-integrated composite sample and each 1-hour period shall correspond to the periods when the waste feed is sampled.

(ii) A run shall consist of a 1-hour period during the test. For each run:

(A) The reading from each measurement shall be recorded;

(B) The volume exhausted shall be determined using method 2, 2A, 2C, or 2D from appendix A of 40 CFR part 60, as appropriate.

(C) The average benzene concentration in the exhaust downstream of the combustion unit shall be determined using method 18 from appendix A of 40 CFR part 60.

(iii) The mass of benzene emitted during each run shall be calculated as follows:

$$M_i = D_b V C(10^{-6})$$

Where:

M_i = Mass of benzene emitted during run i, kg (lb).

V = Volume of air-vapor mixture exhausted at standard conditions, m^3 (ft^3).

C = Concentration of benzene measured in the exhaust, ppmv.

D_b = Density of benzene, 3.24 kg/m^3 (0.202 lb/ft^3).

10^6 = Conversion factor for ppmv.

(iv) The benzene mass emission rate in the exhaust shall be calculated as follows:

$$E_a = \frac{\sum_{i=1}^{n} M_i}{T}$$

Where:

E_a = Mass flow rate of benzene emitted from the combustion unit, kg/hr (lb/hr).

M_i = Mass of benzene emitted during run i, kg (lb).

T = Total time of all runs, hour.

n = Number of runs.

(5) The benzene destruction efficiency for the combustion unit shall be calculated as follows:

$$R = \frac{E_b - E_a}{E_b} x100$$

Where:

R = Benzene destruction efficiency for the combustion unit, percent.

E_b = Mass flow rate of benzene entering the combustion unit, kg/hr (lb/hr).

E_a = Mass flow of benzene emitted from the combustion unit, kg/hr (lb/hr).

(g) An owner or operator using performance tests to demonstrate compliance of a wastewater treatment system unit with §61.348(b) shall measure the flow-weighted annual average benzene concentration of the wastewater stream where the waste stream enters an exempt waste management unit by collecting and analyzing a minimum of three representative samples of the waste stream using the procedures in paragraph (c)(3) of this section. The test shall be conducted under conditions that exist when the wastewater treatment system is operating at the highest inlet wastewater stream flow rate and benzene content expected to occur. Operations during periods of startup, shutdown, and malfunction shall not constitute representative conditions for the purpose of a test. The owner or operator shall record all process information as is necessary to document the operating conditions during the test.

(h) An owner or operator shall test equipment for compliance with no detectable emissions as required in §61.343 through 61.347, and §61.349 of this subpart in accordance with the following requirements:

(1) Monitoring shall comply with method 21 from appendix A of 40 CFR part 60.

(2) The detection instrument shall meet the performance criteria of method 21.

(3) The instrument shall be calibrated before use on each day of its use by the procedures specified in method 21.

(4) Calibration gases shall be:

(i) Zero air (less than 10 ppm of hydrocarbon in air); and

(ii) A mixture of methane or n-hexane and air at a concentration of approximately, but less than, 10,000 ppm methane or n-hexane.

(5) The background level shall be determined as set forth in method 21.

(6) The instrument probe shall be traversed around all potential leak interfaces as close as possible to the interface as described in method 21.

(7) The arithmetic difference between the maximum concentration indicated by the instrument and the background level is compared to 500 ppm for determining compliance.

(i) An owner or operator using a performance test to demonstrate compliance of a control device with either the organic reduction efficiency requirement or the benzene reduction efficiency requirement specified under §61.349(a)(2) shall use the following procedures:

(1) The test shall be conducted under conditions that exist when the waste management unit vented to the control device is operating at the highest load or capacity level expected to occur. Operations during periods of startup, shutdown, and malfunction shall not constitute representative conditions for the purpose of a test. The owner or operator shall record all process information necessary to document the operating conditions during the test.

(2) Sampling sites shall be selected using method 1 or 1A from appendix A of 40 CFR part 60, as appropriate.

(3) The mass flow rate of either the organics or benzene entering and exiting the control device shall be determined as follows:

(i) The time period for the test shall not be less than 3 hours during which at least 3 stack gas samples are collected. Samples of the vent stream entering and exiting the control device shall be collected during the same time period. Each sample shall be collected over a 1-hour period (e.g., in a tedlar bag) to represent a time-integrated composite sample.

(ii) A run shall consist of a 1-hour period during the test. For each run:

(A) The reading from each measurement shall be recorded;

(B) The volume exhausted shall be determined using method 2, 2A, 2C, or 2D from appendix A of 40 CFR part 60, as appropriate;

(C) The organic concentration or the benzene concentration, as appropriate, in the vent stream entering and exiting the control shall be determined using Method 18 from Appendix A of 40 CFR part 60.

(iii) The mass of organics or benzene entering and exiting the control device during each run shall be calculated as follows:

$$M_{aj} = KV_{aj}[\sum_{i=1}^{n} C_{ai} MW_i](10^{-6})$$

$$M_{bj} = KV_{bj}[\sum_{i=1}^{n} C_{bi} MW_i](10^{-6})$$

Where:

M_{aj} = Mass of organics or benzene in the vent stream entering the control device during run j, kg (lb).

M_{bj} = Mass of organics or benzene in the vent stream exiting the control device during run j, kg (lb).

V_{aj} = Volume of vent stream entering the control device during run j, at standard conditions, m^3 (ft^3).

V_{bj} = Volume of vent stream exiting the control device during run j, at standard conditions, m^3 (ft^3).

C_{ai} = Organic concentration of compound i or the benzene concentration measured in the vent stream entering the control device as determined by Method 18, ppm by volume on

a dry basis.

C_{bi} = Organic concentration of compound i or the benzene concentration measured in the vent stream exiting the control device as determined by Method 18, ppm by volume on a dry basis.

MW_i = Molecular weight of organic compound i in the vent stream, or the molecular weight of benzene, kg/kg-mol (lb/lb-mol).

n = Number of organic compounds in the vent stream; if benzene reduction efficiency is being demonstrated, then n=1.

K = Conversion factor for molar volume at standard conditions (293°K and 760 mm Hg (527°R and 14.7 psia)).

10^{-6} = Conversion factor for ppmv.

(iv) The mass flow rate of organics or benzene entering and exiting the control device shall be calculated as follows:

$$E_a = \frac{\sum_{j=1}^{n} M_{aj}}{T}$$

$$E_b = \frac{\sum_{j=1}^{n} M_{bj}}{T}$$

Where:

E_a = Mass flow rate of organics or benzene entering the control device, kg/hr (lb/hr).

E_b = Mass flow rate of organics or benzene exiting the control device, kg/hr (lb/hr).

M_{aj} = Mass of organics or benzene in the vent stream entering the control device during run j, kg (lb).

M_{bj} = Mass of organics or benzene in vent stream exiting the control device during run j, kg (lb).

T = Total time of all runs, hr.

n = Number of runs.

(4) The organic reduction efficiency or the benzene reduction efficiency for the control device shall be calculated as follows:

$$R = \frac{E_a - E_b}{E_a} x100$$

Where:

R = Total organic reduction efficiency or benzene reduction efficiency for the control device, percent.

E_a = Mass flow rate of organics or benzene entering the control device, kg/hr (lb/hr).

E_b = Mass flow rate of organics or benzene emitted from the control device, kg/hr (lb/hr).

(j) An owner or operator shall determine the benzene quantity for the purposes of the calculation required by §61.342 (c)(3)(ii)(B) according to the provisions of paragraph (a) of this section, except that the procedures in paragraph (a) of this section shall also apply to wastes with a water content of 10 percent or less.

(k) An owner or operator shall determine the benzene quantity for the purposes of the calculation required by §61.342(e)(2) by the following procedure:

(1) For each waste stream that is not controlled for air emissions in accordance with §§61.343, 61.344, 61.345, 61.346, 61.347, or 61.348(a), as applicable to the waste management unit that manages the waste, the benzene quantity shall be determined as specified in paragraph (a) of this section, except that paragraph (b)(4) of this section shall not apply, i.e., the waste quantity for process unit turnaround waste is not annualized but shall be included in the determination of benzene quantity for the year in which the waste is generated for the purposes of the calculation required by §61.342(e)(2).

(2) For each waste stream that is controlled for air emissions in accordance with §§61.343. 61.344, 61.345, 61.346, 61.347, or 61.348(a), as applicable to the waste management unit that manages the waste, the determination of annual waste quantity and flow-weighted annual average benzene concentration shall be made at the first applicable location as described in paragraphs (k)(2)(i), (k)(2)(ii), and (k)(2)(iii) of this section and prior to any reduction of benzene concentration through volatilization of the benzene, using the methods given in (k)(2)(iv) and (k)(2)(v) of this section.

(i) Where the waste stream enters the first waste management unit not complying with §§61.343, 61.344, 61.345, 61.346, 61.347, and 61.348(a) that are applicable to the waste management unit,

(ii) For each waste stream that is managed or treated only in compliance with §§61.343 through 61.348(a) up to the point of final direct discharge from the facility, the determination of benzene quantity shall be prior to any reduction of benzene concentration through volatilization of the benzene, or

(iii) For wastes managed in units controlled for air emissions in accordance with §§61.343, 61.344, 61.345, 61.346, 61.347, and 61.348(a), and then transferred offsite, facilities shall use the first applicable offsite location as described in paragraphs (k)(2)(i) and (k)(2)(ii) of this section if they have documentation from the offsite facility of the benzene quantity at this location. Facilities without this documentation for offsite wastes shall use the benzene quantity determined at the point where the transferred waste leaves the facility.

(iv) Annual waste quantity shall be determined using the procedures in paragraphs (b)(5), (6), or (7) of this section, and

(v) The flow-weighted annual average benzene concentration shall be determined using the procedures in paragraphs (c)(2) or (3) of this section.

(3) The benzene quantity in a waste stream that is generated less than one time per year, including process unit turnaround waste, shall be included in the determination of benzene quantity as determined in paragraph (k)(6) of this section for the year in which the waste is generated. The benzene quantity in this waste stream shall not be annualized or averaged over the time interval between the activities that resulted in generation of the waste for purposes of determining benzene quantity as determined in paragraph (k)(6) of this section.

(4) The benzene in waste entering an enhanced biodegradation unit, as defined in §61.348(b)(2)(ii)(B), shall not be included in the determination of benzene quantity, determined in paragraph (k)(6) of this section, if the following conditions are met:

(i) The benzene concentration for each waste stream entering the enhanced biodegradation unit is less than 10 ppmw on a flow-weighted annual average basis, and

(ii) All prior waste management units managing the waste comply with §§61.343, 61.344, 61.345, 61.346, 61.347 and 61.348(a).

(5) The benzene quantity for each waste stream in paragraph (k)(2) of this section shall be determined by multiplying the annual waste quantity of each waste stream times its flow-weighted annual average benzene concentration.

(6) The total benzene quantity for the purposes of the calculation required by §61.342(e)(2) shall be determined by adding together the benzene quantities determined in paragraphs (k)(1) and (k)(5) of this section for each applicable waste stream.

(7) If the benzene quantity determined in paragraph (6) of this section exceeds 6.0 Mg/yr only because of multiple counting of the benzene quantity for a waste stream, the owner or operator may use the following procedures for the purposes of the calculation required by §61.342(e)(2):

(i) Determine which waste management units are involved in the multiple counting of benzene;

(ii) Determine the quantity of benzene that is emitted, recovered, or removed from the affected units identified in paragraph (k)(7)(i) of this section, or destroyed in the units if applicable, using either direct measurements or the best available estimation techniques developed or approved by the Administrator.

(iii) Adjust the benzene quantity to eliminate the multiple counting of benzene based on the results from paragraph (k)(7)(ii) of this section and determine the total benzene quantity for the purposes of the calculation required by §61.342(e)(2).

(iv) Submit in the annual report required under §61.357(a) a description of the methods used and the resulting calculations for the alternative procedure under paragraph (k)(7) of this section, the benzene quantity determination from paragraph (k)(6) of this section, and the adjusted benzene quantity determination from paragraph (k)(7)(iii) of this section.

[55 FR 8346, Mar. 7, 1990; 55 FR 12444, Apr. 3, 1990, as amended at 55 FR 37231, Sept. 10, 1990; 58 FR 3099, Jan. 7, 1993; 65 FR 62160, 62161, Oct. 17, 2000]

§ 61.356 Recordkeeping requirements.

(a) Each owner or operator of a facility subject to the provisions of this subpart shall comply with the recordkeeping requirements of this section. Each record shall be maintained in a readily accessible location at the facility site for a period not less than two years from the date the information is recorded unless otherwise specified.

(b) Each owner or operator shall maintain records that identify each waste stream at the facility subject to this subpart, and indicate whether or not the waste stream is controlled for benzene emissions in accordance with this subpart. In addition the owner or operator shall maintain the following records:

(1) For each waste stream not controlled for benzene emissions in accordance with this subpart, the records shall include all test results, measurements, calculations, and other documentation used to determine the following information for the waste stream: waste stream identification, water content, whether or not the waste stream is a process wastewater stream, annual waste quantity, range of benzene concentrations, annual average flow-weighted benzene concentration, and annual benzene quantity.

(2) For each waste stream exempt from §61.342(c)(1) in accordance with §61.342(c)(3), the records shall include:

(i) All measurements, calculations, and other documentation used to determine that the continuous flow of process wastewater is less than 0.02 liters (0.005 gallons) per minute or the annual waste quantity of process wastewater is less than 10 Mg/yr (11 ton/yr) in accordance with §61.342(c)(3)(i), or

(ii) All measurements, calculations, and other documentation used to determine that the sum of the total annual benzene quantity in all exempt waste streams does not exceed 2.0 Mg/yr (2.2 ton/yr) in accordance with §61.342(c)(3)(ii).

(3) For each facility where process wastewater streams are controlled for benzene emissions in accordance with §61.342(d) of this subpart, the records shall include for each treated process wastewater stream all measurements, calculations, and other documentation used to determine the annual benzene quantity in the process wastewater stream exiting the treatment process.

(4) For each facility where waste streams are controlled for benzene emissions in accordance with §61.342(e), the records shall include for each waste stream all measurements, including the locations of the measurements, calculations, and other documentation used to determine that the total benzene quantity does not exceed 6.0 Mg/yr (6.6 ton/yr).

(5) For each facility where the annual waste quantity for process unit turnaround waste is determined in accordance with §61.355(b)(5), the records shall include all test results, measurements, calculations, and other documentation used to determine the following information: identification of each process unit at the facility that undergoes turnarounds, the date of the most recent turnaround for each process unit, identification of each process unit turnaround waste, the water content of each process unit turnaround waste, the annual waste quantity determined in accordance with §61.355(b)(5), the range of benzene concentrations in the waste, the annual average flow-weighted benzene concentration of the waste, and the annual benzene quantity calculated in accordance with §61.355(a)(1)(iii) of this section.

(6) For each facility where wastewater streams are controlled for benzene emissions in accordance with §61.348(b)(2), the records shall include all measurements, calculations, and other documentation used to determine the annual benzene content of the waste streams and the total annual benzene quantity contained in all waste streams managed or treated in exempt waste management units.

(c) An owner or operator transferring waste off-site to another facility for treatment in accordance with §61.342(f) shall maintain documentation for each offsite waste shipment that includes the following information: Date waste is shipped offsite, quantity of waste shipped offsite, name and address of the facility receiving the waste, and a copy of the notice sent with the waste shipment.

(d) An owner or operator using control equipment in accordance with §§61.343 through 61.347 shall maintain engineering design documentation for all control equipment that is installed on the waste management unit. The documentation shall be retained for the life of the control equipment. If a control device is used, then the owner or operator shall maintain the control device records required by paragraph (f) of this section.

(e) An owner or operator using a treatment process or wastewater treatment system unit in accordance with §61.348 of this subpart shall maintain the following records. The documentation shall be retained for the life of the unit.

(1) A statement signed and dated by the owner or operator certifying that the unit is designed to operate at the documented performance level when the waste stream entering the unit is at the highest waste stream flow rate and benzene content expected to occur.

(2) If engineering calculations are used to determine treatment process or wastewater treatment system unit performance, then the owner or operator shall maintain the complete design analysis for the unit. The design analysis shall include for example the following information: Design specifications, drawings, schematics, piping and instrumentation diagrams, and other documentation necessary to demonstrate the unit performance.

(3) If performance tests are used to determine treatment process or wastewater treatment system unit performance, then the owner or operator shall maintain all test information necessary to demonstrate the unit performance.

(i) A description of the unit including the following information: type of treatment process; manufacturer name and model number; and for each waste stream entering and exiting the unit, the waste stream type (e.g., process wastewater, sludge, slurry, etc.), and the design flow rate and benzene content.

(ii) Documentation describing the test protocol and the means by which sampling variability and analytical variability were accounted for in the determination of the unit performance. The description of the test protocol shall include the following information: sampling locations, sampling method, sampling frequency, and analytical procedures used for sample analysis.

(iii) Records of unit operating conditions during each test run including all key process parameters.

(iv) All test results.

(4) If a control device is used, then the owner or operator shall maintain the control device records required by paragraph (f) of this section.

(f) An owner or operator using a closed-vent system and control device in accordance with §61.349 of this subpart shall maintain the following records. The documentation shall be retained for the life of the control device.

(1) A statement signed and dated by the owner or operator certifying that the closed-vent system and control device is designed to operate at the documented performance level when the waste management unit vented to the control device is or would be operating at the highest load or capacity expected to occur.

(2) If engineering calculations are used to determine control device performance in accordance with §61.349(c), then a design analysis for the control device that includes for example:

(i) Specifications, drawings, schematics, and piping and instrumentation diagrams prepared by the owner or operator, or the control device manufacturer or vendor that describe the control device design based on acceptable engineering texts. The design analysis shall address the following vent stream characteristics and control device operating parameters:

(A) For a thermal vapor incinerator, the design analysis shall consider the vent stream composition, constituent concentrations, and flow rate. The design analysis shall also establish the design minimum and average temperature in the combustion zone and the combustion zone residence time.

(B) For a catalytic vapor incinerator, the design analysis shall consider the vent stream

composition, constituent concentrations, and flow rate. The design analysis shall also establish the design minimum and average temperatures across the catalyst bed inlet and outlet.

(C) For a boiler or process heater, the design analysis shall consider the vent stream composition, constituent concentrations, and flow rate. The design analysis shall also establish the design minimum and average flame zone temperatures, combustion zone residence time, and description of method and location where the vent stream is introduced into the flame zone.

(D) For a flare, the design analysis shall consider the vent stream composition, constituent concentrations, and flow rate. The design analysis shall also consider the requirements specified in 40 CFR 60.18.

(E) For a condenser, the design analysis shall consider the vent stream composition, constituent concentration, flow rate, relative humidity, and temperature. The design analysis shall also establish the design outlet organic compound concentration level or the design outlet benzene concentration level, design average temperature of the condenser exhaust vent stream, and the design average temperatures of the coolant fluid at the condenser inlet and outlet.

(F) For a carbon adsorption system that regenerates the carbon bed directly on-site in the control device such as a fixed-bed adsorber, the design analysis shall consider the vent stream composition, constituent concentration, flow rate, relative humidity, and temperature. The design analysis shall also establish the design exhaust vent stream organic compound concentration level or the design exhaust vent stream benzene concentration level, number and capacity of carbon beds, type and working capacity of activated carbon used for carbon beds, design total steam flow over the period of each complete carbon bed regeneration cycle, duration of the carbon bed steaming and cooling/drying cycles, design carbon bed temperature after regeneration, design carbon bed regeneration time, and design service life of carbon.

(G) For a carbon adsorption system that does not regenerate the carbon bed directly on-site in the control device, such as a carbon canister, the design analysis shall consider the vent stream composition, constituent concentration, flow rate, relative humidity, and temperature. The design analysis shall also establish the design exhaust vent stream organic compound concentration level or the design exhaust vent stream benzene concentration level, capacity of carbon bed, type and working capacity of activated carbon used for carbon bed, and design carbon replacement interval based on the total carbon working capacity of the control device and source operating schedule.

(H) For a control device subject to the requirements of §61.349(a)(2)(iv), the design analysis shall consider the vent stream composition, constituent concentration, and flow rate. The design analysis shall also include all of the information submitted under §61.349 (a)(2)(iv).

(ii) [Reserved]

(3) If performance tests are used to determine control device performance in accordance with §61.349(c) of this subpart:

(i) A description of how it is determined that the test is conducted when the waste management unit or treatment process is operating at the highest load or capacity level. This description shall include the estimated or design flow rate and organic content of each vent stream and definition of the acceptable operating ranges of key process and control parameters during the test program.

(ii) A description of the control device including the type of control device, control device manufacturer's name and model number, control device dimensions, capacity, and construction materials.

(iii) A detailed description of sampling and monitoring procedures, including sampling and monitoring locations in the system, the equipment to be used, sampling and monitoring frequency, and planned analytical procedures for sample analysis.

(iv) All test results.

(g) An owner or operator shall maintain a record for each visual inspection required by §§61.343 through 61.347 of this subpart that identifies a problem (such as a broken seal, gap or other problem) which could result in benzene emissions. The record shall include the date of the inspection, waste management unit and control equipment location where the problem is identified, a description of the problem, a description of the corrective action taken, and the date the corrective action was completed.

(h) An owner or operator shall maintain a record for each test of no detectable emissions required by §§61.343 through 61.347 and §61.349 of this subpart. The record shall include the following information: date the test is performed, background level measured during test, and maximum concentration indicated by the instrument reading measured for each potential leak interface. If detectable emissions are measured at a leak interface, then the record shall also include the waste management unit, control equipment, and leak interface location where detectable emissions were measured, a description of the problem, a description of the corrective action taken, and the date the corrective action was completed.

(i) For each treatment process and wastewater treatment system unit operated to comply with §61.348, the owner or operator shall maintain documentation that includes the following information regarding the unit operation:

(1) Dates of startup and shutdown of the unit.

(2) If measurements of waste stream benzene concentration are performed in accordance with §61.354(a)(1) of this subpart, the owner or operator shall maintain records that include date each test is performed and all test results.

(3) If a process parameter is continuously monitored in accordance with §61.354(a)(2) of this subpart, the owner or operator shall maintain records that include a description of the operating parameter (or parameters) to be monitored to ensure that the unit will be operated in conformance with these standards and the unit's design specifications, and an explanation of the criteria used for selection of that parameter (or parameters). This documentation shall be kept for the life of the unit.

(4) If measurements of waste stream benzene concentration are performed in accordance with §61.354(b), the owner or operator shall maintain records that include the date each test is performed and all test results.

(5) Periods when the unit is not operated as designed.

(j) For each control device, the owner or operator shall maintain documentation that includes the following information regarding the control device operation:

(1) Dates of startup and shutdown of the closed-vent system and control device.

(2) A description of the operating parameter (or parameters) to be monitored to ensure that the control device will be operated in conformance with these standards and the control device's design specifications and an explanation of the criteria used for selection of that parameter (or parameters). This documentation shall be kept for the life of the control device.

(3) Periods when the closed-vent system and control device are not operated as designed including all periods and the duration when:

(i) Any valve car-seal or closure mechanism required under §61.349(a)(1)(ii) is broken or the by-pass line valve position has changed.

(ii) The flow monitoring devices required under §61.349(a)(1)(ii) indicate that vapors are not routed to the control device as required.

(4) If a thermal vapor incinerator is used, then the owner or operator shall maintain continuous records of the temperature of the gas stream in the combustion zone of the incinerator and records of all 3-hour periods of operation during which the average temperature of the gas stream in the combustion zone is more than 28°C (50°F) below the design combustion zone temperature.

(5) If a catalytic vapor incinerator is used, then the owner or operator shall maintain continuous records of the temperature of the gas stream both upstream and downstream of the catalyst bed of the incinerator, records of all 3-hour periods of operation during which the average temperature measured before the catalyst bed is more than 28°C (50°F) below the design gas stream temperature, and records of all 3-hour periods of operation during which the average temperature difference across the catalyst bed is less than 80 percent of the

design temperature difference.

(6) If a boiler or process heater is used, then the owner or operator shall maintain records of each occurrence when there is a change in the location at which the vent stream is introduced into the flame zone as required by §61.349(a)(2)(i)(C). For a boiler or process heater having a design heat input capacity less than 44 MW (150 x 10^6 BTU/hr), the owner or operator shall maintain continuous records of the temperature of the gas stream in the combustion zone of the boiler or process heater and records of all 3-hour periods of operation during which the average temperature of the gas stream in the combustion zone is more than 28°C (50°F) below the design combustion zone temperature. For a boiler or process heater having a design heat input capacity greater than or equal to 44 MW (150 x 10^6 BTU/hr), the owner or operator shall maintain continuous records of the parameter(s) monitored in accordance with the requirements of §61.354(c)(5).

(7) If a flare is used, then the owner or operator shall maintain continuous records of the flare pilot flame monitoring and records of all periods during which the pilot flame is absent.

(8) If a condenser is used, then the owner or operator shall maintain records from the monitoring device of the parameters selected to be monitored in accordance with §61.354(c)(6). If concentration of organics or concentration of benzene in the control device outlet gas stream is monitored, then the owner or operator shall record all 3-hour periods of operation during which the concentration of organics or the concentration of benzene in the exhaust stream is more than 20 percent greater than the design value. If the temperature of the condenser exhaust stream and coolant fluid is monitored, then the owner or operator shall record all 3-hour periods of operation during which the temperature of the condenser exhaust vent stream is more than 6°C (11°F) above the design average exhaust vent stream temperature, or the temperature of the coolant fluid exiting the condenser is more than 6°C (11°F) above the design average coolant fluid temperature at the condenser outlet.

(9) If a carbon adsorber is used, then the owner or operator shall maintain records from the monitoring device of the concentration of organics or the concentration of benzene in the control device outlet gas stream. If the concentration of organics or the concentration of benzene in the control device outlet gas stream is monitored, then the owner or operator shall record all 3-hour periods of operation during which the concentration of organics or the concentration of benzene in the exhaust stream is more than 20 percent greater than the design value. If the carbon bed regeneration interval is monitored, then the owner or operator shall record each occurrence when the vent stream continues to flow through the control device beyond the predetermined carbon bed regeneration time.

(10) If a carbon adsorber that is not regenerated directly on site in the control device is used, then the owner or operator shall maintain records of dates and times when the control device is monitored, when breakthrough is measured, and shall record the date and time then the existing carbon in the control device is replaced with fresh carbon.

(11) If an alternative operational or process parameter is monitored for a control device, as allowed in §61.354(e) of this subpart, then the owner or operator shall maintain records of the continuously monitored parameter, including periods when the device is not operated as designed.

(12) If a control device subject to the requirements of §61.349(a)(2)(iv) is used, then the owner or operator shall maintain records of the parameters that are monitored and each occurrence when the parameters monitored are outside the range of values specified in §61.349(a)(2)(iv)(C), or other records as specified by the Administrator.

(k) An owner or operator who elects to install and operate the control equipment in §61.351 of this subpart shall comply with the recordkeeping requirements in 40 CFR 60.115b.

(l) An owner or operator who elects to install and operate the control equipment in §61.352 of this subpart shall maintain records of the following:

(1) The date, location, and corrective action for each visual inspection required by 40 CFR 60.693-2(a)(5), during which a broken seal, gap, or other problem is identified that could result in benzene emissions.

(2) Results of the seal gap measurements required by 40 CFR 60.693-2(a).

(m) If a system is used for emission control that is maintained at a pressure less than atmospheric pressure with openings to provide dilution air, then the owner or operator shall maintain records of the monitoring device and records of all periods during which the pressure in the unit is operated at a pressure that is equal to or greater than atmospheric pressure.

(n) Each owner or operator using a total enclosure to comply with control requirements for tanks in §61.343 or the control requirements for containers in §61.345 must keep the records required in paragraphs (n)(1) and (2) of this section. Owners or operators may use records as required in 40 CFR 264.1089(b)(2)(iv) or 40 CFR 265.1090(b)(2)(iv) for a tank or as required in 40 CFR 264.1089(d)(1) or 40 CFR 265.1090(d)(1) for a container to meet the recordkeeping requirement in paragraph (n)(1) of this section. The owner or operator must make the records of each verification of a total enclosure available for inspection upon request.

(1) Records of the most recent set of calculations and measurements performed to verify that the enclosure meets the criteria of a permanent total enclosure as specified in "Procedure T – Criteria for and Verification of a Permanent or Temporary Total Enclosure" in 40 CFR 52.741, appendix B;

(2) Records required for a closed-vent system and control device according to the requirements in paragraphs (d) (f), and (j) of this section.

[55 FR 8346, Mar. 7, 1990; 55 FR 12444, Apr. 3, 1990; 55 FR 18331, May 2, 1990, as amended at 58 FR 3103, Jan. 7, 1993; 65 FR 62161, Oct. 17, 2000; 67 FR 68533, Nov. 12, 2002]

§ 61.357 Reporting requirements.

(a) Each owner or operator of a chemical plant, petroleum refinery, coke by-product recovery plant, and any facility managing wastes from these industries shall submit to the Administrator within 90 days after January 7, 1993, or by the initial startup for a new source with an initial startup after the effective date, a report that summarizes the regulatory status of each waste stream subject to §61.342 and is determined by the procedures specified in §61.355(c) to contain benzene. Each owner or operator subject to this subpart who has no benzene onsite in wastes, products, by-products, or intermediates shall submit an initial report that is a statement to this effect. For all other owners or operators subject to this subpart, the report shall include the following information:

(1) Total annual benzene quantity from facility waste determined in accordance with §61.355(a) of this subpart.

(2) A table identifying each waste stream and whether or not the waste stream will be controlled for benzene emissions in accordance with the requirements of this subpart.

(3) For each waste stream identified as not being controlled for benzene emissions in accordance with the requirements of this subpart the following information shall be added to the table:

(i) Whether or not the water content of the waste stream is greater than 10 percent;

(ii) Whether or not the waste stream is a process wastewater stream, product tank drawdown, or landfill leachate;

(iii) Annual waste quantity for the waste stream;

(iv) Range of benzene concentrations for the waste stream;

(v) Annual average flow-weighted benzene concentration for the waste stream; and

(vi) Annual benzene quantity for the waste stream.

(4) The information required in paragraphs (a) (1), (2), and (3) of this section should represent the waste stream characteristics based on current configuration and operating conditions. An owner or operator only needs to list in the report those waste streams that contact materials containing benzene. The report does not need to include a description of the controls to be installed to comply with the

standard or other information required in §61.10(a).

(b) If the total annual benzene quantity from facility waste is less than 1 Mg/yr (1.1 ton/yr), then the owner or operator shall submit to the Administrator a report that updates the information listed in paragraphs (a)(1) through (a)(3) of this section whenever there is a change in the process generating the waste stream that could cause the total annual benzene quantity from facility waste to increase to 1 Mg/yr (1.1 ton/yr) or more.

(c) If the total annual benzene quantity from facility waste is less than 10 Mg/yr (11 ton/yr) but is equal to or greater than 1 Mg/yr (1.1 ton/yr), then the owner or operator shall submit to the Administrator a report that updates the information listed in paragraphs (a)(1) through (a)(3) of this section. The report shall be submitted annually and whenever there is a change in the process generating the waste stream that could cause the total annual benzene quantity from facility waste to increase to 10 Mg/yr (11 ton/yr) or more. If the information in the annual report required by paragraphs (a)(1) through (a)(3) of this section is not changed in the following year, the owner or operator may submit a statement to that effect.

(d) If the total annual benzene quantity from facility waste is equal to or greater than 10 Mg/yr (11 ton/yr), then the owner or operator shall submit to the Administrator the following reports:

(1) Within 90 days after January 7, 1993, unless a waiver of compliance under §61.11 of this part is granted, or by the date of initial startup for a new source with an initial startup after the effective date, a certification that the equipment necessary to comply with these standards has been installed and that the required initial inspections or tests have been carried out in accordance with this subpart. If a waiver of compliance is granted under §61.11, the certification of equipment necessary to comply with these standards shall be submitted by the date the waiver of compliance expires.

(2) Beginning on the date that the equipment necessary to comply with these standards has been certified in accordance with paragraph (d)(1) of this section, the owner or operator shall submit annually to the Administrator a report that updates the information listed in paragraphs (a)(1) through (a)(3) of this section. If the information in the annual report required by paragraphs (a)(1) through (a)(3) of this section is not changed in the following year, the owner or operator may submit a statement to that effect.

(3) If an owner or operator elects to comply with the requirements of §61.342(c)(3)(ii), then the report required by paragraph (d)(2) of this section shall include a table identifying each waste stream chosen for exemption and the total annual benzene quantity in these exempted streams.

(4) If an owner or operator elects to comply with the alternative requirements of §61.342(d) of this subpart, then he shall include in the report required by paragraph (d)(2) of this section a table presenting the following information for each process wastewater stream:

(i) Whether or not the process wastewater stream is being controlled for benzene emissions in accordance with the requirements of this subpart;

(ii) For each process wastewater stream identified as not being controlled for benzene emissions in accordance with the requirements of this subpart, the table shall report the following information for the process wastewater stream as determined at the point of waste generation: annual waste quantity, range of benzene concentrations, annual average flow-weighted benzene concentration, and annual benzene quantity;

(iii) For each process wastewater stream identified as being controlled for benzene emissions in accordance with the requirements of this subpart, the table shall report the following information for the process wastewater stream as determined at the exit to the treatment process: Annual waste quantity, range of benzene concentrations, annual average flow-weighted benzene concentration, and annual benzene quantity.

(5) If an owner or operator elects to comply with the alternative requirements of §61.342(e), then the report required by paragraph (d)(2) of this section shall include a table presenting the following information for each waste stream:

(i) For each waste stream identified as not being controlled for benzene emissions in accordance with the requirements of this subpart; the table shall report the following information for the waste stream as determined at the point of waste generation: annual waste quantity, range of benzene concentrations, annual average flow-weighted benzene concentration, and annual benzene quantity;

(ii) For each waste stream identified as being controlled for benzene emissions in accordance with the requirements of this subpart; the table shall report the following information for the waste stream as determined at the applicable location described in §61.355(k)(2): Annual waste quantity, range of benzene concentrations, annual average flow-weighted benzene concentration, and annual benzene quantity.

(6) Beginning 3 months after the date that the equipment necessary to comply with these standards has been certified in accordance with paragraph (d)(1) of this section, the owner or operator shall submit quarterly to the Administrator a certification that all of the required inspections have been carried out in accordance with the requirements of this subpart.

(7) Beginning 3 months after the date that the equipment necessary to comply with these standards has been certified in accordance with paragraph (d)(1) of this section, the owner or operator shall submit a report quarterly to the Administrator that includes:

(i) If a treatment process or wastewater treatment system unit is monitored in accordance with §61.354(a)(1) of this subpart, then each period of operation during which the concentration of benzene in the monitored waste stream exiting the unit is equal to or greater than 10 ppmw.

(ii) If a treatment process or wastewater treatment system unit is monitored in accordance with §61.354(a)(2) of this subpart, then each 3-hour period of operation during which the average value of the monitored parameter is outside the range of acceptable values or during which the unit is not operating as designed.

(iii) If a treatment process or wastewater treatment system unit is monitored in accordance with §61.354(b), then each period of operation during which the flow-weighted annual average concentration of benzene in the monitored waste stream entering the unit is equal to or greater than 10 ppmw and/or the total annual benzene quantity is equal to or greater than 1.0 mg/yr.

(iv) For a control device monitored in accordance with §61.354(c) of this subpart, each period of operation monitored during which any of the following conditions occur, as applicable to the control device:

(A) Each 3-hour period of operation during which the average temperature of the gas stream in the combustion zone of a thermal vapor incinerator, as measured by the temperature monitoring device, is more than 28°C (50°F) below the design combustion zone temperature.

(B) Each 3-hour period of operation during which the average temperature of the gas stream immediately before the catalyst bed of a catalytic vapor incinerator, as measured by the temperature monitoring device, is more than 28°C (50°F) below the design gas stream temperature, and any 3-hour period during which the average temperature difference across the catalyst bed (i.e., the difference between the temperatures of the gas stream immediately before and after the catalyst bed), as measured by the temperature monitoring device, is less than 80 percent of the design temperature difference.

(C) Each 3-hour period of operation during which the average temperature of the gas stream in the combustion zone of a boiler or process heater having a design heat input capacity less than 44 MW (150 x 10^6 BTU/hr), as measured by the temperature monitoring device, is more than 28°C (50°F) below the design combustion zone temperature.

(D) Each 3-hour period of operation during which the average concentration of organics or the average concentration of benzene in the exhaust gases from a carbon adsorber, condenser, or other vapor recovery system is more than 20 percent greater than the design concentration level of organics or benzene in

the exhaust gas.

(E) Each 3-hour period of operation during which the temperature of the condenser exhaust vent stream is more than 6°C (11°F) above the design average exhaust vent stream temperature, or the temperature of the coolant fluid exiting the condenser is more than 6°C (11°F) above the design average coolant fluid temperature at the condenser outlet.

(F) Each period in which the pilot flame of a flare is absent.

(G) Each occurrence when there is a change in the location at which the vent stream is introduced into the flame zone of a boiler or process heater as required by §61.349(a)(2)(i)(C) of this subpart.

(H) Each occurrence when the carbon in a carbon adsorber system that is regenerated directly on site in the control device is not regenerated at the predetermined carbon bed regeneration time.

(I) Each occurrence when the carbon in a carbon adsorber system that is not regenerated directly on site in the control device is not replaced at the predetermined interval specified in §61.354(c) of this subpart.

(J) Each 3-hour period of operation during which the parameters monitored are outside the range of values specified in §61.349(a)(2)(iv)(C), or any other periods specified by the Administrator for a control device subject to the requirements of §61.349(a)(2)(iv).

(v) For a cover and closed-vent system monitored in accordance with §61.354(g), the owner or operator shall submit a report quarterly to the Administrator that identifies any period in which the pressure in the waste management unit is equal to or greater than atmospheric pressure.

(8) Beginning one year after the date that the equipment necessary to comply with these standards has been certified in accordance with paragraph (d)(1) of this section, the owner or operator shall submit annually to the Administrator a report that summarizes all inspections required by §§61.342 through 61.354 during which detectable emissions are measured or a problem (such as a broken seal, gap or other problem) that could result in benzene emissions is identified, including information about the repairs or corrective action taken.

(e) An owner or operator electing to comply with the provisions of §61.351 or §61.352 of this subpart shall notify the Administrator of the alternative standard selected in the report required under §61.07 or §61.10 of this part.

(f) An owner or operator who elects to install and operate the control equipment in §61.351 of this subpart shall comply with the reporting requirements in 40 CFR 60.115b.

(g) An owner or operator who elects to install and operate the control equipment in §61.352 of this subpart shall submit initial and quarterly reports that identify all seal gap measurements, as required in 40 CFR 60.693-2(a), that are outside the prescribed limits.

[55 FR 8346, Mar. 7 1990; 55 FR 12444, Apr. 3, 1990, as amended at 55 FR 37231, Sept. 10,1990; 58 FR 3105, Jan. 7, 1993; 65 FR 62161, Oct. 17, 2000]

§ 61.358 Delegation of authority.

(a) In delegating implementation and enforcement authority to a State under section 112(d) of the Clean Air Act, the authorities contained in paragraph (b) of this section shall be retained by the Administrator and not transferred to a State.

(b) Alternative means of emission limitation under §61.353 of this subpart will not be delegated to States.

§ 61.359 [Reserved]