Report on the Upper Green River Basin Closed Top Produced Water Tank Emission Study

Conducted for the State of Wyoming,
Department of Environmental Quality, Air Quality Division

Report No. 4572 Rev. 2
December 23, 2014

Table of Contents

1 PROJECT OVERVIEW 3

1.1 Objectives 3
1.2 Contact Information 3
1.3 Methodology 4
1.3.1 Pressurized Water Sampling and Analyses Methodology 4
1.3.2 Produced Water Throughput 4
1.3.3 Tank Volumetric Flow Rate Methodology 4
1.3.4 Tank Exhaust Extended Hydrocarbon Sampling and Analysis 4
1.3.5 Methanol Testing 5
1.3.6 Modeling 5
1.4 Discussion of Results 5
1.4.1 VOC Emissions Summary 6
1.4.2 HAP Emissions Summary 6

2 SUMMARY OF RESULTS 7

2.2 Table 1 – Summary of VOC and HAP Results, Site 1 7
2.2 Table 2 – Summary of VOC and HAP Results, Site 2 8
2.3 Table 3 – Summary of VOC and HAP Results, Site 3 9
2.4 Table 4 – Summary of VOC and HAP Results, Site 4 10
2.5 Table 5 – Summary of VOC and HAP Results, Site 5 11
2.6 Table 6 – Summary of VOC and HAP Results, Site 6 12
2.7 Table 7 – Summary of VOC and HAP Results, Site 7 13

3 TEST PROCEDURES 14

3.1 Method Listing 14
3.2 Pre Sampling Activities 14
3.2.1 Pressurized Water Preparation - Floating Piston Cylinder 14
3.2.2 Canister Preparation - Method 18/25C 14
3.2.3 Glassware Preparation - Method 308 15
3.2.4 Other Pre-Sampling Activities 15
3.3 Sampling Locations 15
3.3.1 Pressurized Water Samples 15
3.3.2 Water Tank Vent Gas 15
3.4 Method Sampling Descriptions 16
3.4.1 Pressurized Water Samples 16
3.4.2 Vent Gas Volumetric Flow - Method 2A 16
3.4.3 Vent Gas Speciated Hydrocarbons - Method 18/25C 16
3.4.4 Vent Gas Total VOC - Method 25A, Modified 17
3.4.5 Vent Gas Methanol - Method 308 17
3.5 Method Analytical Descriptions 18
3.5.1 Pressurized Water Samples 18
3.5.2 Vent Gas Speciated Hydrocarbons - Method 18/25C 19
3.5.3 Vent Gas Methanol - Method 308 20

4 PROCESS DESCRIPTION 21

4.1 Overview 21
4.2 Process Data 21

5 APPENDIX

5.1 Figures
5.2 Sample Calculations
5.3 Parameters
5.4 Field Data Printouts
5.5 Field Data
5.6 Laboratory Data
5.7 Calibration Data
5.8 Modeling Results

1 Project Overview

1.1 Objectives

Airtech Environmental Services Inc. was contracted to perform a produced water air emissions study at seven (7) exploration and production facilities located in the Upper Green River Basin. The objective of the test program was to conduct an emissions study for the State of Wyoming, Department of Environmental Quality (WDEQ), Air Quality Division (AQD). The specific objective of the study was to measure the emissions of Volatile Organic Compounds (VOCs) and Hazardous Air Pollutants (HAPs) from the exhausts of various closed-top produced water tanks and to simultaneously collect and analyze pressurized water samples. Additionally, modeling software was used to calculate emissions based upon the pressurized water analysis and separator conditions. The emissions generated by model were compared to the measured emissions. The study was conducted at various natural gas production sites/liquids gathering sites located throughout the Upper Green River Basin (UGRB) in the State of Wyoming. This test program consisted of seven (7) sampling events.

1.2 Contact Information

Testing was performed from June 16 through 27, 2014. All emissions testing and sample collection were performed by Airtech Environmental Services Inc. (Airtech). Analysis of the pressurized water samples was performed by EMPACT Analytical Systems Inc. Analysis of the canister samples for VOCs was performed by Environmental Analytical Service Inc. Modeling was conducted by Process Engineering Associates, LLC. The contact information for each of the principal parties is summarized in the tables below:

Cara Keslar
Wyoming DEQ - Air Quality Division
122 W. 25th St.
Cheyenne, WY 82002
Phone: (307) 777-8684
E-mail: cara.keslar@wyo.gov

Patrick Clark, PE, QSTI
Airtech Environmental Services Inc.
702 West 48th Avenue, Unit J
Denver, CO 80216
Phone: (303) 670-0530
E-mail: pclark@airtechenv.com

Burl McEndree
EMPACT Analytical Systems Inc.
365 South Main
Brighton, Colorado 80601
Phone: (303) 637-0150
E-mail: burl.mcendree@empactanalytical.com

Steve Hoyt
Environmental Analytical Service Inc.
173 Cross Street
San Luis Obispo, CA 93401
Phone: (805) 781-3585
E-mail: stevehoyt@easlab.com

Joel Reagan
Process Engineering Associates, LLC
700 S. Illinois Ave., Suite A-202.
Oak Ridge, TN 37830
Phone: (865) 220-8722
E-mail: jreagan@processengr.com

1.3 Methodology

Prior to testing all water tanks were visually inspected to verify they contain only produced water with no oil. Additionally all hatches and fittings were verified as leak free using EPA Method 21.

1.3.1 Pressurized Water Sampling and Analyses Methodology

Produced water samples were collected by Airtech personnel from the separator for each sampling event. Pressurized liquid samples were gathered to ensure that hydrocarbons remain entrained in the liquid for laboratory analysis. Samples were taken from the separator vessel after the liquids had come to equilibrium, but remained under at least 10 psig pressure. Airtech utilized a floating-piston cylinder for gathering produced water samples and the procedures outlined in Gas Processors Association (GPA) Method 2174.

The operating temperature and pressure of the separator were recorded at the time of sampling. The samples were then transported to the laboratory where they were reheated and re-pressurized to the same conditions recorded at the time of sampling. Samples were analyzed for C1 through C10+ hydrocarbons using GPA 2166 by EMPACT Analytical Systems Inc. located in Brighton, Colorado.

1.3.2 Produced Water Throughput

The volume of produced water in units of barrels per day (bbl/day) was recorded by the owner/operator of each site. Airtech communicated with the owner/operator prior to commencing sampling at each site in order to coordinate recording of this data and to ensure that sampling occurred during normal operating conditions.

1.3.3 Tank Volumetric Flow Rate Methodology

An Actaris Dattus flow meter and the procedures outlined in EPA Method 2A were used for determining the volumetric flow rate through each of the test locations. The Actaris Dattus flow meter works on the fluidic oscillation principle. Sample gas was vented through jets in the meter which cause the gas to oscillate. The frequency of the oscillations were measured by thermal sensors. The volume of gas was determined by measuring the number of oscillations detected by the sensors.

The meter reading and temperature were recorded every 15 minutes during the eight (8) hour test period. The meter read to nearest single cubic foot of gas. Additionally, the barometric pressure was recorded in order to convert the gas volume to standard temperature and pressure. The volumetric flow rate was reported in units of actual cubic feet per minute (acfm) and standard cubic feet per minute (scfm).

1.3.4 Tank Exhaust Extended Hydrocarbon Sampling and Analysis

The procedures outlined in EPA Method 18 and EPA Method 25C were used to determine the concentrations of total hydrocarbons (THC) and speciated Volatile Organic Compounds (VOC) from the exhaust of each test location. Speciated VOCs included alkanes, alkenes and aromatics as well as the Photochemical Assessment Monitoring Stations (PAMS) list of compounds. A gas sample was collected from the exhaust of

each test location into a Summa Canister for a period of approximately two (2) to three (3) hours. Three (3) samples were collected at each test location. Analysis will be performed by Environmental Analytical Service Inc. located in San Luis Obispo, California.

Samples were only collected during periods of vent gas flow as indicated by high levels of THC emissions. Airtech continuously verified the THC concentration using a portable Flame Ionization Detector (FID).

1.3.5 Methanol Testing

EPA Method 308 was used to determine the concentration of methanol at all test locations. A sample of the vent gas was withdrawn from the source and passed through a series of chilled impingers containing HPLC grade water and then through a silica gel adsorbent tube. Methanol in the source was collected in the impingers and in the adsorbent tube. The silica gel tube was desorbed with a 3% (v/v) n-propanol/water mixture and added to the impinger sample. The samples were then analyzed for methanol by direct injection Gas Chromatography (GC) coupled with a Flame Ionization Detector (FID).

1.3.6 Modeling

Modeling was conducted by Process Engineering Associates, LLC (Process) using Chemstations CHEMCAD software. The vapor concentration was determined assuming the vapor and liquid are in equilibrium after flashing and only vapor is venting. The model assumed vapor was in the tank at the start of the transfer from the separator. When the liquid flashed, the flashed vapor from the liquid (which flashes at the rate it is added to the tank) mixed with vapor already in the tank. The model did not account for any physical carryover of liquid into the vent due to vapor entraining liquid.

1.4 Discussion of Results

The results of all testing are summarized in Tables 1 through 7 on Pages 6 through 12 and also in the tables that immediately follow.

The Site 3 post-test pressurized water sample and the Site 7 pre-test pressurized water sample flashed before analysis could be completed. All other pressurized water samples were analyzed.

1.4.1 VOC Emissions Summary

The VOC results of the pressurized water analysis, emissions testing, and modeling are summarized in the table below. The VOC results are the sum of all non-methane VOCs.

Site	Produced Water (bbl/hour)	Total VOCs in Water (lbs/bbl)	Total VOC Emissions Measured (lbs/bbl)	Total VOC Emissions Modeled (lbs/bbl)
Site 1	3.55	0.248	0.459	0.0471
Site 2	4.38	0.315	0.535	0.0794
Site 3	1.00	0.0735	1.11	0.0884
Site 4	0.334	0.0550	2.15	0.0399
Site 5	0.716	0.164	0.823	0.0369
Site 6	26.3	0.139	0.798	0.0549
Site 7[1]	<0.139	5.06	21.4	0.101

1.4.2 HAP Emissions Summary

The HAP results of the pressurized water analysis, emissions testing, and modeling are summarized in the table below. The total HAP results are the sum of benzene, toluene, ethyl benzene, xylenes, n-hexane and methanol.

Site	Produced Water (bbl/hour)	Total HAPs in Water (lbs/bbl)	Total HAP Emissions Measured (lbs/bbl)	Total HAP Emissions Modeled (lbs/bbl)
Site 1	3.55	0.0915	0.133	0.00232
Site 2	4.38	0.130	0.0724	0.00481
Site 3	1.00	0.0284	0.182	0.0293
Site 4	0.334	0.00683	0.189	0.000321
Site 5	0.716	0.0228	0.0780	0.000588
Site 6	26.3	0.0752	0.0537	0.00355
Site 7[1]	<0.139	4.93	1.96	0.0378

Submitted by:

Patrick Clark, P.E.

Reviewed by:

Timothy Wojtach

[1] Oil was observed floating on top the water in the produced water storage tank and significant quantity of methanol was found in the water analysis.

2 Summary of Results

2.2 Table 1 – Summary of VOC and HAP Results, Site 1

Test Parameters	**Run 1**	**Run 2**	**Run 3**	**Average**
Date	6/17/14	6/17/14	6/17/14	
Start Time	9:05	11:23	14:30	
Stop Time	11:05	13:23	16:30	
Process Conditions				
Produced Water (bbl/hr)	3.55	3.55	3.55	**3.55**
Gas Conditions				
Volumetric Flow Rate (acfh)	171	171	171	**171**
Volumetric Flow Rate (scfh)	136	136	136	**136**
Volumetric Flow Rate (scfm)	2.26	2.26	2.26	**2.26**
Pollutant Results				
VOC Concentration (ppmwv)	227,196	349,199	287,069	**287,821**
VOC Emission Rate (lbs/hr)	1.29	1.98	1.62	**1.63**
VOC Emission Rate (tons/yr)	5.63	8.65	7.11	**7.13**
VOC Emissions (lbs/bbl)	0.362	0.557	0.458	**0.459**
Methanol Concentration (ppmwv)	0.718	27.5	33.6	**20.6**
Methanol Emission Rate (lbs/hr)	8.12E-06	3.10E-04	3.80E-04	**2.33E-04**
Methanol Emission Rate (tons/yr)	3.55E-05	1.36E-03	1.66E-03	**1.02E-03**
Methanol Emissions (lbs/bbl)	2.29E-06	8.75E-05	1.07E-04	**6.56E-05**
Benzene Concentration (ppmwv)	2,765	4,108	3,802	**3,558**
Benzene Emission Rate (lbs/hr)	0.0762	0.113	0.105	**0.0980**
Benzene Emission Rate (tons/yr)	0.334	0.496	0.459	**0.429**
Benzene Emissions (lbs/bbl)	0.0215	0.0319	0.0295	**0.0276**
Toluene Concentration (ppmwv)	5,746	8,570	8,260	**7,525**
Toluene Emission Rate (lbs/hr)	0.187	0.278	0.268	**0.245**
Toluene Emission Rate (tons/yr)	0.818	1.22	1.18	**1.07**
Toluene Emissions (lbs/bbl)	0.0526	0.0785	0.0756	**0.0689**
Ethyl Benzene Concentration (ppmwv)	134	236	208	**193**
Ethyl Benzene Emission Rate (lbs/hr)	0.00503	0.00883	0.00778	**0.00721**
Ethyl Benzene Emission Rate (tons/yr)	0.0220	0.0387	0.0341	**0.0316**
Ethyl Benzene Emissions (lbs/bbl)	0.00142	0.00249	0.00219	**0.00203**
Xylenes Concentration (ppmwv)	1,594	2,868	2,442	**2,301**
Xylenes Emission Rate (lbs/hr)	0.0597	0.107	0.0914	**0.0861**
Xylenes Emission Rate (tons/yr)	0.261	0.470	0.400	**0.377**
Xylenes Emissions (lbs/bbl)	0.0168	0.0303	0.0258	**0.0243**
Hexane Concentration (ppmwv)	999	1,375	1,135	**1,170**
Hexane Emission Rate (lbs/hr)	0.0304	0.0418	0.0345	**0.0355**
Hexane Emission Rate (tons/yr)	0.133	0.183	0.151	**0.156**
Hexane Emissions (lbs/bbl)	0.00855	0.01178	0.00972	**0.01002**
Total HAPs Emission Rate (lbs/hr)	0.358	0.550	0.507	**0.472**
Total HAPs Emission Rate (tons/yr)	1.57	2.41	2.22	**2.07**
Total HAPs Emissions (lbs/bbl)	0.101	0.155	0.143	**0.133**

2.2 Table 2 – Summary of VOC and HAP Results, Site 2

Test Parameters	**Run 1**	**Run 2**	**Run 3**	**Average**
Date	6/18/14	6/18/14	6/18/14	
Start Time	8:30	11:15	14:30	
Stop Time	10:30	13:15	16:30	
Process Conditions				
Produced Water (bbl/hr)	4.38	4.38	4.38	**4.38**
Gas Conditions				
Volumetric Flow Rate (acfh)	153	153	153	**153**
Volumetric Flow Rate (scfh)	120	120	120	**120**
Volumetric Flow Rate (scfm)	2.01	2.01	2.01	**2.01**
Pollutant Results				
VOC Concentration (ppmwv)	681,356	288,604	432,777	**467,579**
VOC Emission Rate (lbs/hr)	3.42	1.45	2.17	**2.34**
VOC Emission Rate (tons/yr)	15.0	6.34	9.50	**10.3**
VOC Emissions (lbs/bbl)	0.779	0.330	0.495	**0.535**
Methanol Concentration (ppmwv)	1,422	508	167	**699**
Methanol Emission Rate (lbs/hr)	0.0142	0.00509	0.00168	**0.00700**
Methanol Emission Rate (tons/yr)	0.0624	0.0223	0.00734	**0.0307**
Methanol Emissions (lbs/bbl)	0.00325	0.00116	0.000382	**0.00160**
Benzene Concentration (ppmwv)	3,616	1,774	2,490	**2,627**
Benzene Emission Rate (lbs/hr)	0.0883	0.0433	0.0608	**0.0641**
Benzene Emission Rate (tons/yr)	0.387	0.190	0.266	**0.281**
Benzene Emissions (lbs/bbl)	0.0201	0.00988	0.0139	**0.0146**
Toluene Concentration (ppmwv)	5,047	3,804	4,471	**4,441**
Toluene Emission Rate (lbs/hr)	0.145	0.110	0.129	**0.128**
Toluene Emission Rate (tons/yr)	0.637	0.480	0.564	**0.560**
Toluene Emissions (lbs/bbl)	0.0332	0.0250	0.0294	**0.0292**
Ethyl Benzene Concentration (ppmwv)	120	138	152	**137**
Ethyl Benzene Emission Rate (lbs/hr)	0.00399	0.00457	0.00505	**0.00454**
Ethyl Benzene Emission Rate (tons/yr)	0.0175	0.0200	0.0221	**0.0199**
Ethyl Benzene Emissions (lbs/bbl)	0.00091	0.00104	0.00115	**0.00103**
Xylenes Concentration (ppmwv)	1,315	1,668	1,821	**1,602**
Xylenes Emission Rate (lbs/hr)	0.0436	0.0554	0.0604	**0.0531**
Xylenes Emission Rate (tons/yr)	0.191	0.243	0.265	**0.233**
Xylenes Emissions (lbs/bbl)	0.0100	0.0126	0.0138	**0.0121**
Hexane Concentration (ppmwv)	3,341	1,295	2,121	**2,252**
Hexane Emission Rate (lbs/hr)	0.0900	0.0349	0.0571	**0.0607**
Hexane Emission Rate (tons/yr)	0.394	0.153	0.250	**0.266**
Hexane Emissions (lbs/bbl)	0.0205	0.00796	0.0130	**0.0138**
Total HAPs Emission Rate (lbs/hr)	0.386	0.253	0.314	**0.317**
Total HAPs Emission Rate (tons/yr)	1.69	1.11	1.37	**1.39**
Total HAPs Emissions (lbs/bbl)	0.0880	0.0577	0.0716	**0.0724**

2.3 Table 3 – Summary of VOC and HAP Results, Site 3

Test Parameters	**Run 1**	**Run 2**	**Run 3**	**Average**
Date	6/19/14	6/19/14	6/19/14	
Start Time	9:30	12:30	15:00	
Stop Time	11:30	14:30	17:00	
Process Conditions				
Produced Water (bbl/hr)	1.0	1.0	1.0	**1.0**
Gas Conditions				
Volumetric Flow Rate (acfh)	123	123	123	**123**
Volumetric Flow Rate (scfh)	95.5	95.5	95.5	**95.5**
Volumetric Flow Rate (scfm)	1.59	1.59	1.59	**1.59**
Pollutant Results				
VOC Concentration (ppmwv)	218,705	427,859	190,456	**279,007**
VOC Emission Rate (lbs/hr)	0.869	1.70	0.757	**1.11**
VOC Emission Rate (tons/yr)	3.81	7.45	3.32	**4.86**
VOC Emissions (lbs/bbl)	0.869	1.70	0.757	**1.11**
Methanol Concentration (ppmwv)	0.608	0.0747	0.559	**0.414**
Methanol Emission Rate (lbs/hr)	4.83E-06	5.93E-07	4.44E-06	**3.29E-06**
Methanol Emission Rate (tons/yr)	2.11E-05	2.60E-06	1.95E-05	**1.44E-05**
Methanol Emissions (lbs/bbl)	4.83E-06	5.93E-07	4.44E-06	**3.29E-06**
Benzene Concentration (ppmwv)	1,134	1,925	745	**1,268**
Benzene Emission Rate (lbs/hr)	0.0219	0.0373	0.0144	**0.0245**
Benzene Emission Rate (tons/yr)	0.0961	0.163	0.0631	**0.107**
Benzene Emissions (lbs/bbl)	0.0219	0.0373	0.0144	**0.0245**
Toluene Concentration (ppmwv)	2,456	4,372	2,064	**2,964**
Toluene Emission Rate (lbs/hr)	0.0561	0.0998	0.0471	**0.0677**
Toluene Emission Rate (tons/yr)	0.246	0.437	0.206	**0.296**
Toluene Emissions (lbs/bbl)	0.0561	0.0998	0.0471	**0.0677**
Ethyl Benzene Concentration (ppmwv)	132	273	129	**178**
Ethyl Benzene Emission Rate (lbs/hr)	0.00346	0.00719	0.00340	**0.00468**
Ethyl Benzene Emission Rate (tons/yr)	0.0152	0.0315	0.0149	**0.0205**
Ethyl Benzene Emissions (lbs/bbl)	0.00346	0.00719	0.00340	**0.00468**
Xylenes Concentration (ppmwv)	1,766	3,612	1,840	**2,406**
Xylenes Emission Rate (lbs/hr)	0.0464	0.0950	0.0484	**0.0633**
Xylenes Emission Rate (tons/yr)	0.203	0.416	0.212	**0.277**
Xylenes Emissions (lbs/bbl)	0.0464	0.0950	0.0484	**0.0633**
Hexane Concentration (ppmwv)	929	1,575	610	**1,038**
Hexane Emission Rate (lbs/hr)	0.0198	0.0336	0.0130	**0.0222**
Hexane Emission Rate (tons/yr)	0.0869	0.147	0.0570	**0.0971**
Hexane Emissions (lbs/bbl)	0.0198	0.0336	0.0130	**0.0222**
Total HAPs Emission Rate (lbs/hr)	0.148	0.273	0.126	**0.182**
Total HAPs Emission Rate (tons/yr)	0.647	1.20	0.553	**0.799**
Total HAPs Emissions (lbs/bbl)	0.148	0.273	0.126	**0.182**

2.4 Table 4 – Summary of VOC and HAP Results, Site 4

Test Parameters	**Run 1**	**Run 2**	**Run 3**	**Average**
Date	6/23/14	6/23/14	6/23/14	
Start Time	10:15	13:00	15:40	
Stop Time	12:15	15:00	17:40	
Process Conditions				
Produced Water (bbl/hr)	0.334	0.334	0.334	**0.334**
Gas Conditions				
Volumetric Flow Rate (acfh)	60.2	60.2	60.2	**60.2**
Volumetric Flow Rate (scfh)	45.8	45.8	45.8	**45.8**
Volumetric Flow Rate (scfm)	0.763	0.763	0.763	**0.763**
Pollutant Results				
VOC Concentration (ppmwv)	449,444	461,293	221,048	**377,262**
VOC Emission Rate (lbs/hr)	0.856	0.879	0.421	**0.719**
VOC Emission Rate (tons/yr)	3.75	3.85	1.84	**3.15**
VOC Emissions (lbs/bbl)	2.56	2.63	1.26	**2.15**
Methanol Concentration (ppmwv)	1.26	1.04	0.0980	**0.800**
Methanol Emission Rate (lbs/hr)	4.81E-06	3.95E-06	3.73E-07	**3.05E-06**
Methanol Emission Rate (tons/yr)	2.11E-05	1.73E-05	1.63E-06	**1.33E-05**
Methanol Emissions (lbs/bbl)	1.44E-05	1.18E-05	1.12E-06	**9.12E-06**
Benzene Concentration (ppmwv)	411	401	203	**338**
Benzene Emission Rate (lbs/hr)	0.00381	0.00372	0.00189	**0.00314**
Benzene Emission Rate (tons/yr)	0.0167	0.0163	0.00826	**0.0137**
Benzene Emissions (lbs/bbl)	0.0114	0.0111	0.00565	**0.00940**
Toluene Concentration (ppmwv)	178	2,650	84.8	**971**
Toluene Emission Rate (lbs/hr)	0.00195	0.0290	0.000928	**0.0106**
Toluene Emission Rate (tons/yr)	0.00853	0.127	0.00406	**0.0465**
Toluene Emissions (lbs/bbl)	0.00583	0.0868	0.00278	**0.0318**
Ethyl Benzene Concentration (ppmwv)	175	30.3	55.5	**87.0**
Ethyl Benzene Emission Rate (lbs/hr)	0.00221	0.000381	0.000700	**0.00110**
Ethyl Benzene Emission Rate (tons/yr)	0.00968	0.00167	0.00307	**0.00481**
Ethyl Benzene Emissions (lbs/bbl)	0.00662	0.00114	0.00210	**0.00329**
Xylenes Concentration (ppmwv)	471	2,911	314	**1,232**
Xylenes Emission Rate (lbs/hr)	0.00594	0.0367	0.00396	**0.0155**
Xylenes Emission Rate (tons/yr)	0.0260	0.161	0.0174	**0.0681**
Xylenes Emissions (lbs/bbl)	0.0178	0.110	0.0119	**0.0465**
Hexane Concentration (ppmwv)	4,034	3,738	1,783	**3,185**
Hexane Emission Rate (lbs/hr)	0.0413	0.0383	0.0182	**0.0326**
Hexane Emission Rate (tons/yr)	0.181	0.168	0.0799	**0.143**
Hexane Emissions (lbs/bbl)	0.124	0.115	0.0546	**0.0976**
Total HAPs Emission Rate (lbs/hr)	0.0552	0.108	0.0257	**0.0630**
Total HAPs Emission Rate (tons/yr)	0.242	0.473	0.113	**0.276**
Total HAPs Emissions (lbs/bbl)	0.165	0.324	0.0770	**0.189**

2.5 Table 5 – Summary of VOC and HAP Results, Site 5

Test Parameters	**Run 1**	**Run 2**	**Run 3**	**Average**
Date	6/25/14	6/25/14	6/25/14	
Start Time	10:10	13:05	16:30	
Stop Time	12:10	15:05	18:30	
Process Conditions				
Produced Water (bbl/hr)	0.716	0.716	0.716	**0.716**
Gas Conditions				
Volumetric Flow Rate (acfh)	173	173	173	**173**
Volumetric Flow Rate (scfh)	132	132	132	**132**
Volumetric Flow Rate (scfm)	2.21	2.21	2.21	**2.21**
Pollutant Results				
VOC Concentration (ppmwv)	156,218	134,918	29,910	**107,015**
VOC Emission Rate (lbs/hr)	0.861	0.743	0.165	**0.590**
VOC Emission Rate (tons/yr)	3.77	3.26	0.722	**2.58**
VOC Emissions (lbs/bbl)	1.20	1.04	0.230	**0.823**
Methanol Concentration (ppmwv)	0.104	0.100	0.0900	**0.0982**
Methanol Emission Rate (lbs/hr)	1.15E-06	1.10E-06	9.90E-07	**1.08E-06**
Methanol Emission Rate (tons/yr)	5.02E-06	4.84E-06	4.34E-06	**4.73E-06**
Methanol Emissions (lbs/bbl)	1.60E-06	1.54E-06	1.38E-06	**1.51E-06**
Benzene Concentration (ppmwv)	68.7	38.8	32.2	**46.6**
Benzene Emission Rate (lbs/hr)	0.00184	0.00104	0.000865	**0.00125**
Benzene Emission Rate (tons/yr)	0.00807	0.00456	0.00379	**0.00547**
Benzene Emissions (lbs/bbl)	0.00257	0.00145	0.00121	**0.00174**
Toluene Concentration (ppmwv)	334	183	38.2	**185**
Toluene Emission Rate (lbs/hr)	0.0106	0.00580	0.00121	**0.00586**
Toluene Emission Rate (tons/yr)	0.0463	0.0254	0.00529	**0.0256**
Toluene Emissions (lbs/bbl)	0.0148	0.00809	0.00169	**0.00818**
Ethyl Benzene Concentration (ppmwv)	23.9	17.9	11.0	**17.6**
Ethyl Benzene Emission Rate (lbs/hr)	0.000872	0.000651	0.000401	**0.000641**
Ethyl Benzene Emission Rate (tons/yr)	0.00382	0.00285	0.00176	**0.00281**
Ethyl Benzene Emissions (lbs/bbl)	0.00122	0.000909	0.000560	**0.000896**
Xylenes Concentration (ppmwv)	1,731	1,590	101	**1,141**
Xylenes Emission Rate (lbs/hr)	0.0631	0.0580	0.00369	**0.0416**
Xylenes Emission Rate (tons/yr)	0.276	0.254	0.0162	**0.182**
Xylenes Emissions (lbs/bbl)	0.0882	0.0810	0.00515	**0.0581**
Hexane Concentration (ppmwv)	387	239	30.9	**219**
Hexane Emission Rate (lbs/hr)	0.0114	0.00707	0.000914	**0.00648**
Hexane Emission Rate (tons/yr)	0.0501	0.0309	0.00400	**0.0284**
Hexane Emissions (lbs/bbl)	0.0160	0.00987	0.00128	**0.00904**
Total HAPs Emission Rate (lbs/hr)	0.0878	0.0725	0.00708	**0.0558**
Total HAPs Emission Rate (tons/yr)	0.385	0.318	0.0310	**0.244**
Total HAPs Emissions (lbs/bbl)	0.123	0.101	0.00989	**0.0780**

2.6 Table 6 – Summary of VOC and HAP Results, Site 6

Test Parameters	**Run 1**	**Run 2**	**Run 3**	**Average**
Date	6/26/14	6/26/14	6/26/14	
Start Time	9:00	11:50	14:30	
Stop Time	11:00	13:50	16:30	
Process Conditions				
Produced Water (bbl/hr)	26.3	26.3	26.3	**26.3**
Gas Conditions				
Volumetric Flow Rate (acfh)	651	651	651	**651**
Volumetric Flow Rate (scfh)	507	507	507	**507**
Volumetric Flow Rate (scfm)	8.45	8.45	8.45	**8.45**
Pollutant Results				
VOC Concentration (ppmwv)	839,319	1,218,649	919,425	**992,464**
VOC Emission Rate (lbs/hr)	17.7	25.7	19.4	**20.9**
VOC Emission Rate (tons/yr)	77.6	113	85.0	**91.7**
VOC Emissions (lbs/bbl)	0.675	0.980	0.739	**0.798**
Methanol Concentration (ppmwv)	19.0	56.4	55.2	**43.6**
Methanol Emission Rate (lbs/hr)	8.02E-04	2.38E-03	2.33E-03	**1.84E-03**
Methanol Emission Rate (tons/yr)	3.51E-03	1.04E-02	1.02E-02	**8.04E-03**
Methanol Emissions (lbs/bbl)	3.06E-05	9.06E-05	8.87E-05	**7.00E-05**
Benzene Concentration (ppmwv)	1,876	2,674	2,471	**2,340**
Benzene Emission Rate (lbs/hr)	0.193	0.275	0.254	**0.241**
Benzene Emission Rate (tons/yr)	0.844	1.20	1.11	**1.05**
Benzene Emissions (lbs/bbl)	0.00734	0.0105	0.00967	**0.00916**
Toluene Concentration (ppmwv)	3,161	4,307	3,679	**3,716**
Toluene Emission Rate (lbs/hr)	0.383	0.522	0.446	**0.451**
Toluene Emission Rate (tons/yr)	1.68	2.29	1.95	**1.97**
Toluene Emissions (lbs/bbl)	0.0146	0.0199	0.0170	**0.0172**
Ethyl Benzene Concentration (ppmwv)	145	186	139	**156**
Ethyl Benzene Emission Rate (lbs/hr)	0.0202	0.0260	0.0194	**0.0219**
Ethyl Benzene Emission Rate (tons/yr)	0.0885	0.114	0.0849	**0.0957**
Ethyl Benzene Emissions (lbs/bbl)	0.000770	0.000990	0.000739	**0.000833**
Xylenes Concentration (ppmwv)	1,625	2,002	1,458	**1,695**
Xylenes Emission Rate (lbs/hr)	0.227	0.280	0.204	**0.237**
Xylenes Emission Rate (tons/yr)	0.995	1.22	0.892	**1.04**
Xylenes Emissions (lbs/bbl)	0.00865	0.0107	0.00776	**0.00902**
Hexane Concentration (ppmwv)	3,366	4,730	4,006	**4,034**
Hexane Emission Rate (lbs/hr)	0.382	0.536	0.454	**0.457**
Hexane Emission Rate (tons/yr)	1.67	2.35	1.99	**2.00**
Hexane Emissions (lbs/bbl)	0.0145	0.0204	0.0173	**0.0174**
Total HAPs Emission Rate (lbs/hr)	1.21	1.64	1.38	**1.41**
Total HAPs Emission Rate (tons/yr)	5.28	7.19	6.04	**6.17**
Total HAPs Emissions (lbs/bbl)	0.0459	0.0625	0.0526	**0.0537**

2.7 Table 7 – Summary of VOC and HAP Results, Site 7

Test Parameters	**Run 1**	**Run 2**	**Run 3**	**Average**
Date	6/27/14	6/27/14	6/27/14	
Start Time	8:40	11:15	13:35	
Stop Time	10:40	13:15	15:35	
Process Conditions				
Produced Water (bbl/hr)	<0.139	<0.139	<0.139	**<0.139**
Gas Conditions				
Volumetric Flow Rate (acfh)	159	159	159	**159**
Volumetric Flow Rate (scfh)	123	123	123	**123**
Volumetric Flow Rate (scfm)	2.05	2.05	2.05	**2.05**
Pollutant Results				
VOC Concentration (ppmwv)	665,918	600,883	479,046	**581,949**
VOC Emission Rate (lbs/hr)	3.40	3.07	2.45	**2.98**
VOC Emission Rate (tons/yr)	14.9	13.5	10.7	**13.0**
VOC Emissions (lbs/bbl)	24.5	22.1	17.6	**21.4**
Methanol Concentration (ppmwv)	585	1,482	860	**976**
Methanol Emission Rate (lbs/hr)	0.00597	0.0151	0.00878	**0.00996**
Methanol Emission Rate (tons/yr)	0.0262	0.0663	0.0385	**0.0436**
Methanol Emissions (lbs/bbl)	0.0429	0.109	0.0631	**0.0716**
Benzene Concentration (ppmwv)	1,455	1,622	1,359	**1,479**
Benzene Emission Rate (lbs/hr)	0.0362	0.0404	0.0338	**0.0368**
Benzene Emission Rate (tons/yr)	0.159	0.177	0.148	**0.161**
Benzene Emissions (lbs/bbl)	0.260	0.290	0.243	**0.265**
Toluene Concentration (ppmwv)	4,203	3,122	2,519	**3,281**
Toluene Emission Rate (lbs/hr)	0.123	0.0917	0.0740	**0.0964**
Toluene Emission Rate (tons/yr)	0.541	0.402	0.324	**0.422**
Toluene Emissions (lbs/bbl)	0.887	0.659	0.532	**0.693**
Ethyl Benzene Concentration (ppmwv)	164	51.5	114	**110**
Ethyl Benzene Emission Rate (lbs/hr)	0.00556	0.00174	0.00385	**0.00372**
Ethyl Benzene Emission Rate (tons/yr)	0.0244	0.00763	0.0169	**0.0163**
Ethyl Benzene Emissions (lbs/bbl)	0.0400	0.0125	0.0276	**0.0267**
Xylenes Concentration (ppmwv)	1,786	1,629	1,220	**1,545**
Xylenes Emission Rate (lbs/hr)	0.0604	0.0551	0.0413	**0.0523**
Xylenes Emission Rate (tons/yr)	0.265	0.241	0.181	**0.229**
Xylenes Emissions (lbs/bbl)	0.434	0.396	0.297	**0.376**
Hexane Concentration (ppmwv)	3,034	2,696	2,263	**2,664**
Hexane Emission Rate (lbs/hr)	0.0833	0.0740	0.0622	**0.0732**
Hexane Emission Rate (tons/yr)	0.365	0.324	0.272	**0.321**
Hexane Emissions (lbs/bbl)	0.599	0.532	0.447	**0.526**
Total HAPs Emission Rate (lbs/hr)	0.315	0.278	0.224	**0.272**
Total HAPs Emission Rate (tons/yr)	1.38	1.22	0.981	**1.19**
Total HAPs Emissions (lbs/bbl)	2.26	2.00	1.61	**1.96**

3 Test Procedures

3.1 Method Listing

The test methods found in 40 CFR, Part 60, Appendix A and the GPA compendium of standards and bulletins will be referenced during the test program. The following individual methods were referenced:

Method 2A	Direct Measurement of Gas Volume in Pipes and Small Ducts
Method 18	Measurement of Gaseous Organic Compounds Emissions by Gas Chromatography
Method 25A	Determination of Total Gaseous Organic Concentration Using a Flame Ionization Analyzer
Method 25C	Determination of Non-Methane Organic Compounds (NMOC) in Landfill Gases
Method 308	Procedure for Determination of Methanol Emissions from Stationary Sources
GPA 2174	Obtaining Liquid Hydrocarbon Samples for Analysis by Gas Chromatography
GPA 2186	Method for Extended Analysis of Hydrocarbon Liquid Mixtures Containing Nitrogen and Carbon Dioxide by Temperature Programmed Gas Chromatography

3.2 Pre Sampling Activities

3.2.1 Pressurized Water Preparation - Floating Piston Cylinder

The floating piston cylinders were prepared and cleaned prior to use. The sample cylinder were placed into a bucket of hot, soapy water. The water temperature must be above 120°F, to assist in the removal of heavier oil residues. The sample cylinders were allowed to soak in the soapy water for about 30 minutes. After soaking, the cylinders were removed and the inside scrubbed with a brush. The cylinder were then rinsed thoroughly with clean hot water after scrubbing. The cylinders were allowed to drain and air dry for 15 minutes. The sample cylinders were placed under heating blankets and heated for two (2) hours. After heating, the cylinders were removed from the heat blanket and attached to a Helium (or Nitrogen) purge hose. Each sample cylinder was purged with Helium for 30 seconds. Once the cylinders were purged, the sample valves on both ends of the cylinder were reattached and the cylinder purged again with Helium for 15 seconds. The valves were then closed and the cylinders ready for use.

3.2.2 Canister Preparation - Method 18/25C

Each of the sample tanks used for the Method 18/25C sampling was prepared and certified as clean prior to use. In preparation for sampling, each canister was heated and simultaneously evacuated to <0.05 mm Hg and held at vacuum for at least one (1) hour.

The canister was then pressurized with zero air to approximately 206 kPa (30 psig) and the canister vented to atmosphere. This cycle of evacuation-pressurization was repeated three (3) times. After the final pressurization the canister was then analyzed for VOCs using a Gas Chromatograph coupled with a Flame Ionization Detector. Any canister that was greater than 1.0 ppmv of any targeted VOC was not used.

3.2.3 Glassware Preparation - Method 308

Sample train glassware and sample containers required specialized pre-cleaning to avoid contamination of the sample from the collection container or devices. Bottle caps were fitted with Teflon liners, which were cleaned in the same manner as the bottles themselves. Sample containers were purchased pre-cleaned and sealed to specified EPA protocols. Cleaning/storage procedures for sample train glassware are summarized below:

- EPA Method 308 glassware and components - washed with soap and water, rinsed three times with deionized (DI) water and air dried. Open ends were sealed prior to shipment to the field with paraffin.

3.2.4 Other Pre-Sampling Activities

Prior to testing all water tanks were visually inspected to verify they contain only produced water with no oil. Additionally all hatches and fittings were verified as leak free. Airtech used a Method 21 type portable hydrocarbon analyzer to inspect for leaks. Monitoring of the various components was conducted using EPA Method 21. A Foxboro Toxic Vapor Analyzer (TVA) 1000B was utilized. The TVA was calibrated at the beginning and end of each test day with zero gas and a calibration gas of methane in air. The probe inlet was placed at the component interface where leakage could occur. The probe was moved along the interface periphery until the maximum reading was obtained. The probe was left at the position of maximum reading and monitored for two times the response time of the TVA. If any hatches or fittings indicates a reading of greater than 100 ppm, the facility was notified and repairs conducted. The hatch or fitting was then retested to verify the repairs were effective.

3.3 Sampling Locations

3.3.1 Pressurized Water Samples

Pressurized water samples were collected from the separator through a tube or pipe style fitting. The pressurized water samples were collected before the water pressure is released and the water dumped to the storage tank.

3.3.2 Water Tank Vent Gas

Each water tank was fitted with either two (2) inch NPT or four (4) inch NPT pipe fittings. Airtech added additional piping to the tank exhaust that was equipped with fittings to connect the various sample trains. After the sample connections the effluent passed through the Method 2A gas meter. Additional hosing was attached to the gas meter outlet to vent fumes away from personnel and potential spark sources.

3.4 Method Sampling Descriptions

3.4.1 Pressurized Water Samples

GPA 2174 and the Floating-Piston Cylinder method were used for gathering pressurized water samples. The cylinders were provided by EMPACT Analytical Systems Inc. The floating-piston was pressurized with inert gas to a pressure of at least 10 psig above the separator vessel pressure. Sample liquid entered the cylinder while the inert gas was slowly purged by the sampling technician. This allowed liquid to be gathered without allowing flashing or gas expansion to occur. The GPA 2174 sampling apparatus is shown in Figure 1 in the Appendix.

The sampling piston was connected to the sampling point on the pressurized vessel using a tube or pipe fitting. The sample line was purged with pressurized water. Once the sample line was purged the cylinder gas pressure was slowly reduced by venting the gas and allowing liquid to enter the cylinder at a slow rate of approximately 60 ml per minute to prevent flashing. The pressure and temperature of the sample were recorded. Sample was collected until the cylinder was 80 percent full. At the conclusion of sampling the valves were closed and the ends sealed with caps. The cylinder was properly labeled and placed in a transport case for shipment to the laboratory. The Chain of Custody (COC) was completed and a copy included with the samples.

3.4.2 Vent Gas Volumetric Flow - Method 2A

An Actaris Dattus flow meter and the procedures outlined in EPA Method 2A will be used for determining the volumetric flow rate through the test location. The Actaris Dattus flow meter works on the fluidic oscillation principle. Sample gas is vented through jets in the meter which cause the gas to oscillate. The frequency of the oscillations is measured by thermal sensors. The volume of gas is determined by measuring the number of oscillations detected by the sensors. The meter reads to nearest single cubic foot of gas. Periodically during each test run, the gas temperature and pressure were recorded in order to convert the gas volume to standard temperature and pressure. Additional information on the flowmeter can be found in Section 6.7 of the Appendix.

3.4.3 Vent Gas Speciated Hydrocarbons - Method 18/25C

The concentration of specific VOCs at each test location were determined using the general guidelines found Methods 18 and 25C. In Method 18/25C, an evacuated tank was used to withdraw a sample from the test location. The tank was then transferred to the laboratory and analyzed for specific hydrocarbons.

The sample tanks used were leak-free stainless steel tanks with a volume of six (6) liters. The tanks were equipped with a short 1/8 inch tube sample probe, a sample valve and had specially prepared interior surfaces. The tank was equipped with a flow-restrictive inlet (i.e. orifice) which allowed for sampling over a period of one (1) to three (3) hours. The Method 18/25C sampling train is shown as Figure 2 in the Appendix.

Prior to sampling the canister was evacuated to a vacuum of 0.05 mm Hg and the sample tank vacuum measured with a mercury manometer. The tank temperature and the ambient barometric pressure were also recorded. The sample train was leak-checked prior to sampling by capping the end of the probe and recording the tank vacuum after a period of 30 minutes. A leak check was considered valid if after 30 minutes there was no change in the tank vacuum.

Sampling was conducted over one (1) to three (3) hours and only during times when the Method 25A analyzer indicates there were hydrocarbon emissions. After sampling the tank temperature and pressure were measured and recorded. The Chain of Custody (COC) was completed and a copy included with the samples. The tanks were labeled and prepared for transport to the Environmental Analytical Service Inc. laboratory located in San Luis Obispo, California.

3.4.4 Vent Gas Total VOC - Method 25A, Modified

The total VOC concentration at each test location was determined using a modified version of EPA Method 25A. The purpose of operating modified Method 25A was to qualitatively determine when emissions are being vented from the water tank and to avoid samples being collected during times of no emissions. In Method 25A a sample of the gas stream is withdrawn from the test location. The sample gas passed directly into a portable Flame Ionization Analyzer (FIA). 100 percent hydrogen was used to fuel the instrument. Zero air and calibration gases of methane in nitrogen were used for all calibration checks.

Prior to each test week, a calibration error test was performed. The zero gas and high level gas were introduced to the analyzer at the calibration valve assembly and the analyzer set to the appropriate levels. The mid and low level gases were also introduced to the analyzer and the predicted response compared to the actual response of the analyzers. The difference was less than the minimum requirement of five (5) percent of the calibration gas value. Before and after each test day in the field, the instrument drift was determined by introducing the zero gas and one calibration gas at the probe tip through a calibration valve assembly while making no adjustments to the analyzer. For all test runs the drift was less than the minimum requirements of three (3) percent of the span value.

3.4.5 Vent Gas Methanol - Method 308

EPA Method 308 was used to determine the methanol concentration at each test location. In Method 308, a sample of the gas stream was withdrawn from the source and the methanol collected in a series of midget impingers containing distilled water and in a silica adsorbent tube. The impinger contents and silica gel tube were recovered and analyzed by GC-FID. The Method 308 sampling train is shown as Figure 3 in the Appendix.
To prevent contamination, all components of the sample train were constructed of glass with no metal connections. Prior to testing, the components were washed using detergent

and then rinsed with distilled water. After drying, all components were sealed with parafilm or Teflon tape.

The sample probe was constructed of glass or Teflon. Sample gas passed through the probe and then through a series of three (3) midget impingers. The first and second impingers each contained 15 ml of water. The third impinger was empty. The sample gas then passed through a silica gel tube. The dry gas exiting the impinger system then passed through a sample pump and a dry gas meter to measure the gas volume.

The sample train was leak checked prior to the test run by capping the probe tip and pulling a vacuum of at least 15 in.Hg. A leak check was considered valid if the leak rate was less than 0.04 liters per minute or four percent of the average sample rate. When not in operation inside the vent, the probe tip was sealed with Teflon tape.

Sampling was conducted at a rate of one (1) liter per minute. Sampling was conducted over two (2) hours and only during times when the Method 25A analyzer indicated there were hydrocarbon emissions. After the test run, the train was leak checked at the highest vacuum encountered during the test run. The solutions contained in the impingers were then transferred into a 40 ml VOA vial. The probe, impingers and all connecting glassware were then be rinsed with water and the rinse added to the sample jar. The VOA vial was filled with VOC free water to eliminate headspace. The silica gel tube was removed from the sample train and capped. The samples were labeled and placed on ice for transport to the Airtech laboratory located in Denver, Colorado.

3.5 Method Analytical Descriptions

3.5.1 Pressurized Water Samples

Sample analysis was conducted using a Gas Chromatograph coupled with a Flame Ionization Detector (GC-FID) and also a Thermal Conductivity Detector (GC-TCD). Two separate volumes of the liquid sample were injected onto two (2) separate chromatographic columns. For the hydrocarbons, the target compounds were separated using a capillary column and quantified with the FID. For the non-hydrocarbon compounds (i.e. nitrogen, carbon dioxide), the target compounds were separated using a packed column and quantified using the TCD.

The liquid injection port was an automated six (6) port ample valve capable of injecting a known volume of liquid at a pressure of at least 200 psi above the vapor pressure of the sample. The liquid sample was split onto each of the two columns. After passing through the column the sample gas passed through the individual detectors. The output of the FID and TCD were monitored using integrating computer software. The retention time and area of each peak was determined by the software. The identity of each peak was determined by comparing the retention time of the sample peak with the retention time determined by analyzing known standards.

The GC was calibrated using certified gas standards that contained known concentrations of the target compounds. Gas standards were supplied by a qualified gas vendor. The analyzed standards were acquired such that they are in the approximate range of the expected results.

A full test calibration was performed prior to the start of analysis. These initial calibration curves were used to calculate the concentration of the hydrocarbon and non-hydrocarbon compounds. Results of each compound were calculated by comparing the areas of the standards to the area of the gas sample using an average response factor.

3.5.2 Vent Gas Speciated Hydrocarbons - Method 18/25C

Collected canister samples were analyzed for speciated VOCs which included the PAMS standard list of compounds. In the laboratory, the sample canister vacuum was measured with a mercury manometer to verify there was no leakage during transport. The canister was then pressurized with zero nitrogen to approximately 206 kPa (30 psig) in preparation for analysis. The final tank pressure was measured with a mercury manometer and recorded.

Sample analysis was conducted using a Gas Chromatograph coupled with a Flame Ionization Detector (GC-FID). The GC was equipped with a gas sample valve to allow for automatic injection of sample gas onto the chromatographic column. The pressure of the sample tank purged the gas sample valve at a rate of approximately 0.1 liter per minute.

The output of the FID was monitored using integrating computer software. The retention time and area of each peak was determined by the software by comparing the retention time of the sample peak with the retention time determined by analyzing known standards.

The GC was calibrated using certified gas standards that contain known concentrations of the target compounds. Gas standards were supplied by a qualified gas vendor and diluted to lesser concentrations using a gas tight syringe and Tedlar bags. A minimum of three (3) standards of different concentrations were prepared and analyzed. The standards were prepared such that they bracket the expected concentration at the test location.

A full test calibration was performed prior to the start of analysis. These initial calibration curves were used to calculate the concentration of the VOC compounds. To verify the stability of the GC, the mid-range calibration point was re-analyzed at the conclusion of each analytical day.

Results of each compound were calculated by comparing the areas of the standards to the area of the gas sample using linear regression analysis or an average response factor. Results were expressed in ppm.

3.5.3 Vent Gas Methanol - Method 308

The samples were returned to Airtech and the silica gel tube will be opened and the contents placed in a five (5) ml glass vial. Three (3) ml of a 3% (v/v) n-propanol/water mixture were added to the vial to desorb the methanol from the silica gel. The vial was then shaken for 30 minutes.

Sample analysis will be conducted by GC-FID. The GC was equipped with a heated liquid injection port to allow for complete evaporation of the liquid and injection onto the chromatographic column. The primary analytical equipment is indicated in the tables below:

Equipment Information	Manufacturer	Model	Detector
Gas Chromatograph	Hewlett Packard	5890 Series II	FID
Analytical Column	Agilent Technologies	HP-Plot/Q	NA

GC FID Parameters	Conditions
Carrier Gas	Zero Nitrogen
Sample Volume (ul)	1
Sample Media	Water
Head Pressure (PSI)	20.0

The output of the FID was monitored using HP 3365 Chemstation integrating computer software. The retention time and area of each peak was determined by the software by comparing the retention time of the sample peak with the retention time determined by analyzing known standards.

The GC was calibrated with five (5) standards of methanol in water and also three (3) standards of methanol in 3% (v/v) n-propanol/water. The standards were prepared by dilution of Fisher brand HPLC grade methanol (Lot 104951) with deionized water or with 3% n-propanol in water.

Samples were injected into the GC using a liquid syringe. All sample analysis was performed in duplicate. The percent difference of the duplicate injections must be within five percent (5%) of the average.

Methanol results were calculated by comparing the areas of the standards to the area of the gas sample using linear regression analysis or an average response factor. Results were expressed in micrograms methanol in the impinger fraction and micrograms methanol in the silica gel tube fraction.

4 Process Description

4.1 Overview

Processed well fluids typically consist of varying amounts of oil, water and gas. The first step in processing these fluids is to split them up in their individual components. A three phase separator uses gravity to separate the components. In a horizontal separator fluid enters the vessel and hits an inlet diverter to perform the initial gross separation of liquid and vapor. The liquid collection section of the vessel must provide sufficient time for the oil and emulsion to form a layer above the water. A weir maintains the oil level while an interface controller maintains the water level. The oil spills over the top of the weir and a level controller, which operates the oil dump valve, controls its level. The oil is dumped to an on-site oil (condensate) tank. The interface controller senses the height of the water-oil interface and signals a water dump valve to release water from the vessel in order maintain the water-oil interface at the design height. The water is dumped into a closed top storage tank. The gas flows horizontal and exits through a mist eliminator and through a pressure control valve which maintains the vessel at constant pressure.

4.2 Process Data

During each test, the following process parameters were recorded by plant and Airtech personnel:

- Water pressure
- Water temperature
- Ambient temperature (hourly)
- Ambient pressure
- Daily water production

5 Appendix

5.1 Figures

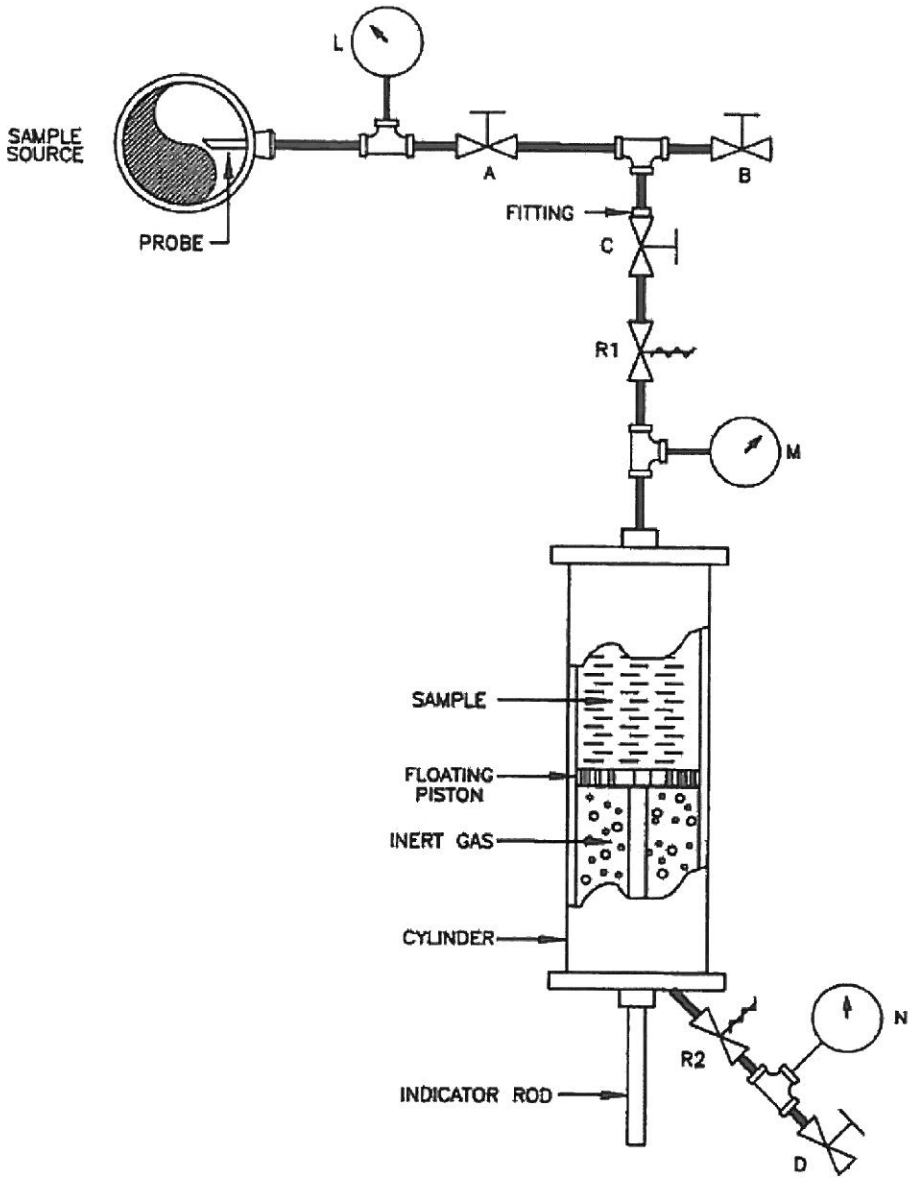

GPA 2174:
Pressurized Water Sampling Appratus

Figure 1

AIRTECH
Environmental Services Inc.

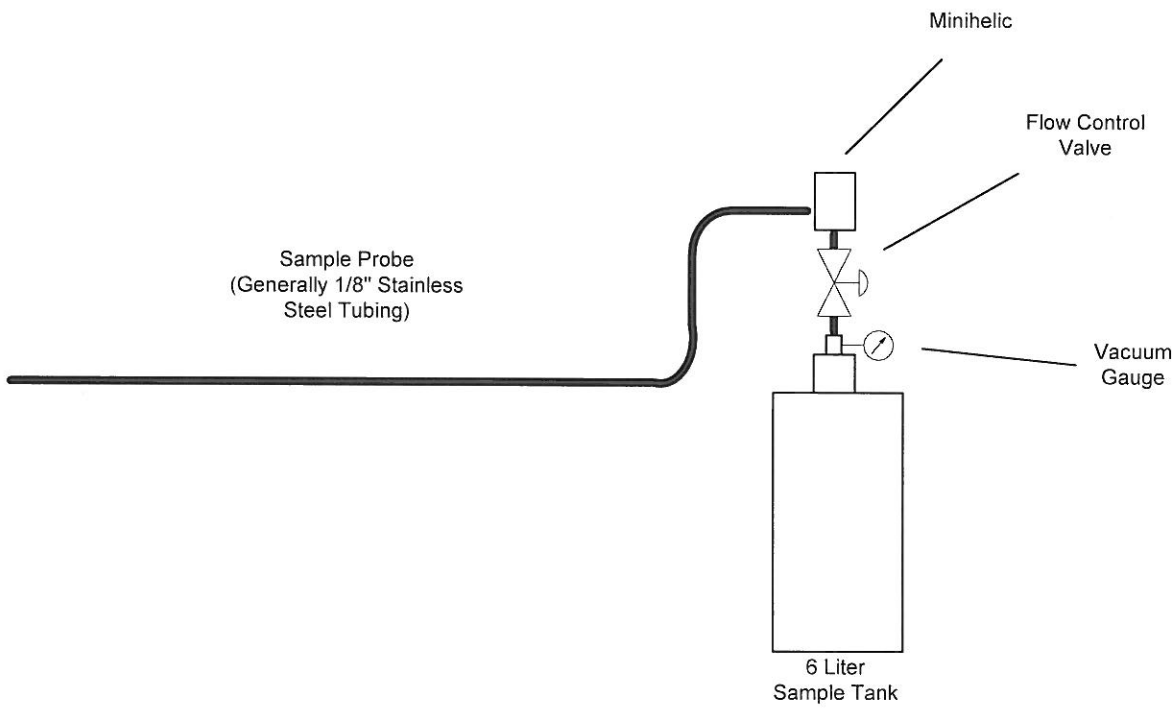

Method 18/25C:
Speciated Hydrocarbons Sampling Train

Figure 2

AIRTECH
Environmental
Services Inc.

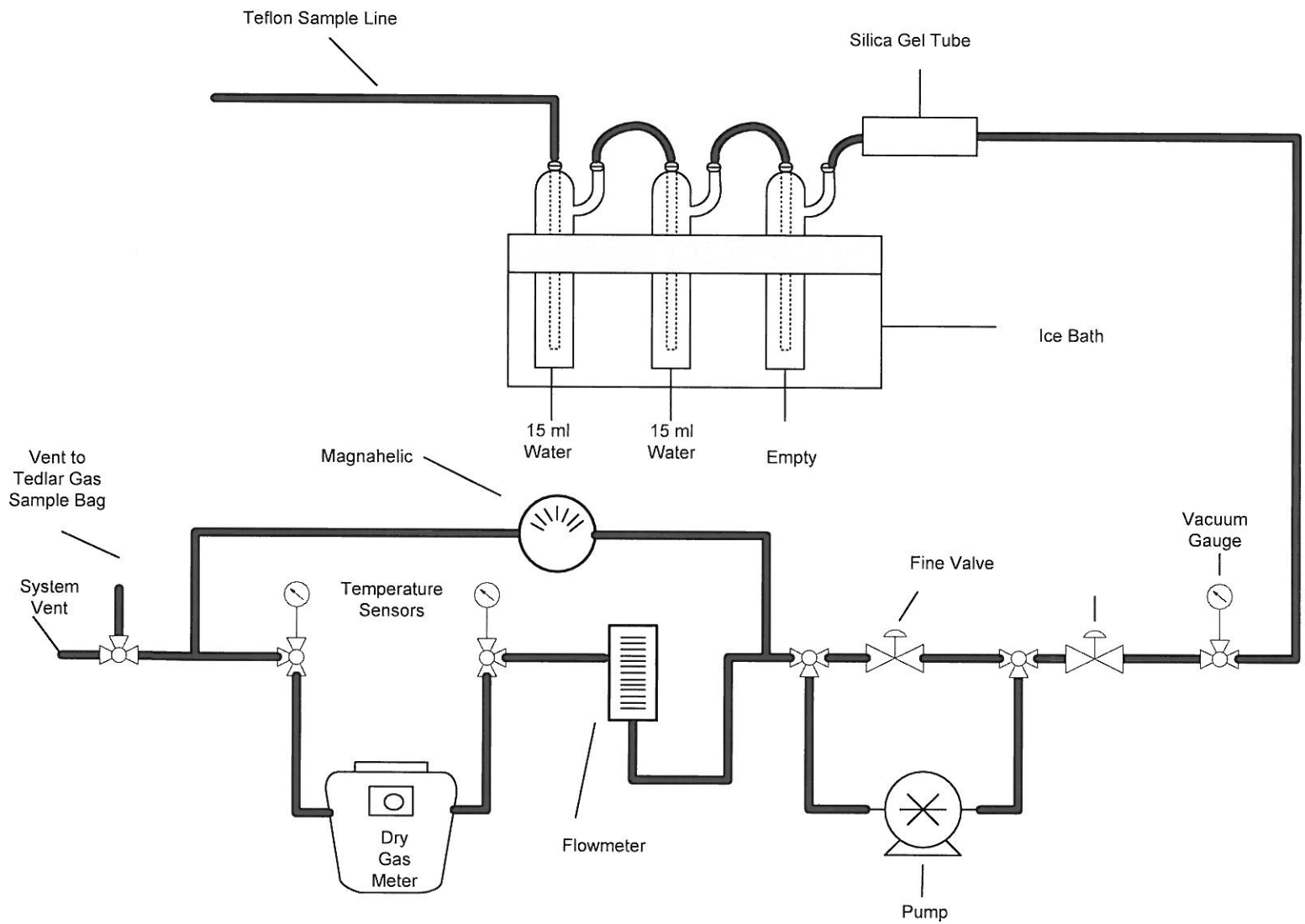

EPA Method 308:
Methanol Sampling Train

Figure 3

AIRTECH
Environmental
Services Inc.

5.2 Sample Calculations

Sample Calculations for Methods 2A and 18, Run 1, Site 1

Volumetric Flow of Gas Stream - Actual Conditions

$$Q_a = \left(\frac{V_{mf} - V_{mi}}{T} \right)$$

$$Q_a = \left(\frac{609{,}340 - 607{,}960}{8.16} \right)$$

$$Q_a = 171 acfh$$

where:

Q_a	= volumetric flow rate of the gas stream at actual conditions (acfh)
V_{mf}	= final volume meter reading (ft^3)
V_{mi}	= initial volume meter reading (ft^3)
T	= time of run (min)

Volumetric Flow of Gas Stream - Standard Conditions

$$Q_{std} = \frac{17.64(Q_a)(P_b)}{(T_s + 460)}$$

$$Q_{std} = \frac{17.64(171)(22.81)}{(46.2 + 460)}$$

$$Q_{std} = 136 scfh$$

where:

Q_{std}	= volumetric flow rate of the gas stream at standard conditions (scfh)
Q_a	= volumetric flow rate of the gas stream at actual conditions (acfh)
T_s	= average stack temperature (°F)
P_b	= barometric pressure (in. Hg)
17.64	= ratio of standard temperature over standard pressure (°R/in.Hg)
460	= conversion (°F to °R)

Volumetric Flow of Gas Stream - Standard Conditions

$$Q_{stdm} = \frac{Q_{std}}{60}$$

$$Q_{stdm} = \frac{136}{60}$$

$$Q_{stdm} = 2.26 scfm$$

where:

Q_{std} = volumetric flow rate of the gas stream at standard conditions (scfh)
Q_{stdm} = volumetric flow rate of the gas stream at standard conditions (scfm)
60 = conversion (min/hour)

VOC Emission Rate, as methane[3]

$$E_{VOC} = \frac{(C_{VOC})(MW)(Q_{std})(60)}{(385.3)(1{,}000{,}000)}$$

$$E_{VOC} = \frac{(227{,}196)(16.04)(2.26)(60)}{(385.3)(1{,}000{,}000)}$$

$$E_{VOC} = 1.29 lb/hr$$

where:

E_{VOC} = VOC emission rate (lb/hr)
C_{VOC} = VOC concentration in tank (ppmwv)
MW = molecular weight of methane (lb/lbmole)
Q_{std} = volumetric flow rate of the gas stream at dry standard conditions (scfm)
60 = conversion factor (min/hr)
385.3 = volume occupied by one pound of gas at standard conditions (dscf/lbmole)
1,000,000 = conversion factor (ppm to mole fraction)

[3] The emission rates of the specific HAP compounds were calculated in a similar manner using the appropriate concentration and molecular weight.

VOC Emission Rate, as methane [4]

$$E_{TPY} = \frac{(E_{VOC})(8{,}760)}{(2{,}000)}$$

$$E_{TPY} = \frac{(1.29)(8{,}760)}{(2{,}000)}$$

$$E_{TPY} = 5.63 tpy$$

where:

E_{TPY}	= VOC emission rate (tons/yr)
E_{VOC}	= VOC emission rate (lb/hr)
8,760	= conversion factor (hours/year)
2,000	= conversion factor (pounds/ton)

VOC Emission Factor

$$EF = \frac{(E_{VOC})}{W}$$

$$EF = \frac{(1.29)}{(3.55)}$$

$$EF = 0.362 lbs/bbl$$

where:

EF	= emission factor (lbs/bbl)
E_{VOC}	= VOC emission rate (lb/hr)
W	= water production rate (bbl/hour)

[4] The emission rates of the specific HAP compounds were calculated in a similar manner using the appropriate concentration and molecular weight.

Sample Calculations for Method 308, Run 1, Site 1

Volume of Dry Gas Collected Corrected to Standard Temperature and Pressure

$$V_{m(std)} = \frac{17.64(V_m)(Y_d)(P_b)}{(T_m + 460)}$$

$$V_{m(std)} = \frac{17.64(131.10)(0.9974)(22.81)}{(47.0 + 460)}$$

$$V_{m(std)} = 103.8l$$

where:

$V_{m(std)}$ = volume of gas collected at standard temperature and pressure (l)
V_m = volume of gas sampled at meter conditions (l)
Y_d = gas meter correction factor (dimensionless)
P_b = barometric pressure (in. Hg)
T_m = average gas meter temperature (°F)
17.64 = ratio of standard temperature over standard pressure (°R/in.Hg)
460 = conversion (°F to °R)

Methanol Concentration (lb/dscf)

$$C_{lb/dscf} = \frac{(m)(28.31)}{(1{,}000)(453.6)(V_{mstd})}$$

$$C_{lb/dscf} = \frac{(< 4.92)(28.31)}{(1{,}000{,}000)(453.6)(103.8)}$$

$$C_{lb/dscf} =< 2.96 \times 10^{-9} lb/dscf$$

where:

$C_{lb/dscf}$ = methanol concentration (lb/dscf)
m = mass of methanol collected (ug)
28.31 = conversion factor (l/ft^3)
453.6 = conversion factor (g/lb)
1,000,000 = conversion factor (ug/g)
$V_{m(std)}$ = volume of gas collected at standard temperature and pressure (l)

Methanol Concentration (ppm)

$$C_{ppm} = \frac{\left(C_{lb/dscf}\right)\left(385.3\right)\left(10^6\right)}{\left(MW\right)}$$

$$C_{ppm} = \frac{\left(< 2.96 \times 10^{-9}\right)\left(385.3\right)\left(10^6\right)}{\left(32.04\right)}$$

$$C_{ppm} =< 0.0356\, ppm$$

where:

C_{ppm}	= methanol concentration (ppm)
$C_{lb/dscf}$	= methanol concentration (lb/dscf)
385.3	= conversion factor (ft^3/lb-mole)
10^6	= conversion factor (ppm)
MW	= molecular weight of methanol (lb/lb-mole)

5.3 Parameters

Parameters	Run 1	Run 2	Run 3
Date	6/17/14	6/17/14	6/17/14
Start Time - Method 308	9:05	11:23	14:30
Stop Time - Method 308	11:05	13:23	16:30
Method 2A			
Start Volume V_m (ft^3)	607,960		
End Volume V_m (ft^3)	609,340		
Run Time (hours)	8.16		
Gas Temperature, T_m (^oF)	46.2		
Method 308			
Barometric Pressure, P_b (Inches Hg)	22.81	22.81	22.81
Volume Metered, V_m (L)	131.10	149.00	139.95
Meter Temperature, T_m (^oF)	47.0	47.5	42.2
Average Sample Pressure, ΔH_{avg} (in. H_2O)	0.00	0.00	0.00
Gas Meter Correction Factor, Y_d	0.9974	0.9974	0.9974
Run Time, θ (minutes)	120	120	120
Methanol Collected in Water (ug)	<4.92	4,186	4,896
Methanol Collected in SG Front (ug)	62.4	85.6	77.2
Methanol Collected in SG Back (ug)	32.0	42.4	36.6

RESULTS

Method 2A			
Volume Method 2A, $V_{m(std)}$ (ft^3)	1,097		
Volumetric Flow Rate (acfh)	171		
Volumetric Flow Rate (scfh)	136		
Volumetric Flow Rate (scfm)	2.26		
Method 308			
Volume Metered, $V_{m(std)}$ (L)	103.8	117.8	111.8
Total Methanol Collected (ug)	99.3	4,314	5,010
Methanol Concentration (lb/dscf)	5.97E-08	2.28E-06	2.80E-06
Methanol Concentration (ppm)	0.718	27.5	33.6

WDEQ

Pressurized Water Analysis Parameters
Site 1

Project No. 4572

Test Parameters	**Pre**	**Post**	**Average**
Produced Water (bbl/hr)	3.55	3.55	**3.55**
Specific Gravity	1.0002	0.9999	**1.0001**
Total VOC			
Total (mass %)	100	100	**100**
Water (mass %)	99.8847	99.9584	**99.9216**
Nitrogen (Air) (mass %)	0.0000	0.0000	**0.0000**
Carbon Dioxide (mass %)	0.0000	0.0000	**0.0000**
Methane (mass %)	0.0100	0.0053	**0.0077**
Total HAPs			
Total BTEX (mass %)	0.0189	0.0108	**0.0149**
N-Hexane (mass %)	0.0010	0.0002	**0.0006**
Methanol (mass %)	0.0069	0.0144	**0.0107**

VOC and HAP Results			
Total VOC (mass %)	0.1053	0.0363	**0.0708**
Total VOC (lb/hr)	1.31	0.452	**0.881**
Total VOC (lbs/bbl)	0.369	0.127	**0.248**
Total HAPs (mass %)	0.0268	0.0254	**0.0261**
Total HAPs (lb/hr)	0.333	0.316	**0.325**
Total HAPs (lbs/bbl)	0.0940	0.0890	**0.0915**

Method 2A and 308 Parameters
Site 2

Parameters	Run 1	Run 2	Run 3
Date	6/18/14	6/18/14	6/18/14
Start Time - Method 308	8:30	11:15	14:30
Stop Time - Method 308	10:30	13:15	16:30
Method 2A			
Start Volume V_m (ft^3)	613,784		
End Volume V_m (ft^3)	614,991		
Run Time (hours)	8.00		
Gas Temperature, T_m (^oF)	52.4		
Method 308			
Barometric Pressure, P_b (Inches Hg)	22.91	22.91	22.91
Volume Metered, V_m (L)	155.30	128.65	135.95
Meter Temperature, T_m (^oF)	56.5	53.7	52.0
Average Sample Pressure, ΔH_{avg} (in. H_2O)	0.00	0.000	0.00
Gas Meter Correction Factor, Y_d	0.9974	0.9974	0.9974
Run Time, θ (minutes)	120	120	120
Methanol Collected in Water (ug)	223,560	66,650	23,465
Methanol Collected in SG Front (ug)	3,909	1,191	375
Methanol Collected in SG Back (ug)	2,142	535	21
RESULTS			
Method 2A			
Volume Method 2A, $V_{m(std)}$ (ft^3)	952		
Volumetric Flow Rate (acfh)	153		
Volumetric Flow Rate (scfh)	120		
Volumetric Flow Rate (scfm)	2.01		
Method 308			
Volume Metered, $V_{m(std)}$ (L)	121.2	100.9	107.0
Total Methanol Collected (ug)	229,611	68,376	23,861
Methanol Concentration (lb/dscf)	1.18E-04	4.23E-05	1.39E-05
Methanol Concentration (ppm)	1,422	508	167

Produced Water Parameters
Site 2

Test Parameters	Pre	Post	Average
Produced Water (bbl/hr)	4.38	4.38	**4.38**
Specific Gravity	1.0002	0.9997	**1.0000**
Total VOC			
Total (mass %)	100	100	**100**
Water (mass %)	99.9168	99.8863	**99.9016**
Nitrogen (Air) (mass %)	0.0000	0.0000	**0.0000**
Carbon Dioxide (mass %)	0.0000	0.0000	**0.0000**
Methane (mass %)	0.0053	0.0117	**0.0085**
Total HAPs			
Total BTEX (mass %)	0.0186	0.0259	**0.0223**
N-Hexane (mass %)	0.0010	0.0010	**0.0010**
Methanol (mass %)	0.0118	0.0157	**0.0138**

VOC and HAP Results			
Total VOC (mass %)	0.0779	0.1020	**0.0899**
Total VOC (lb/hr)	1.20	1.57	**1.38**
Total VOC (lbs/bbl)	0.273	0.357	**0.315**
Total HAPs (mass %)	0.0314	0.0426	**0.0370**
Total HAPs (lb/hr)	0.483	0.654	**0.568**
Total HAPs (lbs/bbl)	0.110	0.149	**0.130**

Parameters	Run 1	Run 2	Run 3
Date	6/19/14	6/19/14	6/19/14
Start Time - Method 308	9:30	12:30	15:00
Stop Time - Method 308	11:30	14:30	17:00
Method 2A			
Start Volume V_m (ft^3)	617,940		
End Volume V_m (ft^3)	618,910		
Run Time (hours)	8.00		
Gas Temperature, T_m (^oF)	63.8		
Method 308			
Barometric Pressure, P_b (Inches Hg)	23.04	23.04	23.04
Volume Metered, V_m (L)	142.30	134.70	135.05
Meter Temperature, T_m (^oF)	53.4	66.4	76.5
Average Sample Pressure, ΔH_{avg} (in. H_2O)	0.00	0.000	0.00
Gas Meter Correction Factor, Y_d	0.9974	0.9974	0.9974
Run Time, θ (minutes)	120	120	120
Methanol Collected in Water (ug)	82.8	<3.24	69.7
Methanol Collected in SG Front (ug)	4.31	4.05	3.27
Methanol Collected in SG Back (ug)	3.89	3.04	3.09
RESULTS			
Method 2A			
Volume Method 2A, $V_{m(std)}$ (ft^3)	753		
Volumetric Flow Rate (acfh)	123		
Volumetric Flow Rate (scfh)	95.5		
Volumetric Flow Rate (scfm)	1.59		
Method 308			
Volume Metered, $V_{m(std)}$ (L)	112.4	103.7	102.0
Total Methanol Collected (ug)	91.0	10.3	76.1
Methanol Concentration (lb/dscf)	5.06E-08	6.22E-09	4.65E-08
Methanol Concentration (ppm)	0.608	0.0747	0.559

Pressurized Water Analysis Parameters
Site 3

Test Parameters	**Pre**	**Post**	**Average**
Produced Water (bbl/hr)	1.00	NA	**1.00**
Specific Gravity	0.9990	NA	**0.9990**
Total VOC			
Total (mass %)	100	NA	**100**
Water (mass %)	99.9320	NA	**99.9320**
Nitrogen (Air) (mass %)	0.0000	NA	**0.0000**
Carbon Dioxide (mass %)	0.0000	NA	**0.0000**
Methane (mass %)	0.0470	NA	**0.0470**
Total HAPs			
Total BTEX (mass %)	0.0078	NA	**0.0078**
N-Hexane (mass %)	0.0003	NA	**0.0003**
Methanol (mass %)	0.0000	NA	**0.0000**
VOC and HAP Results			
Total VOC (mass %)	0.0210	NA	**0.0210**
Total VOC (lb/hr)	0.0735	NA	**0.0735**
Total VOC (lbs/bbl)	0.0735	NA	**0.0735**
Total HAPs (mass %)	0.0081	NA	**0.0081**
Total HAPs (lb/hr)	0.0284	NA	**0.0284**
Total HAPs (lbs/bbl)	0.0284	NA	**0.0284**

Parameters	Run 1	Run 2	Run 3
Date	6/23/14	6/23/14	6/23/14
Start Time - Method 308	10:15	13:00	15:40
Stop Time - Method 308	12:15	15:00	17:40
Method 2A			
Start Volume V_m (ft^3)	632,344		
End Volume V_m (ft^3)	632,805		
Run Time (hours)	7.85		
Gas Temperature, T_m (^oF)	70.5		
Method 308			
Barometric Pressure, P_b (Inches Hg)	22.86	22.81	22.81
Volume Metered, V_m (L)	108.40	112.85	112.99
Meter Temperature, T_m (^oF)	73.4	82.5	74.6
Average Sample Pressure, ΔH_{avg} (in. H_2O)	0.00	0.000	0.00
Gas Meter Correction Factor, Y_d	0.9974	0.9974	0.9974
Run Time, θ (minutes)	120	120	120
Methanol Collected in Water (ug)	132	112	<6.16
Methanol Collected in SG Front (ug)	2.99	1.75	1.79
Methanol Collected in SG Back (ug)	2.64	2.03	3.13

RESULTS

Method 2A			
Volume Method 2A, $V_{m(std)}$ (ft^3)	350		
Volumetric Flow Rate (acfh)	60.2		
Volumetric Flow Rate (scfh)	45.8		
Volumetric Flow Rate (scfm)	0.763		
Method 308			
Volume Metered, $V_{m(std)}$ (L)	81.7	83.7	84.8
Total Methanol Collected (ug)	138	116	11.1
Methanol Concentration (lb/dscf)	1.05E-07	8.64E-08	8.15E-09
Methanol Concentration (ppm)	1.26	1.04	0.0980

WDEQ

Produced Water Analysis Parameters
Site 4

Project No. 4572

Test Parameters	Pre	Post	Average
Produced Water (bbl/hr)	0.334	0.334	**0.334**
Specifc Gravity	1.0000	0.9999	**1.0000**
Total VOC			
Total (mass %)	100	100	**100**
Water (mass %)	99.9794	99.9862	**99.9828**
Nitrogen (Air) (mass %)	0.0000	0.0000	**0.0000**
Carbon Dioxide (mass %)	0.0000	0.0000	**0.0000**
Methane (mass %)	0.0010	0.0020	**0.0015**
Total HAPs			
Total BTEX (mass %)	0.0013	0.0021	**0.0017**
N-Hexane (mass %)	0.0001	0.0001	**0.0001**
Methanol (mass %)	0.0003	0.0000	**0.0002**

VOC and HAP Results			
Total VOC (mass %)	0.0196	0.0118	**0.0157**
Total VOC (lb/hr)	0.0229	0.0138	**0.0184**
Total VOC (lbs/bbl)	0.0687	0.0414	**0.0550**
Total HAPs (mass %)	0.0017	0.0022	**0.0020**
Total HAPs (lb/hr)	0.00199	0.00258	**0.00228**
Total HAPs (lbs/bbl)	0.00596	0.00771	**0.00683**

Parameters	Run 1	Run 2	Run 3
Date	6/25/14	6/25/14	6/25/14
Start Time - Method 308	10:10	13:05	16:30
Stop Time - Method 308	12:10	15:05	18:30
Method 2A			
Start Volume V_m (ft^3)	638,023		
End Volume V_m (ft^3)	639,393		
Run Time (hours)	8.00		
Gas Temperature, T_m (^oF)	72.0		
Method 308			
Barometric Pressure, P_b (Inches Hg)	23.09	23.09	22.99
Volume Metered, V_m (L)	116.85	115.10	131.75
Meter Temperature, T_m (^oF)	78.8	71.7	77.2
Average Sample Pressure, ΔH_{avg} (in. H_2O)	0.00	0.000	0.00
Gas Meter Correction Factor, Y_d	0.9974	0.9974	0.9974
Run Time, θ (minutes)	120	120	120
Methanol Collected in Water (ug)	<6.53	<5.98	<4.87
Methanol Collected in SG Front (ug)	3.78	3.28	4.28
Methanol Collected in SG Back (ug)	1.92	2.50	2.74

RESULTS			
Method 2A			
Volume Method 2A, $V_{m(std)}$ (ft^3)	1,049		
Volumetric Flow Rate (acfh)	173		
Volumetric Flow Rate (scfh)	132		
Volumetric Flow Rate (scfm)	2.21		
Method 308			
Volume Metered, $V_{m(std)}$ (L)	88.1	87.9	99.2
Total Methanol Collected (ug)	12.2	11.8	11.9
Methanol Concentration (lb/dscf)	8.66E-09	8.35E-09	7.48E-09
Methanol Concentration (ppm)	0.104	0.100	0.0900

WDEQ

Produced Water Analysis Parameters
Site 5

Project No. 4572

Test Parameters	**Pre**	**Post**	**Average**
Produced Water (bbl/hr)	0.716	0.716	**0.716**
Specifc Gravity	1.0004	1.0004	**1.0004**
Total VOC			
Total (mass %)	100	100	**100**
Water (mass %)	99.9527	99.9512	**99.9520**
Nitrogen (Air) (mass %)	0.0000	0.0000	**0.0000**
Carbon Dioxide (mass %)	0.0000	0.0000	**0.0000**
Methane (mass %)	0.0008	0.0016	**0.0012**
Total HAPs			
Total BTEX (mass %)	0.0049	0.0068	**0.0059**
N-Hexane (mass %)	0.0005	0.0008	**0.0007**
Methanol (mass %)	0.0000	0.0000	**0.0000**
VOC and HAP Results			
Total VOC (mass %)	0.0465	0.0472	**0.0469**
Total VOC (lb/hr)	0.117	0.119	**0.118**
Total VOC (lbs/bbl)	0.163	0.166	**0.164**
Total HAPs (mass %)	0.0054	0.0076	**0.0065**
Total HAPs (lb/hr)	0.0136	0.0191	**0.0163**
Total HAPs (lbs/bbl)	0.0189	0.0266	**0.0228**

Parameters	Run 1	Run 2	Run 3
Date	6/26/14	6/26/14	6/26/14
Start Time - Method 308	9:00	11:50	14:30
Stop Time - Method 308	11:00	13:50	16:30
Method 2A			
Start Volume V_m (ft^3)	641,319		
End Volume V_m (ft^3)	646,510		
Run Time (hours)	8.00		
Gas Temperature, T_m (^oF)	63.5		
Method 308			
Barometric Pressure, P_b (Inches Hg)	23.12	23.12	23.12
Volume Metered, V_m (L)	160.63	161.65	124.58
Meter Temperature, T_m (^oF)	74.4	89.9	80.6
Average Sample Pressure, ΔH_{avg} (in. H_2O)	0.00	0.000	0.00
Gas Meter Correction Factor, Y_d	0.9974	0.9974	0.9974
Run Time, θ (minutes)	120	120	120
Methanol Collected in Water (ug)	3,047	8,881	6,841
Methanol Collected in SG Front (ug)	39.6	76.4	36.1
Methanol Collected in SG Back (ug)	14.0	32.9	18.0

RESULTS			
Method 2A			
Volume Method 2A, $V_{m(std)}$ (ft^3)	4,044		
Volumetric Flow Rate (acfh)	651		
Volumetric Flow Rate (scfh)	507		
Volumetric Flow Rate (scfm)	8.45		
Method 308			
Volume Metered, $V_{m(std)}$ (L)	122.3	119.6	93.7
Total Methanol Collected (ug)	3,101	8,990	6,895
Methanol Concentration (lb/dscf)	1.58E-06	4.69E-06	4.59E-06
Methanol Concentration (ppm)	19.0	56.4	55.2

Produced Water Analysis Parameters
Site 6

Test Parameters	Pre	Post	Average
Produced Water (bbl/hr)	26.3	26.3	**26.3**
Specific Gravity	1.0000	1.0001	**1.0001**
Total VOC			
Total (mass %)	100	100	**100**
Water (mass %)	99.9568	99.9606	**99.9587**
Nitrogen (Air) (mass %)	0.0000	0.0000	**0.0000**
Carbon Dioxide (mass %)	0.0000	0.0000	**0.0000**
Methane (mass %)	0.0024	0.0009	**0.0017**
Total HAPs			
Total BTEX (mass %)	0.0092	0.0040	**0.0066**
N-Hexane (mass %)	0.0004	0.0002	**0.0003**
Methanol (mass %)	0.0093	0.0198	**0.0146**

VOC and HAP Results			
Total VOC (mass %)	0.0408	0.0385	**0.0397**
Total VOC (lb/hr)	3.75	3.54	**3.65**
Total VOC (lbs/bbl)	0.143	0.135	**0.139**
Total HAPs (mass %)	0.0189	0.0240	**0.0215**
Total HAPs (lb/hr)	1.74	2.21	**1.97**
Total HAPs (lbs/bbl)	0.0662	0.0841	**0.0752**

Parameters	Run 1	Run 2	Run 3
Date	6/27/14	6/27/14	6/27/14
Start Time - Method 308	8:40	11:15	13:35
Stop Time - Method 308	10:40	13:15	15:35
Method 2A			
Start Volume V_m (ft^3)	649,409		
End Volume V_m (ft^3)	650,666		
Run Time (hours)	8.00		
Gas Temperature, T_m (^oF)	58.0		
Method 308			
Barometric Pressure, P_b (Inches Hg)	22.71	22.71	22.71
Volume Metered, V_m (L)	128.89	127.89	129.12
Meter Temperature, T_m (^oF)	59.8	63.8	65.3
Average Sample Pressure, ΔH_{avg} (in. H_2O)	0.00	0.000	0.00
Gas Meter Correction Factor, Y_d	0.9974	0.9974	0.9974
Run Time, θ (minutes)	120	120	120
Methanol Collected in Water (ug)	76,928	191,575	112,015
Methanol Collected in SG Front (ug)	187	709	371
Methanol Collected in SG Back (ug)	90.5	338	162

RESULTS			
Method 2A			
Volume Method 2A, $V_{m(std)}$ (ft^3)	972		
Volumetric Flow Rate (acfh)	159		
Volumetric Flow Rate (scfh)	123		
Volumetric Flow Rate (scfm)	2.05		
Method 308			
Volume Metered, $V_{m(std)}$ (L)	99.1	97.6	98.2
Total Methanol Collected (ug)	77,206	192,622	112,548
Methanol Concentration (lb/dscf)	4.86E-05	1.23E-04	7.15E-05
Methanol Concentration (ppm)	585	1,482	860

Method 2A and 308 Parameters
Site 7

Test Parameters	**Pre**	**Post**	**Average**
Produced Water (bbl/hr)	<0.139	<0.139	**<0.139**
Specific Gravity	NA	0.9964	**0.9964**
Total VOC			
Total (mass %)	NA	100	**100**
Water (mass %)	NA	98.5498	**98.5498**
Nitrogen (Air) (mass %)	NA	0.0000	**0.0000**
Carbon Dioxide (mass %)	NA	0.0000	**0.0000**
Methane (mass %)	NA	0.0027	**0.0027**
Total HAPs			
Total BTEX (mass %)	NA	0.0078	**0.0078**
N-Hexane (mass %)	NA	0.0001	**0.0001**
Methanol (mass %)	NA	1.4031	**1.4031**

VOC and HAP Results			
Total VOC (mass %)	NA	1.4475	**1.4475**
Total VOC (lb/hr)	NA	0.704	**0.704**
Total VOC (lbs/bbl)	NA	5.06	**5.06**
Total HAPs (mass %)	NA	1.41	**1.41**
Total HAPs (lb/hr)	NA	0.686	**0.686**
Total HAPs (lbs/bbl)	NA	4.93	**4.93**

5.4 Field Data Printouts: Available upon request to AQD

5.5 Field Data: Available upon request to AQD

5.6 Laboratory Data: Available upon request to AQD

5.7 Calibration Data

Dattus™ Basic fM2 & fM3

Commercial & Industrial Gas Meters

Applications

The Dattus meter is a highly accurate solid-state gas meter suited for commercial & industrial gas measurement applications for flow rates from 1,000 to 56,000 actual cubic feet per hour (acfh). With no moving parts, the Dattus meter is ideal for applications where continuous gas flow to the customer is required

Features

- Static Measurement Technology
- Gas Volume Totalizing
- Data Logging Available
- Fixed-factor Pressure Correction
- Configurable Pulse Outputs
- Capacity Sizes from 1 M through 56M
- Field Upgrading of Meter Capacity Without Service Interruption
- 8-11 Years Battery Life (Average Usage)
- Configurable Index Orientation
- Modbus Communication

fM2

fM3

Fluidic Operation Principle

Description

The operation of the Dattus meter, (see figure 1 on the right), is based on the fluidic oscillation principle The measurement unit is comprised of three functional elements

- ▶ **Flow conditioner**
- ▶ **Jet nozzle formation**
- ▶ **Fluidic oscillator chamber**

Gas enters (1) the meter and divides into two separate flow paths (2). These two paths recombine (3) as they exit the flow conditioner and enter the fluidic oscillation chamber through the nozzle The process of dividing the flows eliminates upstream disturbances and creates well-conditioned flow.

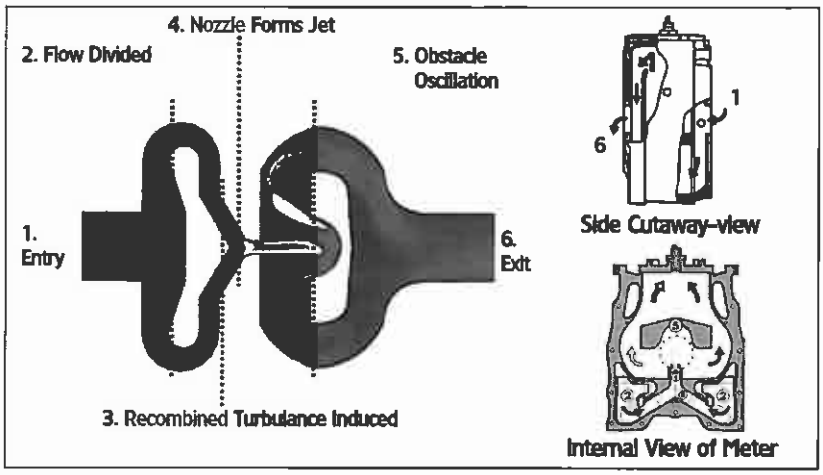

Figure 1

In the fluidic oscillation chamber, a jet is formed (4) as the gas enters through the nozzle. The jet then starts oscillating back and forth (5). Thermal sensors, located just after the nozzle, detect a temperature variance as the gas jet passes from one side to the other The volume of gas passed through the meter is obtained by counting the number of oscillations detected by the sensors

Advantages

Operational –

Safety - Because the Dattus uses solid-state technology (no moving parts), the meter cannot "lock up" or stop gas flow. This may be necessary in some applications such as hospitals, schools, or other applications where continuous gas service may be critical

Robustness - The Dattus meter may be subjected to flow rates many times its rated capacity without any damage to the meter, only an alarm displayed letting the user know the meter was in an "overflow" condition The Dattus will measure normally once the flow is within its operating range Reduced failures due to contamination in the gas.

Application – Without mechanical elements impeding gas flow, the meter performs very well in applications where slam-shut or slam-open equipment is used The Dattus does not create pulsations that can affect pressure regulator performance.

Ease of Installation – Having completely aligned flanges is not necessary, nor is leveling of the meter Neither torsion on the meter case or a non-level setting will affect meter performance

Maintenance – Because the Dattus meter doesn't have any rotating or moving parts, there are no associated maintenance requirements, such as oil changes that may be required for other meter types Batteries are the only regular maintenance item required for Dattus, (8-11 years typical, depending on meter configuration)

Differential – The differential pressure across the meter is related to the flow rate through the meter and does not change during the life of the meter The accuracy of the meter is not affected by the differential Differential testing may be used to verify the accuracy of the Dattus meter

Feature Details

▶ Pulse Outputs

- 4 pulse output channels
- Form A type
- Selectable between Uncorrected Volume, Corrected Volume (Fixed Factor Pressure), or Alarm Outputs
- Programmable volume pulse weights
- Programmable pulse width (0.010 seconds to 175 seconds) or use 50% duty cycle
- Compatible with most AMR devices and volume correctors

▶ Data Logging

- Data logging/Audit trail is an available option
- 3100 records are available that can be allocated between hourly, daily, and monthly logs
- In addition, a high frequency logger is available (up to 500 records), with a selectable logging intervals between 30 seconds and 30 minutes
- Items logged include Uncorrected Volume, Corrected Volume (Fixed Factor Pressure), and maximum flow rate during interval
- Data accessible via the Dattus PC Link software and exportable to Microsoft Excel

▶ Event Logging

- 512 event records in a circular log
- 62 items in a last occurrence log
- Records both user and system events
- User events – Records who, what, and when for configurations changes, as well as the old and new values
- System events – Time & Date stamp of alarms
- May be accessed via PC Link software and exported to Microsoft Excel

▶ Modbus Communications

- Dattus can communicate via Modbus RTU protocol. It is designed to be compatible with SCADA and other equipment that communicates via Modbus

▶ LCD

- Uncorrected Volume or Fixed Pressure Corrected Volume displayable
- Programmable Display (4,5, or 6 Digits)
- Flow Indicator – rolling icons on the LCD that move proportional to the flow rate through meter
- Alarm Indications for battery, overflow, or sensor alarms

▶ Upgradeability

- The Dattus flow rate can be field converted to a larger flow rate capacity within the same model size (i.e fM2 or fM3)
- Conversion is accomplished with a simple software key (e.g. For example a Dattus 2M could be field converted to a 5M if customer load demands it)
- No shutting the customer down or putting on bypass, no re-piping, etc.
- Data logging can also be enabled via software key

Construction

Measurement Unit	Cast aluminum A356T6
External Cover	ASA (Acrylonitrile Styrene Acrylate)
Index Housing	UV stabilized polycarbonate

▶ Dattus Dimensions (Inches)

Model	A	B	C	D	Thread Depth
fM12	16.5"	10.6"	6.75"	10.0"	1.00"
fM13	23.7"	16.5"	9.5"	15.2"	1.00"

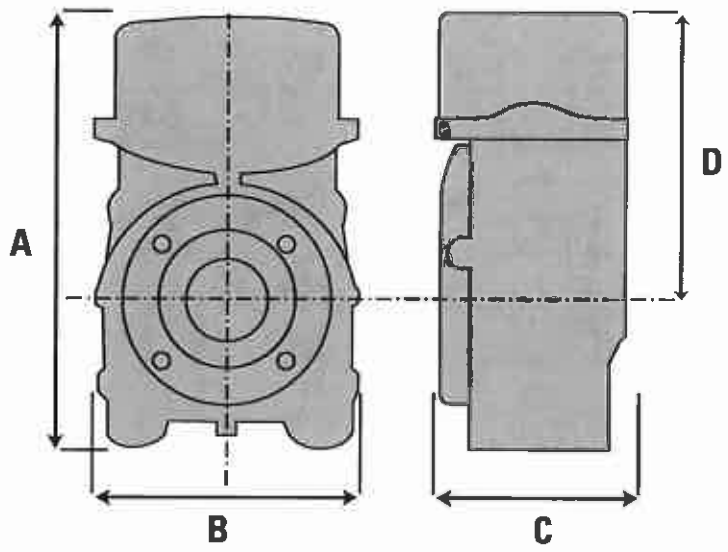

Model	Flange Type	Bolt Pattern Diameter*
fM12	ANSI 125 2"	4.75"
fM12	ANSI 125 3"	6.00"
fM13	ANSI 125 4"	7.50"

Note Flanges receive 1-3/4" x 5/8" -11 UNC 2B Bolts

Meter Specifications - fM2

Dattus fM Meter	Flange Size	Units	fM2 1M	fM2 1.5M	fM2 2M	fM2 3M	fM2 5M	fM2 7M	fM2 11M
Rated Capacity	-	acfh (m^3)	1000 (28 3)	1500 (42 5)	2000 (56 6)	3000 (85 0)	5000 (141 6)	7000 (198 2)	11000 (311 5)
Maximum Capacity*	-	acfh (m^3)	1250 (35 4)	1875 (531)	2500 (70 8)	3750 (106 2)	6250 (177 0)	8750 (247 8)	13750 (389 4)
MAOP	-	psig (bar)	150 (10 3)	150 (10 3)	150 (10 3)	150 (10 3)	150 (10 3)	150 (10 3)	150 (10 3)
Dynamic Range +/- 1%	-	ratio	17 1	25 1	33 1	50 1	83 1	116 1	183 1
Dynamic Range +/- 2%	-	ratio	45 1	68 1	91 1	136 1	227 1	318 1	500 1
Flow Rate, 0 5" wc (1 24 mbar), Gas	2" FL	acfh (m^3)	**	**	**	2457 (69 6)	2457 (69 6)	2457 (69 6)	2457 (69 6)
	3" FL	acfh (m^3)	**	**	**	2750 (779)	2750 (779)	2750 (779)	2750 (779)
Flow Rate, 1 0" wc (2 49 mbar), Gas	2" FL	acfh (m^3)	**	**	**	**	3481 (98 6)	3481 (98 6)	3481 (98 6)
	3" FL	acfh (m^3)	**	**	**	**	3871 (109 6)	3871 (109 6)	3871 (109 6)
Flow Rate, 2 0" wc (4 98 mbar), Gas	2" FL	acfh (m^3)	**	**	**	**	4918 (139)	4918 (139)	4918 (139)
	3" FL	acfh (m^3)	**	**	**	**	5535 (157)	5535 (157)	5535 (157)
Pressure Drop at Rated Capacity	2" FL	in wc (mbar)	0 09 (0 22)	019 (0 47)	0 33 (0 82)	0 75 (1 87)	2 06 (5.1)	3.89 (97)	9 25 (23)
	3" FL	in wc (mbar)	0 05 (0.12)	014 (0 35)	0 26 (0 65)	0 61 (1 52)	1.64 (41)	314 (78)	755 (18 8)
Flange Connection size	-	inches	2" or 3"	2" or 3"	2" or 3"	2" or 3"	2" or 3"	2" or 3"	2" or 3"
Flange to Flange Dimensions	-	inches	6 3/4	6 3/4	6 3/4	6 3/4	6 3/4	6 3/4	6 3/4
Weight	-	lbs (kg)	37 (16 8)	37 (16 8)	37 (16 8)	37 (16 8)	37 (16 8)	37 (16 8)	37 (16 8)
Shipping Weight	-	lbs (kg)	42 (191)	42 (191)	42 (191)	42 (191)	42 (191)	42 (191)	42 (191)

* The Dattus fM2 may be run at up to 25% over its rated capacity and still maintain accurate measurement
** Flow rate at stated pressure drop is higher than the rated capacity of meter

Meter Sizing - fM2

Meter Size	fM2 1M	fM2 1.5M	fM2 2M	fM2 3M	fM2 5M	fM2 7M	fM2 11M
Rated Capacity acfh (m3/h)	1000 (28 3)	1500 (42 5)	2000 (56 6)	3000 (85 0)	5000 (141 6)	7000 (198 2)	11000 (311 5)
Meter Pressure psig (Bar)	Metering Capacity in MSCFH (m^3/h)						
1 (0 07)	11 (30 2)	16 (45 4)	21 (60 5)	3 2 (90 7)	5 3 (151 2)	75 (211 7)	117 (332 6)
2 (014)	11 (32 2)	17 (48 2)	2 3 (64 3)	3 4 (96 5)	5 7 (160 8)	8 0 (225 1)	12 5 (353 8)
3 (0 21)	1.2 (341)	18 (511)	2 4 (68 2)	3 6 (102 3)	6 0 (170 4)	8 4 (238 6)	13 2 (374 9)
5 (0 34)	1 3 (379)	2 0 (56 9)	2 7 (75 9)	4 0 (113 8)	6 7 (189 6)	9 4 (265 5)	14 7 (417 2)
10 (0 69)	17 (475)	2 5 (71 3)	3 4 (951)	5 0 (142 6)	8 4 (237 7)	11 8 (332 8)	18 5 (523 0)
15 (1 03)	2 0 (57 2)	3 0 (85 7)	4 0 (114 3)	61 (171 5)	101 (285 8)	141(400 1)	22 2 (628 7)
20 (1 38)	2 4 (66 8)	3 5 (100 1)	4 7 (133 5)	71 (200 3)	11 8 (333 8)	16 5 (467 4)	25 9 (734 4)
25 (172)	2 7 (76 4)	4 0 (114 6)	5 4 (152 8)	81 (229 1)	13 5 (381 9)	18 9 (534 6)	29 7 (840 2)
45 (310)	41(114 8)	61(172 2)	81(229 7)	12 2 (344 5)	20 3 (574 1)	28 4 (803 8)	44 6 (1263 1)
60 (413)	51 (143 7)	76 (215 5)	101 (287 3)	15 2 (431 0)	25 4 (718 3)	35 5 (1005 6)	55 8 (1580 3)
90 (6 20)	71 (201 3)	10 7 (302 0)	14 2 (402 7)	21 3 (604 0)	35 5 (1006 7)	49 8 (1409 4)	78 2 (2214 7)
100 (6 89)	78 (220 6)	11 7 (330 8)	15 6 (441 1)	23 4 (661 7)	38 9 (1102 8)	54 5 (1543 9)	85 7 (2426 2)
150 (10 3)	11 2 (316 7)	16 8 (475 0)	22 4 (633 4)	33 5 (950 0)	55 9 (1583 4)	78 3 (2216 8)	123 0 (3483 5)

Meter Specifications - fM3

Dattus fM Meter	Units	fM3 7M	fM3 11M	fM3 16M	fM3 23M	fM3 38M	fM3 56M
Rated Capacity	acfh (m^3)	7000 (198 2)	11000 (311 5)	16000 (453)	23000 (651 3)	38000 (1076)	56000 (1585)
Maximum Capacity*	acfh (m^3)	8750 (2478)	13750 (389 4)	20000 (566 3)	28750 (8141)	47500 (1345)	57000 (1614)
MAOP	psig (bar)	175 (121)	175 (121)	175 (121)	175 (121)	175 (121)	175 (121)
Dynamic Range +/- 1%	ratio	70 1	110 1	160 1	230 1	380 1	560 1
Dynamic Range +/- 2%	ratio	117 1	183 1	267 1	383 1	633 1	933 1
Flow Rate, 0 5" wc (1 24 mbar), Gas	acfh (m^3)	6650 (188)	6650 (188)	6650 (188)	6650 (188)	6650 (188)	6650 (188)
Flow Rate, 1 0" wc (2 49 mbar), Gas	acfh (m^3)	**	9350 (265)	9350 (265)	9350 (265)	9350 (265)	9350 (265)
Flow Rate, 2 0" wc (4 98 mbar), Gas	acfh (m^3)	**	**	13150 (372)	13150 (372)	13150 (372)	13150 (372)
Pressure Drop at Rated Capacity	in wc (mbar)	0 55 (1 37)	1 39 (3 46)	2 98 (74)	6 18 (15 4)	17 37 (43)	37 73 (94)
Flange Connection size	inches	4"	4"	4"	4"	4"	4"
Flange to Flange Dimensions	inches	9 1/2	9 1/2	9 1/2	9 1/2	9 1/2	9 1/2
Weight	lbs (kg)	114 (51 7)	114 (51 7)	114 (51 7)	114 (51 7)	114 (51 7)	114 (51 7)
Shipping Weight	lbs (kg)	128 (58 1)	128 (58 1)	128 (58 1)	128 (58 1)	128 (58 1)	128 (58 1)

* The Dattus Meter may be run at up to 25% over its rated capacity and still maintain accurate measurement, except for the 56M with has a maximum of 57,000 acfh (1614 m3/h)
** Flow rate at stated pressure drop is higher than the rated capacity of meter

Meter Sizing - fM3

Meter Size	fM3 7M	fM3 11M	fM3 16M	fM3 23M	fM3 38M	fM3 56M
Rated Capacity acfh (m3/h)	7000 (198 2)	11000 (311 5)	16000 (453 1)	23000 (651 3)	38000 (1076 1)	56000 (1585 8)
Meter Pressure psig (Bar)	Metering Capacity in MSCFH (m^3/h)					
1 (0 07)	7 5 (211 7)	11 7 (332 6)	17 1 (483 8)	24 6 (695 5)	40 6 (1149 1)	
2 (0 14)	8 0 (225 1)	12 5 (353 8)	18 2 (514 6)	26 1 (739 7)	43 2 (1222 2)	63 6 (1801 1)
3 (0 21)	8 4 (238 6)	13 2 (374 9)	19 3 (545 4)	27 7 (783 9)	45 7 (1295 2)	67 4 (1908 7)
5 (0 34)	9 4 (265 5)	14 7 (417 2)	21 4 (606 9)	30 8 (872 4)	50 9 (1441 3)	75 0 (2124 1)
10 (0 69)	11 8 (332 8)	18 5 (523 0)	26 9 (760 7)	38 6 (1093 5)	63 8 (1806 6)	94 0 (2662 3)
15 (1 03)	14 1 (400 1)	22 2 (628 7)	32 3 (914 5)	46 4 (1314 5)	76 7 (2171 8)	113 0 (3200 6)
20 (1 38)	16 5 (467 4)	25 9 (734 4)	37 7 (1068 3)	54 2 (1535 6)	89 6 (2537 1)	132 0 (3738 9)
25 (1 72)	18 9 (534 6)	29 7 (840 2)	43 2 (1222 0)	62 0 (1756 7)	102 5 (2902 4)	151 0 (4277 2)
45 (3 10)	28 4 (803 8)	44 6 (1263 1)	64 9 (1837 2)	93 3 (2641 0)	154 1 (4363 4)	227 1 (6430 3)
60 (4 13)	35 5 (1005 6)	55 8 (1580 3)	81 2 (2298 6)	116 7 (3304 3)	192 8 (5459 2)	284 1 (8045 1)
90 (6 20)	49 8 (1409 4)	78 2 (2214 7)	113 8 (3221 4)	163 5 (4630 7)	270 2 (7650 8)	398 2 (11274 8)
100 (6 89)	54 5 (1543 9)	85 7 (2426 2)	124 6 (3529 0)	179 1 (5072 9)	296 0 (8381 3)	436 2 (12351 4)
150 (10 3)	78 3 (2216 8)	123 0 (3483 5)	178 9 (5066 9)	257 2 (7283 7)	425 0 (12033 9)	626 3 (17734 2)
175 (12 1)	90 2 (2553 2)	141 7 (4012 2)	206 1 (5835 9)	296 3 (8389 1)	489 5 (13860 2)	721 3 (20425 6)

Pressure loss across meter exceeds supply pressure
Pressure loss across meter in excess of 50% of supply pressure

Communications Software

The Dattus Meter can come factory configured as required by the customer with whatever display, pulse output, and fixed factor pressure configurations needed. It is not necessary to purchase software or communication cable in order to use the Dattus meter.

However, by using PC Link™ software the end user could have access to a number of features offered by the Dattus meter, as well as the ability to modify the configuration if necessary. Capabilities available via PC Link™.

▶ Data Logging
- Configurable hourly, daily, and monthly logs
- Configurable frequency logging, as often as every 30 seconds
- Data exportable to Microsoft® Excel

▶ Event Logging
- Date & time stamp for all alarms and configuration changes

▶ Configuration Snapshots
- Create a Microsoft® WORD document with all configuration information and instantaneous values
- Great tool for recording site visits

▶ Pulse Output Configuration
- Enable a pulse output
- Change the pulse output type/weight

▶ Fixed Factor Pressure Correction
- Enable display of fixed pressure corrected volume
- Programmable base, atmospheric, and fixed pressures

▶ Alarm Diagnostics

▶ Performing Meter Calibration

▶ View/Reset Maximum Flow Rate

▶ Performing Meter Upgrades

Note: The Dattus meter is password protected. No configuration changes can be made without it. Two levels of access are available, read only access and supervisor level, which allows for configuration changes.

System requirements for PC Link include;
- Windows Operating Systems 2000, NT, or XP
- Minimum 300 MHz processor
- Minimum 128 MB RAM
- Serial Port connection (DB9) on computer (or USB to serial converter, or PCMCIA serial port)

Factory available accessories;
- PC Link Software CD (part no. 442001-002)
- RS232 Communication Cable, 6' (part no. 600204-001)
- Pulse output cable 10' (part no. 442461-005)
- Pulse output cable 20' (part no. 442461-006)

Screen shot - Main

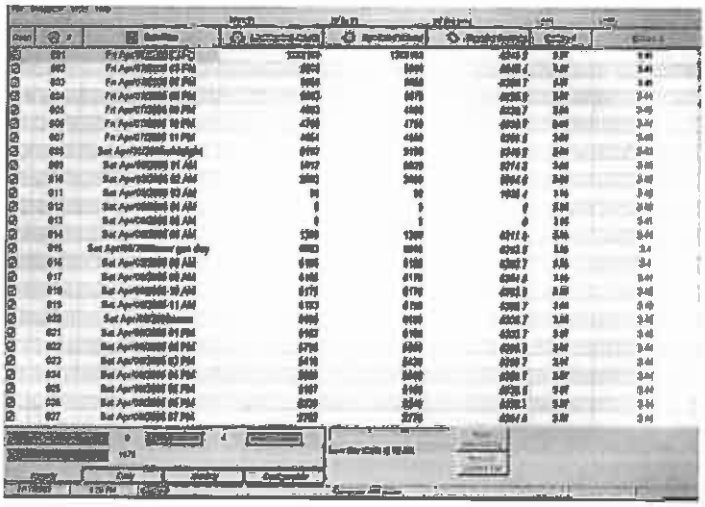

Screen shot - Data Logging

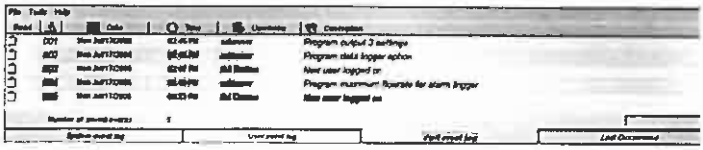

Screen shot - Event Logging

Limited Warranty

Actaris U.S. Gas, Inc., 970 Highway 127 North, Owenton, Kentucky 40359-9802, warrants this gas product against defects in materials and workmanship for the earlier of one (1) year from the date the product is shipped by Actaris or a period of one year from the date the product is installed by Actaris at the original purchaser's site. During such one-year period, provided that the original purchaser continues to own the product, Actaris will, at its sole option, repair any defects, replace the product or repay the purchase price.

• This warranty will be void if the purchaser fails to observe the procedures for installation, operation or service of the product as set forth in the Operating Manual and Specifications for the product or if the defect is caused by tampering, physical abuse or misuse of the product.

• ACTARIS SPECIFICALLY DISCLAIMS ALL IMPLIED WARRANTIES INCLUDING THOSE OF MERCHANTABILITY OR OF FITNESS FOR A PARTICULAR PURPOSE. UNDER NO CIRCUMSTANCES WILL ACTARIS BE LIABLE FOR INCIDENTAL OR CONSEQUENTIAL DAMAGES OF ANY KIND WHATSOEVER.

• Actaris' liability for any claim of any kind, including negligence and breach of warranty for the sale and use of any product covered by or furnished, shall in no case exceed the price allocable to the product or part thereof which gives rise to the claim.

• In the event of a malfunction of the product, consult your Actaris Service Representative or Actaris U.S. Gas, Inc., 970 Highway 127 North, Owenton, Kentucky 40359-9802.

SEE ACTARIS TERMS AND CONDITIONS OF SALE FOR THE FULL AND COMPLETE TERMS OF THE LIMITED WARRANTY.

▶ Ordering Information

Specify:

1. Dattus Model (fM2 or fM3)
2. Dattus Capacity Size (i.e. 1M, 2M, 56M)
3. Flange connection size (2" or 3" for fM2 or 4" for fM3)
4. Installation orientation (Horizontal or Vertical)
5. Volume units (Imperial or Metric)
6. Register multiplier (CFx100 is default)
7. Pulse output configuration if needed
8. Data logging optional
9. Pete's plugs optional
10. Fixed Pressure (if used, please specify Fixed, Atmospheric, and Base pressures)

▶ Reference Information

- Dattus Installation Guide
- Dattus™ Technical Reference Guide

Part No. 442002-002

B2F-0000-US-08-06 Copyright 2006 Actaris U.S. Gas, Inc. All Rights Reserved. Actaris reserves the right to change these specifications without prior notice.

Actaris U.S. Gas, Inc.
970 Highway 127 North
Owenton, Kentucky 40359-9302, USA
For more information: www.actarisusgas.com

tel +1 800 490 0657
+1 502 484 5747
fax +1 502 484 6223

Airtech Environmental Services, Inc.
30B Meter Box Full Test Calibration

Date: 5/23/2014

Operator: A. Kienitz

Meter Box	M-13							Meter Box Y_d	0.9974			Barometric Pressure (In. Hg.)	24.83		
Time	Orifice Data				Meter Box Data								Results		
θ (min)	K'	Vacuum	T_{amb}	V_{cr}	$V_{initial}$	V_{final}	V_d	LPM			T_m	V_{mstd}	Q	Y_d	ΔH@
10.0	0.051	15.0	71	15.561	922.20	940.97	18.77	1.88			72.5	15.525	1.556	1.0024	0.366
10.0	0.051	15.5	71	15.561	940.97	959.58	18.61	1.86			72.5	15.392	1.556	1.0110	0.369
10.0	0.051	15.5	71	15.561	959.58	978.47	18.89	1.89			73.5	15.595	1.556	0.9978	0.365
10.0	0.028	17.0	71	8.543	978.90	989.40	10.50	1.05			74.5	8.631	0.854	0.9899	0.657
10.0	0.028	17.0	71	8.543	989.40	999.93	10.53	1.05			75.5	8.640	0.854	0.9889	0.657
10.0	0.028	17.0	71	8.543	999.93	1010.45	10.52	1.05			76.5	8.615	0.854	0.9917	0.659
10.0	0.012	20.5	71	3.661	1011.56	1016.09	4.53	0.45			77.5	3.696	0.366	0.9906	1.532
10.0	0.012	20.5	71	3.661	1016.09	1020.54	4.45	0.44			78.5	3.624	0.366	1.0103	1.563
10.0	0.012	20.5	71	3.661	1020.54	1025.06	4.52	0.45			78.5	3.681	0.366	0.9946	1.538
													Average	0.9974	0.856

Nomenclature	
K'	Critical Orifice Coefficient
T_{amb}	Ambient Temperature (°F)
V_{cr}	Volume Through Orifice (L)
V_d	Gas Meter Volume (L)
ΔH	Orifice Pressure Differential (in. H_2O)
T_i	Meter Inlet Temperature (°F)
T_o	Meter Outlet Temperauture (°F)
T_{avg}	Average Meter Box Temperature (°F)
V_{mstd}	Volume Metered Standardized (L)
Q	Flow Rate (scfm)
Y_d	Meter Correction Factor (dimensionless)
ΔH@	ΔH yielding 0.75 scfm

Vacuum Gauge (In. Hg.)		Thermometers (°F)			
Standard	Vacuum Gauge	Standard	Ch. No. Stack	Ch. No. Aux 1	Ch. No. Aux 2
5	5.1	32	32	N/A	N/A
10	10.2	50	50	N/A	N/A
15	15.1	100	100	N/A	N/A
20	20.0	150	149	N/A	N/A
25	25.0	212	211	N/A	N/A
		250	249	N/A	N/A
		300	300	N/A	N/A
		350	350	N/A	N/A
		400	400	N/A	N/A
		500	500	N/A	N/A
		600	600	N/A	N/A

Equations

$$V_{cr} = \frac{K' * P_b * \theta}{(T_{amb} + 460)^{0.5}}$$

$$V_{mstd} = \frac{17.64 * V_d * (P_b + (\Delta H/13.6))}{(T_{avg} + 460)}$$

$$Q = V_{cr} / \theta$$

$$Y_d = V_{cr} / V_{mstd}$$

$$\Delta H@ = \frac{.0319 * \Delta H * (T_{avg} + 460) * \theta^2}{P_b * Y_d^2 * V_m^2}$$

Method 30B Post-Test Meter Calibration

Average Field Sample Rate (lpm)	1 lpm	Date	7/23/2014
Highest Field Vacuum (inches Hg)		Client	WDEQ
Critical Orifice ID	0.0120	Project No.	4572
Orifice Flow Rate (lpm)	0.46	Meter ID	M-13

	Run 1	Run 2	Run 3	
Initial Volume (l^3)	4704.52	4709.16	4713.79	
Final Volume (l^3)	4709.16	4713.79	4718.27	
Volume Metered (l^3)	4.64	4.63	4.48	
DGM Temperature (°F)	85.5	86.5	87.5	
Ambient Temperature (°F)	81	81	81	
Elapsed Time (min.)	10.0	10.0	10.0	
Setting (l/min)	0.46	0.46	0.45	
Barometric Pressure (inches Hg)	24.96	24.96	24.96	
Pump Vacuum (inches Hg)	21.0	21.0	21.0	
K'	0.012	0.012	0.012	
Vcr (l^3)	3.646	3.646	3.646	
Vmstd (l^3)	3.750	3.735	3.608	
Post Test Yc	0.97209	0.97598	1.01055	
Full Test Yd	0.9974	0.9974	0.9974	
% Difference	2.54	2.15	-1.32	
	Average Difference		1.12	

Airtech Environmental Services
Method 2A Full Meter Calibration

Date	1/26/2014
Dattus Meter ID	M-2A-1
Standard Meter ID	M-1

	Run 1	Run 2	Run 3
Standard Meter			
Barometric Pressure (inches Hg)	24.71	24.71	24.71
Initial Volume (ft^3)	319.60	328.87	338.10
Final Volume (ft^3)	328.87	338.10	347.42
Volume Metered (ft^3)	9.27	9.23	9.32
DGM Inlet Temperature (°F)	71.0	75.0	76.0
DGM Outlet Temperature (°F)	70.0	71.0	72.0
Average DGM Temperature (°F)	70.5	73.0	74.0
ΔH (inches H_2O)	1.00	1.00	1.00
Full Test Yd	1.0006	1.0006	1.0006
Elapsed Time (min.)	15	15	15
Vmstd (ft^3)	7.64	7.58	7.63
Dattus Meter			
Barometric Pressure (inches Hg)	24.71	24.71	24.71
Initial Volume (ft^3)	30,142	30,152	30,161
Final Volume (ft^3)	30,152	30,161	30,170
Volume Metered (ft^3)	10	9	9
Average Temperature (°F)	72.0	72.0	72.0
Vmstd (ft^3)	8.19	7.37	7.37
Summary Results			
Average Flow Rate (acfh)	0.17	0.15	0.15
Difference (%)	-7.19	2.66	3.42
Average % Difference			**-0.37**

Airtech Environmental Services
Method 2A Full Meter Calibration

Date	1/26/2014
Dattus Meter ID	M-2A-1
Standard Meter ID	M-1

	Run 1	Run 2	Run 3
Standard Meter			
Barometric Pressure (inches Hg)	24.71	24.71	24.71
Initial Volume (ft^3)	357.80	370.55	383.32
Final Volume (ft^3)	370.55	383.32	396.16
Volume Metered (ft^3)	12.75	12.77	12.84
DGM Inlet Temperature (°F)	79.0	81.0	82.0
DGM Outlet Temperature (°F)	75.0	75.0	76.0
Average DGM Temperature (°F)	77.0	78.0	79.0
ΔH (inches H_2O)	2.00	2.00	2.00
Full Test Yd	1.0006	1.0006	1.0006
Elapsed Time (min.)	15	15	15
Vmstd (ft^3)	10.42	10.41	10.45
Dattus Meter			
Barometric Pressure (inches Hg)	24.71	24.71	24.71
Initial Volume (ft^3)	30,171	30,184	30,196
Final Volume (ft^3)	30,184	30,196	30,209
Volume Metered (ft^3)	13	12	13
Average Temperature (°F)	72.0	72.0	72.0
Vmstd (ft^3)	10.65	9.83	10.65
Summary Results			
Average Flow Rate (acfh)	0.22	0.20	0.22
Difference (%)	-2.25	5.59	-1.91
Average % Difference			0.48

Airtech Environmental Services
Method 2A Full Meter Calibration

Date	1/26/2014
Dattus Meter ID	M-2A-1
Standard Meter ID	M-1

	Run 1	Run 2	Run 3
Standard Meter			
Barometric Pressure (inches Hg)	24.97	24.97	24.97
Initial Volume (ft^3)	403.90	419.12	434.66
Final Volume (ft^3)	419.12	434.66	450.20
Volume Metered (ft^3)	15.22	15.54	15.54
DGM Inlet Temperature (°F)	69.0	71.0	76.0
DGM Outlet Temperature (°F)	67.0	67.0	69.0
Average DGM Temperature (°F)	66.0	69.0	72.5
ΔH (inches H_2O)	3.00	3.00	3.00
Full Test Yd	1.0006	1.0006	1.0006
Elapsed Time (min.)	15	15	15
Vmstd (ft^3)	12.87	13.06	12.98
Dattus Meter			
Barometric Pressure (inches Hg)	24.97	24.97	24.97
Initial Volume (ft^3)	30,217	30,232	30,248
Final Volume (ft^3)	30,232	30,248	30,263
Volume Metered (ft^3)	15	16	15
Average Temperature (°F)	69.0	70.0	71.0
Vmstd (ft^3)	12.49	13.30	12.44
Summary Results			
Average Flow Rate (acfh)	0.25	0.27	0.25
Difference (%)	2.92	-1.80	4.11
Average % Difference			**1.74**

Airtech Environmental Services
Method 2A Full Meter Calibration

Date	1/26/2014
Dattus Meter ID	M-2A-1
Standard Meter ID	M-1

	Run 1	Run 2	Run 3
Standard Meter			
Barometric Pressure (inches Hg)	24.97	24.97	24.97
Initial Volume (ft^3)	462.60	480.72	499.06
Final Volume (ft^3)	480.72	499.06	517.32
Volume Metered (ft^3)	18.12	18.34	18.26
DGM Inlet Temperature (°F)	75.0	76.0	78.0
DGM Outlet Temperature (°F)	70.0	70.0	72.0
Average DGM Temperature (°F)	72.5	73.0	75.0
ΔH (inches H_2O)	4.00	4.00	4.00
Full Test Yd	1.0006	1.0006	1.0006
Elapsed Time (min.)	15	15	15
Vmstd (ft^3)	15.17	15.34	15.22
Dattus Meter			
Barometric Pressure (inches Hg)	24.97	24.97	24.97
Initial Volume (ft^3)	30,277	30,295	30,313
Final Volume (ft^3)	30,295	30,313	30,331
Volume Metered (ft^3)	18	18	18
Average Temperature (°F)	72.0	71.0	70.0
Vmstd (ft^3)	14.90	14.93	14.96
Summary Results			
Average Flow Rate (acfh)	0.30	0.30	0.30
Difference (%)	1.79	2.69	1.71
Average % Difference			**2.06**

Airtech Environmental Services
Method 2A Full Meter Calibration

Date	1/26/2014
Dattus Meter ID	M-2A-2
Standard Meter ID	M-1

	Run 1	Run 2	Run 3
Standard Meter			
Barometric Pressure (inches Hg)	24.71	24.71	24.71
Initial Volume (ft^3)	319.60	328.87	338.10
Final Volume (ft^3)	328.87	338.10	347.42
Volume Metered (ft^3)	9.27	9.23	9.32
DGM Inlet Temperature (°F)	71.0	75.0	76.0
DGM Outlet Temperature (°F)	70.0	71.0	72.0
Average DGM Temperature (°F)	70.5	73.0	74.0
ΔH (inches H_2O)	1.00	1.00	1.00
Full Test Yd	1.0006	1.0006	1.0006
Elapsed Time (min.)	15	15	15
Vmstd (ft^3)	7.64	7.58	7.63
Dattus Meter			
Barometric Pressure (inches Hg)	24.71	24.71	24.71
Initial Volume (ft^3)	291	300	309
Final Volume (ft^3)	300	309	319
Volume Metered (ft^3)	9	9	10
Average Temperature (°F)	72.0	72.0	72.0
Vmstd (ft^3)	7.37	7.37	8.19
Summary Results			
Average Flow Rate (acfh)	0.15	0.15	0.17
Difference (%)	3.53	2.66	-7.32
Average % Difference			**-0.38**

Airtech Environmental Services
Method 2A Full Meter Calibration

Date	1/26/2014
Dattus Meter ID	M-2A-2
Standard Meter ID	M-1

	Run 1	Run 2	Run 3
Standard Meter			
Barometric Pressure (inches Hg)	24.71	24.71	24.71
Initial Volume (ft^3)	357.80	370.55	383.32
Final Volume (ft^3)	370.55	383.32	396.16
Volume Metered (ft^3)	12.75	12.77	12.84
DGM Inlet Temperature (°F)	79.0	81.0	82.0
DGM Outlet Temperature (°F)	75.0	75.0	76.0
Average DGM Temperature (°F)	77.0	78.0	79.0
ΔH (inches H_2O)	2.00	2.00	2.00
Full Test Yd	1.0006	1.0006	1.0006
Elapsed Time (min.)	15	15	15
Vmstd (ft^3)	10.42	10.41	10.45
Dattus Meter			
Barometric Pressure (inches Hg)	24.71	24.71	24.71
Initial Volume (ft^3)	328	341	354
Final Volume (ft^3)	341	354	366
Volume Metered (ft^3)	13	13	12
Average Temperature (°F)	72.0	72.0	72.0
Vmstd (ft^3)	10.65	10.65	9.83
Summary Results			
Average Flow Rate (acfh)	0.22	0.22	0.20
Difference (%)	-2.25	-2.28	5.93
Average % Difference			**0.47**

Airtech Environmental Services
Method 2A Full Meter Calibration

Date	1/26/2014
Dattus Meter ID	M-2A-2
Standard Meter ID	M-1

	Run 1	Run 2	Run 3
Standard Meter			
Barometric Pressure (inches Hg)	24.97	24.97	24.97
Initial Volume (ft^3)	403.90	419.12	434.66
Final Volume (ft^3)	419.12	434.66	450.20
Volume Metered (ft^3)	15.22	15.54	15.54
DGM Inlet Temperature (°F)	69.0	71.0	76.0
DGM Outlet Temperature (°F)	67.0	67.0	69.0
Average DGM Temperature (°F)	66.0	69.0	72.5
ΔH (inches H_2O)	3.00	3.00	3.00
Full Test Yd	1.0006	1.0006	1.0006
Elapsed Time (min.)	15	15	15
Vmstd (ft^3)	12.87	13.06	12.98
Dattus Meter			
Barometric Pressure (inches Hg)	24.97	24.97	24.97
Initial Volume (ft^3)	372	388	404
Final Volume (ft^3)	388	404	419
Volume Metered (ft^3)	16	16	15
Average Temperature (°F)	69.0	70.0	71.0
Vmstd (ft^3)	13.32	13.30	12.44
Summary Results			
Average Flow Rate (acfh)	0.27	0.27	0.25
Difference (%)	-3.55	-1.80	4.11
Average % Difference			**-0.42**

Airtech Environmental Services
Method 2A Full Meter Calibration

Date	1/26/2014
Dattus Meter ID	M-2A-2
Standard Meter ID	M-1

	Run 1	Run 2	Run 3
Standard Meter			
Barometric Pressure (inches Hg)	24.97	24.97	24.97
Initial Volume (ft^3)	462.60	480.72	499.06
Final Volume (ft^3)	480.72	499.06	517.32
Volume Metered (ft^3)	18.12	18.34	18.26
DGM Inlet Temperature (°F)	75.0	76.0	78.0
DGM Outlet Temperature (°F)	70.0	70.0	72.0
Average DGM Temperature (°F)	72.5	73.0	75.0
ΔH (inches H_2O)	4.00	4.00	4.00
Full Test Yd	1.0006	1.0006	1.0006
Elapsed Time (min.)	15	15	15
Vmstd (ft^3)	15.17	15.34	15.22
Dattus Meter			
Barometric Pressure (inches Hg)	24.97	24.97	24.97
Initial Volume (ft^3)	430	448	466
Final Volume (ft^3)	448	466	485
Volume Metered (ft^3)	18	18	19
Average Temperature (°F)	72.0	71.0	70.0
Vmstd (ft^3)	14.90	14.93	15.79
Summary Results			
Average Flow Rate (acfh)	0.30	0.30	0.32
Difference (%)	1.79	2.69	-3.75
Average % Difference			**0.24**

5.8 Modeling Results: Available upon request from AQD