APPENDIX A

Framework Document

Well Bore Integrity – Final Report

The Wyoming Oil and Gas Conservation Commission (WOGCC or Commission) will develop a report that includes its technical and regulatory analysis along with assumptions and recommendations concerning the integrity of all oil and natural gas exploration and production wells within 1320 feet of the fourteen (14) domestic wells evaluated for water quality and palatability concerns. In developing its report, the WOGCC will solicit additional, relevant data from the WDEQ, SEO, EPA, USGS, BLM, Tribes, and the operator in order to complete its technical and regulatory analysis.

The WOGCC will contract with an expert or experts to review and comment on the Commission's analysis of well bore integrity in those wells. Specifically, the WOGCC will determine if records and test results demonstrate that wellbore construction is adequate to protect those water supply wells within 1320 feet of the oil and natural gas wellbores.

The report will consist of a comprehensive review of the following, if available:

- location (Q/Q, STR);
- distance to water well;
- lease type (fee, tribal);
- API #;
- date completed;
- operator;
- surface casing and cement;
- mud system;
- total depth;
- production casing and cement;
- cement bond log results;
- bradenhead test results;
- mechanical integrity tests;
- gas analysis from bradenhead and tubing;
- subsequent remedial work; and
- other data in the WOGCC records that are deemed pertinent.

Of particular interest is whether the available bradenhead test results for the Pavillion Field confirm hydraulic isolation, consistent with the June 2, 2011 "Pavillion Bradenhead Testing Procedure," approved by WOGCC sundry.

The expert or experts will assist the WOGCC staff in preparation of a final report that summarizes the results of the well bore integrity review and, specifically, includes an evaluation of the available data and addresses compliance with WOGCC regulatory requirements. The WOGCC and expert or experts may identify data gaps, including the need for additional testing and analysis and/or investigation. If the WOGCC and expert or experts identify data gaps, then, to

the extent feasible and consistent with applicable law, the WOGCC will work with the well operator to obtain the additional information in advance of issuance of the WOGCC's final report. This information and work will be summarized in WOGCC's final report. Any recommended work which cannot be completed in a reasonable timeframe will be identified in the WOGCC's final report, including a scope of work.

WOGCC will consider the following criteria in the selection of expert or experts:

- Expertise in petroleum engineering and hydrogeology.
- Individual(s) with both industry and academic experience.
- Professional Engineer preferable.
- Regional expertise (geologic, etc.).
- No conflicts with (financial or other) with State, EPA or Encana.

WOGCC will solicit and consider candidate expert or experts submitted by the EPA and Encana. EPA and Encana will be provided an opportunity to review the WOGCC's draft final report and provide comment prior to issuing its report. WOGCC plans to finalize this report no later than December 31, 2013.

The WOGCC reserves its rights to require any action consistent with its authorities under existing statutes, rules and regulations.

Pits – Final Report

The WOGCC will develop a report that includes its technical and regulatory analysis along with assumptions and recommendations concerning the status and reclamation of pits in the Pavillion Field. In developing its report, the WOGCC will solicit additional, relevant data from the WDEQ, EPA, BLM, Tribes, and the operator, in order to complete its technical and regulatory analysis. The report will summarize the results of records evaluated, identify historical pit locations, and outline site investigations and/or reclamation of pits conducted to date. The WOGCC will determine if the site investigations and/or reclamation was sufficient to protect those water supply wells within 1320 feet of the pit locations.

The WOGCC will contract with an expert or experts to assist in its review and analysis of the current body of information available for pits in the Pavillion Field. The expert or experts will be selected using the same process and have similar expertise as that identified for the Domestic Water Wells – Final Report and Palatability Study (see below).

WOGCC staff may identify data gaps, including the need for additional testing and analysis and/or site investigations and/or reclamation. If the WOGCC identifies data gaps, then, to the extent feasible and consistent with applicable law, the WOGCC will work with the well operator to obtain the additional information in advance of issuance of the WOGCC's final report. This

information and work will be summarized in WOGCC's final report. Any recommended work which cannot be completed in a reasonable timeframe will be identified in the WOGCC's final report, including a scope of work.

EPA and Encana will be provided an opportunity to review the WOGCC's draft final report and provide comment prior to issuing its report. WOGCC plans to finalize this report no later than December 31, 2013.

The WOGCC reserves its rights to require any action consistent with its authorities under existing statutes, rules, and regulations.

Domestic Water Wells – Final Report and Palatability Study

The Wyoming Department of Environmental Quality (WDEQ) will contract with an expert or experts to assist the WDEQ in its review of the current body of information available for the domestic water wells in the Pavillion Field. This review will consist of an evaluation of the data, conclusions and recommendations developed from the well bore integrity and pits final reports and a comparison of currently available analytical results for each domestic water well in the Pavillion Field to U.S. Environmental Protection Agency (EPA) primary maximum contaminant levels (MCLs) and secondary maximum contaminant levels (SMCLs), and WDEQ Water Quality Rules and Regulations, Chapter 8, Quality Standards for Wyoming Groundwaters. These standards and rules and regulations are provided in Attachment A. The review will evaluate, in particular, the domestic water wells commonly labeled as PGDW05, PGDW14, PGDW20, PGDW21, PGDW23, PGDW30, PGDW32, PGDW33, PGDW41, PGDW42, PGDW44, PGDW45, PGDW49, and LD02. Water quality in these wells exceeds standards for one or more constituents. In its review, the WDEQ will solicit additional, relevant data from the SEO, WOGCC, EPA, USGS, BLM, Tribes, and the operator, in order to complete its evaluation. Based on its review, the WDEQ may identify domestic water wells where additional testing and analysis is necessary. For these wells, WDEQ will undertake two (2) additional rounds of water quality sampling (pre- and post- irrigation season within a twelve (12) month period) to determine domestic well water quality and identify other parameters that might cause palatability or toxicity issues. Each domestic well also will be evaluated for well construction and integrity issues (including down-hole video), maintenance history and other proximate and pertinent features (e.g., septic systems).

The following standards and protocols will be used to guide the sampling efforts:

- The domestic well sampling will follow the WDEQ, Water Quality Division, Guideline for Sampling and Testing Well Water Quality (Attachment A) consisting of testing for Tier I, II, and III constituents.
    - The Tier III constituents will include analyzing for "indicator" chemical

compounds, including bacteria, and other microbial activity, as appropriate. Note that some of these indicator type compounds do not have water quality standards, but may be useful in evaluating palatability issues, along with many of the Tier I and II constituents.

- All laboratory analysis will be conducted by well-respected, appropriately certified (e.g., NELAC) commercial laboratories chosen by WDEQ and in accordance with WDEQ Water Quality Rules and Regulations, Chaper 8, Quality Standards for Wyoming Groundwaters, Section 7 (Attachment A) and in accordance with an approved Quality Assurance Project Plan (QAPP);
- Constituent detection limits used by commercial laboratories will be as specified in the analytical methods utilized and as defined by WDEQ Water Quality Rules and Regulations, Chapter 8, Quality Standards for Wyoming Groundwaters, Section 8 (Attachment A) and as defined by an approved QAPP; and
- Data qualifiers, blank contamination, and other QA/QC related issues will be handled in accordance with established US EPA National Functional Guidelines (2009).

WDEQ and the expert or experts will work with each individual landowner that allows sampling to determine the causes and sources of palatability issues and/or well contamination. In the event that the WDEQ is denied access to a well by the landowner, sampling and palatability consultation will be withdrawn and not included in this study.

- EPA MCLs, SMCLs, and Quality Standards for Wyoming Groundwaters are similar and largely overlap, but all of these standards will be utilized to ensure a comprehensive evaluation. Exceedence of standards, plus other palatability-related data, will be used to guide the investigation as to the palatability issues for that well.
- Oil and natural gas activities will be further investigated as a possible source of domestic water well palatability if oil and gas related volatile/semi-volatile organic constituents, including VOCs and SVOCs in DRO and GRO ranges, exceed MCLs, SMCLs or Quality Standards for Wyoming Groundwaters.
- If domestic well analytical results exceed standards for constituents determined by WDEQ to be associated with sources of contamination other than oil and gas activities or determined to be natural in derivation, then WDEQ will determine next steps with the landowner or as otherwise required in accordance with Wyoming law.

The expert or experts will assist the WDEQ in preparation of a final report that summarizes the analytical results relative to standards and, specifically, include a discussion of impacts on palatability associated with constituents and sources identified and appropriate responses. The WDEQ and expert or experts may identify data gaps, including the need for additional testing and analysis and/or investigation. The WDEQ will determine which wells may benefit from further

evaluation using exceedances of the standards listed above as a trigger for evaluation and testing. Further work may or may not include additional sampling of domestic wells and/or construction of groundwater monitoring wells, as appropriate. Any recommended work will be conducted consistent with WDEQ standard procedures. This information and work will be summarized in WDEQ's final report. Any recommended work which cannot be completed in a reasonable timeframe will be identified in the WDEQ's final report, including a scope of work. In its final report, the WDEQ will summarize its rationale and criteria used in the selection of domestic water wells for further testing and analysis and also include its rationale and criteria for any determinations made regarding additional testing and analysis and/or investigation.

WDEQ will consider the following criteria in the selection of an expert or experts:

- Expertise in hydrogeology, geochemistry, and toxicology.
- Individual(s) with both industry and academic experience.
- Regional expertise (geologic, etc.).
- No conflicts with (financial or other) with State, EPA or Encana.

WDEQ will solicit and consider candidate expert or experts submitted by the EPA and Encana. EPA and Encana will be provided an opportunity to review the WDEQ's draft final report and provide comment prior to issuing its report. WDEQ plans to finalize this report no later than September 30, 2014.

The WDEQ reserves the right to require any action consistent with its authorities under existing statues, rules, and regulations.

Attachment A

APPENDIX B

SAP

SAMPLING AND ANALYSIS PLAN

PREPARED FOR

2014 Groundwater Investigation
Fremont County, Pavillion, Wyoming
Wyoming Department of Environmental Quality
122 West 25th Street, 4 West
Cheyenne, Wyoming 82002

PREPARED BY

Acton • Mickelson • Environmental, Inc.
1107 Investment Boulevard, Suite 290
El Dorado Hills, California 95762
(916) 939-7550

AME Project Number 90081.01s

PREPARER

Jeffrey R. Heglie, R.G., C.E.G.
Project Hydrogeologist

Date 6/6/2014

REVIEWER

Barbara J. Mickelson, P.E.
Wyoming Professional Engineer #3866

Date 6/6/2014

Michael A. Acton
Principal/Project Manager

Date 6/6/2014

JUNE 6, 2014

TABLE OF CONTENTS

1. INTRODUCTION 1

2. OBJECTIVES 1

3. BACKGROUND 1

4. WATER SUPPLY WELL SAMPLING 1
   - 4.1 Overview and Schedule 2
   - 4.2 Selection of Sampling Points 2
   - 4.3 Groundwater Level Measurements 2
   - 4.4 Supply Well Sampling 3
   - 4.5 Field Quality Control Sampling 3
   - 4.6 Sample Analysis, Preservation and Handling 4

5. FIELD MEASUREMENT PROCEDURES 5
   - 5.1 General Parameters: Temperature, Specific Conductance, pH, Dissolved Oxygen, Turbidity, and Oxidation-Reduction Potential 5
   - 5.2 Ferrous Iron 5
   - 5.3 Sulfide 5

6. SAMPLE IDENTIFICATION AND SAMPLE CUSTODY 5
   - 6.1 Field Sample Identification 5
   - 6.2 Field Custody Procedures 6
     - 6.2.1 Field Documentation 6
     - 6.2.2 Sample Labels 6
     - 6.2.3 Field Notes 7
     - 6.2.4 Chain-of-Custody Record 7
   - 6.3 Sample Packing and Shipment 8
   - 6.4 Corrections to Documentation 8

7. SAMPLE ANALYSES AND REPORTING 8

8. EQUIPMENT DECONTAMINATION PROCEDURES 8
   - 8.1 Use and Maintenance of Dedicated Sampling Equipment 8
   - 8.2 Reusable Equipment 9

9. REMARKS 9

10. REFERENCES 9

Appendices

A Standard Operating Procedures

Tables

1 Sample Locations
2 Field Parameter Measurements and Methods
3 List of Field Samples Including Quality Assurance Samples
4A Sample Analysis, Containers, Preservation, and Holding Times: Listed by Parameter Group
4B Sample Analysis, Containers, Preservation, and Holding Times: Listed in Order Sampled

Figures

1 Site Location Map
2 Site Map with Locations of Water Supply Wells to Be Sampled

1. INTRODUCTION

This Sampling and Analysis Plan (SAP) describes procedures to be followed by Acton • Mickelson • Environmental, Inc. (AME), during collection of groundwater samples, and the methods to be utilized by the analytical laboratory. Sampling will be conducted in general accordance with procedures outlined in guidance documents from the Wyoming Department of Environmental Quality, Water Quality Division, Ground Water Section (WDEQ), the U.S. Geological Survey (USGS), the U.S. Environmental Protection Agency (EPA), and ASTM International.

2. OBJECTIVES

The objective of the work is to characterize water quality in the private water-supply wells listed in **Table 1** with regard to water-quality standards or other parameters that might cause palatability or toxicity issues.

3. BACKGROUND

Pavillion is a town of 231 residents in west-central Wyoming, which became the subject of a EPA groundwater investigation in 2008 when residents contacted the EPA about smells, tastes, and adverse changes in the water quality of their domestic wells.

The EPA conducted sampling from March 2009 to April 2011, including:

- March 2009: Aqueous samples from 35 domestic and 2 municipal wells

- January 2010: Groundwater samples from 17 domestic, 4 stock, and 2 municipal wells
  - A filter sample from a reverse osmosis system
  - Surface-water and sediment samples from 5 locations along Five-Mile Creek
  - Gas and produced water/condensate samples from 5 production wells
  - Groundwater samples from 3 shallow monitoring wells
  - Soil samples near the perimeter of three known pit locations

- June 2010: Installation of 2 deep monitoring wells to differentiate potential deep versus shallow sources of groundwater contamination
  - September 2010: Gas samples from the well casings of MW01 and MW02
  - October 2010: Groundwater samples from MW01 and MW02 and 3 domestic wells

- April 2011: Resampling of MW01, MW02, and 8 domestic and 3 stock/irrigation wells

The EPA released the results of their sampling at a public meeting in November 2011, followed by a draft investigation report in December 2011. The draft report integrated multiple lines of reasoning to formulate the explanation that constituents associated with hydraulic fracturing were at least partially to blame for resident complaints about drinking-water quality.

Questions were subsequently raised about the methodology and interpretation of data in the draft report, leading to additional sampling by the EPA in the first half of 2012, a USGS investigation of the EPA investigation, multiple extensions of the public comment period on the draft report, and agreement by the EPA in June 2013 to forego finalization of their draft report in favor of further investigation by the State of Wyoming.

4. WATER SUPPLY WELL SAMPLING

4.1 Overview and Schedule

Private water-supply wells will be sampled twice: once near the beginning of the irrigation season and once near the end of the irrigation season. The first sampling event is scheduled for the second and third weeks of June 2014, and the second sampling event is scheduled for August 2014.

Access to sampling locations will be obtained by the WDEQ in advance using written access agreements.

4.2 Selection of Sampling Points

On May 21 and 22, 2014, AME personnel completed a reconnaissance of water-supply wells included in the sampling program. Information from the site reconnaissance for each proposed sampling location is provided in **Table 1**, which also includes summary information on the sampling point, wellhead configuration, and location for purge water discharge.

In general, sample locations were selected that meet the following characteristics:

- Upstream of the pressure tank, when present, unless otherwise noted
- Upstream of treatment systems or other equipment
- A spigot or frost-proof hydrant to which a fitting for sampling equipment may be attached, located in an accessible location

The sampling points for wells PGDW05, PGDW20, PGDW33, PGDW41A, and PGDW41B are located downstream of pressure tanks, and possibly the sampling point for PGW30. Wells PGDW41A and PDGD41B are connected to a manifold ahead of the sampling point, and controls to isolate the wells may not be accessible during sampling.

4.3 Groundwater Level Measurements

Groundwater level measurements will be obtained in advance of sampling at the well locations equipped with an access port at the top of the well casing, provided it is in an accessible location (**Table 1**). Since the wells are equipped with downhole pumps, piping, and cables, measurements will be made using an acoustic water level meter in accordance with the Standard Operating Procedure (SOP) for Groundwater Level Measurement, Acoustic Meter provided in Appendix A.

4.4 Supply Well Sampling

Groundwater samples will be collected from the locations listed in **Table 1**. In general, prior to sample collection, a minimum of three casing volumes will be purged from each well. In some instances, a portion of the purging may be accomplished by the owner operating the well during the 3-hour period prior to the scheduled sampling.

Field water-quality parameters will be measured during purging, and purging will continue until the parameters have stabilized. At some locations, due to the depth of the well and the pump capacity, the casing volume may be large enough that it may not be practical to purge three casing volumes and sample within a work day. In these instances, field water-quality parameters will be monitored for stability before three casing volumes are purged.

Once field water-quality-parameter measurements have stabilized, groundwater samples will be collected. To minimize atmospheric contact and potential ambient contamination, a dedicated sampling manifold made of non-contaminating materials (NCM) attached to the sampling point will be used to convey the groundwater into sample containers. Well purging, monitoring of field parameters, and sample collection will be performed in accordance with the SOP for Groundwater Sampling, Private Water Supply Well in Appendix A.

Field-parameter measurements and methods are listed in **Table 2**. In addition to the parameters commonly monitored for well purge stability criteria (temperature, specific conductance, pH, dissolved oxygen, and turbidity), field measurements will be obtained for oxidation-reduction potential, ferrous iron, and sulfide. Salinity will be reported based on specific conductance measurements. **Table 2** includes summary information on the methodology and calibration notes.

In general, water-supply wells listed in **Table 1** are expected to yield sufficient water to allow for purging of three casing volumes before sampling. Well PGDW05 reportedly has limited capacity, and if it runs dry it will be sampled after water levels recover in accordance with the SOP.

4.5 Field Quality Control Sampling

The primary samples and field quality-control samples are listed on **Table 3**. Quality-control samples will include field duplicates, field blanks, and matrix spike/matrix spike duplicate (MS/MSD) samples.

Field duplicates will be collected at a rate of approximately 20 percent. Wells selected for collection of field duplicate samples are those where the sampling point is ahead of the pressure tank, and where access was granted in advance of work planning. Field duplicate samples will be collected for the full suite of analytical parameters, following collection of the entire primary sample.

Field blanks will be collected at a rate of approximately 10 percent. Since dedicated equipment will be used to obtain the samples, field blanks will be analyzed for a subset of analytical parameters.

An MS/MSD sample will be obtained during each sampling event, consisting of a sample of triplicate volume. Sample containers will be filled in the same order as the primary samples.

Trip blanks will be included with each cooler shipped that contains samples for: volatile organic compounds (VOCs) by EPA Method 8260B, gasoline range organics (GRO) by EPA Method 8015D, and dissolved gases by RSK-SOP 175. Trip blanks will consist of sample containers filled with organic-free deionized water at the laboratory.

4.6 Sample Analysis, Preservation and Handling

Sample analyses, containers, preservatives, and holding times are listed in **Table 4A** by parameter group. Samples will be analyzed for dissolved gases, general chemistry (including major anions, alkalinity, nutrients, total dissolved solids), microorganisms, radiochemistry, semi-volatile organic compounds (SVOCs, including pesticides, herbicides, fungicides, and diesel range organics), stable isotopes (isotopes of methane, ethane, dissolved inorganic carbon, and dissolved nitrate), trace metals, and VOCs including volatile organic acids, glycols, and GRO. Sample analyses, containers, preservatives, and holding times are listed in order of sampling in **Table 4B.** The order is based upon USGS guidance (USGS 2009).

As noted in Section 4.4, samples will be collected using dedicated equipment constructed of NCM, specifically fluoropolymers and a polyethylene two-way hose fitting connected to the sampling point. This eliminates the need to decontaminate equipment in the field. Since dedicated sampling equipment will be used, field blanks will be obtained for a subset of parameters judged to be most susceptible to contamination from the sampling equipment or from ambient conditions. This includes microorganisms, VOCs, GRO, volatile organic acids, and SVOCs.

Trip blank samples will be analyzed for: VOCs by EPA Method 8260B, GRO by EPA Method 8015D, and dissolved gases by RSK-SOP 175.

Samples for dissolved organic and inorganic carbon, isotopes of carbon in dissolved inorganic carbon, and isotopes of nitrogen and oxygen in dissolved nitrate will be filtered using certified pre-cleaned 0.45 µm in-line filter cartridges fitted to the sample fill tubing.

Samples will be collected for both total and dissolved metals concentrations in groundwater, and thus one of two metals samples will be filtered in the field. In accordance with the WDEQ Quality Assurance and Project Plan, in the event that field turbidity readings remain above 20 nephelometric turbidity units, only filtered (i.e. dissolved) samples for trace metals will be collected.

Groundwater samples will be collected into certified-clean and pre-preserved containers provided by the laboratory. Only sample containers appropriate for the intended analyses will be used.

After sample collection, the samples will be sealed in sealable plastic bags and then placed into coolers with water ice. The internal temperatures of the coolers will be maintained at approximately 4 degrees Celsius. Samples will be kept in coolers during transport to the analytical laboratory. Samples for volatile constituents (VOCs by EPA Method 8260B, GRO by

EPA Method 8015D, and dissolved gases by RSK-SOP 175) will be placed in the same cooler as the trip blank samples.

When preparing coolers for shipment via common carrier, sample containers will be wrapped in plastic bubble wrap, and any void space in the cooler will be filled with bubble wrap or other inert packaging material to avoid container breakage.

5. FIELD MEASUREMENT PROCEDURES

5.1 General Parameters: Temperature, Specific Conductance, pH, Dissolved Oxygen, Turbidity, and Oxidation-Reduction Potential

Temperature, specific conductance, pH, dissolved oxygen turbidity, and oxidation-reduction potential measurements will be obtained in the field with a multi-parameter water-quality meter equipped with a flow-through cell throughout the purging of the well. Final field parameter readings will be reported along with laboratory analytical data. The method description and daily instrument-calibration notes are included in **Table 2**. Further details on calibration and maintenance are provided in the AME Quality Assurance Project Plan (QAPP).

5.2 Ferrous Iron

Ferrous iron will be measured in the field using a portable colorimeter. Samples will be obtained following completion of well purging and stabilization of field parameters. The method description is included in **Table 2**. Further details on calibration and maintenance are provided in the QAPP.

5.3 Sulfide

Sulfide will be measured in the field using a portable colorimeter by method SM 4500 S2-D. Samples will be obtained along with ferrous iron samples following completion of well purging and stabilization of field parameters. The method description is included in **Table 2**. Further details on calibration and maintenance are provided in the QAPP.

6. SAMPLE IDENTIFICATION AND SAMPLE CUSTODY

This section describes standard operating procedures for sample identification, sample custody, and custody documentation. Sample custody procedures are to be followed so that sample integrity is maintained during collection, transportation, and storage prior to analysis.

6.1 Field Sample Identification

A specific nomenclature will be used to identify all samples collected during the investigation as indicated below:

Sample Location Type	Sample Matrix	Sample Type	Location Description on COC	Sample ID Format	Sample ID Example
Private Water Supply Well	Aqueous	Primary Sample	Well ID	Well ID-Date	PGDW30-06172014
		Field Duplicate	QAQC	Dupe-N-Date	Dupe-1-06172014
		Field Blank	QAQC	FB-N-Date	FB-1-06172014
		Trip Blank	QCTB	TB-N-Date	TB-1-06172014

Notes:

COC = chain of custody
N = Sequential integer assigned to each quality control sample per sampling event.
Date is listed as whole numbers without slashes or dashes.

6.2 Field Custody Procedures

A minimal number of individuals will handle samples. The field sampler is personally responsible for collection and custody of samples until they are transferred.

6.2.1 Field Documentation

Each sample will be labeled immediately after collection. Sample-identification documents will be prepared so that identification and chain-of-custody records can be maintained and sample disposition can be controlled. Forms will be filled out with waterproof ink. The following sample identification documents will be utilized.

- Sample labels
- Field notes
- Chain-of-custody forms

6.2.2 Sample Labels

Pre-printed sample labels will be provided. Where necessary, labels will be protected from water and solvents with clean label-protection tape. Each label will contain the following information:

- Sample ID
- AME project number
- Date and time of collection (time written by hand on pre-printed labels)
- Initials of collector
- Sample analysis
- Preservative (if any)

6.2.3 Field Notes

Information pertinent to a field survey, measurements, and/or sampling will be recorded in a bound notebook, on the daily field log, on log sheets, or on sampling forms. Notes should include the following:

- Name and title of author, date and time of entry, and physical/environmental conditions during field activity
- Location of sampling or measurement activity
- Name(s) and title(s) of field crew
- Type of sampled or measured media (e.g., soil, groundwater, or air)
- Sample collection or measurement method(s)
- Number and volume of sample(s) taken
- Number of sample containers
- Description of sampling point(s)
- Description of measuring reference points
- Date and time of collection or measurement
- Sample identification number(s)
- Sample preservative (if any)
- Sample distribution (e.g., laboratory)
- Field observations/comments
- Field measurements data (e.g., pH)

6.2.4 Chain-of-Custody Record

A chain-of-custody record will be filled out for and accompany every sample and shipment of samples to analytical laboratories in order to establish documentation necessary to trace sample possession from the time of collection. Records will contain the following information:

- Sample or station number or sample I.D.
- Signature of collector, sampler, or recorder
- Date and time of collection
- Place of collection
- Sample type
- Signatures of persons involved in the chain of possession
- Inclusive dates of possession

The laboratory portion of the form should be completed by laboratory personnel and will contain the following information:

- Name of person receiving the sample
- Laboratory sample number
- Date and time of sample receipt
- Analyses requested
- Sample condition and temperature

6.3 Sample Packing and Shipment

Samples will always be accompanied by a chain-of-custody record. When transferring samples to a courier or directly to sample receiving at a laboratory, individuals relinquishing and receiving samples will sign, date, and note the time on the chain-of-custody record.

When shipping samples by common carrier, the method of shipment, courier name(s), and other pertinent information will be entered in the chain-of-custody record, which will then be sealed in a waterproof plastic bag and placed on top of the shipping container.

Chain-of-custody seals will be affixed across the openings of shipping containers (e.g., across the front and back of their lids).

6.4 Corrections to Documentation

Original data recorded in field notes, chain-of-custody records, and other forms should be written in ink. These documents should not be altered, destroyed, or discarded, even if they are illegible or contain inaccuracies that require a replacement document.

If an error is made or found on a document, the individual making the corrections will do so by crossing a single line through the error, entering the correct information, and initialing and dating the change.

7. SAMPLE ANALYSES AND REPORTING

Sample analyses, containers, preservatives, holding times, and laboratories are listed in **Table 4A** by parameter group and in **Table 4B** by order sampled. Analyses for VOCs by EPA Method 8260B and SVOCs by EPA Method 8270D will include reporting of tentatively identified compounds.

Laboratory analytical reports will include electronic data deliverables for database upload. Data deliverables will be provided with Level IV quality assurance/quality control documentation. Further information on data assessment and management are provided in the QAPP.

8. EQUIPMENT DECONTAMINATION PROCEDURES

8.1 Use and Maintenance of Dedicated Sampling Equipment

Sample collection at each well will be accomplished using dedicated equipment consisting of a sampling manifold. Dedicated equipment will be stored in a sealable plastic bag labeled with a well identification number. Only equipment that does not contact samples (e.g., discharge line and flow totalizer) will be used at multiple locations.

8.2 Reusable Equipment

Field monitoring equipment (pH, conductivity, or temperature probes) will be rinsed with clean water prior to use and between samples.

9. REMARKS

This SAP represents our professional opinions, which are based in part on client-supplied and currently available information and are arrived at in accordance with accepted hydrogeologic and engineering practices at this time and location. Other than this, no warranty is implied or intended. This report was prepared solely for the use of our client. Any reliance on the information contained herein by third parties shall be at such parties' sole risk.

10. REFERENCES

USGS. Variously dated. *National field manual for the collection of water-quality data: U.S. Geological Survey Techniques of Water-Resources Investigations, book 9, chaps. A1-A9*, available online at http://pubs.water.usgs.gov/twri9A/

_____. 2006. *Collection of water samples (ver. 2.0): U.S. Geological Survey Techniques of Water-Resources Investigations, book 9, chap. A4*, September 2006, accessed January 16, 2014, at http://pubs.water.usgs.gov/twri9A4/

Wilde, F.D., Radtke, D.B., Gibs, Jacob, and Iwatsubo, R.T., eds., 2004 with updates through 2009, *Processing of water samples (ver. 2.2): U.S. Geological Survey Techniques of Water-Resources Investigations, book 9, chap. A5*, April 2004, accessed May 28, 2014, at http://pubs.water.usgs.gov/twri9A5/

WDEQ. 2011. *Ground Water Section, Quality Assurance Project Plan*. Water Quality Division. Ground Water Section. Cheyenne, WY. September.

TABLE 1

SAMPLE LOCATIONS

Well ID	Latitude	Longitude	Original Well Use	Well Status	Total Depth	Well Location and Surrounding Land Use	Sampling Point Description	Vault Depth Where Present	Well Head Description	Access Port and Diameter	Remarks	Video Camera Access
LD02	43.251542	-108.591198	Never used	Not used	610	Well is located near residence. Open access to well. Adjacent land use surrounding residence is agricultural use and farming equipment.	Sampling point is at well casing. Bailer or hydrosleeve could possibly be used for sample collection. No pump in well. No piping or pressure tank connected to well. Purge water discharged to ditch near well.		6-inch PVC casing with 6-inch PVC well cap. No pump in well. No piping from well. Slip cap can be removed.	Y	Well has never been in production because of odor. Well is not plumb which caused EPA downhole sampling pump to become stuck, leading to difficult removal. EPA used bailer to purge. (?)	Yes. Requires removal of PVC slip cap.
PGDW05	43.258851	-108.612630	Domestic supply	In use, low yield.	210	Well is located within lawn adjacent to residence. Adjacent land use surrounding residence is agricultural and livestock use.	Well located in 7.5 feet deep vault in grass area approximately 20 feet E of house. Heavy concrete lid requires sturdy bar/tool for lifting/removal. Recommended sample spigot has 3/4-inch hose thread and is on outside N wall of W portion of house, immediately W of and below RainBird box. Sample spigot is downstream of pressure tank which are located under house. No recommended sampling point between well and pressure tank. Discharge purge water to grass area on NW side of house.	7.5	7-inch diameter metal casing. Pitless adapter with 1-inch pipe. Top of well riser is near ground surface in vault and could be removed for video w/o entering vault. 5-bolt aluminum watertight well cap.	N	Well is water supply to house. Owner said well has lost production capacity and runs dry. EPA sampled at wellhead by removing well cap and mechanically lifting pump and from faucet in mudroom. Coordinates for sample spigot are offset 10.5 feet to N of spigot.	No. Owner stated he does not want video in this well conducted. If video allowed, removal of 5-bolt well cap required.
PGDW14	43.251533	-108.627365	Domestic supply	In use	190	Adjacent land use surrounding residence is agricultural use and property is sloped. Well is located below septic system.	Well is located in an 8-foot-deep concrete culvert vault. Access to vault is a wooden door with metal ladder to vault bottom. Sampling point is a blue freezeless yard hydrant 4-feet NE of wellhead. Hydrant has 3/4-inch hose thread. No pressure tank or RO unit observed. Purge water to irrigate landscape trees and plants.	8	6-inch PVC casing. Located under plastic cover adjacent to vault. Wellhead configuration uncertain. Pitless adapter to metal piping manifold located in vault.	N	Hydrant was EPA sampling point. Original domestic well was west of residence.	No. Uncertainty regarding wellhead configuration and removal of plastic cover.
PGDW20	43.251666	-108.591265	Domestic supply	Not used	380	Well is located near residence. Open access to well. Adjacent land use surrounding residence is agricultural use and farming equipment. Cow manure present on ground around well.	Sample point is a freezeless yard hydrant with 3/4-inch hose thread in corral located approximately 250 feet N of wellhead. Piping from well runs N for 15 feet to pumphouse containing RO unit and pressure tank and then further N for approximately 235 feet to the spigot. Well currently is not supplying sampling location (Cistern water currently supplies hydrant. Valves need to be adjust by owner prior to sampling). No sampling point prior to pressure tank unless installed by owner. Piping from well to spigot is black poly. Purge water discharged to ditch to N of spigot and fence.		5-inch metal casing. Pitless adapter that goes to pump house. 4-bolt ABS watertight well cap. No access port.	N	Was used as domestic well for residence; however, cistern system was installed at residence (has RO system and pressure tank with booster pumps). Well original TD 410 feet collapsed to 380 feet. Hydrant was EPA sampling point. OWNER HAS TO ADJUST PUMPHOUSE VALVES PRIOR TO OUR SAMPLING. Horse manure in corral. Cistern installed at residence.	Yes. Requires removal of 4-bolt well cap. The well will require additional accessment once the cap is removed to determine whether conducting the downhole video will be attempted.
PGDW23	43.248660	-108.622587	Domestic supply	In use	475	Well is located near residence. Open access to well. Adjacent land use surrounding residence is agricultural use and property is sloped.	Well located in open area SW of house and adjacent to a metal tank. Sampling point is freezeless yard hydrant 5-feet from wellhead. Hydrant has 3/4-inch hose thread (was EPA sampling point). Sample point prior to pressure tank (pressure tank, if present, are likely located under house). Purge water to irrigate landscape trees and shrubs.		6-inch PVC casing. Pitless adapter goes to pressure tank under house. Has freezeless yard hydrant within 5-feet of wellhead. Has 4-bolt ABS watertight well cap. There is no access port	N	Septic is located north of house.	Yes. Requires removal of 4-bolt well cap. The well will require additional accessment once the cap is removed to determine whether conducting the downhole video will be attempted.

TABLE 1

SAMPLE LOCATIONS

Well ID	Latitude	Longitude	Original Well Use	Well Status	Total Depth	Well Location and Surrounding Land Use	Sampling Point Description	Vault Depth Where Present	Well Head Description	Access Port and Diameter	Remarks	Video Camera Access
PGDW30	43.257541	-108.622552	Domestic supply	Unknown	260	Well is located near residence in a shed. Limited access to well. Adjacent land use surrounding residence is agricultural and livestock use. Goat pen located near wellhead	Well is located in shed ENE of house. Well is in NW corner of shed in a closet. Closet has one open side allowing access (tight) to wellhead. Spigot on outside W wall of shed was used as EPA sampling point and is sampling point. Spigot has 3/4-inch hose thread. Pressure tank located in shed between wellhead and spigot. Pressure tank can be bypassed so well can discharge direct to spigot. Another potential sampling point is in piping between well and pressure tank; this would require installation of a valve/spigot. Discharge purge water onto field E of well shed and E of fence.		6-inch PVC casing that is flush to surface, and is within a closet in a shed (limited access/close confines). No pitless adapter present. 4-bolt cast iron split well cap. Piping above well cap. No access port.	N	Was a domestic water supply. Cistern now installed at residence.	No. Piping disconnection required.
PGDW32	43.240751	-108.594132	Domestic, stock	In use	900	Well is located near residence. Open access to well. There are two aboveground storage tanks (ASTs) used to fuel ranch vehicles near well. Adjacent land use surrounding residence is agricultural and livestock use.	Well located in SW corner of grass yard. Sampling point is red-handle freezeless yard hydrant approximately 100 feet NE of well. Hydrant has 3/4-inch hose thread. Sampling point before pressure tank, which are located under house to N of hydrant. Purge water to be discharged to grass in yard.		6-inch metal casing. Pitless adapter goes to pressure tank under house. Sampling point is before pressure tank (pressure tank located under house). 4-bolt cast iron split well cap with 5/8-inch access port.	Y	Hydrant was EPA sampling point.	No. Piping disconnection required.
PGDW33	43.238541	-108.596406	Domestic supply	In use	30	Well is located @ 1150 feet away from residence. Access is limited. Adjacent land use surrounding well is agricultural and livestock use.	Well is located approximately 1200 feet SW of house within a pump house with a 4-foot deep vault. Sampling point is blue handle freezeless hydrant in grass yard approximately 50 feet SW of house. Sample point possible prior to pressure tank. Pressure tank and possible sampling point located in vault. Hydrant has 3/4-inch hose thread and possible sampling point in vault is 3/4-inch spigot. Hydrant sampling point is downstream of pressure tank. Purge water to be discharged to grass yard.	4	6-inch casing of unknown material (wellhead covered by metal cap). No pitless adapter present. Well has a single jet pump that is plumbed to pressure tank, then towards house. An access port to well could not be determined.	N	Hydrant was EPA sampling point.	Yes. Confirm with owner that non-bolted cap can be removed for access to well. Also, extension tool required to manipulate well cap due to vault depth.
PGDW41A	43.262126	-108.637860	Domestic supply	Stock, irrigation	376	Well is located near residence. Originally was told there was a single well. Two wells were identified. Open access to well. Adjacent land use surrounding residence is agricultural use and livestock use. Owners had cattle die after drinking well water.	Well located 8 feet SW of vault (7 feet deep) which contains pressure tanks and breakers. Sampling point is freezeless yard hydrant downstream of pressure tanks and adjacent to N wall of vault. Hydrant has 3/4-inch hose thread. Sample point possible prior to pressure tanks. Possible sampling point located in vault. Purge water to be discharged to ditch located W of horse corral located W of the well.	7	7-foot vault houses pump breakers and pressure tanks from wells 41a and 41b. 6-inch PVC casing. Pitless adapter goes to vault containing breaker, valves, and pressure tanks. Has 4-bolt ABS watertight well cap without access port.	N	Cistern installed at residence. Owners report cattle died after drinking well water.	Yes. Requires removal of 4-bolt well cap. The well will require additional accessment once the cap is removed to determine whether conducting the downhole video will be attempted.

TABLE 1

SAMPLE LOCATIONS

Well ID	Latitude	Longitude	Original Well Use	Well Status	Total Depth	Well Location and Surrounding Land Use	Sampling Point Description	Vault Depth Where Present	Well Head Description	Access Port and Diameter	Remarks	Video Camera Access
PGDW41B	43.262139	-108.637845	Domestic supply	Stock, irrigation	70	Well is located near residence. Originally was told there was a single well. Two wells were identified. Open access to well. Adjacent land use surrounding residence is agricultural use and livestock use. Owners had cattle die after drinking well water.	Well located 4 feet SW of vault (7 feet deep) which contains pressure tanks and breakers. Sampling point is freezeless yard hydrant downstream of pressure tanks and adjacent to N wall of vault. Hydrant has 3/4-inch hose thread. Sample point possible prior to pressure tanks. Possible sampling point located in vault. Purge water to be discharged to ditch located W of horse corral located W of the well.	7	7-foot vault houses pump breakers and pressure tanks from wells 41a and 41b. 8-inch PVC casing. Pitless adapter goes to vault containing breaker, valves, and pressure tanks. Has 4-bolt ABS watertight well cap without access port.	N	Cistern installed at residence. Owners report cattle died after drinking well water.	Yes. Requires removal of 4-bolt well cap. The well will require additional accessment once the cap is removed to determine whether conducting the downhole video will be attempted.
PGDW44	43.250277	-108.626442	Stock, irrigation	In use	750	Access to well is limited and would require partial removal of wood floor to access wellhead. Adjacent land use surrounding residence is agricultural use and property is sloped.	Well is located in an 8-foot deep concrete culvert vault. Wellhouse is a metal tank. Sampling point is freezeless yard hydrant 10-feet N of wellhead (near fence). Hydrant has 3/4-inch hose thread. Sampling point before pressure tank. Purge water to irrigate landscape trees and plants.	8	Well is 9-inch diameter steel casing. Pitless adapter to black plastic piping manifold. No well cap or seal present (need to unscrew wood floor for access to well for open access to well). Pressure tank plumbed on opposite side of plastic manifold and is after sampling location.	Y	Former Shell exploratory well. Hydrant was EPA sampling point. Able to supply drinking water for 750 head of horses during summer per owner.	Yes. Direct access to well.
PGDW45	43.258888	-108.612953	Stock, irrigation	In use	Unknown	Well is located within lawn adjacent to residence. Adjacent land use surrounding residence is agricultural and livestock use.	Well is not within a vault. Sampling point is a 3/4-inch hose thread (Y adapter) spigot located in the piping approx. 10 N of the well. No pressure tank present. Well pumps directly to surface piping. Purge water to be discharged to grass areas around well and house.		6-inch PVC well casing. No pitless adapter. 4-bolt cast iron split well cap with 5/8-inch access port. Piping above well cap.	Y	l for irrigation. Cistern not installed	No. Piping disconnection required.
PGDW49	43.255080	-108.618107	Stock supply	In use	50	Well is at location of livestock holding pen, and cow manure is present. Adjacent land use surrounding residence is agricultural and livestock use.	Well is within a large rubber tractor tire in a stock pen. Sampling point is a 3/4-inch hose thread spigot located immediately above the wellhead. No pressure tank present. Pumps directly to surface piping. Purge water to be discharged to agriculture field N of well.		6-inch metal well casing. No pitless adapter. Cast iron well cap with 3/4-inch access port. Piping above well cap.	Y	Cow manure on ground around well.	Yes. Access through 3/4-inch port.
Well Designated for Groundwater Level Measurement Only: Will Not be Sampled												
60F	43.258881	-108.613004	Stock supply		Unknown	Well is located within a shed near livestock pens. Open access to well. Cow manure is present. Adjacent land use surrounding residence is agricultural and livestock use.	Well located in wellhouse. Sampling point is in wellhouse and is a 3/4-inch hose thread spigot located before pressure tank. Well pumps directly to surface piping. Purge water to be discharged to pasture N of wellhouse.		6-inch PVC well casing. No pitless adapter. Has pressure tank. 4-bolt split metal well cap with 3/4-inch access port. Well is not in a vault.	Y	Cow manure on ground around wellhouse.	No. Well not sampled. No downhole video planned.

TABLE 2

FIELD PARAMETER MEASUREMENTS AND METHODS

Parameter	Stability Criterion	Measurement Method	Method Description	Stated Accuracy	Calibration Notes
Temperature	+/- 0.5 degree C	Meter/ flow-through cell*	Thermistor	+/- 0.15 degree C	Check prior to each sampling event; +/- 0.2 C.
Specific Conductance	+/- 5 percent	Meter/ flow-through cell*	Four electrode cell	+/- 0.5%	Check start and end of each day; +/- 5% 1 point with mid-range solution (e.g. 10 mS/cm) plus distilled water check (<0.03 mS/cm).
pH	+/- 0.1 pH unit	Meter/ flow-through cell*	Glass sensing and Ag/AgCl reference electrodes	+/- 0.2 unit	Calibrate start and end of each day; +/- 0.5 units. Two-point pH 7 and 10.
Oxidation-Reduction Potential	NA	Meter/ flow-through cell*	Ag/AgCl reference electrode	+/- 20 mV	Calibrate start and end of each day; +/- 20 mV, following pH calibration.
Dissolved Oxygen	+/- 0.3 mg/L	Meter/ flow-through cell*	Optical luminescence (ROX™)	+/- 0.1 mg/L	Check start and end of each day; +/- 5% to water-saturated air, 15 minutes. Sensor must be kept wet.
Turbidity	Minimize. Greater of +/- 10 percent or +/- 1 NTU	Meter/ flow-through cell*	Optical	+/- 2%	Calibrate start and end of each day 1 point with 0 NTU solution plus mid-point check (e.g. 12.7 NTU) +/- 5% using AMCO-AEPA standards (polymer beads).
Ferrous Iron	NA	Colorimetric**	Hach method 8146 with AccVac™ Ampules	+/- 1% in lab	Zero instrument with blank each reading.
Sulfide	NA	Colorimetric**	SM 4500 S2-D	+/- 3% in lab	To be performed by Precison Analysis
Salinity	NA	Determined from specific conductance	NA	NA	NA

Notes

** YSI 6920V2-2 multiparameter meter with two optical ports for turbidity and dissolved oxygen by optical luminescence.*

*** Hach DR/890 portable colorimeter or similar model.*

TABLE 3

LIST OF FIELD SAMPLES INCLUDING QUALITY ASSURANCE SAMPLES

Well ID	Primary Sample	Field Duplicate	Field Blank	MS/MSD	Trip Blank	Notes
60F						Groundwater level only.
LD02 ST	X					Not equipped with pump. Bent casing.
PGDW05	X				VOC	Low yield.
PGDW14	X					
PGDW20	X				VOC	
PGDW23	X					
PGDW30	X		X		VOC	
PGDW32	X	X			VOC	
PGDW33	X				VOC	
PGDW41A	X				VOC	May be combined with PGDW41B.
PGDW41B	-				-	May be combined with PGDW41A.
PGDW44	X					
PGDW45	X	X			VOC	
PGDW49	X			X	VOC	

Notes

MS/MSD = Matrix spike/ matrix spike duplicate

VOC = Trip blanks included with each cooler shipped that contains samples for:

Volatile organic compounds by EPA 8260B

Gasoline range organics by EPA 8015D

Dissolved gases by RSK-SOP 175

TABLE 4A

SAMPLE ANALYSES, CONTAINERS, PRESERVATION, AND HOLDING TIMES LISTED BY PARAMETER GROUP

Group	Analysis	Method	Total or Dissolved	Laboratory	Equip Blank	MS/MSD	Trip Blank	Number of Containers	Size Liters	Descrip-tion	Preserv-ative	Holding Time
Dissolved gases	Complete compositional gas analysis	GC	T	Isotech				1	0.75	Isoflask	Bactericide	NS
Dissolved gases	Methane, ethane, ethene	RSK-SOP 175	T	C&T		X	X	3	0.04	VOA	HCl	14 days
General chemistry	Alkalinity	SM 2320B	T	C&T		X		1	1**	P	Cold	14 days
General chemistry	Cyanide	SM 4500-Cn-E	T	C&T		X		1	0.25	P	NaOH	14 days
General chemistry	Total and dissolved organic carbon	SM 5310C	T	C&T		X		1	0.5***	G	H2SO4	28 days
General chemistry	Major anions: Br, Cl, F, NO2, NO3, SO4	EPA 300.0	T	C&T		X		0	1**	P	Cold	48 hours
General chemistry	Methylene Blue Activated Substances (MBAS)	SM 5540C	T	C&T		X		0	1**	P	Cold	48 hours
General chemistry	Nitrogen, ammonia	SM 4500NH3-D	T	C&T		X		0	0.5***	G	H2SO4	28 days
General chemistry	Oil and grease, petroleum (non-polar)	EPA1664A	T	C&T		X		1	1	G	HCl	28 days
Field parameter	Sulfide	EPA 376.2	T	Precision				4	0.04	VOA	Cold	NS
General chemistry	Total dissolved solids (TDS)	SM 2540C	T	C&T		X		0	1**	P	Cold	7 days
Microorganisms	E. Coli	SM 9223B	T	Precision	X			1	0.125	P	Na2S2O3	30 hours
Microorganisms	Total coliform	SM 9223B	T	Precision	X			1	0.125	P	Na2S2O3	30 hours
Microorganisms	Iron reducing bacteria	BART™ Bioreactor	T	Precision	X			1	1	P	Cold	30 hours
Microorganisms	Sulfate reducing bacteria	BART™ Bioreactor	T	Precision	X			0	*	P	Cold	30 hours
Radiochemistry	Gross-alpha including Ra-226 but not Rn and U)	NS	T	C&T/ GEL				1	0.5	P	HNO3	6 months
Radiochemistry	Radium-226	EPA 903.1	T	C&T/ GEL				1	1	P	HNO3	6 months
Radiochemistry	Radium-228	EPA 904.0	T	C&T/ GEL				1	1	P	HNO3	6 months
Radiochemistry	Radon	NS	T	C&T/ GEL				2	0.04	VOA	Cold	4 days
Radiochemistry	Stontium-90	NS	T	C&T/ GEL				1	1	P	HNO3	6 months
Semivolatile organics	Acrylamide	SW846 8032A / 8316	T	C&T/TBD		X		1	0.5	G	Cold	7 days
Semivolatile organics	Diesel range organics, with and without SGCU	SW846 8015D	T	C&T		X		2	0.5	G	Cold	14 days
Semivolatile organics	Nitrogen- and phosporus-containing pesticides	EPA 507	T	C&T/ APPL		X		1	1	G	Cold	14 days
Semivolatile organics	Organochlorine pesticides	EPA 8081	T	C&T/ APPL		X		1	1	G	Cold	14 days
Semivolatile organics	Organophosphorus compounds	EPA 8141B	T	C&T/ APPL		X		2	1	G	Cold	7 days
Semivolatile organics	Semivolatile organic compounds	SW846 8270D, report TICs.	T	C&T	X	X		2	1	G	Cold	7 days
Stable isotopes	Isotopes of carbon (d13C) and hydrogen (dD) in methane, and (d13C) ethane	GC/ Dual Inlet MS	T	Isotech				0	*	Isoflask	Bactericide	NS
Stable isotopes	Isotopes of carbon (d13C) in dissolved inorganic carbon	NS	D	Isotech				1	1	P	Cold	NS
Stable isotopes	Isotopes of nitrogen (d15N) and oxygen (d180) in dissolved nitrate	NS	D	Isotech				0	1	P	Cold	NS

TABLE 4A

SAMPLE ANALYSES, CONTAINERS, PRESERVATION, AND HOLDING TIMES LISTED BY PARAMETER GROUP

Group	Analysis	Method	Total or Dissolved	Laboratory	Equip Blank	MS/MSD	Trip Blank	Number of Containers	Size Liters	Descrip-tion	Preserv-ative	Holding Time
Trace metals	Metals, 22 trace and cations: Ag, Al, As, B, Ba, Be, Ca, Cd, Co, Cr, Cu, Fe, Mg, Mn, Mo, Na, Ni, Pb, Sb, Se, Sr, Th, V, Zn	SW846 6010B / 6020	T****	C&T		X		1	0.5	P	HNO3	6 months
Trace metals	Mercury (Hg)	SW846 7470	T****	C&T		X		0	*	P	HNO3	28 days
Trace metals	Lithium (Li) and Uranium (U)	SW846 6010B / 6020	T****	C&T/ TBD		X		1	0.25	P	HNO3	28 days
Trace metals	Metals, 22 trace and cations: Ag, Al, As, B, Ba, Be, Ca, Cd, Co, Cr, Cu, Fe, Mg, Mn, Mo, Na, Ni, Pb, Sb, Se, Sr, Th, V, Zn	SW846 6010B / 6020	D	C&T		X		1	0.5	P	HNO3	6 months
Trace metals	Mercury (Hg)	SW846 7470	D	C&T		X		0	*	P	HNO3	28 days
Trace metals	Lithium (Li) and Uranium (U)	SW846 6010B / 6020	D	C&T/ TBD		X		1	0.25	P	HNO3	28 days
Volatile organics	Gasoline range organics	SW846 8015D	T	C&T	X	X	X	3	0.04	VOA	HCl	14 days
Volatile organics	Glycols: 2-butoxyethanol, diethylene glycol, triethylene glycol, tetraethylene glycol	SW846 8015B	T	C&T/ Weck		X		3	0.04	VOA	Cool	14 days
Volatile organics	Volatile organic acids: acetate, butyrate, formate, lactate, propionate	NS	T	C&T/ Microbac	X	X		1	0.5	P	Cold	NS
Volatile organics	Volatile organic compounds	SW846 8260B w/ 5035 prep, report TICs.	T	C&T	X	X	X	3	0.04	VOA	HCl	14 days

Notes
All samples are aqueous samples.
** = Analyses combined; container listed on previous line item.*
*** = Alkalinity, anions, MBAS, and TDS analyses be combined in single 1-liter container.*
**** = Organic carbon and ammonia analyses combined in a single 0.5-liter container.*
*****= In the event that field turbidiy readings remain above 20 NTU, only filtered (i.e. dissolved) samples for trace metals will be collected.*
SGCU = Silica gel cleanup
TICs = Tentatively identified compounds

G = Amber glass
P = Polyethylene
VOA = 40mL Amber VOA Vial

HCL = Hydrochloric Acid to pH < 2
HNO3 = Nitric Acid to pH < 2
H2SO4 = Sulfuric Acid to pH < 2
NaOH = Sodium Hydroxide to pH >12

Laboratories:
C&T = Cutis and Tompkins Laboatories in Berkeley, California
C&T / APPL = Agriculture & Priority Pollutants Laboratories, Inc. in Clovis, California subcontracted to C&T
C&T/ Microbac = Microbac Laboratories, Inc. in Marietta Ohio subcontracted to C&T
C&T/ Weck = Weck Laboratories, Inc. In City of Industry, California subcontracted to C&T
C&T/ GEL = GEL Laboratories in Charleston, South Carolina subcontracted to C&T
Isotech = Isotech Laboratories, Inc. in Champaign, Illinois
Precision = Precision Analysis in Riverton, Wyoming

TABLE 4B

SAMPLE ANALYSES, CONTAINERS, PRESERVATION, AND HOLDING TIMES
LISTED BY ORDER SAMPLED

Group	Analysis	Method	Total or Dissolved	Laboratory	Equip Blank	MS/MSD	Trip Blank	Number of Containers	Size Liters	Descrip-tion	Preserv-ative	Holding Time
Field parameter	Sulfide	EPA 376.2	T	Precision				4	0.04	VOA	Cold	NS
Volatile organics	Gasoline range organics	SW846 8015D	T	C&T	X	X	X	3	0.04	VOA	HCl	14 days
Volatile organics	Glycols: 2-butoxyethanol, diethylene glycol, triethylene glycol, tetraethylene glycol	SW846 8015B	T	C&T/ Weck		X		3	0.04	VOA	Cool	14 days
Volatile organics	Volatile organic acids: acetate, butyrate, formate, lactate, propionate	NS	T	C&T/ Microbac	X	X		1	0.5	P	Cold	NS
Volatile organics	Volatile organic compounds	SW846 8260B w/ 5035 prep, report TICs.	T	C&T	X	X	X	3	0.04	VOA	HCl	14 days
Dissolved gases	Methane, ethane, ethene	RSK-SOP 175	T	C&T		X	X	3	0.04	VOA	HCl	14 days
Dissolved gases	Complete compositional gas analysis	GC	T	Isotech				1	0.75	Isoflask	Bactericide	NS
Stable isotopes	Isotopes of carbon (d13C) and hydrogen (dD) in methane, and (d13C) ethane	GC/ Dual Inlet MS	T	Isotech				0	*	Isoflask	Bactericide	NS
Semivolatile organics	Acrylamide	SW846 8032A / 8316	T	C&T/TBD		X		1	0.5	G	Cold	7 days
Semivolatile organics	Diesel range organics, with and without SGCU	SW846 8015D	T	C&T		X		2	0.5	G	Cold	14 days
Semivolatile organics	Nitrogen- and phosporus-containing pesticides	EPA 507	T	C&T/ APPL		X		1	1	G	Cold	14 days
Semivolatile organics	Organochlorine pesticides	EPA 8081	T	C&T/ APPL		X		1	1	G	Cold	14 days
Semivolatile organics	Organophosphorus compounds	EPA 8141B	T	C&T/ APPL		X		2	1	G	Cold	7 days
Semivolatile organics	Semivolatile organic compounds	SW846 8270D, report TICs.	T	C&T	X	X		2	1	G	Cold	7 days
Trace metals	Metals, 22 trace and cations: Ag, Al, As, B, Ba, Be, Ca, Cd, Co, Cr, Cu, Fe, Mg, Mn, Mo, Na, Ni, Pb, Sb, Se, Sr, Th, V, Zn	SW846 6010B / 6020	T****	C&T		X		1	0.5	P	HNO3	6 months
Trace metals	Mercury (Hg)	SW846 7470	T****	C&T		X		0	*	P	HNO3	28 days
Trace metals	Lithium (Li) and Uranium (U)	SW846 6010B / 6020	T****	C&T/ TBD		X		1	0.25	P	HNO3	28 days
Trace metals	Metals, 22 trace and cations: Ag, Al, As, B, Ba, Be, Ca, Cd, Co, Cr, Cu, Fe, Mg, Mn, Mo, Na, Ni, Pb, Sb, Se, Sr, Th, V, Zn	SW846 6010B / 6020	D	C&T		X		1	0.5	P	HNO3	6 months
Trace metals	Mercury (Hg)	SW846 7470	D	C&T		X		0	*	P	HNO3	28 days
Trace metals	Lithium (Li) and Uranium (U)	SW846 6010B / 6020	D	C&T/ TBD		X		1	0.25	P	HNO3	28 days
Stable isotopes	Isotopes of carbon (d13C) in dissolved inorganic carbon	NS	D	Isotech				1	1	P	Cold	NS
Stable isotopes	Isotopes of nitrogen (d15N) and oxygen (d180) in dissolved nitrate	NS	D	Isotech				0	1	P	Cold	NS
General chemistry	Alkalinity	SM 2320B	T	C&T		X		1	1**	P	Cold	14 days
General chemistry	Cyanide	SM 4500-Cn-E	T	C&T		X		1	0.25	P	NaOH	14 days

TABLE 4B

SAMPLE ANALYSES, CONTAINERS, PRESERVATION, AND HOLDING TIMES
LISTED BY ORDER SAMPLED

Group	Analysis	Method	Total or Dissolved	Laboratory	Equip Blank	MS/MSD	Trip Blank	Number of Containers	Size Liters	Descrip-tion	Preserv-ative	Holding Time
General chemistry	Major anions: Br, Cl, F, NO2, NO3, SO4	EPA 300.0	T	C&T		X		0	1**	P	Cold	48 hours
General chemistry	Methylene Blue Activated Substances (MBAS)	SM 5540C	T	C&T		X		0	1**	P	Cold	48 hours
General chemistry	Nitrogen, ammonia	SM 4500NH3-D	T	C&T		X		0	0.5***	G	H2SO4	28 days
General chemistry	Oil and grease, petroleum (non-polar)	EPA1664A	T	C&T		X		1	1	G	HCl	28 days
General chemistry	Total and dissolved organic carbon	SM 5310C	T	C&T		X		1	0.5***	G	H2SO4	28 days
General chemistry	Total dissolved solids (TDS)	SM 2540C	T	C&T		X		0	1**	P	Cold	7 days
Radiochemistry	Gross-alpha including Ra-226 but not Rn and U)	NS	T	C&T/ GEL				1	0.5	P	HNO3	6 months
Radiochemistry	Radium-226	EPA 903.1	T	C&T/ GEL				1	1	P	HNO3	6 months
Radiochemistry	Radium-228	EPA 904.0	T	C&T/ GEL				1	1	P	HNO3	6 months
Radiochemistry	Radon	NS	T	C&T/ GEL				2	0.04	VOA	Cold	4 days
Radiochemistry	Stontium-90	NS	T	C&T/ GEL				1	1	P	HNO3	6 months
Microorganisms	E. Coli	SM 9223B	T	Precision	X			1	0.125	P	Na2S2O3	30 hours
Microorganisms	Total coliform	SM 9223B	T	Precision	X			1	0.125	P	Na2S2O3	30 hours
Microorganisms	Iron reducing bacteria	BART™ Bioreactor	T	Precision	X			1	1	P	Cold	30 hours
Microorganisms	Sulfate reducing bacteria	BART™ Bioreactor	T	Precision	X			0	*	P	Cold	30 hours

Notes
All samples are aqueous samples.
** = Analyses combined; container listed on previous line item.*
*** = Alkalinity, anions, MBAS, and TDS analyses be combined in single 1-liter container.*
**** = Organic carbon and ammonia analyses combined in a single 0.5-liter container.*
*****= In the event that field turbidiy readings remain above 20 NTU, only filtered (i.e. dissolved) samples for trace metals will be collected.*
SGCU = Silica gel cleanup
TICs = Tentatively identified compounds

G = Amber glass
P = Polyethylene
VOA = 40mL Amber VOA Vial

HCL = Hydrochloric Acid to pH < 2
HNO3 = Nitric Acid to pH < 2
H2SO4 = Sulfuric Acid to pH < 2
NaOH = Sodium Hydroxide to pH >12

Laboratories:
C&T = Cutis and Tompkins Laboatories in Berkeley, California
C&T / APPL = Agriculture & Priority Pollutants Laboratories, Inc. in Clovis, California subcontracted to C&T
C&T/ Microbac = Microbac Laboratories, Inc. in Marietta Ohio subcontracted to C&T
C&T/ Weck = Weck Laboratories, Inc. In City of Industry, California subcontracted to C&T
C&T/ GEL = GEL Laboratories in Charleston, South Carolina subcontracted to C&T
Isotech = Isotech Laboratories, Inc. in Champaign, Illinois
Precision = Precision Analysis in Riverton, Wyoming

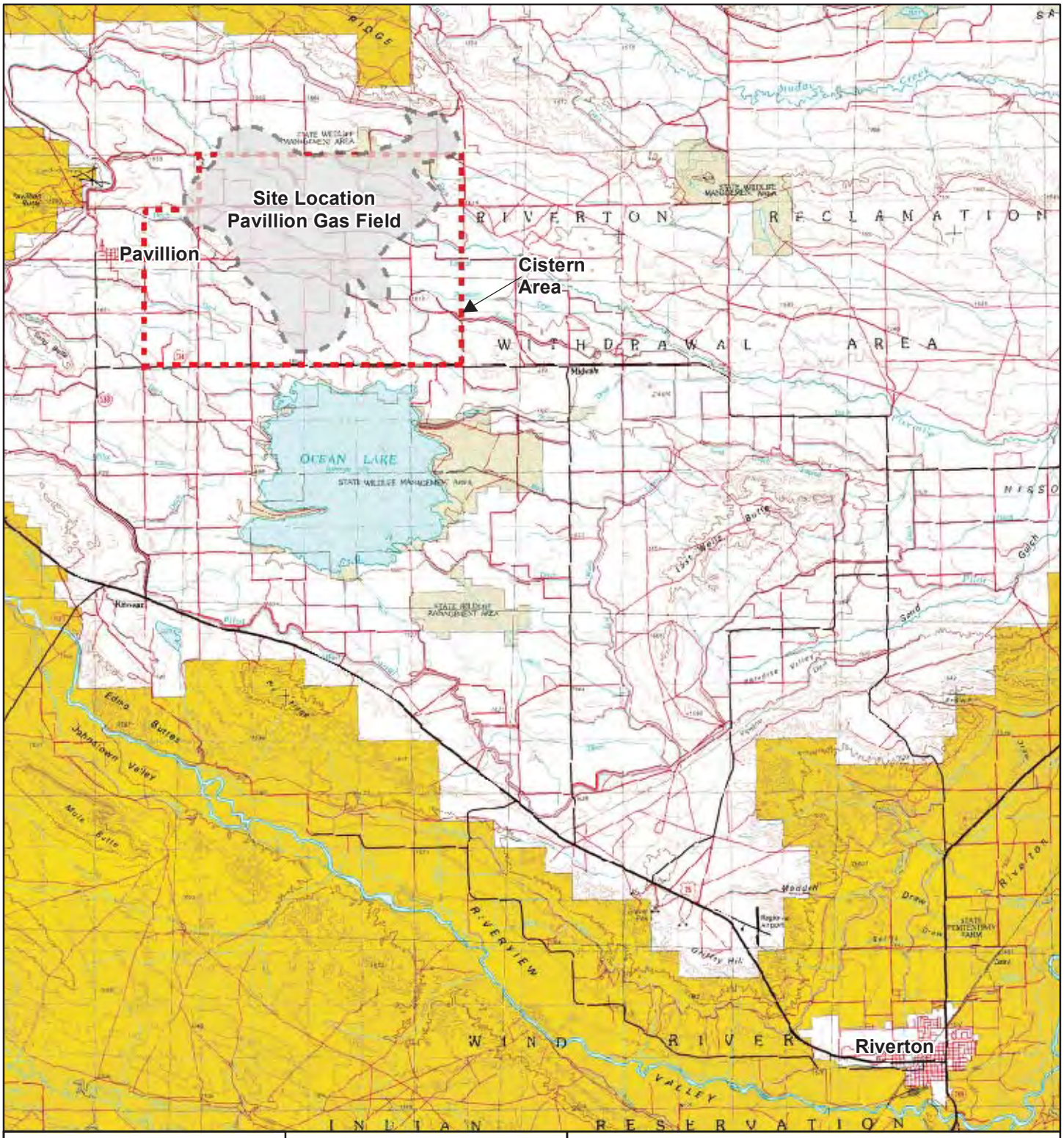

N

0 7,000 14,000

Feet

FIGURE 1

SITE LOCATION

Pavillion 2014 Groundwater Investigation
Freemont County, Wyoming

AME
Engineers and Earth Scientists

1107 Investment Blvd., #290, El Dorado Hills, California 95762 (916) 939-7550

2014-05-29 T:\90081_Pavillion\SAP\MXD\Fig01_Site_Location_Map.mxd JW

LEGEND

PGDW32 — WATER SUPPLY WELL LOCATION AND DESIGNATION

MAJOR ROADS AND HIGHWAYS

CISTERN AREA

PAVILLION GAS FIELD

N

0 900 1800

1 in = 1,800 feet

Notes:
1. Water supply well locations were collected with sub-meter GPS equipment by AME, 2014.
2. All other locations provided by WY DEQ; locations and dimensions are approximate.

FIGURE 2

SITE MAP WITH LOCATIONS OF WATER SUPPLY WELLS TO BE SAMPLED

Pavillion 2014 Groundwater Investigation
Freemont County, Wyoming

AME
Engineers and Earth Scientists

1107 Investment Blvd., #290, El Dorado Hills, California 95762 (916) 939-7550

2014-05-29 T:\90081_Pavillion\SAP\MXD\Fig02_Site_Map_with_Water_Supply_Wells.mxd JW

APPENDIX A

Standard Operating Procedures

STANDARD OPERATING PROCEDURE

GROUNDWATER LEVEL MEASUREMENT, ACOUSTIC METER

1. Scope and Application

This is a technical procedure for measuring groundwater levels with an acoustic water level meter. This method is applicable where downhole equipment such as pumps, pump cables, and discharge lines are present in the well, and the well is not equipped with a sounding tube. This method is also appropriate where the depth to water in a well is greater than the length of readily available electronic water level meters.

To use this method, the well must be fitted with an access port at least 5/8 inches in diameter in an accessible location. If torque arrestors, wire shields, or other equipment are present that cover more than half the area of the casing, erroneous readings may result.

In monitoring wells without downhole equipment, use of an electronic water level meter is recommended.

2. Equipment

2.1 Acoustic water level meter

2.2 Optional cap for water level meter for open casings

2.3 Wrench or other tools to open access port

2.4 Disposable nitrile gloves

2.5 Detergent/water mix in a spray bottle, tap water in a spray bottle, and disposable paper towels

3. Procedure

3.1 Review the Job Safety Analysis for this task.

3.2 Inspect and Open Access Port on the Well Head

- Don disposable gloves
- Inspect well completion (including sanitary seal) and note condition on field form
- Remove fluid and debris before opening the access port
- Note damage or debris/ fluid on field form

3.3 Collect Depth to Groundwater Measurement

- Depending on the meter, turn it on and set the temperature to match the approximate air temperature in the well casing. Refer to maps and tables supplied in the meter manual.
- Insert the measuring duct (sound wave guide) of the meter into the access port, so that the duct extends through the seal.
- Momentarily press power button and record the reading.
- In an uncased well, add the cap to the measuring duct to close off the open top of the casing.

3.4 Close Access Port

- Replace the cap on the access port and verify it is secure.

3.5 Decontaminate Meter

- Spray the probe and the section of tape that was submerged with the detergent/water mix, and rinse using the spray bottle with water.
- Use paper towels along with detergent/water mix to remove LPH or grease if present, and rinse.

4. References

AME. 2013. JSA Groundwater Level Measurements

U.S. Geological Survey. 2006. *Collection of water samples (ver. 2.0): U.S. Geological Survey Techniques of Water-Resources Investigations, book 9, chap. A4*, September 2006, accessed January 16, 2014, at http://pubs.water.usgs.gov/twri9A4/

STANDARD OPERATING PROCEDURE

GROUNDWATER LEVEL AND APPARENT LIQUID PHASE HYDROCARBON THICKNESS MEASUREMENT

1. Scope and Application

This is a technical procedure for measuring groundwater levels and apparent liquid phase hydrocarbons (LPH) thickness. For sites where LPH may be present, the static water level and apparent LPH thickness in each well will be measured with an electronic interface probe prior to purging or sampling.

Where downhole equipment such as pumps, pump cables, and discharge lines are present in the well, and the well is not equipped with a sounding tube, use of an acoustic water level meter is strongly recommended (see separate SOP). Also, if level meter with a tape is used in a water-supply well, additional equipment disinfection procedures are required.

2. Equipment

2.1 Conductance probe level meter with tape marked on 0.01 foot increments

2.2 Electronic interface meter (where LPH may be present) with tape marked on 0.01 foot increments

2.3 Socket wrenches or other tools to access well

2.4 Pry bar for well lid

2.5 Key to unlock the padlock on the well head

2.6 Disposable neoprene gloves

2.7 Detergent/water mix in a spray bottle, tap water in a spray bottle, and disposable paper towels

2.8 Disposable clear plastic bailer (where LPH may be present) and cord

3. Procedure

3.1 Review the Job Safety Analysis for this task.

3.2 Inspect and Clean up Well Head

- Don disposable gloves
- Inspect well completion (including well box lid and bolts for traffic boxes) and note condition on field form
- Open well box lid

- Inspect well box for damage and presence of debris and fluid
- Remove fluid and debris before unlocking and removing well cap
- Note damage or debris/ fluid on field form

3.2 Collect Depth to Groundwater and LPH Measurements

- Turn on the meter and check the meter for proper functioning by pressing the test button.
- Locate the reference point on the casing, which may be marked with a notch. If no reference point is visible, measure from the north side of the casing.
- Slowly lower the tape of the interface probe until a tone is emitted. Prevent the probe tip from contacted the ground or the interior of the well box.
- If the first encountered substance is LPH, lower the tape until the tone corresponding to water is emitted.
- At this point, the mark on the tape opposite the permanent reference point on the top of the well casing will be read to the nearest 0.01 foot.
- Repeat the measurement by slowly raising and lowering the tape. Measurements should agree within 0.01 to 0.02 foot. If not repeat a third time.
- Record the reading to the nearest 0.01 foot as depth to water.
- Slowly raise the tape until the tone for LPH ceases, which is the top of the LPH.
- Repeat the measurement by slowly raising and lowering the tape. Measurements should agree within 0.01 to 0.02 foot. If not repeat a third time.
- Record this reading to the nearest 0.01 foot as depth to LPH.

3.3 Collect LPH Sample (if applicable)

- Gently lower the bailer approximately one-half the bailer length past the air/LPH interface.
- Retrieve the bailer.
- Note the appearance (color, opacity, "freshness") of the LPH on field notes.

3.4 Collect Depth to Groundwater Measurement

- Locate the reference point on the casing, which may be marked with a notch. If no reference point is visible, measure from the north side of the casing.
- Slowly lower the tape of the conductance probe until a tone is emitted (typically a steady tone).

- At this point, the mark on the tape opposite the permanent reference point on the top of the well casing will be read to the nearest 0.01 foot.
- Repeat the measurement by slowly raising and lowering the tape. Measurements should agree within 0.01 to 0.02 foot. If not repeat a third time.
- Record this reading to the nearest 0.01 foot as depth to water.

3.5 Close Well Head

- Replace well cap securely and replace lock.
- Replace well box and verify that bolts are secure.

3.6 Decontaminate Meter

- Spray the probe and the section of tape that was submerged with the detergent/water mix, and rinse using the spray bottle with water.
- Use paper towels along with detergent/water mix to remove LPH or grease if present, and rinse.

4. References

AME. 2013. JSA Groundwater Level Measurements

ASTM. 2007. Standard Test Method for Determining Subsurface Liquid Levels in a Borehole or Monitoring Well (Observation Well). D 4750.

U.S. Geological Survey. 2006. *Collection of water samples (ver. 2.0): U.S. Geological Survey Techniques of Water-Resources Investigations, book 9, chap. A4*, September 2006, accessed January 16, 2014, at http://pubs.water.usgs.gov/twri9A4/

STANDARD OPERATING PROCEDURE

GROUNDWATER SAMPLING, PRIVATE WATER SUPPLY WELLS

1. Scope and Application

This is a technical procedure for sampling private water-supply wells. This procedure is written for typical well construction that supplies domestic water for a private residence and/or small-scale irrigation or livestock supply. The water-supply system typically includes:

- A water-supply well with a casing less than 10 inches in diameter
- A submersible pump or jet pump
- A well head completion on the surface or in a shallow pit, possibly with a pitless adapter in cold climates
- A pressure tank if for domestic use, either near the well or inside the residence

To collect representative groundwater samples, a sampling point must include the following characteristics:

- Upstream of pressure tank when possible
- Upstream of treatment systems or other equipment, unless these can be bypassed
- A spigot or drain to which a fitting for sampling equipment may be attached, located in an accessible location

Where possible, the sample location should be identified during a site reconnaissance ahead of the scheduled sampling time. Items to assess include site access, the location of the sampling point, adjoining land use, the location of the well, the current well use, well construction information if available, the configuration of the well head including access ports for sounding devices, and a location for purge water discharge.

This procedure assumes that no modification to the water-supply system will be made. Based on project-specific requirements and access arrangements with property owners, modifications such as the addition of sampling ports may be provided separately.

This procedure also assumes that the well is not equipped with a dedicated sampling port, which is not a typical configuration. (In the event that a sampling port is present that meets the above criteria, the portion of the sample manifold for the water-quality measurements and sample collection may be fitted to the sampling port, while the discharge hose and flow totalizer may be connected to a separate downstream spigot.)

2. Equipment

2.1 Keys and/or tools to access the sampling location

2.2 Groundwater level measurement equipment (see separate SOP)

2.3 Dedicated sampling manifold consisting of: 1) a connection fitting for the sampling point (typically 0 inch), 2) a reducing tee with a hose fitting connected to the large discharge end, 3) a flow-regulating valve, 4) a 3-way valve, and 5) tubing to connect the fittings and the flow-through cell and to fill sample containers (**Figure 1**). Fittings, valves, and tubing will consist of pre-cleaned fluoropolymer or food-grade polyethylene.

2.4 Bag for storing dedicated sampling equipment, labeled with well name

2.5 Multi-parameter water-quality meter for measuring field parameters (temperature, specific conductance, pH, dissolved oxygen, and turbidity) equipped with a flow-through cell

2.6 A hose to convey groundwater discharge from purging to the designated disposal location

2.7 A totalizing flow meter with fittings to connect to the discharge of the sample manifold and to the discharge hose. A flow-regulating valve should be included at the discharge end to regulate flow if needed.

2.8 Plastic sheeting or tarp to place at the sample collection location

2.9 Bucket to collect purge water from the flow-through cell at the sample collection location

2.10 Sample containers, pre-cleaned and containing preservative when required

2.11 Pre-cleaned cartridge filters with fittings to match the sample collection tubing, when samples are to be filtered for analysis for dissolved constituents

2.12 Supplies for field quality assurance samples, such as: trip blank samples in 40 ml VOA vials, distilled/deionized water for field blank samples

2.13 Disposable nitrile gloves

2.14 Ice for samples

2.15 Sample coolers and packing material

3. Procedure

3.1 Review the Job Safety Analysis for this task

3.2 Prepare Sampling Location

- Optionally, if feasible, request the owner to operate the well within a 3-hour period in advance of the scheduled sampling

- Clear the work area of obstructions
- Position vehicles and/or equipment near the work area
- Place plastic sheeting or tarp on the ground where the sample bottles will be filled and water quality meter with flow-through cell will be located
- Check that the sampling location spigot or drain is clear of obstructions and remove aerator if present
- Attach the sampling manifold to the spigot or drain and attach the flow-through cell. Close the three-way valve.
- Attach a discharge hose to the manifold with the totalizing flow meter in line
- Prepare the water quality meter
- If included in the work scope, prepare a clean and protected work location for obtaining other field water quality measurements, and prepare the equipment

3.3 Measure Water Level and Estimate Casing Volume

- Refer to the SOP Groundwater Level Measurement, Acoustic Meter
- Estimate the casing volume: $V = 0.0408 \text{ X } HD^2$ where V is the volume in gallons, H is the height of the water column in feet, and D is the inside diameter of the well casing in inches.
- Ascertain if the well has been in use within approximately 3 hours of sample collection for long enough periods to have removed three casing volumes of water. If so, proceed directly to measurement of field parameters for stability.

3.4 Purge Well and Monitor Field Parameters

- Note the starting value at the totalizing flow meter.
- Open the valve at the sampling location.
- Ascertain that the sampling train and flow meter are functioning and that the purge water is discharging at the designated location.
- Open the 3-way valve to divert flow to the flow-through cell and begin to monitor field parameters. Record the purge volume and purging rate. During purging of the initial 3 casing volumes, at a minimum, collect a reading after each casing volume is removed.
- As the third casing volume is purged, collect at least 5 sets of field parameter measurements at regular intervals while maintaining the pumping rate. Compare the field parameter readings against the following stability criteria:

Parameter	Stability Criterion
Temperature	+/- 0.5 degree C
Specific Conductance	+/- 5 percent
pH	+/- 0.1 pH unit
Dissolved Oxygen	+/- 0.3 mg/L
Turbidity	Minimize. Greater of +/- 10 percent or +/- 1 NTU

- Once the stability criteria have been met, proceed to collect the sample.
- If the stability criteria are not met after approximately 5 casing volumes have been purged, evaluate the feasibility of continued purging. Note on the sampling form if samples are collected before stability criteria are not met.
- If the well is a poor producer and is purged dry, turn off the pump immediately and allow water levels to recover to approximately 90 percent of the static water level. Proceed to sample collection while monitoring field parameters, and note the exception to the standard procedure on the field form.

3.5 Collect the Sample

- Maintain the pumping rate, do not decrease. Decreasing the pumping rate may cause cycling of the pump and possible backflow of water from the plumbing system and/or pressure tank.
- Implement clean hands/dirty hands (CH/DH) for collecting samples. Delegate one team member to don fresh disposable gloves and handle the sample containers and discharge tubing.
- Switch the 3-way valve to direct the flow to the sample fill tubing.
- Allow for a minimum of 5 tubing volumes to flow to waste in the bucket.
- Adjust flow for filling sample containers: approximately 500 ml/minute for large containers, and approximately 150 ml/minute for VOAs and other small containers.
- Do not touch the lip of sample containers or inside edges of the caps.
- For samples WITHOUT preservatives, rinse the bottle with sample water by filling 1/10 full, shaking, and discarding the contents to the bucket. DO NOT rinse bottles with preservatives.
- Fill sample containers from discharge tube while minimizing aeration of the sample. Do not overfill containers containing preservative. Fill VOA vials to a meniscus and check that there are no air bubbles once the cap is in place.

- In general, fill sample containers in the following order: 1) volatile organic compounds, 2) semi-volatile organic compounds, 3) trace and major element cations, 4) general chemistry (nutrients, major anions, alkalinity), 5) radiochemicals and isotopes, 6) filtered dissolved organic carbon, and 7) microorganisms.

- For samples requiring field filtration, attach the filter cartridge to the end of the sample fill tubing. Allow the initial flow from the filter to discharge to waste before filling the sample container.

3.6 Prepare the Sample for Transport from the Site

- Review sample container labels against the chain-of-custody form

- Verify sample containers are in the correct cooler if transporting to multiple laboratories

- Place sample containers into cooler with water ice inside sealable plastic bags. Maintain the internal temperature of the cooler at approximately 4 degrees C.

- Verify field QA samples such as trip blanks are included where needed, in the cooler with samples for VOC analysis.

- Maintain sample chain-of custody.

3.5 Remove Equipment and Clean Up Site

- Place the dedicated sampling manifold in a bag labeled with well name and store for use during next sampling event.

- Remove plastic sheeting from the sample location.

- Restore site to original condition.

4. References

AME. 2013. JSA, Ground Water Sampling

ASTM. 2007. *Standard Guide for Sample Ground-Water Monitoring Wells*. Designation D4448-07.

U.S. Geological Survey. 2006. *Collection of water samples (ver. 2.0): U.S. Geological Survey Techniques of Water-Resources Investigations, book 9, chap. A4*, September 2006, accessed January 16, 2014, at http://pubs.water.usgs.gov/twri9A4/

Wilde, F.D., Radtke, D.B., Gibs, Jacob, and Iwatsubo, R.T., eds. 2004 with updates through 2009. *Processing of water samples (ver. 2.2): U.S. Geological Survey Techniques of Water-Resources Investigations, book 9, chap. A5*, April 2004, accessed May 28, 2014, at http://pubs.water.usgs.gov/twri9A5/

5. Attachments

Figure 1: Dedicated Sampling Manifold.

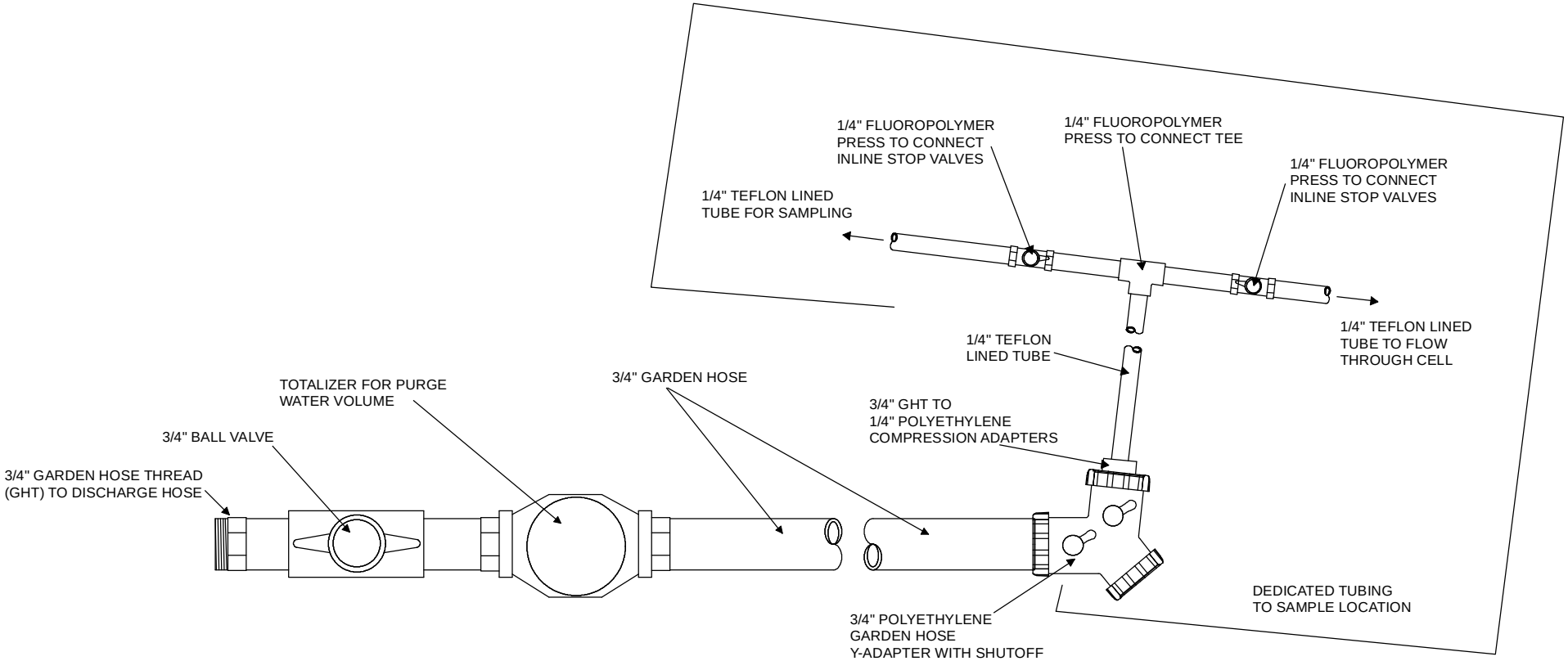

FIGURE 1
SAMPLING MANIFOLD

Pavillion 2014 Groundwater Investigation
Fremont County, Wyoming

DRAFT

AME
Engineers and Earth Scientists

1107 Investment Blvd., #290, El Dorado Hills, California 95762 (916) 939-7550

2014-06-03 T:\90081_Pavillion\CAD\fig01_sampling_manifold.mxd JW

ISOTECH®
ISOTECH LABORATORIES INC
1308 Parkland Court Champaign, IL 61821 • (877) 362-4190 • www.isotechlabs.com

Collection of Ground Water Samples from Domestic and Municipal Water Wells for Dissolved Gas Analysis Using IsoFlasks®

1. Sampling source: Water samples should either be collected from a pressurized water system or by using a suitable water pump. When sampling from a pressurized water system, it is recommended to use an outdoor spigot or other source which bypasses any water treatment systems (i.e. water softeners, etc.). When using a pump, it should be capable of maintaining a constant pressure at or above that which exists within the aquifer. This is to ensure that gases dissolved in the water within the aquifer remain dissolved until the water is transferred into an IsoFlask. If using a pulsating pump such as a bladder pump, please contact Isotech for additional recommendations.
2. Record sample information onto the IsoFlask using the provided soft-tip, permanent pen.
3. Purge the well (see reverse side).
4. Attach the fill tube and purge with the source water. A control valve is included on the fill tube to assist in sampling. Use the control valve to stop/start flow into the IsoFlask (after purging).
5. The IsoFlasks have been evacuated in advance. A capsule filled with bactericide has also been inserted. A properly evacuated IsoFlask will be tightly held against the bactericide capsule. If the IsoFlask appears to have lost vacuum, do not use and contact Isotech for further instruction and/or replacement.
6. ***While the water is flowing*** attach the fill tube to an evacuated IsoFlask.
7. The IsoFlask should be filled with 600-700 cc of water (i.e. to a thickness of about 2 inches). When sufficient sample has been collected, close the sampling valve and quickly disconnect the fitting from the IsoFlask. The water flow can now be turned off and the hose disconnected. NOTE: Do not overfill the IsoFlask (the IsoFlask should not be under pressure).
8. Submission of samples: Place the IsoFlask into its protective box laying flat. Complete a Chain-of-Custody/Analysis Request Form and include it with the sample(s). If possible, samples should be shipped the same day collected, via an overnight delivery service. Client MUST inform Isotech of shipment prior to arrival. Please note Isotech's receiving hours of Monday through Friday 8:00 a.m. to 4:30 p.m.

Ship samples to:
Isotech Laboratories, Inc.
1308 Parkland Court
Champaign, IL 61821

These instructions have been provided to simplify the collection of samples for dissolved gas analysis. Although we try to foresee and avoid problems in the field, it is never possible to predict every situation. If you encounter any difficulties, or if any additions or changes in these instructions would be beneficial, please let us know.

Isotech Laboratories, Inc. makes no warranty as to the applicability and/or safety of the procedures described herein.

ISOTECH®
ISOTECH LABORATORIES INC
1308 Parkland Court Champaign, IL 61821 • (877) 362-4190 • www.isotechlabs.com

How to properly fill an IsoFlask

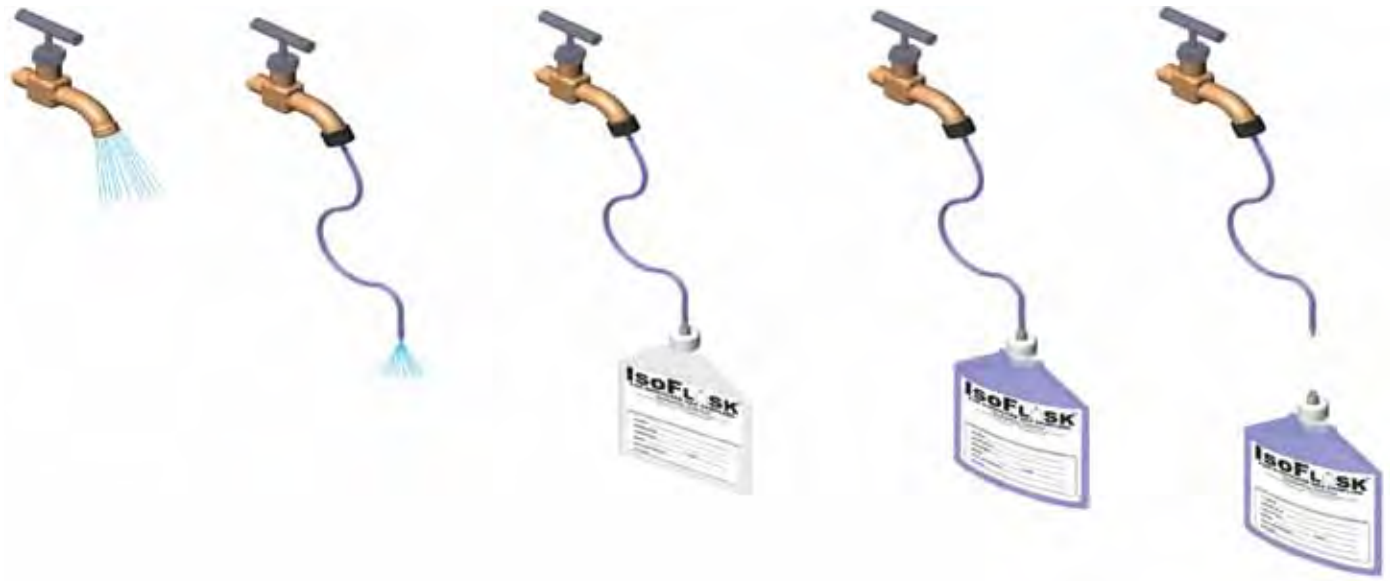

1
Purge line

2
Attach fill tube & purge

3
Attach evacuated IsoFlask (***while water is still flowing***)

4
Fill IsoFlask 2/3 full (***approximatley 2 inches thick, see below***)

5
Detach IsoFlask from fill tube

Not full enough

Correct

Too full

Weatherford®
LABORATORIES

© 2014 Weatherford. All rights reserved.
Weatherford products and services are subject to the Company's standard terms and conditions, available on request or at weatherford.com. For more information contact an authorized Weatherford representative. Unless noted otherwise, trademarks and service marks herein are the property of Weatherford and may be registered in the United States and/or other countries. Weatherford products named herein may be protected by one or more U.S. and/or foreign patents. For more information, contact patents@weatherford.com. Specifications are subject to change without notice. Weatherford sells its products and services in accordance with the terms and conditions set forth in the applicable contract between Weatherford and the client.

0.1 02/14

SAMPLING AND ANALYSIS PLAN ADDENDUM: WELL VIDEO SURVEYS

PREPARED FOR

2014 Groundwater Investigation
Fremont County, Pavillion, Wyoming
Wyoming Department of Environmental Quality
122 West 25th Street, 4 West
Cheyenne, Wyoming 82002

PREPARED BY

Acton • Mickelson • Environmental, Inc.
1107 Investment Boulevard, Suite 290
El Dorado Hills, California 95762
(916) 939-7550

AME Project Number 90081.08s

PREPARER

Dennis M. Jones
Project Geologist

Date 10/1/14

REVIEWERS

Barbara J. Mickelson, P.E.
Wyoming Professional Engineer #3866

Date 10/1/14

Michael A. Acton
Principal/Project Manager

Date 10/1/14

OCTOBER 1, 2014

TABLE OF CONTENTS

1. INTRODUCTION 1

2. OBJECTIVES 1

3. BACKGROUND 1

4. WATER-SUPPLY WELL VIDEO SURVEYS 2
   4.1 Overview and Schedule 2
   4.2 Selection of Water-Supply Wells for Video Surveys 3
   4.3 Video Surveys 3

5. EQUIPMENT DECONTAMINATION PROCEDURES 4

6. REPORTING 4

7. REMARKS 4

8. REFERENCES 5

Appendices

A Photographs of Water-Supply Well Head Completions Selected for Video Surveys
B BESST Inc. Work Plan: Pavillion Task 8
C Standard Operating Procedures
D Equipment Blank Analyte List

Tables

1 Water-Supply Wells Selected for Video Surveys

Figures

1 Site Location Map
2 Water-Supply Wells Selected for Downhole Video Surveys

1. INTRODUCTION

This Sampling and Analysis Plan Addendum (SAP Addendum) describes procedures to be followed by Acton • Mickelson • Environmental, Inc. (AME), during video surveys of water-supply wells.

This SAP Addendum follows submittal of the *Sampling and Analysis Plan, 2014 Groundwater Investigation, Fremont County, Pavillion, Wyoming* (SAP) by AME on June 6, 2014, which described procedures for collection of groundwater samples at private water-supply wells and methods to be utilized by analytical laboratories. The SAP was submitted to the Wyoming Department of Environmental Quality, Water Quality Division, Ground Water Section (WDEQ). The first of two sampling events was completed in June 2014; the second event was completed on August 21, 2014.

2. OBJECTIVES

The objective of the work is to assess the private water-supply wells listed in **Table 1** with regard to the following criteria:

- Depth
- Screened interval
- Material type and condition of the casing and screen
- Presence of scaling, sediment, or bacteria
- Well integrity
- Color and clarity of the water
- Gas intrusion
- Water inflow zones
- Other similar observations that may relate to potential water-quality issues

Note that some information may be unobtainable due to well construction or other factors.

3. BACKGROUND

Pavillion is a town of 231 residents in west-central Wyoming (**Figure 1**), which became the subject of a U.S. Environmental Protection Agency (EPA) groundwater investigation in 2008 when residents contacted the EPA about smells, tastes, and adverse changes in the water quality of their domestic wells.

The EPA conducted sampling from March 2009 to April 2012, including:

- March 2009 (Phase 1): Aqueous samples from 35 domestic and 2 municipal wells

- January 2010 (Phase 2): Groundwater samples from 17 domestic, 4 stock, and 2 municipal wells

  - A filter sample from a reverse osmosis system
  - Surface-water and sediment samples from 5 locations along Five-Mile Creek
  - Gas and produced water/condensate samples from 5 production wells
  - Groundwater samples from 3 shallow monitoring wells
  - Soil samples near the perimeter of 3 known pit locations

- June 2010 (Phase 3): Installation of 2 deep monitoring wells to differentiate potential deep versus shallow sources of groundwater contamination
  - September 2010: Gas samples from the well casings of MW01 and MW02
  - October 2010: Groundwater samples from MW01 and MW02 and 3 domestic wells

- April 2011 (Phase 4): Resampling of MW01, MW02, and 8 domestic and 3 stock/irrigation wells

- April 2012 (Phase 5): EPA sampling of MW-1 and MW-2 and six domestic wells

The EPA released the results of their sampling at a public meeting in November 2011, followed by a draft investigation report in December 2011. The draft report integrated multiple lines of reasoning to formulate an explanation that constituents associated with hydraulic fracturing were at least partially to blame for resident complaints about drinking-water quality.

Questions were subsequently raised about the methodology and interpretation of data in the draft report, leading to U.S. Geological Survey sampling of MW-1 and MW-2 in 2012, multiple extensions of the public comment period on the draft report, and agreement by the EPA in June 2013 to forego finalization of their draft report in favor of further investigation by the State of Wyoming.

4. WATER-SUPPLY WELL VIDEO SURVEYS

4.1 Overview and Schedule

Video surveys will be conducted on selected private water-supply wells, approximately eight (8) wells, during the early fall of 2014. Video surveys will be performed under non-pumping conditions and also under pumping conditions in wells that are equipped with a pump.

Concurrent with the video surveys, AME and WDEQ personnel will interview each well owner regarding the maintenance history, operational issues or events, surface issues that may affect the well, and water quality within the well. The interview will follow a questionnaire developed in advance of the work.

Access to the wells for video surveys has been obtained by WDEQ in advance, using written access agreements.

4.2 Selection of Water-Supply Wells for Video Surveys

On May 21 and 22, 2014, AME personnel completed a reconnaissance of water-supply wells included in the sampling program, and on June 10 through 20 and August 12 through 21, 2014 completed the first and second groundwater sampling events, respectively. Information from the site reconnaissance and subsequent groundwater sampling for each well to be video-surveyed is provided in **Table 1**.

In general, wells were selected for the video survey based on the following characteristics:

- Included in the groundwater sampling set of wells
- Well head is accessible (e.g., not in a pit or covered/obstructed by a permanent structure)
- Equipped with a minimum 1-inch-diameter access port or other larger opening, or,
- Equipped with a bolted sanitary well cap that may be removed for access to the casing without requiring disconnection of piping

Water-supply wells LD02, PGDW05, PGDW20, PGDW23, PGDW41A, PGDW41B, PGDW44, and PGDW49 were selected for video surveys (**Figure 2**). Photographs of water-supply wellhead configurations are provided in Appendix A.

Personnel from WDEQ, AME, and BESST, Inc. (BESST) will conduct further reconnaissance of wells not initially selected for video survey, to assess whether additional wells can be included in the video survey. This further reconnaissance will be conducted during the video survey timeframe.

4.3 Video Surveys

Video surveys will be performed at the water-supply wells listed in **Table 1**. At wells equipped with sanitary well caps, access for the video camera will be assessed once the cap is removed. All equipment and wellheads will be decontaminated prior to the work as described in the attached BESST Work Plan included as Appendix B and in Section 5 below.

Video surveys will be performed by BESST using a GeoVision™ Nano Camera in conjunction with a nano rotating mirror. This video camera system is 0.75 inch in diameter, allowing for surveys of water-supply wells without removing pumps or other equipment from the casing. Obstacles, including but not limited to pumps, wiring, and other pump related equipment, may limit the depth to which the camera system can be lowered in the well. As a result, the depth to which the camera system can be lowered in each well will be determined by WDEQ, in consultation with AME and BESST, in the field based upon observations made prior to or during lowering of the camera system. The goal is to lower the camera system to the target depth, or as deep as possible without endangering the camera system or pump and associated equipment. Video will be performed under non-pumping conditions and also under pumping conditions in wells that are equipped with a pump. Further information on the video surveys is provided in the BESST Work Plan, presented as Appendix B.

5. EQUIPMENT DECONTAMINATION PROCEDURES

Tools and equipment used to remove access port plugs and sanitary well caps will be disinfected prior to use by a solution of sodium hypochlorite. In advance of removing access port plugs or sanitary well caps, they will be cleaned with an Alconox detergent wash and distilled water rinse followed by saturation with a 1 percent solution of sodium hypochlorite. The procedure for decontaminating and disinfecting well heads and tools is included in Appendix C.

The video camera system and cable will be decontaminated and disinfected prior to deployment into and upon removal from boreholes by an Alconox detergent wash and distilled water rinse followed by saturation with a 1 percent solution of sodium hypochlorite (Appendix B).

Two equipment blanks will be obtained for laboratory analysis to check that contaminants are not introduced into the wells from the downhole video equipment. The first equipment blank will be collected prior to conducting the video survey in the first well. The second sample will be collected at a random time during later well video events. The equipment blanks will be analyzed for the list of parameters included as Appendix D. The equipment blanks will be collected by AME personnel as outlined in the BESST Work Plan, presented as Appendix B, and in accordance with procedures in the SAP.

Details of decontamination and disinfection procedures are provided in the BESST Work Plan, presented as Appendix B.

6. REPORTING

Results of the video survey will be provided in *Preliminary Report No. 2 – Downhole Video and Well Owner Interviews*, which will include a written interpretation of well construction and water conditions observed in surveyed wells, and as described in State Engineer's Office data when available, as outlined in the objectives. The report will include a tabular summary of observations in each well by depth. The information will also be included in the Preliminary Final Draft Report. Video electronic files on DVDs or other WDEQ-approved electronic media will be provided with the report.

7. REMARKS

This SAP Addendum represents our professional opinions, which are based in part on client-supplied and currently available information and are arrived at in accordance with accepted hydrogeologic and engineering practices at this time and location. Other than this, no warranty is implied or intended. This report was prepared solely for the use of our client. Any reliance on the information contained herein by third parties shall be at such parties' sole risk.

8. REFERENCES

AME. 2014. *Sampling and Analysis Plan, 2014 Groundwater Investigation, Fremont County, Pavillion, Wyoming*. Submitted to the Wyoming Department of Environmental Quality. June 6.

TABLE 1

WATER-SUPPLY WELLS SELECTED FOR VIDEO SURVEYS

Well ID	Latitude	Longitude	Original Well Use	Well Status	Well Location and Surrounding Land Use	Total Depth	Casing Diamater	Casing Material	Pump Type	Depth to Water	Measurement Method	Well Head Description	Remarks	Access Port	Video Camera Access
LD02	43.251542	-108.591198	Never used	Not used	Well is located near residence. Open access to well. Adjacent land use surrounding residence is agricultural use and farming equipment.	610	6	PVC	None	166.1	Acoustic	6-inch PVC casing with 6-inch PVC well cap. No pump in well. No piping from well. Slip cap can be removed.	Well has never been in production because of odor. Well is not plumb which caused EPA downhole sampling pump to become stuck, leading to difficult removal. EPA used bailer to purge. (?)	Y	Yes. Requires removal of PVC slip cap.
PGDW05	43.258851	-108.612630	Domestic supply	In use, low yield	Well is located within lawn adjacent to residence. Adjacent land use surrounding residence is agricultural and livestock use.	210	7	Steel	Submersible	-	-	7-inch diameter metal casing. Pitless adapter with 1-inch pipe. Top of well riser is near ground surface in vault and could be removed for video w/o entering vault. 5-bolt aluminum watertight well cap.	Well is water supply to house. Owner said well has lost production capacity and runs dry. EPA sampled at wellhead by removing well cap and mechanically lifting pump and from faucet in mudroom. Coordinates for sample spigot are offset 10.5 feet to N of spigot.	N	Yes. Requires removal of 4-bolt well cap. The well will require additional accessment once the cap is removed to determine whether conducting the downhole video will be attempted.
PGDW20	43.251666	-108.591265	Domestic supply	Not used	Well is located near residence. Open access to well. Adjacent land use surrounding residence is agricultural use and farming equipment. Cow manure present on ground around well.	380	5	Steel	Submersible	166	Estimated from LD02	5-inch metal casing. Pitless adapter that goes to pump house. 4-bolt ABS watertight well cap. No access port.	Was used as domestic well for residence; however, cistern system was installed at residence (has RO system and pressure tank with booster pumps). Well original TD 410 feet collapsed to 380 feet. Hydrant was EPA sampling point. OWNER HAS TO ADJUST PUMPHOUSE VALVES PRIOR TO OUR SAMPLING. Horse manure in corral. Cistern installed at residence.	N	Yes. Requires removal of 4-bolt well cap. The well will require additional accessment once the cap is removed to determine whether conducting the downhole video will be attempted.
PGDW23	43.248660	-108.622587	Domestic supply	In use	Well is located near residence. Open access to well. Adjacent land use surrounding residence is agricultural use and property is sloped.	475	5	PVC	Submersible	120	Estimated from well log	6-inch PVC casing. Pitless adapter goes to pressure tank under house. Has freezeless yard hydrant within 5-feet of wellhead. Has 4-bolt ABS watertight well cap. There is no access port	Septic is located north of house.	N	Yes. Requires removal of 4-bolt well cap. The well will require additional accessment once the cap is removed to determine whether conducting the downhole video will be attempted.
PGDW41A	43.262126	-108.637860	Domestic supply	Stock, irrigation	Well is located near residence. Originally was told there was a single well. Two wells were identified. Open access to well. Adjacent land use surrounding residence is agricultural use and livestock use. Owners had cattle die after drinking well water.	376	6	PVC	Submersible	-		7-foot vault houses pump breakers and pressure tanks from wells 41a and 41b. 6-inch PVC casing. Pitless adapter goes to vault containing breaker, valves, and pressure tanks. Has 4-bolt ABS watertight well cap without access port.	Cistern installed at residence. Owners report cattle died after drinking well water.	N	Yes. Requires removal of 4-bolt well cap. The well will require additional accessment once the cap is removed to determine whether conducting the downhole video will be attempted.
PGDW41B	43.262139	-108.637845	Domestic supply	Stock, irrigation	Well is located near residence. Originally was told there was a single well. Two wells were identified. Open access to well. Adjacent land use surrounding residence is agricultural use and livestock use. Owners had cattle die after drinking well water.	70	8	PVC	Submersible	-	-	7-foot vault houses pump breakers and pressure tanks from wells 41a and 41b. 8-inch PVC casing. Pitless adapter goes to vault containing breaker, valves, and pressure tanks. Has 4-bolt ABS watertight well cap without access port.	Cistern installed at residence. Owners report cattle died after drinking well water.	N	Yes. Requires removal of 4-bolt well cap. The well will require additional accessment once the cap is removed to determine whether conducting the downhole video will be attempted.

TABLE 1

WATER-SUPPLY WELLS SELECTED FOR VIDEO SURVEYS

Well ID	Latitude	Longitude	Original Well Use	Well Status	Well Location and Surrounding Land Use	Total Depth	Casing Diamater	Casing Material	Pump Type	Depth to Water	Measurement Method	Well Head Description	Remarks	Access Port	Video Camera Access
PGDW44	43.250277	-108.626442	Stock, irrigation	In use	Access to well is limited and would require partial removal of wood floor to access wellhead. Adjacent land use surrounding residence is agricultural use and property is sloped.	750	9	Steel	Submersible	278	Acoustic	Well is 9-inch diameter steel casing. Pitless adapter to black plastic piping manifold. No well cap or seal present (need to unscrew wood floor for access to well for open access to well). Pressure tank plumbed on opposite side of plastic manifold and is after sampling location.	Former Shell exploratory well. Hydrant was EPA sampling point. Able to supply drinking water for 750 head of horses during summer per owner.	Y	Yes. Direct access to well.
PGDW49	43.255080	-108.618107	Stock supply	In use	Well is at location of livestock holding pen, and cow manure is present. Adjacent land use surrounding residence is agricultural and livestock use.	50	6	Steel	Submersible	10.1	Acoustic	6-inch metal well casing. No pitless adapter. Cast iron well cap with 3/4-inch access port. Piping above well cap.	Cow manure on ground around well.	Y	Yes. Lift and slide well cap to allow access.

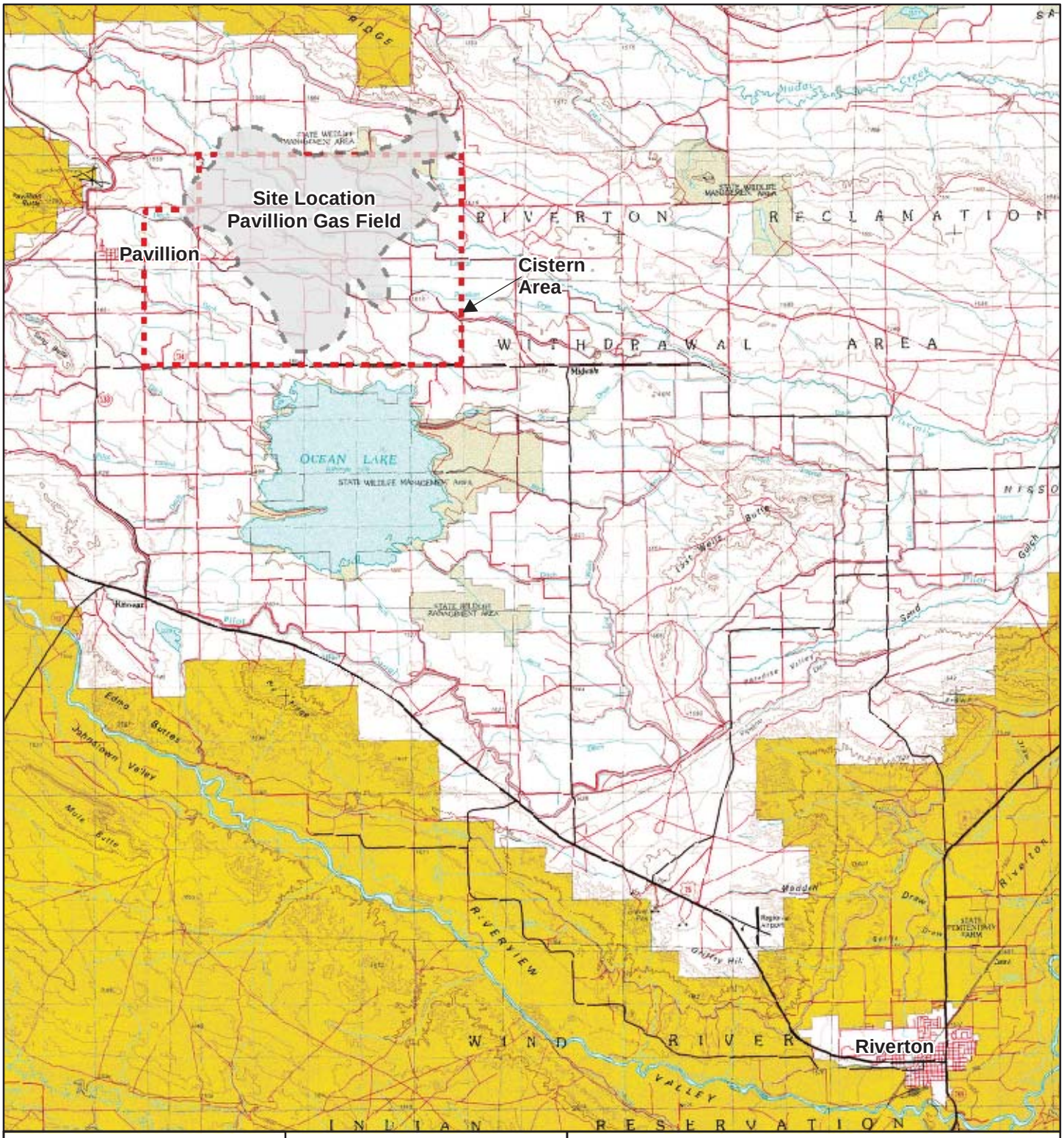

N

0 7,000 14,000

Feet

FIGURE 1

SITE LOCATION

Pavillion 2014 Groundwater Investigation
Freemont County, Wyoming

AME
Engineers and Earth Scientists

1107 Investment Blvd., #290, El Dorado Hills, California 95762 (916) 939-7550

2014-07-09 T:\90081_Pavillion\SAP_ADD\MXD\Fig01_Site_Location_Map.mxd JW

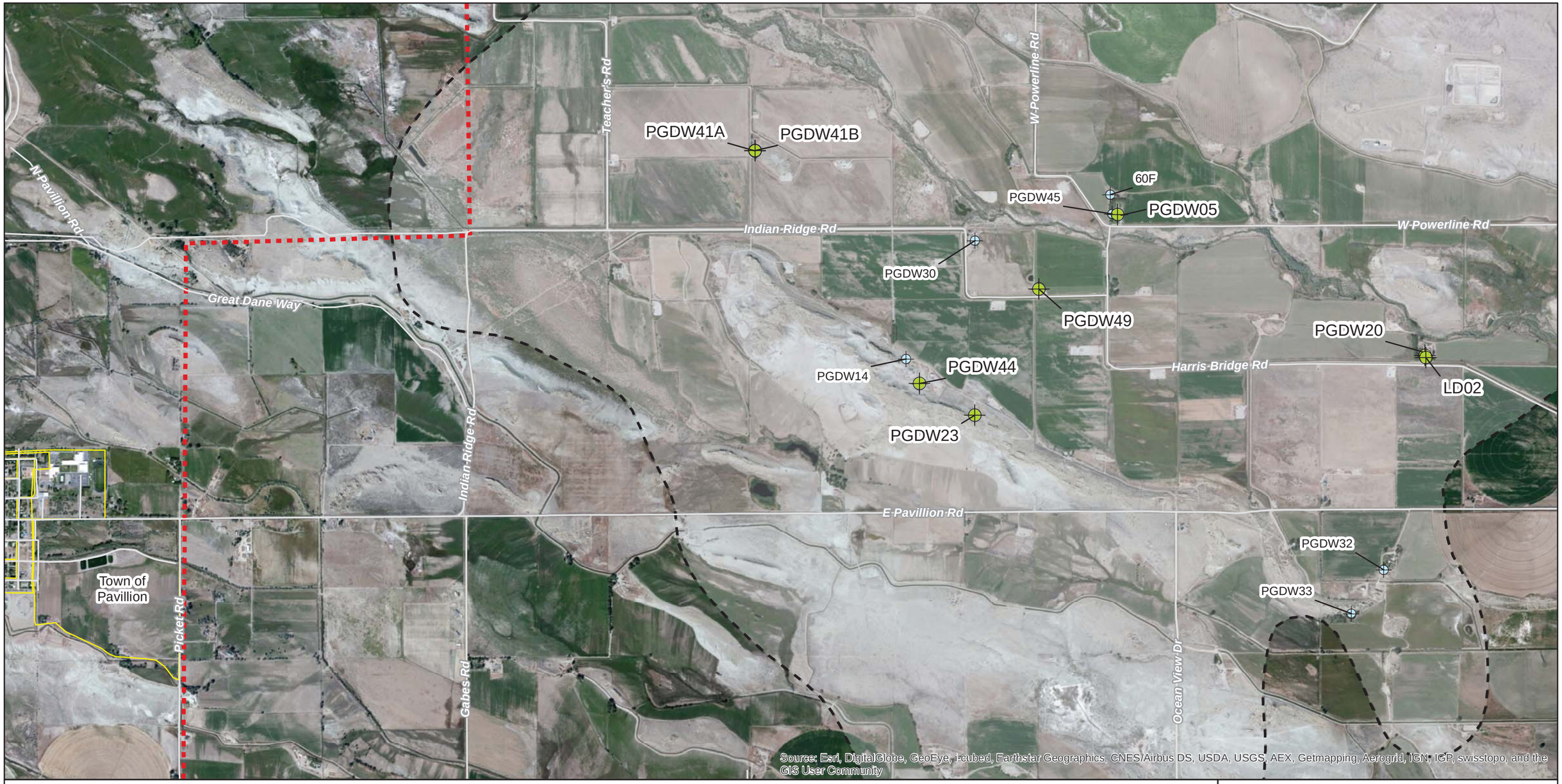

LEGEND

PGDW20 — WATER-SUPPLY WELL LOCATION AND DESIGNATION SELECTED FOR DOWNHOLE VIDEO SURVEY

PGDW32 — WATER-SUPPLY WELL LOCATION AND DESIGNATION NOT INCLUDED IN DOWNHOLE VIDEO SURVEY

MAJOR ROADS AND HIGHWAYS

CISTERN AREA

PAVILLION GAS FIELD

N

0 900 1800

1 in = 1,800 feet

Notes:
1. Water-supply well locations were collected with sub-meter GPS equipment by AME, 2014.
2. All other locations provided by WY DEQ; locations and dimensions are approximate.

FIGURE 2

WATER-SUPPLY WELLS SELECTED FOR DOWNHOLE VIDEO SURVEYS

Pavillion 2014 Groundwater Investigation
Freemont County, Wyoming

AME
Engineers and Earth Scientists

1107 Investment Blvd., #290, El Dorado Hills, California 95762 (916) 939-7550

2014-07-09 T:\90081_Pavillion\SAP_ADD\MXD\Fig02_Selected_Water-Supply_Wells_Downhole_Video.mxd JW

APPENDIX A

Photographs of Water-Supply Well Head Completions Selected for Video Surveys

Well LD02

Well PGDW05

Well PGDW20

Well PGDW23

Well PGDW41A

Well PGDW41B

05.22.2014 14:49
Well PGDW44

Well PGDW49

APPENDIX B

BESST, Inc. Work Plan: Pavillion Task 8

BESST INC.
GLOBAL SUBSURFACE TECHNOLOGIES

Work Plan:
Pavillion Task 8
Fall 2014

I. Project Summary

The purpose of this profiling event is to conduct video inspection of approximately eight domestic water wells to document and evaluate well construction and integrity, and provide expert opinion on potential water quality issues due to well construction or other observed conditions.

II. Introduction

BESST Inc. will perform downhole video camera surveys using a ¾ inch GeoVision™ Nano Camera in conjunction with a nano rotating mirror to allow a side scan of the sides of the well.

The video camera surveys will be performed under pumping and non-pumping conditions (when applicable).

In accordance with BESST Inc. Standard Operating Procedures (SOP) and outlined in Section IV: Procedures/Scope of Work, all equipment and materials will be decontaminated and disinfected prior to deployment into borehole and upon removal to prevent bacteriological cross-contamination as well as to inhibit introduction of other constituents of concern.

This SOP establishes a uniform process for disinfecting any equipment that could contaminate a groundwater source. ***Proper cleaning and disinfectant of equipment will eliminate or minimize potential microbial contamination of ground water, well casings, screens and pumps and subsurface gravel packs and strata.*** **Two (2) equipment blanks will be collected as described in Section IV.**

III. Goals/Objectives

At a minimum the following items for each well in this study will be observed and documented through video and subsequent reporting. Any other unusual or notable findings will also be provided and discussed.

- Well depth
- Screened interval
- Well integrity
- Material type
- Casing condition
- Color and clarity of water
- Absence or presence of scaling, sediment, and microbial biofilms
- Gas intrusion
- Groundwater inflow
- Other similar observations that may relate to potential water quality issues

The final report will include field notes, a written interpretation of the well construction and water conditions observed in the well as outlined above, as well as any information related to potential water quality issues and contaminant sources. The report will include a tabular summary of each well on observations by depth.

Video electronic files will be provided on DVDs or other approved media.

THIS DOCUMENT MAY CONTAIN INFORMATION THAT IS CONFIDENTIAL OR PRIVILEGED.
If you are not the intended recipient, you are hereby notified that any dissemination, distribution or copying of this document is prohibited.

IV. Procedures/Scope of Work

Mobilization and Set-up

BESST staff will arrive in Pavillion at a yet to be determined time, in early fall of 2014.

Well Site Access

BESST Inc. staff will have access to site as described in Appendix A Table 1: Pavillion Well Details provided by AME.

Decontamination and Disinfection Procedure

BESST Inc. staff will take the following steps with use of all equipment that will come in contact with the groundwater well including the video camera and any supporting cables or accessories to prevent contamination. One team member ("decon lead") will be specifically assigned to handle the disinfection and decontamination of the equipment while an additional team member ("video lead") will deploy the equipment.

The team will implement the following procedures prior to conducting the video survey in each water supply well:

1. Ensure that camera/cable system is wrapped in parafilm and stored in the transport case when not in use to prevent contamination.
2. Prevent equipment from contacting the ground or other surfaces through the use of disposal plastic sheeting once removed from its transportation box or case.
3. Ensure all video camera equipment including winch and cables are visibly clean of debris prior to decontamination and disinfection.
4. Prior to deployment downhole, wipe down all tools and equipment with new, clean Scott shop towels soaked with Alconox anionic detergent. A clean, decontaminated tub will be used to clean the camera cable as it is lowered into the well. The tub will be cleaned with Alconox detergent, rinsed with distilled water and disinfected with a solution of 1% sodium hypochlorite prior to being used to clean the camera and cable. The spool and winch will be cleaned and rinsed to the extent practicable with Alconox detergent, triple rinsed with distilled water and disinfected with a 1% sodium hypochlorite solution. The tub will be decontaminated and disinfected in between each use. Alternatively, clean new plastic sheeting may be used to line the tub each time it is used instead of the decon/disinfection procedure.
5. Unwound cable will be pulled through Alconox detergent in the cleaned tub before it enters the well. The tub will be placed between the camera spool and the counting wheel.
6. Triple rinse the camera and unwound cable with distilled water after the cable leaves the soaking tub. The triple rinsing will be performed by spraying the camera and cable with distilled water from a spray bottle. The initial pH and chlorine residual of the distilled water prior to rinsing will be tested as a control.
7. Cleaning validation of Alconox will be performed through pH measurement of rinse water. PH 1-14 test paper litmus strips will be used to confirm no significant change in the pH.
8. Disinfect all equipment including camera and supporting cables prior to deployment downhole with a solution of 1% sodium hypochlorite. The solution will be applied directly to the equipment with a squeeze wash bottle and then swabbed with a new, clean Scott shop towel to ensure maximum coverage.
9. Triple rinse the camera and cable following the disinfection step with distilled water as described in #6.
10. Run the camera and cable into the well using a new, clean shop towel to remove any excess liquid present on the equipment.

THIS DOCUMENT MAY CONTAIN INFORMATION THAT IS CONFIDENTIAL OR PRIVILEGED.
If you are not the intended recipient, you are hereby notified that any dissemination, distribution or copying of this document is prohibited.

11. During the retrieval process, all equipment including camera and supporting cables will be sprayed via squeeze wash bottle with the 1% sodium hypochlorite solution and swabbed with a new, clean Scott shop towel as a further preventive measure to avoid any contamination.
12. All rinse water produced during this procedure will be captured in a catchment tray and then transferred to a covered 5 gallon container with lid.
13. Chlorine in rinse water will be neutralized through the stepped addition of potassium metabisulfite until chlorine residual is below detection. Neutralization will be validated through chlorine test strips. This step is to prevent any damage to vegetation due to the presence of chlorine.
14. All fluids resulting from decontamination and disinfection procedures will be discharged to the ground surface at a location approved by the well owner after neutralization if applicable.
15. Field staff directly handling equipment will wear new, clean nitrile gloves.

Two equipment blanks will be obtained for laboratory analysis to confirm that contaminants are not introduced into the wells from the downhole video equipment. The first equipment blank will be collected prior to videoing the first well. The second sample will be collected at a random time during later well video events. The equipment blank will be analyzed for the list of parameters included as Appendix D in the SAP Addendum. The equipment blanks will be collected by AME personnel in accordance with procedures in the AME Sampling and Analysis Plan (SAP).

The team will implement the following procedures in advance of collection of each equipment blank:

1. Transfer the camera/cable following the triple rinse described in Step 9 above into a dedicated tub. This tub can be decontaminated and disinfected as described above using organic-free de-ionized water supplied by the contract laboratory, or be lined with new, clean plastic.

2. Conduct a rinse of the camera/cable with a volume of organic-free de-ionized water supplied by the contract laboratory sufficient to allow collection of the samples required for analyses of the parameters specified in Appendix D of the SAP Addendum. The minimum volume required for the analyses specified is estimated at approximately 9 liters.

3. AME personnel will collect an equipment blank from this rinse water using a peristaltic pump with tubing dedicated for each equipment blank.

4. The samples will be collected by AME personnel in accordance with the SAP.

Preparation of Alconox Solution:

A fresh 1% solution (10 grams per liter) will be made by mixing 10 grams of Alconox powdered precision cleaner per liter of distilled water.

Preparation of Sodium Hypochlorite Solution

Using only NSF/ANSI approved “fragrance free” bleach:

- **If using 5% Sodium Hypochlorite (bleach),** blend one (1) part 5% bleach with 4 parts distilled water in a corrosion resistant spray canister.
- **If using 8% Sodium Hypochlorite (bleach),** blend one (1) part 8% bleach with 7 parts of distilled water in a corrosion resistant spray canister.

THIS DOCUMENT MAY CONTAIN INFORMATION THAT IS CONFIDENTIAL OR PRIVILEGED.
If you are not the intended recipient, you are hereby notified that any dissemination, distribution or copying of this document is prohibited.

Well Site Equipment Placement Plan

BESST Inc. Staff will set up the clean equipment according to the following placement plan. This plan maximizes the efficiency of decontamination procedures with camera survey operations (see figure below).

1. Set up the camera spool at a distance no greater than 10 ft from the sawhorse and counting wheel. The camera spool connects to the counting wheel with a 13 ft long cable. The video (CD) recorder, power, and viewing screen are connected with cables less than 5 ft long.
2. The soaking tub (see decontamination step 5) will be placed between the counting wheel (3) and the camera spool (1).
3. The camera cable will be pulled through the counting wheel (3) before it enters the well.
4. The clean camera and camera cable are lowered down the well.

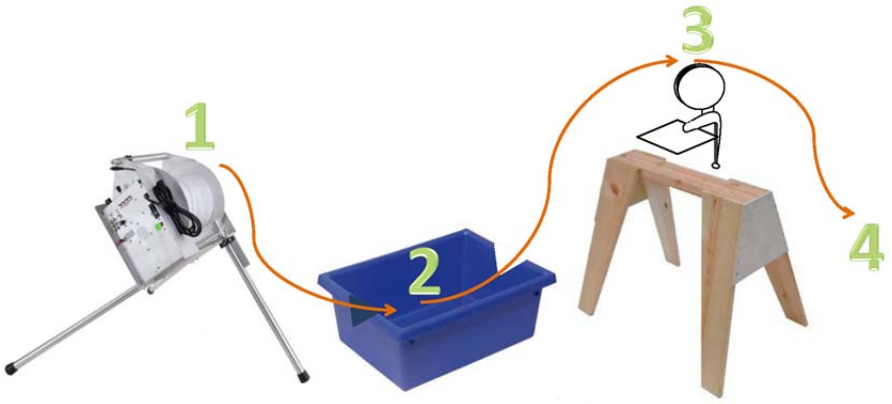

Video Camera Survey

BESST Inc. staff will perform approximately eight (8) separate video camera surveys under non-pumping conditions during the video camera descent and under pumping conditions, if a pump is present, during the video camera ascent as described below.

As discussed in Section 4.3 of the SAP Addendum, pumps and other obstructions will be present in the wells. Care must be taken to prevent the camera and other equipment from being stuck in the hole. While the goal is to video as deep as possible in every well, the depth may be limited to obstructions. The onsite WDEQ personnel, in consultation with AME and BESST personnel, will be responsible for making the decision as to how deep it is safe to proceed.

The video logging tool is a downward looking camera with integral light emitting diodes (LEDs) to provide illumination. The video camera survey will be conducted using the GeoVision Nano Camera. This tool is connected to a single triaxial cable containing the video and power conductors. The cable is also used to measure the depth of the camera.

The cable and tool will be raised through the use of a winch supported on a tripod base (see photo below) measuring 24” x 24” x 19”.

THIS DOCUMENT MAY CONTAIN INFORMATION THAT IS CONFIDENTIAL OR PRIVILEGED.
If you are not the intended recipient, you are hereby notified that any dissemination, distribution or copying of this document is prohibited.

As described in the Goals and Objectives Section, the video lead will document and determine the well construction and current physical state of each well. The following items, at a minimum, for each well in this study will be observed and documented through video:

- Well depth
- Screened interval(s)
- Well integrity
- Material type
- Casing condition
- Color and clarity of water
- Absence or presence of scaling, sediment, and microbial biofilms
- Gas intrusion
- Groundwater inflow if noted
- Other similar observations that may relate to potential water quality issues

Field observations of the site and well conditions will be made and documented in field notes at the time of the video survey. The order of events for camera deployment after decontamination and disinfection with respect to pump operation and water level measurement can be divided into three components as follows:

A: Static Survey

1. Deploy camera unit. See decontamination procedure (pg. 3)
2. Film well to the total depth, or deepest possible depth
3. Film well while pulling camera up to two (2) ft above water level in preparation for next survey component.

B: Draw Down Survey: Static to Pumping Water Level

4. Turn pump on while camera is two (2) feet above water and film/view and time draw down inside well as it proceeds. Follow draw down with camera as water level drops. Make notes during field observation and when complete proceed to the next step.
5. Film the dropping water level. Observe the water surface for gas bubbles. The pump may need to be turned on and off several times for observation process. If this is the case, time how long it takes for draw down to stabilize each time. Note: After draw down to stable pumping water level is determined, immerse camera into water about 1 foot and look for bubbles. Keep the camera in the water when pump is turned off and allow well to recover. Then turn pump back on with

THIS DOCUMENT MAY CONTAIN INFORMATION THAT IS CONFIDENTIAL OR PRIVILEGED.
If you are not the intended recipient, you are hereby notified that any dissemination, distribution or copying of this document is prohibited.

camera still immersed in the water and look for bubbles. Perform this step as many times as necessary until either bubbles are observed or the video lead is certain no bubbles are present.

C: Dynamic Survey

6. Turn pump off. This is to prevent the camera from being pulled into the pump as it passes by the intake.
7. Lower camera past pump motor (if possible) and then turn pump back on. The distance the camera is lowered past the pump before restart will be determined by the field team on a well by well basis. Wait for draw down to stabilize using the time recorded above in Step 5 to determine when to begin the dynamic survey. This step also identifies the depth of the pump for reference.
8. During the dynamic survey the pump will be turned on and off at points determined by the downhole video lead.
9. Continue to film and lower the camera into the well to the deepest possible depth while pumping. Raise camera while continuing to record to an elevation below the pump intake. This elevation will be determined by the field team on a well by well basis.
10. With camera at the elevation described in Step 9 above, turn pump off to prevent camera from being pulled into the intake and raise camera to an elevation above the pump. This elevation will be determined by the field team on a well by well basis. When the camera is at the determined elevation above the pump, turn pump back on and continue recording as camera is removed from well.
11. Decontaminate camera cable while pulling out of the well. See decontamination procedure (pg. # 4 Step 11)

Refer to the following appendices for detailed health safety and data information on the products and equipment to be used:

- Appendix B: Product Data Sheet: Nano Camera
- Appendix C: Product Data Sheet: Nano Rotating Mirror
- Appendix D: Alconox MSDS, Sodium Hypochlorite MSDS, Potassium Metabisulfite MSDS
- Appendix E: Alconox Technical Bulletin

V. Timetable

	Description of Work	Start and End Dates
Phase One	Mobilize	Mob TBD
Phase Two	Perform access and video camera surveys	Mob date and Mob date plus 5 days
Phase Three	Review video and prepare report	Mob date plus 9 days and Mob date plus 20 days
Phase Four	Internal review; deliver field notes, video electronic files and preliminary findings to AME	Mob date plus 23 days and Mob date plus 27 days
Phase Five	Incorporate comments and deliver final report to AME	Mob date plus 34days

THIS DOCUMENT MAY CONTAIN INFORMATION THAT IS CONFIDENTIAL OR PRIVILEGED.
If you are not the intended recipient, you are hereby notified that any dissemination, distribution or copying of this document is prohibited.

VI. Key Personnel

BESST Inc. Team

Project Manager/Decon Lead: Debra Cerda dcerda@bessstinc.com (512) 785-6813
Downhole Video Lead: Kim Miles kmiles@besstinc.com (907) 723-0686
Technical Support: Noah Heller nheller@besstinc.om

THIS DOCUMENT MAY CONTAIN INFORMATION THAT IS CONFIDENTIAL OR PRIVILEGED.
If you are not the intended recipient, you are hereby notified that any dissemination, distribution or copying of this document is prohibited.

TABLE 1

WATER-SUPPLY WELLS SELECTED FOR VIDEO SURVEYS

Well ID	Latitude	Longitude	Original Well Use	Well Status	Well Location and Surrounding Land Use	Total Depth	Casing Diamater	Casing Material	Pump Type	Depth to Water	Measurement Method	Well Head Description	Remarks	Access Port	Video Camera Access
LD02	43.251542	-108.591198	Never used	Not used	Well is located near residence. Open access to well. Adjacent land use surrounding residence is agricultural use and farming equipment.	610	6	PVC	None	166.1	Acoustic	6-inch PVC casing with 6-inch PVC well cap. No pump in well. No piping from well. Slip cap can be removed.	Well has never been in production because of odor. Well is not plumb which caused EPA downhole sampling pump to become stuck, leading to difficult removal. EPA used bailer to purge. (?)	Y	Yes. Requires removal of PVC slip cap.
PGDW05	43.258851	-108.612630	Domestic supply	In use, low yield	Well is located within lawn adjacent to residence. Adjacent land use surrounding residence is agricultural and livestock use.	210	7	Steel	Submersible	-	-	7-inch diameter metal casing. Pitless adapter with 1-inch pipe. Top of well riser is near ground surface in vault and could be removed for video w/o entering vault. 5-bolt aluminum watertight well cap.	Well is water supply to house. Owner said well has lost production capacity and runs dry. EPA sampled at wellhead by removing well cap and mechanically lifting pump and from faucet in mudroom. Coordinates for sample spigot are offset 10.5 feet to N of spigot.	N	Yes. Requires removal of 4-bolt well cap. The well will require additional accessment once the cap is removed to determine whether conducting the downhole video will be attempted.
PGDW20	43.251666	-108.591265	Domestic supply	Not used	Well is located near residence. Open access to well. Adjacent land use surrounding residence is agricultural use and farming equipment. Cow manure present on ground around well.	380	5	Steel	Submersible	166	Estimated from LD02	5-inch metal casing. Pitless adapter that goes to pump house. 4-bolt ABS watertight well cap. No access port.	Was used as domestic well for residence; however, cistern system was installed at residence (has RO system and pressure tank with booster pumps). Well original TD 410 feet collapsed to 380 feet. Hydrant was EPA sampling point. OWNER HAS TO ADJUST PUMPHOUSE VALVES PRIOR TO OUR SAMPLING. Horse manure in corral. Cistern installed at residence.	N	Yes. Requires removal of 4-bolt well cap. The well will require additional accessment once the cap is removed to determine whether conducting the downhole video will be attempted.
PGDW23	43.248660	-108.622587	Domestic supply	In use	Well is located near residence. Open access to well. Adjacent land use surrounding residence is agricultural use and property is sloped.	475	5	PVC	Submersible	120	Estimated from well log	6-inch PVC casing. Pitless adapter goes to pressure tank under house. Has freezeless yard hydrant within 5-feet of wellhead. Has 4-bolt ABS watertight well cap. There is no access port	Septic is located north of house.	N	Yes. Requires removal of 4-bolt well cap. The well will require additional accessment once the cap is removed to determine whether conducting the downhole video will be attempted.
PGDW41A	43.262126	-108.637860	Domestic supply	Stock, irrigation	Well is located near residence. Originally was told there was a single well. Two wells were identified. Open access to well. Adjacent land use surrounding residence is agricultural use and livestock use. Owners had cattle die after drinking well water.	376	6	PVC	Submersible	-		7-foot vault houses pump breakers and pressure tanks from wells 41a and 41b. 6-inch PVC casing. Pitless adapter goes to vault containing breaker, valves, and pressure tanks. Has 4-bolt ABS watertight well cap without access port.	Cistern installed at residence. Owners report cattle died after drinking well water.	N	Yes. Requires removal of 4-bolt well cap. The well will require additional accessment once the cap is removed to determine whether conducting the downhole video will be attempted.
PGDW41B	43.262139	-108.637845	Domestic supply	Stock, irrigation	Well is located near residence. Originally was told there was a single well. Two wells were identified. Open access to well. Adjacent land use surrounding residence is agricultural use and livestock use. Owners had cattle die after drinking well water.	70	8	PVC	Submersible	-	-	7-foot vault houses pump breakers and pressure tanks from wells 41a and 41b. 8-inch PVC casing. Pitless adapter goes to vault containing breaker, valves, and pressure tanks. Has 4-bolt ABS watertight well cap without access port.	Cistern installed at residence. Owners report cattle died after drinking well water.	N	Yes. Requires removal of 4-bolt well cap. The well will require additional accessment once the cap is removed to determine whether conducting the downhole video will be attempted.

TABLE 1

WATER-SUPPLY WELLS SELECTED FOR VIDEO SURVEYS

Well ID	Latitude	Longitude	Original Well Use	Well Status	Well Location and Surrounding Land Use	Total Depth	Casing Diamater	Casing Material	Pump Type	Depth to Water	Measurement Method	Well Head Description	Remarks	Access Port	Video Camera Access
PGDW44	43.250277	-108.626442	Stock, irrigation	In use	Access to well is limited and would require partial removal of wood floor to access wellhead. Adjacent land use surrounding residence is agricultural use and property is sloped.	750	9	Steel	Submersible	278	Acoustic	Well is 9-inch diameter steel casing. Pitless adapter to black plastic piping manifold. No well cap or seal present (need to unscrew wood floor for access to well for open access to well). Pressure tank plumbed on opposite side of plastic manifold and is after sampling location.	Former Shell exploratory well. Hydrant was EPA sampling point. Able to supply drinking water for 750 head of horses during summer per owner.	Y	Yes. Direct access to well.
PGDW49	43.255080	-108.618107	Stock supply	In use	Well is at location of livestock holding pen, and cow manure is present. Adjacent land use surrounding residence is agricultural and livestock use.	50	6	Steel	Submersible	10.1	Acoustic	6-inch metal well casing. No pitless adapter. Cast iron well cap with 3/4-inch access port. Piping above well cap.	Cow manure on ground around well.	Y	Yes. Lift and slide well cap to allow access.

GeoVISION™

Borehole Video Systems

www.AlleghenyInstruments.com
Jeff.Hoffer@AlleghenyInstruments.com
800·255·1353 - 540·468·3740

GeoVISION™ Nano Camera

Video Camera
GS-0010

The GeoVISION™ Nano camera is the smallest diameter production borehole video inspection camera made today. The Nano camera is a mere 3/4 inch (2 cm) in diameter and is designed for use in boreholes as small as one inch (2.5 cm) in diameter and at depths up to 2000 feet (600 meters).

The Nano camera has standard NTSC resolution with an aspect ratio of 4:3. Illumination is provided by six high intensity white LEDs. The Nano camera is rated for use up to 1,000 psi and can be used with Light-Duty, Heavy-Duty and Deluxe winches.

The Nano camera can also be used with the Nano Auto Rotating Mirror to allow a side scan of the bore wall. The Nano Auto Rotating Mirror can be set to rotate continuously or to rotate approximately 20°, pause for a few seconds and then continue rotating. The pause in rotation allows maximum resolution for recording the video image.

Specifications:

Weight	10.1 Ounces (286 g)
Dimensions	10-1/4” long x 3/4” diameter (26 cm x 2 cm)
Standard Lens	2.97 mm
Angle of View (in air)	~130°
Aperture	F2.0
CCD	1/3” Sony Super HAD CCD II
Video Format	NTSC
Aspect Ratio	4:3
Horizontal Resolution	550 Lines
Effective Pixels	768 Horizontal x 494 Vertical
Minimum Illumination	0.05 Lux.
Operating Temperature	-40° F ~ 122° F (-40° C~50° C)
Light Source	6 High Intensity White LEDs
Maximum Depth	2000 Feet Underwater (600 meters)
Maximum Pressure	1000 psi
Current Draw	190 mA
Window Material	Sapphire
Exposure Control	No

Compatibility:

Products	**Notes:**
Winch	
Deluxe	
Heavy-Duty	
Light-Duty	
Cable Length	
325 feet (100 meters)	Deluxe, Heavy-Duty or Light-Duty winch.
650 feet (200 meters)	Deluxe or Heavy-Duty winch.
1,000 feet (300 meters)	Deluxe or Heavy-Duty winch.
1,650 feet (500 meters)	Deluxe winch.
2,000 feet (600 meters)	Deluxe winch.

Accessories:

Additional Lights
Auxiliary Single Light
Auxiliary Fixed Eight Light
Auxiliary Adjustable Eight Light
Camera Mounted Options
Nano Rotating Mirror

GeoVISION™

Borehole Video Systems

www.AlleghenyInstruments.com
Jeff.Hoffer@AlleghenyInstruments.com
800·255·1353 - 540·468·3740

Nano Rotating Mirror

Side looking mirror

GS-0012

The GeoVISION™ Nano Rotating Mirror gives the Nano camera the ability to scan the bore wall. Its extremely small size allows it to work in bores as small as one inch in diameter. The mirror is motor driven and rotates automatically. It can be set to rotate continuously or to rotate 20º, pause for about a second and then rotate again. The pause allows for the best possible video and allows for high quality still images to be made from the video.

The Nano Rotating Mirror runs on two CR2 lithium batteries and is rated for use to depths up to 2,000 feet (600 meters) underwater.

Specifications:

Weight	10 Ounces (280 grams)
Diameter	1.75 inche (4.5 cm)
Length	9.25 inches (24.5 cm)
Maximum Depth	2,000 feet (600 meters)
Operating Voltage	6 VDC
Batteries	2 x CR2 Lithium

Compatibility:

GeoVISION™ Nano Camera

Safety Data Sheet

according to 1907/2006/EC (REACH), 1272/2008/EC (CLP), and GHS

Printing date: 31.12.2013 **Revision:** 31.12.2013

1 Identification of the substance/mixture and of the company/undertaking

· **1.1 Product identifier**

· **Trade name: ALCONOX**

· **1.2 Relevant identified uses of the substance or mixture and uses advised against**
No further relevant information available.

· **Application of the substance / the mixture:** Cleaning material/ Detergent

· **1.3 Details of the supplier of the Safety Data Sheet**
· **Manufacturer/Supplier:**
Alconox, Inc.
30 Glenn St., Suite 309
White Plains, NY 10603
Phone: 914-948-4040
· **Further information obtainable from:** Product Safety Department

· **1.4 Emergency telephone number:**
ChemTel Inc.
(800)255-3924, +1 (813)248-0585

2 Hazards identification

· **2.1 Classification of the substance or mixture**
· **Classification according to Regulation (EC) No 1272/2008**

GHS05 corrosion
Eye Dam. 1; H318: Causes serious eye damage.

GHS07
Skin Irrit. 2; H315: Causes skin irritation.

· **Classification according to Directive 67/548/EEC or Directive 1999/45/EC**

Xi; Irritant
R38-41: Irritating to skin. Risk of serious damage to eyes.
· **Information concerning particular hazards for human and environment:**
The product has to be labelled due to the calculation procedure of the "General Classification guideline for preparations of the EU" in the latest valid version.
· **Classification system:**
The classification is according to the latest editions of the EU-lists, and extended by company and literature data.
The classification is in accordance with the latest editions of international substances lists, and is supplemented by information from technical literature and by information provided by the company.

· **2.2 Label elements**
· **Labelling according to Regulation (EC) No 1272/2008**
The product is classified and labelled according to the CLP regulation.

(Contd. on page 2)

Safety Data Sheet
according to 1907/2006/EC (REACH), 1272/2008/EC (CLP), and GHS

Printing date: 31.12.2013 **Revision:** 31.12.2013

Trade name: ALCONOX

(Contd. of page 1)

· **Hazard pictograms**

GHS05

· **Signal word:** Danger

· **Hazard-determining components of labelling:**
sodium dodecylbenzene sulfonate

· **Hazard statements**
H315: Causes skin irritation.
H318: Causes serious eye damage.

· **Precautionary statements**
P280 Wear protective gloves/protective clothing/eye protection/face protection.
P264: Wash thoroughly after handling.
P305+P351+P338: IF IN EYES: Rinse cautiously with water for several minutes. Remove contact lenses, if present and easy to do. Continue rinsing.
P310: Immediately call a POISON CENTER or doctor/physician.
P321: Specific treatment (see on this label).
P362: Take off contaminated clothing and wash before reuse.
P332+P313: If skin irritation occurs: Get medical advice/attention.
P302+P352: IF ON SKIN: Wash with plenty of soap and water.

· **Hazard description:**

· **WHMIS-symbols:**
D2B - Toxic material causing other toxic effects

· **NFPA ratings (scale 0 - 4)**

Health = 1
Fire = 0
Reactivity = 0

· **HMIS-ratings (scale 0 - 4)**

Health = 1
Fire = 0
Reactivity = 0

· **HMIS Long Term Health Hazard Substances**
None of the ingredients is listed.

· **2.3 Other hazards**

· **Results of PBT and vPvB assessment**

· **PBT:** Not applicable.

· **vPvB:** Not applicable.

(Contd. on page 3)

Safety Data Sheet
according to 1907/2006/EC (REACH), 1272/2008/EC (CLP), and GHS

Printing date: 31.12.2013 **Revision:** 31.12.2013

Trade name: ALCONOX

(Contd. of page 2)

3 Composition/information on ingredients

· **3.2 Mixtures**
· **Description:** Mixture of substances listed below with nonhazardous additions.

· **Dangerous components:**		
CAS: 68081-81-2	sodium dodecylbenzene sulfonate Xn R22; Xi R36 Acute Tox. 4, H302; Eye Irrit. 2, H319	10-25%
CAS: 497-19-8 EINECS: 207-838-8 Index number: 011-005-00-2	Sodium Carbonate Xi R36 Eye Irrit. 2, H319	2,5-10%
CAS: 7722-88-5 EINECS: 231-767-1	tetrasodium pyrophosphate substance with a Community workplace exposure limit	2,5-10%
CAS: 151-21-3 EINECS: 205-788-1	sodium dodecyl sulphate Xn R21/22; Xi R36/38 Acute Tox. 4, H302; Acute Tox. 4, H312; Skin Irrit. 2, H315; Eye Irrit. 2, H319	2,5-10%

· **Additional information:** For the wording of the listed risk phrases refer to section 16.

4 First aid measures

· **4.1 Description of first aid measures**
· **After inhalation:** Supply fresh air; consult doctor in case of complaints.
· **After skin contact:**
Immediately wash with water and soap and rinse thoroughly.
If skin irritation continues, consult a doctor.
· **After eye contact:**
Remove contact lenses if worn.
Rinse opened eye for several minutes under running water. If symptoms persist, consult a doctor.
· **After swallowing:**
Rinse out mouth and then drink plenty of water.
Do not induce vomiting; call for medical help immediately.
· **4.2 Most important symptoms and effects, both acute and delayed**
No further relevant information available.
· **4.3 Indication of any immediate medical attention and special treatment needed**
No further relevant information available.

5 Firefighting measures

· **5.1 Extinguishing media**
· **Suitable extinguishing agents:**
CO2, powder or water spray. Fight larger fires with water spray or alcohol resistant foam.

(Contd. on page 4)

(Contd. of page 3)

· **5.2 Special hazards arising from the substance or mixture:** No further relevant information available.
· **5.3 Advice for firefighters**
· **Protective equipment:**
Wear self-contained respiratory protective device.
Wear fully protective suit.
· **Additional information:** No further relevant information available.

6 Accidental release measures

· **6.1 Personal precautions, protective equipment and emergency procedures**
Product forms slippery surface when combined with water.
· **6.2 Environmental precautions:** Do not allow to enter sewers/ surface or ground water.
· **6.3 Methods and material for containment and cleaning up:**
Pick up mechanically.
Clean the affected area carefully; suitable cleaners are:
Warm water
· **6.4 Reference to other sections**
See Section 7 for information on safe handling.
See Section 8 for information on personal protection equipment.
See Section 13 for disposal information.

7 Handling and storage

· **7.1 Precautions for safe handling**
Prevent formation of dust.
Keep receptacles tightly sealed.
· **Information about fire - and explosion protection:** No special measures required.

· **7.2 Conditions for safe storage, including any incompatibilities**
· **Storage:**
· **Requirements to be met by storerooms and receptacles:** No special requirements.
· **Information about storage in one common storage facility:** Not required.
· **Further information about storage conditions:** Protect from humidity and water.
· **7.3 Specific end use(s):** No further relevant information available.

8 Exposure controls/personal protection

· **Additional information about design of technical facilities:** No further data; see item 7.

· **8.1 Control parameters**

· **Ingredients with limit values that require monitoring at the workplace:**	
7722-88-5 tetrasodium pyrophosphate	
REL (USA)	5 mg/m³
TLV (USA)	TLV withdrawn
EV (Canada)	5 mg/m³

(Contd. on page 5)

(Contd. of page 4)

· **Additional information:** The lists valid during the making were used as basis.

· **8.2 Exposure controls**
· **Personal protective equipment:**
· **General protective and hygienic measures:**
Keep away from foodstuffs, beverages and feed.
Immediately remove all soiled and contaminated clothing.
Wash hands before breaks and at the end of work.
Avoid contact with the skin.
Avoid contact with the eyes and skin.
· **Respiratory protection:**
Not required under normal conditions of use.
In case of brief exposure or low pollution use respiratory filter device. In case of intensive or longer exposure use self-contained respiratory protective device.
· **Protection of hands:**

Protective gloves

The glove material has to be impermeable and resistant to the product/ the substance/ the preparation.
Due to missing tests no recommendation to the glove material can be given for the product/ the preparation/ the chemical mixture.
Selection of the glove material on consideration of the penetration times, rates of diffusion and the degradation.
· **Material of gloves**
Butyl rubber, BR
Nitrile rubber, NBR
Natural rubber, NR
Neoprene gloves
The selection of the suitable gloves does not only depend on the material, but also on further marks of quality and varies from manufacturer to manufacturer. As the product is a preparation of several substances, the resistance of the glove material cannot be calculated in advance and has therefore to be checked prior to the application.
· **Penetration time of glove material**
The exact break through time has to be found out by the manufacturer of the protective gloves and has to be observed.
· **Eye protection:**

Safety glasses

· **Body protection:** Protective work clothing

(Contd. on page 6)

Safety Data Sheet
according to 1907/2006/EC (REACH), 1272/2008/EC (CLP), and GHS

Printing date: 31.12.2013 **Revision:** 31.12.2013

Trade name: ALCONOX

(Contd. of page 5)

9 Physical and chemical properties

· **9.1 Information on basic physical and chemical properties**	
· **General Information**	
· **Appearance:**	
Form:	Powder
Colour:	White
· **Odour:**	Odourless
· **Odour threshold:**	Not determined.
· **pH-value (10 g/l) at 20 °C:**	9,5 (- NA for Powder form)
· **Change in condition**	
Melting point/Melting range:	Not Determined.
Boiling point/Boiling range:	Undetermined.
· **Flash point:**	Not applicable.
· **Flammability (solid, gaseous):**	Not determined.
· **Ignition temperature:**	
Decomposition temperature:	Not determined.
· **Self-igniting:**	Product is not self-igniting.
· **Danger of explosion:**	Product does not present an explosion hazard.
· **Explosion limits:**	
Lower:	Not determined.
Upper:	Not determined.
· **Vapour pressure:**	Not applicable.
· **Density at 20 °C:**	1,1 g/cm³
· **Relative density**	Not determined.
· **Vapour density**	Not applicable.
· **Evaporation rate**	Not applicable.
· **Solubility in / Miscibility with water:**	Soluble.
· **Partition coefficient (n-octanol/water):**	Not determined.
· **Viscosity:**	
Dynamic:	Not applicable.
Kinematic:	Not applicable.
· **Solvent content:**	
Organic solvents:	0,0 %
Solids content:	100 %
· **9.2 Other information**	No further relevant information available.

(Contd. on page 7)

Printing date: 31.12.2013 **Revision:** 31.12.2013

Trade name: ALCONOX

(Contd. of page 6)

10 Stability and reactivity

· **10.1 Reactivity**
· **10.2 Chemical stability**
· **Thermal decomposition / conditions to be avoided:**
No decomposition if used according to specifications.
· **10.3 Possibility of hazardous reactions**
Reacts with acids.
Reacts with strong alkali.
Reacts with strong oxidizing agents.
· **10.4 Conditions to avoid:** No further relevant information available.
· **10.5 Incompatible materials:** No further relevant information available.
· **10.6 Hazardous decomposition products:**
Carbon monoxide and carbon dioxide
Phosphorus compounds
Sulphur oxides (SOx)

11 Toxicological information

· **11.1 Information on toxicological effects**
· **Acute toxicity:**
· **Primary irritant effect:**
· **On the skin:** Irritant to skin and mucous membranes.
· **On the eye:** Strong irritant with the danger of severe eye injury.
· **Sensitization:** No sensitizing effects known.
· **Additional toxicological information:**
The product shows the following dangers according to the calculation method of the General EU Classification Guidelines for Preparations as issued in the latest version:
Irritant
Swallowing will lead to a strong caustic effect on mouth and throat and to the danger of perforation of esophagus and stomach.

12 Ecological information

· **12.1 Toxicity**
· **Aquatic toxicity:** No further relevant information available.
· **12.2 Persistence and degradability:** No further relevant information available.
· **12.3 Bioaccumulative potential:** Not worth-mentioning accumulating in organisms
· **12.4 Mobility in soil:** No further relevant information available.
· **Additional ecological information:**
· **General notes:**
Water hazard class 2 (German Regulation) (Self-assessment): hazardous for water.
Do not allow product to reach ground water, water course or sewage system.
Danger to drinking water if even small quantities leak into the ground.
· **12.5 Results of PBT and vPvB assessment**
· **PBT:** Not applicable.

(Contd. on page 8)

(Contd. of page 7)

· **vPvB:** Not applicable.
· **12.6 Other adverse effects:** No further relevant information available.

13 Disposal considerations

· **13.1 Waste treatment methods**
· **Recommendation**
Smaller quantities can be disposed of with household waste.
Small amounts may be diluted with plenty of water and washed away. Dispose of bigger amounts in accordance with Local Authority requirements.
The surfactant used in this product complies with the biodegradability criteria as laid down in Regulation (EC) No. 648/2004 on detergents. Data to support this assertion are held at the disposal of the competent authorities of the Member States and will be made available to them, at their direct request or at the request of a detergent manufacturer.

· **Uncleaned packaging:**
· **Recommendation:** Disposal must be made according to official regulations.
· **Recommended cleansing agents:** Water, if necessary together with cleansing agents.

14 Transport information

· **14.1 UN-Number** · **DOT, ADR, IMDG, IATA, ICAO**	Not Regulated
· **14.2 UN proper shipping name** · **DOT, ADR, IMDG, IATA, ICAO**	Not Regulated
· **14.3 Transport hazard class(es)** · **DOT, ADR, IMDG, IATA, ICAO** · **Class**	Not Regulated
· **14.4 Packing group** · **DOT, ADR, IMDG, IATA, ICAO**	Not Regulated
· **14.5 Environmental hazards:** · **Marine pollutant:**	No
· **14.6 Special precautions for user**	Not applicable.
· **14.7 Transport in bulk according to Annex II of MARPOL73/78 and the IBC Code**	Not applicable.
· **UN "Model Regulation":**	Not Regulated

(Contd. on page 9)

Printing date: 31.12.2013 **Revision:** 31.12.2013

Trade name: ALCONOX

(Contd. of page 8)

15 Regulatory information

· **15.1 Safety, health and environmental regulations/legislation specific for the substance or mixture**
· **United States (USA)**
· **SARA**

· **Section 355 (extremely hazardous substances):**
None of the ingredients is listed.
· **Section 313 (Specific toxic chemical listings):**
None of the ingredients is listed.
· **TSCA (Toxic Substances Control Act):**
All ingredients are listed.

· **Proposition 65 (California):**

· **Chemicals known to cause cancer:**
None of the ingredients is listed.
· **Chemicals known to cause reproductive toxicity for females:**
None of the ingredients is listed.
· **Chemicals known to cause reproductive toxicity for males:**
None of the ingredients is listed.
· **Chemicals known to cause developmental toxicity:**
None of the ingredients is listed.

· **Carcinogenic Categories**

· **EPA (Environmental Protection Agency)**
None of the ingredients is listed.
· **IARC (International Agency for Research on Cancer)**
None of the ingredients is listed.
· **TLV (Threshold Limit Value established by ACGIH)**
None of the ingredients is listed.
· **NIOSH-Ca (National Institute for Occupational Safety and Health)**
None of the ingredients is listed.
· **OSHA-Ca (Occupational Safety & Health Administration)**
None of the ingredients is listed.

(Contd. on page 10)

Safety Data Sheet
according to 1907/2006/EC (REACH), 1272/2008/EC (CLP), and GHS

Printing date: 31.12.2013 **Revision:** 31.12.2013

Trade name: ALCONOX

(Contd. of page 9)

· **Canada**

· **Canadian Domestic Substances List (DSL)**	
All ingredients are listed.	
· **Canadian Ingredient Disclosure list (limit 0.1%)**	
None of the ingredients is listed.	
· **Canadian Ingredient Disclosure list (limit 1%)**	
497-19-8	Sodium Carbonate
7722-88-5	tetrasodium pyrophosphate
151-21-3	sodium dodecyl sulphate

· **15.2 Chemical safety assessment:** A Chemical Safety Assessment has not been carried out.

16 Other information

This information is based on our present knowledge. However, this shall not constitute a guarantee for any specific product features and shall not establish a legally valid contractual relationship.

· **Relevant phrases**
H302: Harmful if swallowed.
H312: Harmful in contact with skin.
H315: Causes skin irritation.
H319: Causes serious eye irritation.

R21/22: Harmful in contact with skin and if swallowed.
R22: Harmful if swallowed.
R36: Irritating to eyes.
R36/38: Irritating to eyes and skin.

· **Abbreviations and acronyms:**
ADR: Accord européen sur le transport des marchandises dangereuses par Route (European Agreement concerning the International Carriage of Dangerous Goods by Road) IMDG: International Maritime Code for Dangerous Goods DOT: US Department of Transportation
IATA: International Air Transport Association
GHS: Globally Harmonized System of Classification and Labelling of Chemicals
ACGIH: American Conference of Governmental Industrial Hygienists
NFPA: National Fire Protection Association (USA)
HMIS: Hazardous Materials Identification System (USA)
WHMIS: Workplace Hazardous Materials Information System (Canada)

ALLIED UNIVERSAL CORPORATION

Headquarters: 3901 NW 115th Avenue, Miami, Florida 33178 Phone: (305) 888 - 2623

MATERIAL SAFETY DATA SHEET

May be used to comply with OSHA's Hazard Communication Standard, 29 CFR § 1910.1200.

TODAY'S DATE: 09/06/07 MSDS NUMBER: 0001

24 HOUR EMERGENCY CHEMICAL SPILL OR RELEASE PHONE NUMBERS:

Allied Universal Corp. *at* ***1-305-483-7732*** *(Digital Beeper) and/or* ***CHEMTREC*** *at* ***1-800-424-9300***

SECTION 1 CHEMICAL PRODUCT/COMPANY IDENTIFICATION

Sodium Hypochlorite

Product Names: Aqua Guard Chlorinating Sanitizer, Aqua Guard Bleach, Liquid Chlorine Solution, Liquid Bleach, Hypochlorite, Hypo and Chlorine Bleach.

Listed Strengths: 10.5%, 12.5% and 15% **CAS Number:** 7681-52-9

Date MSDS Revised: August 2007 (previous revision 11/04)

Product Use: Disinfectant and sanitizer, see product label for all approved uses & instructions.

NSF Approval: Yes. Certified to NSF/ANSI Standard 60. Maximum use in Potable Water is 84 mg/L for 12.5% bleach and 100 mg/L for 10.5% bleach.

NSF Non-Food Compounds Approval: Yes

SECTION 2 HAZARD INGREDIENTS/IDENTITY INFORMATION

Hazardous Ingredient(s): % (w/w) as Sodium Hypochlorite : 10.5-16%

Exposure Standards: None established for Sodium Hypochlorite, as Chlorine exposure standards are:

PEL (OSHA):	1 ppm as Cl_2	**STEL (OSHA):**	3 ppm as Cl_2
TLV (ACGIH):	0.5 ppm as Cl_2	**TWA (ACGIH):**	0.5 ppm as Cl_2
WEEL (AIHA):	2 mg/m3, 15 minute TWA as Cl_2	**STEL (ACGIH):**	1 ppm as Cl_2

Emergency Overview: May cause burns to the eyes, skin and mucous membranes.

SECTION 3 PHYSICAL/CHEMICAL CHARACTERISTICS

Alternate Name(s):	Bleach
Chemical Name:	Sodium Hypochlorite
Chemical Family:	Oxidizing Agent
Molecular Formula:	Na-O-Cl
Form:	Liquid
Appearance:	Water clear to a slight greenish-yellow, or light yellow aqueous solution
Odor:	Chlorine odor
pH:	11-14, dependent upon % weight as Sodium Hypochlorite
Vapor Pressure:	Not available
Vapor Density (Air=1):	Not available
Boiling Point:	Approximately 230º F (110º C)
Freezing Point:	14 F(8% w/w Cl_2 solution), 7 F(10% w/w Cl_2 solution), -3 F (12% w/w Cl_2 solution)
Solubility (Water):	Completely Soluble
Solubility (Other):	Reacts with Many Organic Solvents
Density:	Appx. 10 lbs. per gallon
Evaporation Rate:	Not Available
Specific Gravity:	1.126 (8% w/w Cl_2 solution), 1.163 (10% w/w Cl_2 solution), 1.202 (12% w/w Cl_2 solution), 1.25 (15% w/w Cl_2 solution)
Molecular Weight:	74.5

SECTION 4 STABILITY & REACTIVITY DATA

Chemical Stability	**Stable** __X__	**Unstable** _____

Incompatibility (Conditions to Avoid): Stability decreases with heat and light exposure.

Incompatibility (Materials to Avoid): May react violently with strong acids. Other incompatibles include strong caustics, ammonia, urea, reducing agents, organics, ether and oxidizable materials. Reaction with metals (nickel, iron, cobalt and copper) may produce oxygen gas, which supports combustion. May react with organohalogen compounds to

form spontaneously combustible compounds. May react explosively with nitro- and chloro-organic compounds as well as acids and reducing agents. Acidification liberates chlorine gas.		
Hazardous Decomposition or Byproducts: Chlorine gas. Decomposes with heat and reacts with acids. Hazardous gases/vapors produced are hypochlorous acid, chlorine and hydrochloric acid. Composition depends upon temperature and decrease in pH. Additional decomposition products, which depend on pH, temperature and time, are sodium chloride and chlorate, and oxygen.		
No Mechanical Shock or Impact	**No Static Discharge**	**Oxidizer: No if <12% by weight, Yes if > than 12% by weight**
Hazardous Polymerization	**May Occur _____**	**Will Not Occur __X__**

Note: Sodium Hypochlorite reacts violently with amines and ammonium salts. Solutions are reactive with common cleaning products such as toilet bowl cleaners, rust removers, vinegar, acids, organics and ammonia products to produce hazardous gases such as chlorine and other chlorinated species.

SECTION 5 POTENTIAL HEALTH EFFECTS AND FIRST AID INFORMATION

GENERAL: May cause immediate pain. Exposure to the skin may cause sensitization or other allergic responses. If the eye is not irrigated immediately after it has been exposed permanent eye damage may occur. Strict adherence to first aid measures following any exposure is essential. SPEED IS ESSENTIAL!

ROUTE(S) OF ENTRY AND POTENTIAL HEALTH EFFECTS	***EMERGENCY & FIRST AIDE PROCEDURES***
INHALATION: Strong irritating to mucous membranes in the nose, throat and respiratory tract. Prolonged contact can cause chronic irritation, pulmonary edema and central nervous system depression. Repeated inhalation exposure may cause impairment of lung function and permanent lung damage.	**If inhaled,** move expose person to fresh air. If person is not breathing, call 911 or an ambulance, then give artificial respiration, preferably mouth-to-mouth if possible. If breathing is difficult, have trained person administer oxygen. Call a poison control center or medical physician for further treatment advice. Have the product label or MSDS with you when calling or going for medical treatment.
SKIN CONTACT: Prolonged and repeated exposure to dilute solutions often causes irritation, redness, pain and drying and cracking of the skin. Human evidence has indicated that an ingredient in this product can cause skin sensitization. Depending upon the concentration and how soon after exposure the skin is washed with water, skin contact may cause burns and tissue destruction.	**If on skin or clothing,** take off all contaminated clothing and rinse skin immediately with plenty of water for 15-20 minutes. If irritation persists, repeat flushing. Do not transport victim unless the recommended irrigation period is completed unless flushing can be continued during transport. Call a poison control center or medical physician for treatment advice. Have the product label or MSDS with you when calling or going for medical treatment.
EYE CONTACT: Strongly irritating to eyes. Exposure to vapor can cause tearing, conjunctivitis and burning of the eyes. Eye contact may cause a corneal injury. The severity of the effects depend on the concentration and how soon after exposure the eyes are washed with water. In severe exposure cases, glaucoma, cataracts and permanent blindness may occur.	**If in eyes,** hold eye open and rinse slowly and gently with plenty of water for 15-20 minutes. Remove contact lenses, if present, after the first 5 minutes, then continue rinsing eye for 10-15 minutes. Do not transport victim until the recommended flushing period is completed unless irrigation can be continued during transport. Call a poison control center or medical physician for further treatment advice. Have the product label and/or MSDS with you when calling or going to medical treatment.
INGESTION: Corrosive. Can cause severe corrosion of and damage to the gastrointestinal tract (including mouth, throat, and esophagus). Exposure is characterized by nausea, vomiting, abdominal pain, diarrhea, bleeding, and/or tissue ulceration.	**If swallowed,** call poison control center or medical physician immediately for treatment advice. Have the product label or MSDS with you when calling or going for medical treatment. Have exposed person sip a glass of water if able to swallow, and dilute immediately by giving milk, melted ice cream, starch paste or antacids such as milk of magnesia. Avoid sodium bicarbonate because of carbon dioxide release. DO NOT INDUCE VOMITING, LAVAGE OR ACIDIC ANTIDOTES unless told to do so by poison control center or medical physician. DO NOT give anything by mouth to an unconscious person. If spontaneous vomiting occurs, have victim lean forward with head down to avoid breathing in of vomitus, rinse mouth and administer more water.

NOTE TO PHYSICIAN(S): Pre-existing medical conditions may be aggravated by exposures affecting target organs. There are no known chronic effects. Probable mucosal damage may contraindicate the use of gastric lavage. In addition to the alkalinity of this product, the continued generation of chlorine gas after ingestion can damage further the stomach mucous, depending on the amount ingested. Consideration may be given to removal of the product from the stomach, taking care to avoid perforation of esophagus or stomach. An ounce of 1% sodium thiosulfate or milk of magnesia is helpful.

SECTION 6 TOXICOLOGICAL DATA

ANIMAL DATA: Inhalation 0.25-hour LC50 - 10.5 mg/L in rats; Acute Dermal LD50 - 10,000 mg/kg in rabbits; Acute Oral LD50 - 8910 mg/kg in rats

SUMMARY: The concentrated solution is corrosive to skin, and a 5% solution is a severe eye irritant. Solutions containing more than 5% available chlorine are classified by DOT corrosive (please see section 10 of this MSDS). Toxicity described in animals from single exposures by ingestion include muscular weakness, and hypoactivity. Repeated ingestion exposure in animals caused an increase in the relative weight of adrenal glands in one study, but no pathological changes were observed in two other studies. Long-term administration of compound in drinking water of rats caused depression of the immune system. No adverse changes were observed in an eight week dermal study of a 1% solution in guinea pigs. Tests in animals demonstrate no carcinogenic activity by either the oral or dermal routes. Tests in bacterial and mammalian cell cultures demonstrate mutagenic activity.

CARCINOGENICITY: None of the components present in this material at concentrations equal to or greater than 0.1% are listed by IARC, NTP, OSHA or ACGIH as carcinogen.

MUTAGENICITY: Sodium Hypochlorite has been shown to produce damage to genetic material when tested in vitro. Studies in vivo have shown no evidence of mutagenic potential for this material. It is judged that the risk of genetic damage is insignificant for sodium hypochlorite because of its biological activity, lack of mutagenicity in vivo, and failure to produce carcinogenic response.

SECTION 7 FIRE AND EXPLOSION HAZARD DATA

Flash Point: This product does not flash	**Flammable Limits (Lower):** Not Applicable	
Flammable Limits (Upper): Not Applicable	**Auto Ignition Temperature:** Not Applicable	
Decomposition Temperature: Not Applicable	**Rate of Burning:** Not Available	
Explosive Power: Not Available	**Sensitivity to Mechanical Impact:** Not expected to be sensitive to mechanical impact	**Sensitivity to Static Discharge:** Not expected to be sensitive to static discharge
Fire and Explosion Hazards: This material is non-flammable but is decomposed by heat and light, causing a pressure build-up which could result in an explosion. When heated, it may release chlorine gas or hydrochloric acid. Vigorous reaction with oxidizable or organic materials may result in fire.	**Extinguishing Media:** Use agents appropriate for surrounding fire. Foam, dry chemical, carbon dioxide, water fog or spray. If leak or spill has not ignited, use water spray to disperse the vapors and to protect persons attempting to stop the leak.	
Fire Fighting Procedures: Water spray should be used to cool containers and may be used to knock down escaping vapor. Remove storage vessels from the fire zone.	**Fire Fighting Protective Equipment:** Full protective clothing, including a NIOSH approved self-contained breathing apparatus, must be worn in a fire involving this material. Toxic gas vapors are produced upon decomposition.	

SECTION 8 ECOLOGICAL INFORMATION

The toxicity and corrosivity of this product is a function of concentration and the concentration's pH.

ECOTOXICOLOGICAL INFORMATION: Toxic to aquatic life. 96-hour LC50: fathead minnows: 0.090-5.9 mg/L, bluegill sunfish: 0.10-2.48 mg/L, shore crab: 1.418 mg/L, grass shrimp: 52.0 mg/L, scud: 0.145-4.0 mg/L, water flea: 2.1 mg/L.

ENVIRONMENTAL EFFECTS: Do not contaminate domestic or irrigation water supplies, lakes, streams, ponds, or rivers. May be an aesthetic nuisance due to color. Mammals and birds, exposed wildlife would be subject to skin irritation and burns due to the corrosive nature of this material.

SECTION 9 DISPOSAL CONSIDERATIONS

Treatment, storage, transportation, and disposal must be in accordance with applicable Federal, State, and Local regulations. Do not burn. Do not flush to surface water or sanitary sewer system. If pH of material is equal to or greater than a 12.5, the material is a RCRA Hazardous Waste D002, corrosive.

SECTION 10 TRANSPORT INFORMATION

U.S. DOT Basic Shipping Description: Hypochlorite Solutions, 8, UN1791, III

U.S. DOT Hazardous Substance: Yes, RQ 100 pounds (Sodium Hypochlorite)

U.S. DOT Marine Pollutant: No

U.S. DOT Required Label: Corrosive (see column 6, 49 CFR §172.101)

U.S. DOT Packaging Exception: Yes, if package meets the criteria of a limited quantity or consumer commodity as defined by 49 CFR §171.8, §173.144 and .154, and §172.312 and .316

N. AMERICAN EMERGENCY GUIDE PAGE NUMBER: 154

Transportation Emergency Phone Numbers: *CHEMTREC 1-800-424-9300*

SECTION 11 PRECAUTIONS FOR SAFE HANDLING AND STORAGE

PRECAUTIONS TO BE TAKEN IN HANDLING AND STORING: Take all precautions to avoid personal contact. Keep container closed except when transferring material. Locate safety shower and eyewash station close to chemical handling area. Use normal good industrial hygiene and housekeeping practices, wash thoroughly after handling. Store in a cool, dry, well-ventilated area, away from incompatibles (minimum distance of 20-25 feet per NFPA Code 1) and direct sunlight. Keep container properly labeled at all times. Vented containers must be used and must be kept closed when not

being used. Long-term storage is impossible without decomposition. Only use containers made from tinted glass, polyethylene & FRP. Keep out of reach of children.

PROCESS HAZARDS: Not Available

STORAGE TEMPERATURE: Store containers below 29°C and above freezing point. Do not expose sealed containers above 40°C. Try to store in the dark at the lowest possible temperature, but keep from freezing, to slow-down decomposition.

SECTION 12 EXPOSURE CONTROLS/PERSONAL PROTECTION

ENGINEERING CONTROLS: Full handling precautions should be taken at all times. Provide good room ventilation plus local exhaust at points of emission and low level floor exhaust in immediate handling area. Where engineering controls are not feasible, use adequate local exhaust ventilation wherever mist, spray or vapor may be generated.

PERSONAL PROTECTIVE EQUIPMENT:

Eye: Use chemical safety goggles when there is potential for contact (splashing), faceshield recommended – ANSI Z87.1

Skin: Gloves and protective clothing (apron, boots, and bodysuits) made from rubber, vinyl, neoprene or PVC. Standard work clothing closed at the neck and wrist while wearing impervious equipment.

Respiratory (*Specify Type*): A NIOSH/MSHA approved air purifying respirator with an acid gas cartridge or canister may be permissible under circumstances where airborne concentrations are expected to exceed exposure limits. Protection provided by air purifying respirators is limited. Use a positive pressure air supplied respirator if there is potential for uncontrolled releases, exposure levels are not known, or other circumstances where air purifying respirators may not provide adequate protection.

Other: Eyewash, shower station (ANSI Z358.1) must be provided within the immediate work area.

SECTION 13 ACCIDENTAL RELEASE MEASURES

Ventilate enclosed area. Collect product for recovery or disposal. For release to land, contain discharge by constructing dikes or applying inert absorbent; for release to water, utilize damming and/or water diversion to reduce the spread of contamination; and, for release to air, vapors may be suppressed by the use of a water fog. All run-off water must be captured for treatment and disposal. Collect contaminated soil and water, and absorbent for disposal. Notify applicable government authority if release is reportable or could adversely affect the environment. Please follow all Local, State and Federal Laws for clean-up and disposal of all contaminated material. **Deactivating Chemicals:** Sodium Sulfite, Sodium Thiosulfate and Sodium Bisulfite.

SECTION 14 REGULATORY INFORMATION

OSHA CLASSIFICATION, 29 CFR §1900-1910:

Physical Hazards: Reactivity **Health Hazards**: Acute - Skin Sensitizer, Corrosive

CERCLA AND SARA REGULATIONS, 40 CFR §300-373:

Reportable Quantity = 100 lb. **CERCLA Hazardous Material:** Yes

Title III Hazard Classifications: Acute - yes, Chronic - no, Fire - yes, Reactivity - yes & Sudden Release of Pressure - No. This product may be reportable under the requirements of 40 CFR §370.

SARA Extremely Hazardous Substance: No **SARA Toxic Chemical:** No **CA Prop 65:** No

FDA 21 CFR 178.1010: Yes, Approved as Sanitizer

NSF Whitebook (former USDA Approval) Listing: Aqua Guard Chlorinating Sanitizer 10.5% - 3D, B1, B2, D1, D2, G4, G7, GX, Q4, **Aqua Guard Bleach 12.5% -** 3D, B1, B2, D1, D2, G4, GX, Q4

EPA "CLEAN AIR ACT": This product does not contain nor is it manufactured with ozone depleting substances. It is not defined as a Hazardous Air Pollutant per 40 CFR 112.

EPA Pesticide: The 10.5% and 12.5% sodium hypochlorite products are registered with the U.S. EPA as a pesticide, as required under the Federal Insecticide, Fungicide and Rodenticide Act (FIFRA). It is a violation of Federal law to use this product for pesticidal applications in a manner inconsistent with the FIFRA labeling.

NPCA-HMIS RATING: HEALTH: 3 FLAMMABILITY: 0 REACTIVITY: 2

NFPA RATING:NONE AT THIS TIME

SECTION 15 REFERENCES

Suppliers' Material Safety Data Sheets and EPA Labeling Requirements
Olin and OxyChem Sodium Hypochlorite Handbook
Chlorine Institute Sodium Hypochlorite Pamphlet #96
Chlorine Institute Product Stewardship Bulletins for Sodium Hypochlorite

This information contained herein, while not guaranteed, is offered only as a guide to the handling of this specific material and has been prepared in good faith by product knowledgeable personnel. This information is not intended to be all-inclusive as to the manner and conditions of use, handling and storage. Other factors may involve other or additional safety or performance considerations. Though Allied Universal Corporation is happy to respond to questions regarding safe handling of Allied's products, safe handling and use remains the responsibility of the product's consumers and/or customers. No warranty of merchantability or fitness for purpose, or any other kind, express or implied, is made regarding performance, stability or otherwise. Allied Universal Corp. will not be liable for any damages, losses, injuries or consequential damages that may result from the use of or reliance on any information contained herein. No suggestions for use are intended as, and nothing herein shall be construed as a recommendation to infringe any existing patents or violate any federal, state or local laws, rules, regulations or ordinances.

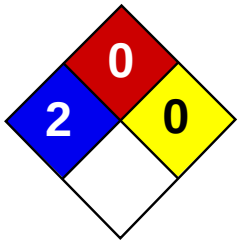

Health	2
Fire	0
Reactivity	0
Personal Protection	E

Material Safety Data Sheet
Potassium metabisulfite MSDS

Section 1: Chemical Product and Company Identification

Product Name: Potassium metabisulfite

Catalog Codes: SLP3214, SLP5026, SLP2203

CAS#: 16731-55-8

RTECS: TT4920000

TSCA: TSCA 8(b) inventory: Potassium metabisulfite

CI#: Not available.

Synonym: Dipotassium pyrosulfite; Dipotassium disulfite; Dipotassium metabisulfite; Potassium disulfite; Pyrosulfurous acid, dipotassium salt

Chemical Name: Potassium Pyrosulfite

Chemical Formula: K2-S2-O5

Contact Information:

Sciencelab.com, Inc.
14025 Smith Rd.
Houston, Texas 77396

US Sales: **1-800-901-7247**
International Sales: **1-281-441-4400**

Order Online: ScienceLab.com

CHEMTREC (24HR Emergency Telephone), call: 1-800-424-9300

International CHEMTREC, call: 1-703-527-3887

For non-emergency assistance, call: 1-281-441-4400

Section 2: Composition and Information on Ingredients

Composition:

Name	CAS #	% by Weight
Potassium metabisulfite	16731-55-8	100

Toxicological Data on Ingredients: Potassium metabisulfite LD50: Not available. LC50: Not available.

Section 3: Hazards Identification

Potential Acute Health Effects:
Hazardous in case of skin contact (irritant), of eye contact (irritant), of inhalation (lung irritant). Slightly hazardous in case of ingestion.

Potential Chronic Health Effects:
CARCINOGENIC EFFECTS: 3 (Not classifiable for human.) by IARC. MUTAGENIC EFFECTS: Not available. TERATOGENIC EFFECTS: Not available. DEVELOPMENTAL TOXICITY: Not available. Repeated or prolonged exposure is not known to aggravate medical condition.

Section 4: First Aid Measures

Eye Contact:

Check for and remove any contact lenses. In case of contact, immediately flush eyes with plenty of water for at least 15 minutes. Cold water may be used. Get medical attention.

Skin Contact:
In case of contact, immediately flush skin with plenty of water. Cover the irritated skin with an emollient. Remove contaminated clothing and shoes. Cold water may be used.Wash clothing before reuse. Thoroughly clean shoes before reuse. Get medical attention.

Serious Skin Contact:
Wash with a disinfectant soap and cover the contaminated skin with an anti-bacterial cream. Seek medical attention.

Inhalation:
If inhaled, remove to fresh air. If not breathing, give artificial respiration. If breathing is difficult, give oxygen. Get medical attention.

Serious Inhalation: Not available.

Ingestion:
Do NOT induce vomiting unless directed to do so by medical personnel. Never give anything by mouth to an unconscious person. If large quantities of this material are swallowed, call a physician immediately. Loosen tight clothing such as a collar, tie, belt or waistband.

Serious Ingestion: Not available.

Section 5: Fire and Explosion Data

Flammability of the Product: Non-flammable.

Auto-Ignition Temperature: Not applicable.

Flash Points: Not applicable.

Flammable Limits: Not applicable.

Products of Combustion: Not available.

Fire Hazards in Presence of Various Substances: Not applicable.

Explosion Hazards in Presence of Various Substances:
Risks of explosion of the product in presence of mechanical impact: Not available. Risks of explosion of the product in presence of static discharge: Not available.

Fire Fighting Media and Instructions: Not applicable.

Special Remarks on Fire Hazards:
When heated to decomposition it emits toxic fumes of sulfur oxides and potassium sulfate. It may ignite during milling or grinding (when powdering it).

Special Remarks on Explosion Hazards: Not available.

Section 6: Accidental Release Measures

Small Spill:
Use appropriate tools to put the spilled solid in a convenient waste disposal container. Finish cleaning by spreading water on the contaminated surface and dispose of according to local and regional authority requirements.

Large Spill:
Use a shovel to put the material into a convenient waste disposal container. Finish cleaning by spreading water on the contaminated surface and allow to evacuate through the sanitary system.

Section 7: Handling and Storage

Precautions:
Do not breathe dust. Wear suitable protective clothing. In case of insufficient ventilation, wear suitable respiratory equipment. If you feel unwell, seek medical attention and show the label when possible. Avoid contact with skin and eyes. Keep away from incompatibles such as oxidizing agents, acids.

Storage: Keep container tightly closed. Keep container in a cool, well-ventilated area.

Section 8: Exposure Controls/Personal Protection

Engineering Controls:
Use process enclosures, local exhaust ventilation, or other engineering controls to keep airborne levels below recommended exposure limits. If user operations generate dust, fume or mist, use ventilation to keep exposure to airborne contaminants below the exposure limit.

Personal Protection:
Splash goggles. Lab coat. Dust respirator. Be sure to use an approved/certified respirator or equivalent. Gloves.

Personal Protection in Case of a Large Spill:
Splash goggles. Full suit. Dust respirator. Boots. Gloves. A self contained breathing apparatus should be used to avoid inhalation of the product. Suggested protective clothing might not be sufficient; consult a specialist BEFORE handling this product.

Exposure Limits: Not available.

Section 9: Physical and Chemical Properties

Physical state and appearance: Solid. (Crystalline powder. Crystals solid.)

Odor: Sulfurous. Sulffur dioxide odor

Taste: Not available.

Molecular Weight: 222.31 g/mole

Color: White.

pH (1% soln/water): Not available.

Boiling Point: Not available.

Melting Point: Decomposition temperature: 150°C (302°F)

Critical Temperature: Not available.

Specific Gravity: Density: 2.34 (Water = 1)

Vapor Pressure: Not applicable.

Vapor Density: 2.3 (Air = 1)

Volatility: Not available.

Odor Threshold: Not available.

Water/Oil Dist. Coeff.: Not available.

Ionicity (in Water): Not available.

Dispersion Properties: See solubility in water.

Solubility:
Easily soluble in cold water, hot water. Soluble in acids and alkaline. Insoluble in alcohol

Section 10: Stability and Reactivity Data

Stability: The product is stable.

Instability Temperature: Not available.

Conditions of Instability: Incompatible materials, moisture, air

Incompatibility with various substances: Reactive with oxidizing agents, acids.

Corrosivity: Non-corrosive in presence of glass.

Special Remarks on Reactivity:
Liberates sulfur dioxide in contact with acids. Air sensitive. Moisture sensitive. It oxidizes to in air to sulfate, more readily in presence of moisture.

Special Remarks on Corrosivity: Not available.

Polymerization: Will not occur.

Section 11: Toxicological Information

Routes of Entry: Inhalation. Ingestion.

Toxicity to Animals:
LD50: Not available. LC50: Not available.

Chronic Effects on Humans: CARCINOGENIC EFFECTS: 3 (Not classifiable for human.) by IARC.

Other Toxic Effects on Humans:
Hazardous in case of skin contact (irritant), of inhalation (lung irritant). Slightly hazardous in case of ingestion.

Special Remarks on Toxicity to Animals: Not available.

Special Remarks on Chronic Effects on Humans:
May cause adverse reproductive effects based on animal test data. May affect genetic material (mutagenic)

Special Remarks on other Toxic Effects on Humans:
Acute Potential Health Effects: Skin: May cause skin irritation. Eyes: May cause eye irritation. Inhalation: May cause respiratory tract irritation. May cause asthmatic attacks due to allergic sensitization of the respiratory tract. Ingestion: May cause gastrointestinal tract irritation with abdominal pain, nausea, vomiting and diarrhea. May cause allergic/hypersensitivity/ anaphylactoid reaction. Some asthmatics are said to be sensitive to minute amounts of sulfites in foods. It may cause a worsening of asthma in asthmatics. Individuals sensitive to sulfides may experience stomach upset , tightness in the chest, or wheezing. Extremely large concentrations may produce central nervous system, seizures, hypotension, tachycardia, and cardiovascular collapse.

Section 12: Ecological Information

Ecotoxicity: Not available.

BOD5 and COD: Not available.

Products of Biodegradation:
Possibly hazardous short term degradation products are not likely. However, long term degradation products may arise.

Toxicity of the Products of Biodegradation: The product itself and its products of degradation are not toxic.

Special Remarks on the Products of Biodegradation: Not available.

Section 13: Disposal Considerations

Waste Disposal:

Waste must be disposed of in accordance with federal, state and local environmental control regulations.

Section 14: Transport Information

DOT Classification: Not a DOT controlled material (United States).

Identification: Not applicable.

Special Provisions for Transport: Not applicable.

Section 15: Other Regulatory Information

Federal and State Regulations: TSCA 8(b) inventory: Potassium metabisulfite

Other Regulations: EINECS: This product is on the European Inventory of Existing Commercial Chemical Substances.

Other Classifications:

WHMIS (Canada): Not yet classified under WHMIS (Canada)

DSCL (EEC):
R31- Contact with acids liberates toxic gas. R36/37/38- Irritating to eyes, respiratory system and skin. S26- In case of contact with eyes, rinse immediately with plenty of water and seek medical advice. S36- Wear suitable protective clothing.

HMIS (U.S.A.):

Health Hazard: 2

Fire Hazard: 0

Reactivity: 0

Personal Protection: E

National Fire Protection Association (U.S.A.):

Health: 2

Flammability: 0

Reactivity: 0

Specific hazard:

Protective Equipment:
Gloves. Lab coat. Dust respirator. Be sure to use an approved/certified respirator or equivalent. Splash goggles.

Section 16: Other Information

References: Not available.

Other Special Considerations: Not available.

Created: 10/11/2005 12:21 PM

Last Updated: 05/21/2013 12:00 PM

The information above is believed to be accurate and represents the best information currently available to us. However, we make no warranty of merchantability or any other warranty, express or implied, with respect to such information, and we assume no liability resulting from its use. Users should make their own investigations to determine the suitability of the information for their particular purposes. In no event shall ScienceLab.com be liable for any claims, losses, or damages of any third party or for lost profits or any special, indirect, incidental, consequential or exemplary damages, howsoever arising, even if ScienceLab.com has been advised of the possibility of such damages.

ALCONOX

Critical-cleaning detergents for laboratory, healthcare and industrial applications

30 Glenn Street
White Plains NY 10603 USA
Tel.914.948.4040
Fax.914.948.4088

24 Hour Emergency Number (CHEM-TEL) (800) 255-3924 in U.S.

(e-mail) cleaning@alconox.com

(URL) http://www.alconox.com
- **distributors**
- **technical information**
- **free samples**
- **new developments**

Alconox ®

Powdered Precision Cleaner

- Concentrated to save you money
- Biodegradable and readily disposable
- Penetrating wetting power to save you time
- Replaces corrosive acids and hazardous solvents
- Free rinsing to give you reliable results and no interfering residues
- Use to pass your cleaning validation tests for lab accreditation and plant inspection approval

Used to clean: Healthcare instruments, laboratory ware, vacuum equipment, tissue culture ware, personal protective equipment, sampling apparatus, catheters, tubing, pipes, radioactive contaminated articles, optical parts, electronic components, pharmaceutical apparatus, cosmetics manufacturing equipment, metal castings, forgings and stampings, industrial parts, tanks and reactors. Authorized by USDAfor use in federally inspected meat and poultry plants. Passes inhibitory residue test for water analysis. FDAcertified.

Used to remove: Soil, grit, grime, buffing compound, slime, grease, oils, blood, tissue, salts, deposits, particulates, solvents, chemicals, radioisotopes, radioactive contaminations, silicon oils, mold release agents.

Surfaces cleaned: Corrosion inhibited formulation recommended for glass, metal, stainless steel, porcelain, ceramic, plastic, rubber and fiberglass. Can be used on soft metals such as copper, aluminum, zinc and magnesium if rinsed promptly. Corrosion testing may be advisable.

Cleaning method: Soak, brush, sponge, cloth, ultrasonic, flow through clean-in-place. Will foam—not for spray or machine use.

Directions: Make a fresh 1% solution (2 1/2 Tbsp. per gal., 1 1/4 oz. per gal. or 10 grams per liter) in cold, warm, or hot water. If available use warm water. Use cold water for blood stains. For difficult soils, raise water temperature and use more detergent. Clean by soak, circulate, wipe, or ultrasonic method. Not for spray machines, will foam. For nonabrasive scouring, make paste. Use 2% solution to soak frozen stopcocks. To remove silver tarnish, soak in 1% solution in aluminum container. RINSE THOROUGHLY—preferably with running water. For critical cleaning, do final or all rinsing in distilled, deionized, or purified water. For food contact surfaces, rinse with potable water. Used on a wide range of glass, ceramic, plastic, and metal surfaces. Corrosion testing may be advisable.

Convenient Sizes:	**Alconox Cat. #**
Case 9 x 4 lb. Boxes	**1104**
25 lb. Carton	**1125**
50 lb. Carton	**1150**
100 lb. Drum	**1101**
300 lb. Drum	**1103**
Case 12 Box 50 x 1/2 oz.	**1112**
1 lb. makes 13 gal. cleaning solution	

Alconox is available from leading laboratory, hospital, clinical and industrial suppliers. To find a distributor for Alconox, Inc. detergents, visit “Find Dealer” at the website. To request FREE samples visit our Sample Request at www.alcnox.com, write or call Alconox, Inc. today.

ALCONOX

Critical-cleaning detergents for laboratory, healthcare and industrial applications

30 Glenn Street
White Plains NY 10603 USA
Tel.914.948.4040
Fax.914.948.4088

24 Hour Emergency Number (CHEM-TEL) (800) 255-3924 in U.S.

(e-mail) cleaning@alconox.com

(URL) http://www.alconox.com
- **distributors**
- **technical information**
- **free samples**
- **new developments**

PHYSICAL DATA	TYPICAL VALUE
pH of 1% solution	9.5
Flash Point (degrees F)None	
Phosphate Content (as Phosphorus)7.3%	
Organic Carbon (% calculated w/w)11%	
Fragrance Content	0%
Surface Tension 1% Sol'n (Dyne/cm)	32
Percent active ingredients	100%

Color: White and cream colored flakes
Form: Powder
Solubility in Water: To 10% (w/w) at ambient temperature
Hard WaterEffectiveness: Highly Effective
Biodegradability: Biodegradable
Foam Tendency: High Foaming
Shelf Life: Two years from the date of manufacture

Chemical Description

Alconox consists primarily of a homogeneous blend of sodium linear alkylaryl sulfonate, alcohol sulfate, phosphates, carbonates. Alconox is anionic in nature.

Cleaning Validation Methods:

Test a parameter of rinse water before and after rinsing the cleaned surface. No significant change in the parameter indicates no detectable residue. Parameters measured include: pH, conductivity, UV, TOC, HPLC, sodium concentration, phosphorus concentration, anionic surfactant concentration using inexpensive detergent water testing kits, surface tension, and surface analysis. Pharmaceutical Cleaning Validation references are available in the tech info section of www.alconox.com.

Health Safety Information:

OSHAHazardous Ingredients: None
RCRAHazard Class: Non-hazardous
Flammability: Non-flammable
Latex Content: None in detergent, packaging materials or adhesives.
Oral Toxicity: LD_{50} > 5000 mg/kg oral rat
No ingredient defined as an oral toxicant by OSHA
Eye Irritation: Mild to Moderate eye irritant if not rinsed
Inhalation Toxicity: Non-irritating solution, powder a potential irritant
VOC Content: 0%
Carcinogenicity:
NTP = No **IARC** = No **OSHA** = No
All ingredients in Alconox are listed in TSCAinventory.USDANSF cat A1

Precautions:

No special precautions other than good industrial hygiene and safety practices employed with any industrial chemical (see Directions). AMaterial Safety Data Sheet is available at www.alconox.com or by calling fax-on-demand at 914-948-4040 and following the prompts. Use fax document # 0311.

Contact Alconox, Inc. for purchase specifications. Typical data is not a specification.

While the information in this report should not be considered to be a product warranty, we urge you to investigate, test and verify the suitability of Alconox detergents for your specific application. We, of course, can not give permission to use, or recommend the use of, our detergents where they infringe patents. No representation or warranty is made as to the safety of products or materials mentioned under the Federal Food Additives Amendment of 1958.

MS 02.10.01.00.06.1©2006 Alconox, Inc.

APPENDIX C

Standard Operating Procedures

STANDARD OPERATING PROCEDURE

GROUNDWATER LEVEL MEASUREMENT, ACOUSTIC METER

1. Scope and Application

This is a technical procedure for measuring groundwater levels with an acoustic water level meter. This method is applicable where downhole equipment such as pumps, pump cables, and discharge lines are present in the well, and the well is not equipped with a sounding tube. This method is also appropriate where the depth to water in a well is greater than the length of readily available electronic water level meters.

To use this method, the well must be fitted with an access port at least 5/8 inches in diameter in an accessible location. If torque arrestors, wire shields, or other equipment are present that cover more than half the area of the casing, erroneous readings may result.

In monitoring wells without downhole equipment, use of an electronic water level meter is recommended.

2. Equipment

2.1 Acoustic water level meter

2.2 Optional cap for water level meter for open casings

2.3 Wrench or other tools to open access port

2.4 Disposable nitrile gloves

2.5 Detergent/water mix in a spray bottle, distilled water in a spray bottle, and disposable paper towels

3. Procedure

3.1 Review the Job Safety Analysis for this task.

3.2 Inspect and Open Access Port on the Well Head

- Don disposable gloves
- Inspect well completion (including sanitary seal) and note condition on field form
- Remove fluid and debris before opening the access port
- Note damage or debris/ fluid on field form

3.3 Collect Depth to Groundwater Measurement

- Depending on the meter, turn it on and set the temperature to match the approximate air temperature in the well casing. Refer to maps and tables supplied in the meter manual.
- Insert the measuring duct (sound wave guide) of the meter into the access port, so that the duct extends through the seal.
- Momentarily press power button and record the reading.
- In an uncased well, add the cap to the measuring duct to close off the open top of the casing.

3.4 Close Access Port

- Replace the cap on the access port and verify it is secure.

3.5 Decontaminate Meter

- Spray the probe and the section of tape that was submerged with the detergent/water mix, and rinse using the spray bottle with water.
- Use paper towels along with detergent/water mix to remove LPH or grease if present, and rinse.

4. References

AME. 2013. JSA Groundwater Level Measurements

U.S. Geological Survey. 2006. *Collection of water samples (ver. 2.0): U.S. Geological Survey Techniques of Water-Resources Investigations, book 9, chap. A4*, September 2006, accessed January 16, 2014, at http://pubs.water.usgs.gov/twri9A4/

STANDARD OPERATING PROCEDURE

GROUNDWATER LEVEL AND APPARENT LIQUID PHASE HYDROCARBON THICKNESS MEASUREMENT

1. Scope and Application

This is a technical procedure for measuring groundwater levels and apparent liquid phase hydrocarbons (LPH) thickness. For sites where LPH may be present, the static water level and apparent LPH thickness in each well will be measured with an electronic interface probe prior to purging or sampling.

Where downhole equipment such as pumps, pump cables, and discharge lines are present in the well, and the well is not equipped with a sounding tube, use of an acoustic water level meter is strongly recommended (see separate SOP). Also, if level meter with a tape is used in a water-supply well, additional equipment disinfection procedures are required.

2. Equipment

2.1 Conductance probe level meter with tape marked on 0.01 foot increments

2.2 Electronic interface meter (where LPH may be present) with tape marked on 0.01 foot increments

2.3 Socket wrenches or other tools to access well

2.4 Pry bar for well lid

2.5 Key to unlock the padlock on the well head

2.6 Disposable neoprene gloves

2.7 Detergent/water mix in a spray bottle, distilled water in a spray bottle, and disposable paper towels

2.8 Disposable clear plastic bailer (where LPH may be present) and cord

3. Procedure

3.1 Review the Job Safety Analysis for this task.

3.2 Inspect and Clean up Well Head

- Don disposable gloves
- Inspect well completion (including well box lid and bolts for traffic boxes) and note condition on field form
- Open well box lid

- Inspect well box for damage and presence of debris and fluid
- Remove fluid and debris before unlocking and removing well cap
- Note damage or debris/ fluid on field form

3.2 Collect Depth to Groundwater and LPH Measurements

- Turn on the meter and check the meter for proper functioning by pressing the test button.
- Locate the reference point on the casing, which may be marked with a notch. If no reference point is visible, measure from the north side of the casing.
- Slowly lower the tape of the interface probe until a tone is emitted. Prevent the probe tip from contacted the ground or the interior of the well box.
- If the first encountered substance is LPH, lower the tape until the tone corresponding to water is emitted.
- At this point, the mark on the tape opposite the permanent reference point on the top of the well casing will be read to the nearest 0.01 foot.
- Repeat the measurement by slowly raising and lowering the tape. Measurements should agree within 0.01 to 0.02 foot. If not repeat a third time.
- Record the reading to the nearest 0.01 foot as depth to water.
- Slowly raise the tape until the tone for LPH ceases, which is the top of the LPH.
- Repeat the measurement by slowly raising and lowering the tape. Measurements should agree within 0.01 to 0.02 foot. If not repeat a third time.
- Record this reading to the nearest 0.01 foot as depth to LPH.

3.3 Collect LPH Sample (if applicable)

- Gently lower the bailer approximately one-half the bailer length past the air/LPH interface.
- Retrieve the bailer.
- Note the appearance (color, opacity, "freshness") of the LPH on field notes.

3.4 Collect Depth to Groundwater Measurement

- Locate the reference point on the casing, which may be marked with a notch. If no reference point is visible, measure from the north side of the casing.
- Slowly lower the tape of the conductance probe until a tone is emitted (typically a steady tone).

- At this point, the mark on the tape opposite the permanent reference point on the top of the well casing will be read to the nearest 0.01 foot.
- Repeat the measurement by slowly raising and lowering the tape. Measurements should agree within 0.01 to 0.02 foot. If not repeat a third time.
- Record this reading to the nearest 0.01 foot as depth to water.

3.5 Close Well Head

- Replace well cap securely and replace lock.
- Replace well box and verify that bolts are secure.

3.6 Decontaminate Meter

- Spray the probe and the section of tape that was submerged with the detergent/water mix, and rinse using the spray bottle with water.
- Use paper towels along with detergent/water mix to remove LPH or grease if present, and rinse.

4. References

AME. 2013. JSA Groundwater Level Measurements

ASTM. 2007. Standard Test Method for Determining Subsurface Liquid Levels in a Borehole or Monitoring Well (Observation Well). D 4750.

U.S. Geological Survey. 2006. *Collection of water samples (ver. 2.0): U.S. Geological Survey Techniques of Water-Resources Investigations, book 9, chap. A4*, September 2006, accessed January 16, 2014, at http://pubs.water.usgs.gov/twri9A4/

STANDARD OPERATING PROCEDURE

DISINFECTION OF WATER-SUPPLY WELL HEAD

1. Scope and Application

This is a procedure for disinfecting water-supply well heads (e.g. sanitary well caps, sanitary well seals equipped with access ports) and associated hand tools used to open the well head prior to performing work inside the casing. Work inside the casing may include visual inspection of the well casing from an opened well head, downhole video surveys, or removing or replacing pumps. The objective of this procedure is to prevent the introduction of microorganisms into the well casing.

Any equipment introduced into the well casing must also be disinfected. Those procedures are provided in a separate Standard Operating Procedure (SOP).

For groundwater level measurements in a water-supply well, use of an acoustic water level meter is recommended to limit the introduction of items into the well casing (see separate SOP). If a level meter with a tape is used in a water-supply well, equipment disinfection is required.

2. Equipment

2.1 Clean distilled water, conveyed in a 5-gallon container if treated distilled water is not available on site

2.2 Non-phosphate detergent (e.g. Alconox™ Liquinox™)

2.3 Sodium hypochlorite solution, non-scented household bleach. Most household bleach is 5 to 7 % sodium hypochlorite (50,000 to 70,000 ppm). Use bleach that has not been opened more than 60 days.

2.4 Stiff bristle brush or whisk broom

2.5 Bucket and brush for detergent solution wash

2.6 Garden pump sprayer, minimum 2 gallon, or bucket and brush for rinse

2.7 Spray bottle for bleach solution: hand sprayer generally adequate for well heads less than approximately 1 foot diameter, otherwise garden pump sprayer recommended

2.8 Disposable neoprene gloves

2.9 Clean rags and/or paper towels

2.10 New plastic bag or dedicated container for disinfected tools

2.11 New 6-by-6-foot plastic sheeting to use as drop cloth around well head base

3. Procedure

3.1 Review the Job Safety Analysis for this task.

3.2 Prepare Cleaning Solutions in Advance

- Don disposable gloves
- Mix the liquid detergent with clean distilled water
- Prepare a fresh 1% bleach solution for use on the well head. Add 1 part bleach to 4 parts distilled water if using 5% household bleach, or add 1 part bleach to 6 parts distilled water if using 7% household bleach.
- Prepare a fresh 50 ppm (0.05 %) bleach solution for decontamination of tools in advance (optional). Add 1 milliliter (mL) of bleach for each 1 liter of distilled water. (The 50 ppm bleach solution is optional for the tool contamination; it is less caustic but requires 30-minute contact time.)

3.2 Disinfect Tools

- Don disposable gloves.
- Remove visible dirt and grease with a clean rag or paper towels.
- Wash the tools in the detergent solution using a brush. Also wash the dedicated tool container if it is re-used.
- Rinse the tools (and tool container if re-used) in distilled water.
- Spray the tools (and tool container if re-used) with the bleach solution. If the 50 ppm bleach solution is used, maintain contact for 30 minutes.

3.3 Disinfect the Well Head

- Don disposable gloves
- Install 6-by-6-foot plastic sheeting over well head and onto ground around base of well as a drop cloth to contain dirt, debris, and overspray of cleaning solutions while cleaning and disinfecting and to provide dust protection around well head.
- Remove visible dirt and debris from the well head with the bristle brush or whisk broom. Remove visible grease with a clean rag or paper towels.
- Don new disposable gloves
- Wash the well head with the detergent solution using a brush.
- Rinse the well head with distilled water by swabbing with a brush or using a sprayer.

- Spray the well head with the 1% bleach solution. Avoid overspray on nearby landscaping plants.

4. References

ASTM. 2002. Standard Practices for Decontamination of Field Equipment Used at Waste Sites. D 5088.

Myers, Donna N. et al.., 2014, *Fecal Indicator Bacteria: U.S. Geological Survey Techniques of Water-Resources Investigations,* book 9, chap. A7, section 7.1, May 2014, Version 2.1, accessed May 28, 2014, at http://water.usgs.gov/owq/FieldManual/Chapter7/7.1.html

APPENDIX D

Equipment Blank Analyte List

APPENDIX D

EQUIPMENT BLANK ANALYTE LIST

Group	Analysis	Method
General chemistry	Oil and grease, petroleum (non-polar)	EPA1664A
Microorganisms	E. Coli	SM 9223B
Microorganisms	Total coliform	SM 9223B
Microorganisms	Iron reducing bacteria	BART™ Bioreactor
Microorganisms	Sulfate reducing bacteria	BART™ Bioreactor
Semivolatile organics	Acrylamide	SW846 8316
Semivolatile organics	Diesel range organics, with and without SGCU	SW846 8015D
Semivolatile organics	Nitrogen- and phosporus-containing pesticides	EPA 507
Semivolatile organics	Organochlorine pesticides	EPA 8081
Semivolatile organics	Organophosphorus compounds	EPA 8141B
Semivolatile organics	Semivolatile organic compounds	SW846 8270C
Volatile organics	Gasoline range organics	SW846 8015D
Volatile organics	Volatile organic acids: acetate, butyrate, lactate, propionate, pyruvate	HPLC Microbac 830-MBA
Volatile organics	Volatile organic compounds	SW846 8260B w/ 5035 prep

APPENDIX C

QAPP

QUALITY ASSURANCE PROJECT PLAN

PREPARED FOR

2014 Groundwater Investigation
Fremont County, Pavillion, Wyoming
Wyoming Department of Environmental Quality
122 West 25th Street, 4 West
Cheyenne, Wyoming 82002

PREPARED BY

Acton • Mickelson • Environmental, Inc.
1107 Investment Boulevard, Suite 290
El Dorado Hills, California 95762
(916) 939-7550

AME Project Number 90081.01s

PREPARER

Jeffrey R. Heglie, R.G., C.E.G.
Project Hydrogeologist

Date 6/6/2014

REVIEWER

Barbara J. Mickelson, P.E.
Wyoming Professional Engineer #3866

Date 6/6/2014

Michael A. Acton
Principal/Project Manager

Date 6/6/2014

JUNE 6, 2014

TABLE OF CONTENTS

1. INTRODUCTION 1

2. PROJECT ORGANIZATION 1

3. DATA QUALITY OBJECTIVES 1

4. FIELD AND LABORATORY QUALITY CONTROL REQUIREMENTS.....2
   4.1 Field Measurements 2
   4.2 Samples Submitted for Laboratory Analysis 2

5. DATA ASSESSMENT AND MANAGEMENT 2
   5.1 Project Database.....2
   5.2 Field Data.....3
   5.3 Laboratory Data 3

6. DATA REVIEW AND VALIDATION 3
   6.1 Performance and System Audits.....3
   6.2 Third-Party Validation of Laboratory Analytical Data.....3
   6.3 Corrective Actions 3
   6.4 Quality Assurance Reporting.....4

7. REMARKS 4

8. REFERENCES 4

Appendices

A Curtis & Tompkins, Ltd. Laboratory Quality Assurance Manual
B Isotech Laboratories, Inc. Quality Assurance Plan
C Precision Analytical Quality Control Requirements for Microbiological Analysis
D Field Instrument Operation, Maintenance, and Calibration

Tables

1 Data Quality Objectives
2 Field Quality Control Elements

Figures

1 Project Organizational Chart

1. INTRODUCTION

This Quality Assurance Project Plan (QAPP) describes the quality assurance/quality control (QA/QC) procedures to be followed by Acton • Mickelson • Environmental, Inc. team during collection of groundwater samples.

2. PROJECT ORGANIZATION

Experienced staff will oversee and review all procedures related to data collection and analysis. A project organizational chart is included as **Figure 1**. The project is organized as follows:

Project Manager is responsible for project-related scope, cost, and technical considerations; staff and project coordination; and implementation of overall project QA/QC.

Project Hydrogeologist/Sampling Team Leader is responsible for technical design of the groundwater sampling program and execution of field sampling and QC procedures.

Site Health and Safety Officer is responsible for developing, implementing, and updating the site health and safety plan to be consistent with foreseeable conditions that may be encountered during field operations.

Project QA Officer is responsible for reviewing the project QA program as it relates to collection and completeness of field and laboratory data, including data validation.

3. DATA QUALITY OBJECTIVES

Project data quality objectives (DQOs) are summarized in **Table 1**. DQOs are quantitative and qualitative statements specifying the quality of environmental data required to support the decision-making process. DQOs define acceptable data uncertainty for each activity during sampling events, including both sampling error and analytical instrument error. In order to achieve these objectives, specific criteria for data precision, accuracy, representativeness, comparability, and completeness (PARCC) are specified. Definitions for PARCC parameters are provided in guidance documents, including United States Environmental Protection Agency (EPA) 1987.

Results of laboratory analyses for aqueous samples will be reported to the method detection limit. Comparability of the results will be achieved by using laboratories certified by the American Association for Laboratory Accreditation or the National Environmental Laboratory Accreditation Program. Laboratory QA/QC policies, practices, and procedures are provided in Appendices A through C.

4. FIELD AND LABORATORY QUALITY CONTROL REQUIREMENTS

Field QC elements are listed in **Table 2**.

4.1 Field Measurements

An acceptable level of comparability will be accomplished through consistent use of accepted sampling and measurement methods as described in the AME *Sampling and Analysis Plan* (SAP). Notes on daily calibration procedures are provided in Table 2 of the SAP. Manuals for field instrument operation, maintenance, and calibration are provided in Appendix D.

4.2 Samples Submitted for Laboratory Analysis

PARCC parameters will be monitored through submission and analysis of field and laboratory QC samples, which will include field blanks, trip blanks, laboratory method blanks, field and laboratory duplicates or replicates, matrix spikes, matrix spike duplicates, laboratory control samples, and calibration and check standards.

The type and frequency of field QC samples to be prepared and submitted to the laboratory are provided in **Table 2**. Locations planned for collection of field QC samples are listed in Table 2 of the SAP. Laboratory QA/QC procedures are provided in Appendices A through C.

5. DATA ASSESSMENT AND MANAGEMENT

Data generated during the field investigation will be evaluated for completeness; that is, the amount of data meeting project QA/QC goals. If data generated during field operations or laboratory analysis appear to deviate significantly from observed trends, the Project Manager and/or Project QA Officer will review field or laboratory procedures with appropriate personnel to evaluate the cause of such deviations.

5.1 Project Database

Field and laboratory analytical data will be maintained in an electronic relational database and, when feasible, data will be received as electronic data deliverables (EDDs) to be uploaded directly to the database. Upon delivery to the office, field data will be entered into the project database to expedite validation and interpretation.

The relational database will feature a normalized data structure to exclude redundant values, and will include lookup tables to enforce the use of standard valid values for common parameters such as units and chemical names. The electronic database software for the project will be EQuIS Professional by EarthSoft, Inc. of Concord, Massachusetts.

5.2 Field Data

Field personnel are responsible for monitoring field data collection and reporting. Field personnel will review field measurements at the time of measurement and re-measure parameters, as necessary.

5.3 Laboratory Data

Laboratory data will be supplied as written reports and as EDDs, and will include summary QA/QC information. The laboratory will also supply complete data packages for use in third-party data validation.

6. DATA REVIEW AND VALIDATION

6.1 Performance and System Audits

The Project QA Officer or Project Manager will audit field and analytical activities throughout the project, including:

- Observing field activities to check that procedures are performed in accordance with project protocols and standard accepted methods.
- Reviewing daily field records, sampling documentation, and other data-collection sheets during and after field measurements
- Reviewing laboratory analytical data

6.2 Third-Party Validation of Laboratory Analytical Data

Veridian Environmental, Inc. of Davis, California will perform Level IV Validation of laboratory analytical data. Data packages will be validated to ensure compliance with specified analytical QA, data-reduction procedures, data reporting requirements, and required accuracy, precision, and completeness criteria. Validation work will be in accordance with EPA Contract Laboratory Program National Functional Guidelines for data review (EPA 2002a and EPA 2005). Validation results will be provided in a Quality Assurance Report for each sample deliverable group.

6.3 Corrective Actions

Corrective actions will be initiated if DQOs are not achieved. The initial step in corrective action will be to instruct the analytical laboratory to examine its procedures to assess whether analytical or computational errors caused the anomalous results. At the same time, sample collection and handling procedures will be reviewed to assess whether they could have contributed to the anomalous results. Based on this evaluation, the Project Manager and Project QA Officer will assess whether re-analysis or re-sampling is required or whether any protocol should be modified for future sampling events.

6.4 Quality Assurance Reporting

The Final Report will contain an evaluation of data quality and a copy of the Quality Assurance Reports. Summary tables of analytical data will include data qualifiers consistent with the laboratory reports and third-party data validation reports.

7. REMARKS

This QAPP represents our professional opinions, which are based in part on client-supplied and currently available information and are arrived at in accordance with accepted hydrogeologic and engineering practices at this time and location. Other than this, no warranty is implied or intended. This report was prepared solely for the use of our client. Any reliance on the information contained herein by third parties shall be at such parties' sole risk.

8. REFERENCES

EPA. 1987. *Data Quality Objectives for Remedial Response Activities*. EPA/540/G-87/003. March 1987.

_____. 2002a. *US EPA Contract Laboratory Program, National Functional Guidelines for Inorganic Data Review*. EPA 540/R-01/008.

_____. 2002b. *Guidance on Environmental Data Verification and Data Validation*. EPA/240/R-02/004. November 2002.

_____. 2005. *US EPA Contract Laboratory Program, National Functional Guidelines for Superfund Organic Methods Review, Draft Final*. USEPA-540-R-04-009. January 2005.

USGS. variously dated. *National field manual for the collection of water-quality data: U.S. Geological Survey Techniques of Water-Resources Investigations, book 9, chaps. A1-A9*, available online at http://pubs.water.usgs.gov/twri9A/

_____. 2006. *Collection of water samples (ver. 2.0): U.S. Geological Survey Techniques of Water-Resources Investigations, book 9, chap. A4*, September 2006, accessed January 16, 2014, at http://pubs.water.usgs.gov/twri9A4/

Wilde, F.D., Radtke, D.B., Gibs, Jacob, and Iwatsubo, R.T., eds.. 2004 with updates through 2009. *Processing of water samples (ver. 2.2): U.S. Geological Survey Techniques of Water-Resources Investigations, book 9, chap. A5*, April 2004, accessed May 28, 2014, at http://pubs.water.usgs.gov/twri9A5/

WDEQ. 2011. *Ground Water Section, Quality Assurance Project Plan*. Water Quality Division. Ground Water Section. Cheyenne, WY. September.

TABLE 1

DATA QUALITY OBJECTIVES

DQO Parameter	Water Level Measurement	Aqueous Field Parameter Measurements	Aqueous Laboratory Analysis
Precision	Water level meter with tape +/- 0.01 foot. Acoustic meter +/- 0.1 foot	See Table 2 in the SAP: daily calibration generally to within +/- 5%.	In accordance with US EPA methods or water/ wastewater standard method listed on Table 4A in the SAP. Results will be reported to the MDL. See Table 2 for precision criteria for field duplicates and MS/MSD.
Accuracy	Water level meter with tape +/- 0.02 foot. Acoustic meter +/- 0.2 percent. See Table 2 for accuracy evaluation.	See Table 2 in the SAP: daily calibration generally to within +/- 5%. See Table 2 for accuracy check.	In accordance with standard methods listed above. See Table 2 for accuracy criteria for equipment blanks and trip blanks.
Representativeness	Measurement indicates approximate volume of water in well casing.	Represents water quality in aquifer. A minimum of three casing volumes will be purged and field parameters will be monitored before sampling using standard procedure. Sample on two separate events.	Represents water quality in aquifer. A minimum of three casing volumes will be purged and field parameters will be monitored before sampling using standard procedure. Sample on two separate events.
Completeness	90 percent (for accessible locations)	90 percent	90 percent
Comparability	Use of standard procedures.	Use of standard procedures.	Use of standard sampling, analytical, and quality control procedures. Use of certified laboratories.

Notes

RL = Reporting Limit

MDL = Method Detection Limit.

MS/MSD = Matrix Spike/ Matrix Spike Duplicate

TABLE 2

FIELD QUALITY CONTROL ELEMENTS

QC Element	Frequency	Acceptance Criteria	Corrective Action
Water Level Measurement			
Accuracy check: Compare measurements with the acoustic meter and the water level meter with tape, in a well not containing downhole equipment.	Once per sampling event.	+/- 0.2 percent.	Investigate the source of error and document. Apply corrections to data if necessary.
Aqueous Field Parameter Measurements			
Accuracy check: Perform duplicate measurement using second water quality meter.	Once per sampling event.	+/- 10 percent. (Single meter calibration criteria +/- 5%.)	Investigate the source of error and document. Apply corrections to data if necessary.
Aqueous Laboratory Analysis			
Field Duplicate	20 % of samples.	Water Sample: +/- 30% RPD	Investigate source of variability and document. Correct sampling/analytical protocols unless a matrix effect is indicated.
Matrix spike/ matrix spike duplicate: Collect MS/MSD three-volume sample in field.	5 % of samples or minimum once per sampling event. (Laboratory MS/MSD per method requirements, typically 5 %).	Water Sample: +/- 30% RPD	Investigate source of variability and document. Correct sampling/analytical protocols unless a matrix effect is indicated.
Equipment Blank	10% of samples, minimum once per sampling event.	< RL for each compound	Investigate the source of contamination and document. Correct sampling or handling protocols.
Trip Blank	One per VOC cooler storing aqueous samples.	< RL for each compound	Investigate the source of contamination and document. Correct sampling or handling protocols.

Notes

% = percent

< = less than

RL = Reporting limit

RPD = Relative percent difference

VOC = Volatile organic compound

FIGURE 1
PROJECT ORGANIZATIONAL CHART

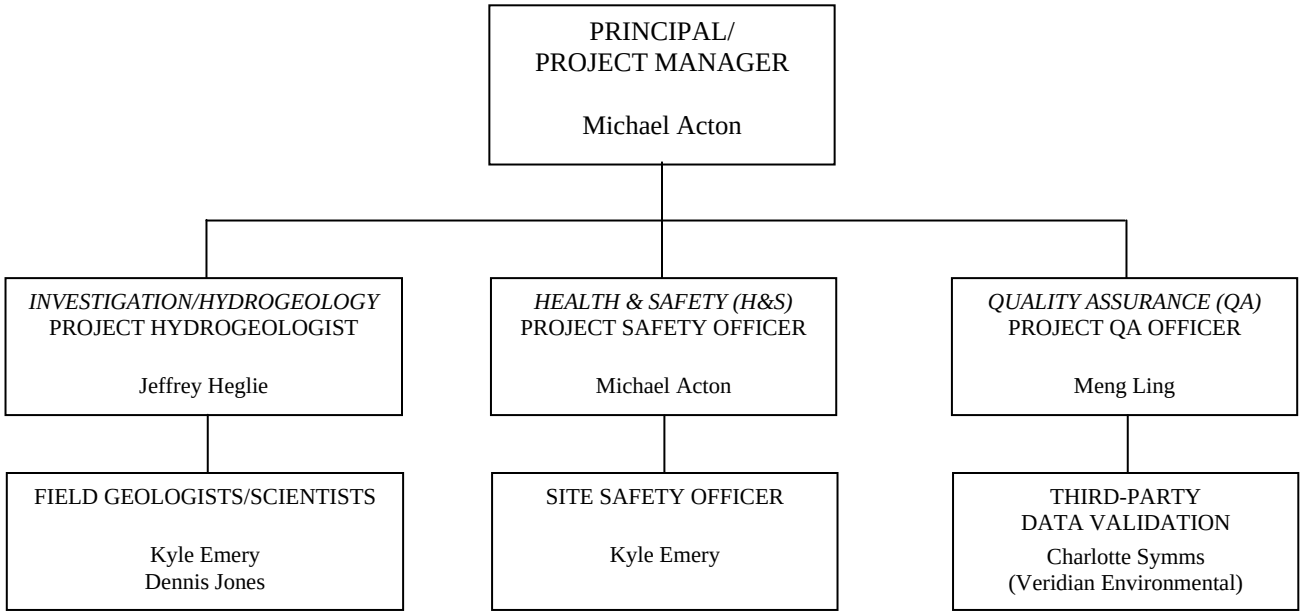

APPENDIX A

Curtis & Tompkins, Ltd. Laboratory Quality Assurance Manual

Curtis & Tompkins, Ltd

Laboratory Quality Assurance Manual

Version 8.4
Effective: August 1, 2013

This manual details the policies, practices, and procedures for ensuring that the quality of laboratory measurement data generated by Curtis & Tompkins' (C&T) two Berkeley lab facilities at 2323 Fifth Street and 2840 8th Streets, and its Hunters Point Shipyard Lab at 220 Fischer San Francisco, meet current international laboratory standards of practice specified by ISO 17025, US National Standards NELAC, and US Departments of Defense and Energy Quality Systems Manuals (NELAP Nov 2009, DoD QSM 4.2 and DoE QSAS 2.8).

This manual is the private property of Curtis and Tompkins Ltd. Any reproduction in whole, or in part, for any reason is specifically forbidden. If this page does not bear a blue letterhead logo, original signatures in blue ink below, indicating the copy number and number of copies printed, you do not possess a controlled copy of this document.

This document expires one year from the date above but may be superseded by a new revision at any time. Please contact Dr. Bruce Godfrey, Laboratory Director, at (510)-204-2222 if there is a need to verify the status of this revision.

Dr. Bruce Godfrey, Lab Director — Date 7/29/13

Teresa Morrison, QA Director — Date 7/29/13

Cheryl Bowden, Operations Manager — Date 8/6/13

John Goyette, Senior Program Manager — Date 8/1/13

Stefan D'Angona, Technical Director — Date 7/31/13

Laboratory Quality Assurance Manual

Table of Content

1.0 Introduction & QA Policy 6

1.1 Mission Statement
1.2 Basic Policies
1.3 Rules of the Game
1.4 Policy on Ethics and Data Integrity
1.5 Confidentiality
1.6 Conflict of Interest
1.7 Service to the Client
1.8 Control of Nonconforming Testing Work
C&T Commitment to Excellence in Data Quality (Ethics Agreement)

2.0 SCOPE AND PURPOSE OF THE QA PROGRAM 12

2.1 Content
2.2 Purpose
2.2.1 Contract Required Quality Specifications
2.3 Objectives and Scope

3.0 ORGANIZATION AND RESPONSIBILITIES 13

3.1 Organization
3.1.1HPS Lab Organization
3.1.2C&T Executive Team
3.2 Responsibilities and Authority
3.2.1 Stop and restart work authority
3.2.2 Client Notification of Work Impacted by Quality
3.2.3 Temporary Assignment of Responsibilities due to Absence or Leave
3.3 Lab Director
3.4 QA Director
3.5 Technical Director
3.5 Operations Manager
3.6 Director of Information Technology
3.7 Senior Program Manager
3.8 Facilities and Safety Manager
3.9 Department Manager
3.10 QC Chemists
3.11 Project Managers
3.12 Group Leaders
3.13 3.13 Chemists, Analysts and Lab Technicians
Figure 3.1 Organization Chart
Figure 3.2 HPS Lab Organization Chart

4.0 PERSONNEL QUALIFICATIONS & TRAINING 22

4.1 Lab, QA and Technical Directors, and Operations Managers Qualifications
4.2 Department Manager & QC Chemist Qualifications
4.3 Chemist, Analyst, and Project Manager Qualifications
4.4 Classroom Training
4.5 Functional Skills Training
4.6 Initial Demonstration of Capability (IDOC)

4.7 Training Records
4.8 Data Integrity Training

5.0 FACILITIES, EQUIPMENT, AND SUPPLIES 25
5.1 Laboratory Design
5.2 Facilities
5.2.1 Accommodation and Environmental Conditions
5.3 Equipment
5.4 Laboratory Information Management Systems (LIMS)
5.5 Supplies
5.6 Preventative Maintenance
Figure 5.1 2323 5th Street Floor Plan
Figure 5.2 2840 8th Street Floor Plan
Figure 5.3 C&T HPS Laboratory Site Plan

6.0 SAMPLE CUSTODY & SAMPLING 32
6.1 Sampling Procedures
6.2 Sample Custody
6.2.1 Sample Receipt and Acceptance
6.2.2 Sample Verification and Log-in
6.2.3 Sample Storage, Tracking, and Chain of Custody
6.2.4 Sample Disposal
6.3 Sample Extracts and Digestates
6.4 Subcontract Laboratory Services

7.0 PROCEDURES AND METHODS 36
7.1 Adherence to Accepted Methods
7.1.1 Method Modifications
7.1.2 List of Accredited Methods
7.2 Method Selection
7.3 Calibration of Lab Equipment, Traceability
7.4 Source & Working Standards: LIMS Standards Utility
7.5 Documentation of Events & Activities in Lab Benchbooks
7.5.1 Types of, and uses for Benchbooks
7.5.2 LIMS Logging of Benchbooks
7.5.3 Auditing Benchbooks
7.5.4 Archiving Benchbooks
7.6 Procedures for Dealing with Discrepancies and Customer Complaints
7.7 Procedures for Software, Calculations and Data Transfers
7.8 Equipment Calibration
7.9 Support Equipment
7.10 Measurement Uncertainty

8.0 DATA QUALITY CONTROL & ASSESSMENT 40
8.1 Quality Control Limits & Acceptance Criteria
8.1.1 Establishing Internal Laboratory Control Limits
8.1.2 Out of Control Data
8.1.3 Control Charts
8.2 Instrument Calibration Criteria
8.2.1 Initial Calibration Criteria
8.2.2 Continuing Instrument Calibration
8.2.3 Calibration Standards
8.2.4 Criteria used to evaluate calibration events.
8.3 Batch QC

8.3.1 Laboratory Control Sample (LCS)
8.3.2 Matrix Spike Samples (MS)
8.3.2 Matrix Spike Duplicate (MSD)/ Laboratory Control Sample Duplicates (LCSD)
8.3.3 Sample Duplicates
8.3.4 Quantitative evaluation of precision and accuracy
8.3.5 Method Blanks
8.4 Sample Quality Control
8.5 Audits and Scheduled Quality Assessments
8.5.1 Performance Evaluation Samples
8.5.1.1 Internal Quality Control Samples
8.5.2 Internal Audits
8.5.2.1 Quality Systems Audits
8.5.2.2 Data Quality Audits
8.5.3 External Audits
8.6 Comparability, Representativeness and Completeness
8.7 Method Validation Studies
8.8 Method Detection Limit (MDL) Studies
8.9 Limit of Detection (LOD) Determinations
8.10 Limit of Quantitation
8.11 Reporting Limit
Figure 8.1 Method Blank Acceptance Flowchart
Figure 8.2 Batch QC Acceptance Matrix

9.0 DATA REVIEW & RESULT REPORTING 50
9.1 Peer Review Process
9.2 Analytical Data Review
9.2.1 Semivolatile and Volatile Organics
9.2.2 Metals and General Chemistry
9.2.3 HPS Lab Data Review
9.3 Peer Qualifications
9.4 Department Manager Data Review, Reporting and Verification
9.5 Project Management Review
9.6 QA Review
9.7 New Work Review
9.8 Review of QAPP's, Tenders, and Contracts
9.9 Reporting the Results
9.9.1 Test reports containing the results of sampling
9.9.2 Opinions and Interpretations
9.9.3 Testing Results Obtained from Subcontractors
9.9.4 Electronic Transmission of Results
9.9.5 Format of Reports
9.9.6 Amendments to Test Reports
9.9.7 Additional Reporting Issues

10.0 DATA STORAGE & DOCUMENT CONTROL 55
10.1 Data Storage
10.2 Data Security & fraud
10.2.1 Integration Procedures: Controls for "Peak Shaving" & Manual Integration
10.2.2 "Time Travel" Controls
10.3 Distribution and Document Control Procedures
10.3.1 QA Program Manual
10.3.1.1 Controlled versions of the QA Manual
10.3.1.2 Revision/Replacement
10.3.1.3 Expiration

10.3.1.4 Revision frequency
10.3.1.5 Distribution
10.4 Standard Operating Procedures (SOPs)
10.4.1 Format
10.4.2 Review & Approval
10.4.3 Document Control
10.4.4. Electronic storage and revision control
10.4.5 Schedule for revision
10.5 Policy on Signatures, Initials, Electronic Signatures and Work Approvals

11.0 CORRECTIVE ACTION PROCESS 60
11.1 Corrective Actions for Sample Analyses and Related Activities
11.2 Corrective Action Notices
11.3 When Sample Analyses Cannot Meet Acceptance Criteria
11.4 Corrective Action for Systemic Errors
11.5 Filing & Tracking Corrective Actions
11.6 Reviewing Corrective Actions

12.0 QUALITY ASSURANCE REPORTING & RECORDS 62
12.1 Monthly QA Activity Reports
12.2 Annual Management Review of QA
12.3 Reports on Data Integrity Investigations
12.4 QA Recordkeeping

Appendix_1: Methods, Holding Times, Containers & Preservation
Appendix_2: List of C&T Standard Operating Procedures
Appendix_3: C&T Equipment List
Appendix_4: Laboratory Personnel-Training & Experience

1.0 INTRODUCTION & QUALITY ASSURANCE POLICY

This document is Curtis & Tompkins' (C&T) Quality Assurance Manual (QAM) and it describes the policies, procedures, and practices that ensure data quality and reliability. C&T exists at the pleasure of its clientele. Satisfying their requirements for data quality, service quality, timeliness and professionalism in every aspect of their interaction with our organization, is an essential part of our existence.

We at C&T are committed to a process of continuous quality improvement through employee participation. We provide training and require our staff to learn and understand the quality systems and documentation requirements necessary to implement this quality program. C&T's policy is to generate chemical measurement data of known quality as defined by adherence to standards and specifications for accuracy and precision. C&T is committed to producing test results that are both technically and legally defensible. The laboratory is responsible to conduct its testing and calibration activities in such a way as to meet the requirements of ISO 17025, to satisfy the needs of our customers, regulatory authorities and accrediting bodies. This manual presents the measures taken to ensure and document data quality, monitor and assess quality activities, and the mechanisms that promote quality improvement.

C&T is committed to:

1. Meeting customer requirements, and;
2. Operating in accordance with statutory and regulatory requirements, and;
3. Operating in accordance with the ethics policy stated in this document, and;
4. Training our staff to understand and implement our QA program, and;
5. Compliance with the ISO 17025, NELAC and DoD & DoE QSM standards for laboratory practice as they apply to our clientele.

1.1 Mission Statement

We are professionals in the chemical measurements business, for profit and the satisfaction of our clients and staff. We strive to exceed our clients' expectations while reporting results without bias. People are our greatest asset. We are committed to developing their capabilities in a challenging environment of personal and professional growth.

1.2 Basic Policies

We at Curtis & Tompkins conduct our activities in accordance with the Mission Statement above and:

1. We conform to all laws and statutes and regulatory requirements of the communities in which we do business, and act with integrity and social responsibility in dealing with our employees, clients, suppliers, and the public.

2. We provide employees with satisfying work, with performance judged objectively and reviewed at least once a year. We pay salaries equivalent to comparable market rates and promote from within wherever possible.

3. We expect a high ethical standard from our employees, with no tolerance for lying cheating, stealing, deceit or discrimination in any form or appearance.

4. We maintain a safety program for the protection of our employees and the public.

5. We have established a professional management system with appropriate delegation, accountability, communication, and control.

6 We maintain written corporate policies and procedures.

7 We are committed to professional practices, service quality and meeting customer requirements. We require all personnel familiarize themselves with the quality documentation and quality assurance policies and procedures in their work.

8 We implement plans to take advantage of opportunities for process improvement and monitor improvements to ensure they are effective.

9 We set objective performance measures for all personnel concerned with testing activities and quality documentation.

10 We are committed to adherence to national and international standards of laboratory practice e.g. ISO 17025, NELAC and DoD and DoE QSM standards.

1.3 Rules of the Game

High quality work begins with, and relies upon, good communication. Accordingly, C&T has developed and implemented the following rules for staff interaction to aid the quality improvement process. These rules are central to the success of the quality program.

1. Be willing to support our mission, vision, values, and policies.
2. Speak with good purpose. Listen actively and often.
3. Be open and honest in your communication with others.
4. Complete your Agreements. Be responsible to yourself and your coworkers.
   (a) Only make agreements you are willing and able to keep.
   (b) Clear up any broken or potentially broken agreements at the earliest appropriate time with the appropriate person.
   (c) Don't commit others unless you have their agreement.
5. If a problem arises, look first at the system, then at the people, and then take corrective action.
6. If you can't help the customer, help someone who can or who is helping the customer.
7. Have the willingness to win, and allow others to win. Commit to win/win relationships.
8. Focus on what works. Discard that which does not work.
9. Bad news does not get better with time. Tell it straight as soon as you learn. Don't shoot the messengers bearing bad news.
10. "Raise the flag" to seek help when you are overloaded, and offer help to others whenever you are able to.
11. Maintain a sense of humor.
12. Innovation is good. Risk it.

13. Be “proactive”. If you’ve followed all 12 points made above, take action on the issue you’ve identified. It’s generally better to take action and ask forgiveness, than to take no action on a quality issue you’ve identified.

1.4 Policy on Ethics and Data Integrity

Without a solid ethical foundation, C&T will fail. C&T expects its employees to be honest, and to know the difference between what is right and wrong. C&T expects its employees at all levels to adhere to a consistently high ethical standard. At C&T we don’t lie, cheat, steal or deceive each other, our customers, suppliers or anyone else. Frequent honest and open communication is expected at all levels of the organization. C&T strives to actively recruit, select, and promote employees who espouse these values, and terminate the employment relationships with those who do not.

This section describes C&T's policy regarding ethics and data integrity, and documents the steps taken when the quality of data is suspected or known to have been compromised by a deliberate act, error, or omission. It addresses the code of ethical conduct expected of all C&T employees, and applies at every level in the organization.

C&T expects its employees to conform to all laws and statutes in the locations where we do business, and to act with integrity and social responsibility in dealing with fellow employees, clients, suppliers and the public. We expect our employees to disclose and correct situations where C&T does not act in this manner….***Accordingly***:

C&T is committed to integrity in the workplace; this commitment includes all aspects of data production; analysis, review, and reporting; and all other aspects of the employment relationship.

All C&T employees are required to report any information concerning the possible or factual falsification or misrepresentation of data, shortcutting or modification of procedures or any associated components. Procedures for confidential reporting of data integrity issues are maintained to assure a receptive environment for any employee to privately discuss ethical issues or report items of ethical concern.
Falsification or misrepresentation of data include (but is not limited to) the following:

1. Intentionally altering an instrument, computer, or clock to falsify time records.
2. Altering the content of a logbook or data sheet with the intent to misrepresent.
3. Falsifying or misrepresenting the identity of an analyst(s).
4. Changing raw data documentation with the intent to obliterate or eliminate data;
5. Preparation or submittal of false or "faked" data packages or any components of data packages;
6. Use of illegal measurement techniques, such as peak shaving or fraudulent data system settings for the purpose of bypassing QC procedures;
7. Deliberately modifying/manipulating computer programs, spreadsheets, or other automatic data reduction tools for the purpose of bypassing QC or to misrepresent the data;
8. Any attempt to falsify or misrepresent data or events as they actually occur in the course of data production review and reporting;

All C&T employees are responsible for reporting any situation that may impact data quality. All C&T employees are obliged to discuss or otherwise inform laboratory management including Group Leaders, Department Managers, QA Director, and Lab Director of any

incident or activity that compromises data quality. C&T affirms that all employees are entitled to report such third party activity in a timely manner without fear of censure or reprisal.

Management will respond in a timely manner to all employee concerns regarding data quality. If a satisfactory resolution is not obtained in an ethics issue, or if a resolution is not possible at the level in which the situation is being investigated or reviewed; then the issue must be escalated in a timely manner the QA and/or Lab Director(s). The QA Director is responsible for promptly investigating any reports of known or suspected violations of this policy.

If an employee has a concern regarding a violation of the ethics and integrity policy:

1. Discuss the problem with the employees' immediate Group Leader or Department Manager.
2. If the issue involves a Group Leader or Department Manager, the matter should be discussed with the Quality Assurance Director.
3. The QA Director and Lab Director are responsible to resolve the problem within the scope of C&T's policies.

C&T's management is responsible to provide all employees with the facilities, equipment, and training to achieve the data quality objectives and ethical behavior goals stated in this policy.

Curtis & Tompkins has developed a statement of "Commitment to Excellence in Data Quality". The laboratory's ethics policy, as outlined above, is discussed with each new employee and each employee is required to complete the statement at the conclusion of their orientation. The ethics statement is then maintained in the individual's personnel file. Initial and recurrent ethics training is provided by C&T for all employees to remain current on this policy and its implementation. Ethics Training Classes are provided annually to all staff.

1.5 Confidentiality

The test & measurement data, reports, conclusions, and related information provided C&T to its clients or otherwise generated by C&T are considered confidential. No third party has a right to obtain information from C&T pertaining to our clients activities or related information without 1) permission from the client, or 2) appropriate and relevant legal process (warrant or subpoena). C&T employees may not provide any confidential information without an appropriate and valid reason, and written permission from the Lab or QA Director(s).

1.6 Conflict of Interest

C&T recognizes that certain situations may generate conflict of interest between C&T and its client, and/or C&T and its employees. To minimize the risk of an appearance or actual conflict of interest, C&T will strive to identify relationships between itself and its clients, and its employees that may constitute a conflict. Specifically, C&T employees are not allowed to 1.) work for a direct C&T competitor in any capacity, 2.) accept gifts, gratuities, or awards in excess of $100 valuation in a 12 month period from any client, supplier, or in excess of $200 valuation from all clients suppliers or agencies in a 12 month period, or 3.) work directly for a client of C&T in the same, or related capacities as work performed for C&T.

The appearance of, or actual conflict, must be corrected by terminating either the client or the employment relationship with C&T.

1.7 Service to the Client

It is C&T's policy to cooperate with customers or their representatives in clarifying the requests and in monitoring the laboratory's performance in relation to the work performed while assuring confidentiality to other customers. C&T seeks feedback, both positive and negative, from its customers, and establishes procedures for resolving customer complaints. C&T analyses and uses this feedback to improve its management systems, testing activities, and customer service. Procedures for the resolution of complaints received from customers or other parties have been established and records of complaints, investigations, and corrective actions taken by the laboratory are maintained.

1.8 Control of Nonconforming Testing Work

When any aspect of testing and/or calibration work, or the results of this work, do not conform to C&T's policies, principles and procedures or the agreed requirements of the customer, C&T will ensure the responsibilities and authorities for the management of nonconforming work are designated and actions (including halting of work and withholding of test reports as necessary) are defined and taken. When nonconforming work is identified; an evaluation of the significance of the nonconforming work is made; timely corrective action is taken, any decisions about the acceptability of the nonconforming work is made as necessary; and the customer is notified. If work is recalled; the responsibility for authorizing the resumption of work lies with the QAD.

C&T Commitment to Ethics & Data Integrity

Required of every employee and contractor since December 28, 1998

As a C&T employee, I have the right and responsibility to report any situation which may be adverse to quality or which may impact the final quality or integrity of data produced for our clients.

I will report immediately to management any information concerning the misrepresentation, or the possible misrepresentation, of analytical data (or any of its associated components). Examples include (but are not limited to): intentionally altering an instrument, computer or clock to falsify time records; altering the content of a logbook or data sheet with the intent to misrepresent; falsifying or misrepresenting the identity of an analyst(s); changing raw data documentation with the intent to obliterate or eliminate data; preparation or submittal of false or "faked" data packages or any components of data packages; use of illegal measurement techniques, such as peak shaving, and fraudulent data system settings for the purpose of bypassing QC procedures; deliberately modifying/manipulating computer programs, spreadsheets, or other automatic data reduction tools for the purpose of bypassing QC or to misrepresent the data; or any attempt to falsify or misrepresent data or events as they actually occur in the course of data production review and reporting.

I will not knowingly participate in any such activities, nor will I fail to report any such activities of which I become aware. I understand that if I knowingly participate in any such prohibited activity, I may be subjected to serious disciplinary action, up to and including termination for cause, as well as possible individual debarment against participating on contracts awarded by the Federal Government.

I will report any actual or suspected violations of this policy to management. I have read and understood the reporting procedures and ethics policy are described in detail in the Laboratory Quality Assurance Program and the C&T Employee Policy Manuals. I understand that I have both the right and obligation to discuss any violation, or potential violation, of the ethics policy with the Quality Assurance Director, the President, and/or the other channels of communication outlined in the policy.

_____

Print Name

_____ _____

Signature Date

2.0 SCOPE AND PURPOSE OF THE QA PROGRAM

2.1 Content

C&T provides a broad range of testing services to private and public sector clients. This Quality Assurance Manual (QAM) describes the measures taken by C&T to ensure the quality of the data produced in the laboratory. Regulatory, consensus, and customer technical/procedural standards are the foundation of C&T's approach to QA.

Policies, procedures and practices described in this manual are based on ISO/IEC guide 17025 the international standard for testing laboratory quality assurance procedures. C&T also addresses procedures described in US lab standards based on ISO 17025 including the National Environmental Laboratory Accreditation Program (TNI/NELAC EL-V1-2009) and Departments of Defense and Energy Quality Systems Manuals (DoD QSM 4.2 2010) (DoE QSM 2006)

Other internal documents and tools of C&T's quality assurance program include Standard Operating Procedures (SOPs, a tabulation of more than seven volumes totaling hundreds of distinct procedures appears in Appendix_2), and client-submitted Quality Assurance Project Plans (QAPPs) and Sampling and Analysis Plans (SAPs).

C&T defines quality as adherence to specifications. C&T's QA Program (QAP) specifies procedures and practices for controlling common testing errors; false negatives, false positives and misquantitations. Implementation of the QAP ensures appropriate, accurate and complete documentation of quality control systems as well as the testing process including accuracy, precision, and completeness of the measurement data.

C&T has established specifications including limits and acceptance criteria for calibration events, accuracy (spikes), precision (duplicates), and control samples for false positives (blanks) for all measurement procedures employed in its laboratories. Quality Control (QC) specifications are contained in the standard operating procedures (SOP) for each test method. References to specific documents, including revision status, and date implemented containing these specifications (SOP's) appear in Appendix_2 of this manual.

2.2 Purpose

An established QA program is essential for consistent production of valid test data. C&T's QA program ensures data generated, reviewed, and reported by C&T are produced and reviewed by trained, capable staff following appropriate procedures.

QC includes the specific checks and measurements within the QA framework, which are used to assess both the quality systems and the quality of the data produced. This QAM establishes standards that C&T adheres to and provides mechanisms to:

- Document the precision, accuracy, representativeness, comparability, and completeness of the analytical measurement systems and the data produced.
- Recognize deficiencies quickly and provide an efficient mechanism for correction.
- Monitor and control the management of data and to document its validity.

2.2.1 Contract Required Quality Specifications

Are established using client provided QAPPs and SAPs, and are not addressed in this document except to state C&T policy that contract requirements trump C&T's quality assurance program requirements whenever and wherever applicable.

2.3 Objectives and Scope

The objectives and scope of the quality assurance program include:

- Scheduling reviews or audit of technical procedures.
- Coordination of QA and QC procedures that provide a documented, consistent level of quality for environmental measurements.
- Responsibility for documentation of all data generated, stored, and reported as technically valid and legally defensible.
- Ensuring compliance with state and federal regulations and accrediting bodies as they pertain to the laboratory's analysis of environmental samples.

3.0 ORGANIZATION AND RESPONSIBILITIES

3.1 Organization:

C&T operates three lab facilities; two laboratory facilities (2323 5th and 2840 8th Streets) as one laboratory located in Berkeley, and a third satellite facility at the Hunters Point Shipyard (HPS) in San Francisco, CA. C&T's principal business is performing environmental and related chemical and radiological testing services. The laboratory is organized to facilitate sample management, testing performance, personnel management, data reporting and data management. The ratio of supervisory to non-supervisory personnel is organized to ensure adequate supervision and adherence to laboratory procedures and accepted techniques. The laboratory is fully staffed, including a QA Director who reports directly to the Lab Director ensuring autonomy of the quality function by separating responsibilities for Quality and Operational Management. An organization chart appears in Figure 3.1.

3.1.1 HPS Lab Organization

On October 17, 2011 C&T entered into an agreement with Tetra Tech EC (TtEC) for the management and operation of a lab providing alpha/beta and gamma spectroscopy radiochemical test and measurement services to support site remediation efforts for Navy contractors working at Hunters Point Shipyard and other former department of defense sites on the US West Coast. The HPS lab is staffed, managed, and operated with and by C&T employees as a satellite lab. TtEC owns the equipment and buildings, which it leases to C&T. The lab is located at the former Naval Shipyard ~12 miles from C&T's Berkeley laboratory. C&T's HPS Lab staff reports to the Technical Director, an organization chart for the HPS lab appears in Figure 3.2.

3.1.2 C&T Executive Team

C&T is collaboratively managed to assure overlapping and intertwined roles and responsibilities are effectively addressed and to ensure that the integrity of the

management system is maintained when changes to the management system are planned and implemented. C&T's executive team is comprised of the Lab, Technical, IT and QA Directors, the CFO, Salesperson, and Client Services Manager. The executive team meets weekly to review and discuss the issues that face the company, receive direction from the President and review their individual efforts and progress toward meeting goals and assignments. Job descriptions for each member of the executive team describe the overlapping responsibilities and roles and name the positions responsible.

3.2 Responsibilities and Authority

Quality Assurance is supported at the highest corporate level by C&T's Laboratory Director, who is sole stockholder, President, and CEO of C&T, and the author of this manual.

Development and implementation of QA policy within the laboratory is delegated by the Lab Director to the QA Director. The following positions in C&T's organization have specific responsibilities for the implementing C&T's QA Plan: Quality Assurance Director, Technical Director, Operations Manager, Quality Control Chemists, Department Managers, Group Leaders, Project Managers, Chemists and Analysts. The responsibilities of the 'Technical Director' outlined in the NELAC, DOD QSM and DOE QSAS standards are divided among the Laboratory Director, Quality Assurance Director, and Technical Directors.

3.2.1 Stop and restart work authority, Lab, Technical, and QA Directors, Operations and Department Managers are all vested with authority to stop work in progress to ensure nonconforming work is identified and corrected. The individuals in these positions are authorized to restart work after corrective action has been implemented. These individuals are responsible for evaluating the significance of the nonconformance and utilizing the established corrective action procedures to correct nonconformance and make decisions about acceptability of the work. These individuals are all vested with the responsibility to delegate authority to stop/re-start work to accommodate their absences from the lab planned or spontaneous such that there is always one person with this authority among the lab staff at typical hours of lab operation.

3.2.2 Client notification of data impacted by quality. The Lab Director is responsible for notifying clients within 30 days after identifying work that may have significant quality problems.

3.2.3 Temporary or long-term absence of key personnel. Employee leave, travel, training, illness, and client meetings cause key personnel absences. The Laboratory & Technical Directors and Operations Manager, and Department Managers are responsible for assigning temporary responsibilities to individuals at the laboratory. Temporary assignments are based on the duration of the absence. The authority to independently stop work in response to a quality problem should be documented to provide the individual to whom the responsibility is assigned the necessary authority to execute this order.

Responsibilities of the Lab Director detailed in this manual shall be assigned to the Technical Director, Operations Manager, or Quality Assurance Director the in the absence of the Lab Director. The reassignment of responsibility for other personnel shall be documented ad hoc, or by memo to the affected individuals.

3.3 Laboratory Director is primarily responsible for the application and development of the

laboratory's resources to meet current and future client requirements. The Lab Director's responsibilities encompass the general business management of the laboratory, and all its resources, including equipment, facilities, and personnel. Other responsibilities include, but are not limited to:

- Monitoring standards of QA/QC performance; and monitoring the validity of the analyses performed and data generated to assure reliable data.
- Implementing corporate programs and directives for Operations, Personnel, Facilities, LIMS, and Financial management.
- Strategic planning and business development
- Records storage and security

If absent for a period of time exceeding fifteen (15) consecutive calendar days the Lab Director shall designate the Operations Manager, IT or Technical Director, or Client Services Manager to temporarily perform the duties of the Lab Director.

3.4 QA Director (QAD) is responsible for proactively managing the incremental improvement of C&T's services. The QAD is responsible for data quality management systems, standards compliance, laboratory accreditations and lab safety program compliance. The QAD functions independently from Laboratory Operations, having responsibility for quality assurance and safety oversight independent of production and financial responsibility.

The QAD ensures data quality by assuring and appropriately documenting compliance to standards. The QA Director is responsible for designing and implementing improvements in human, technical, safety and quality systems to improve data quality, operational effectiveness and efficiency. Other responsibilities include, but are not limited to:

- Leading the laboratory's QA/QC and data quality improvement activities
- Implementing and revising the QA program/QA Manual
- Ensuring SOP's are written, organized and compliant to standards
- Completing, evaluating, reporting PE/PT results and corrective actions
- Organizing records and documenting personnel training, (IDOC's)
- Providing QA/QC and Safety program training for lab staff,
- Documenting validation of new test & measurement services,
- Proactively ensuring compliance to ethics program
- Performing and documenting Internal audits and data assessments
- Organizing, maintaining & completing standard (NELAC etc) reporting requirements
- Managing, maintaining, and expanding the lab's accreditations and licenses
- Detecting, documenting, monitoring, resolving, and closing CARs

If absent for a period exceeding fifteen (15) consecutive calendar days, at his discretion, the Lab Director will temporarily assume the QAD's duties or assign them to the Technical Director. If this absence exceeds 35 consecutive calendar days, the primary TNI & DoD Accrediting Body shall be notified in writing.

3.5 Technical Director is the laboratory's lead test & measurements technical resource.

He ensures established test & measurement services are maintained and improved and is responsible for development and validation of new services. He is responsible for improving procedures and implementation of new technologies to reduce costs, and maximize operating efficiencies by effectively managing and developing available technology solutions. The Technical Director oversees the technical aspects of day to day lab operations, assessing systems production capacity, addressing cost and quality issues impacting production and playing a key role in staff training and development. The Technical Director improve efficiencies by minimizing down-time and maximizing instrument through-put and assisting the Operations Manager in training staff to operate new & existing test and measurement equipment.

If absent for a period of time exceeding fifteen (15) consecutive calendar days the Technical Director shall designate the Lab Director or Operations Manager to temporarily perform his duties. If this absence exceeds 65 consecutive calendar days, the DoD Accrediting Body shall be notified in writing.

3.6 Operations Manager is responsible for the day-to-day operations of the laboratory. She ensures the timely & profitable production of chemical measurement services. She coordinates work scheduling and laboratory resource allocation. She supervises and manages adherence to QA/QC, hold time and turnaround requirements. She assesses production capacity, and provides solutions for human resources and quality issues. She provides staff development services, career path evaluations and ensures the lab staff is developing necessary skills and abilities for the work today and in the future.

- Assigning and clearly communicating operational priorities,
- Allocating lab resources to meet client schedule & requirements
- Supervising Department Managers, Group Leaders, supervisors, and staff
- Ensuring sufficient assets, qualified employees are available to perform and supervise the laboratory's work,
- Assisting with and conducting employee performance reviews and audits
- Projecting staffing needs: hiring and firing staff
- QA corrective actions related to staff training and performance

If absent for a period of time exceeding fifteen (15) consecutive calendar days the Operations Manager shall designate the Lab Director or Client Services Manager or Technical Director to temporarily perform her duties.

3.7 Director of Information Technology is responsible for C&T's enterprise software and information technology systems. He manages a team of technical professionals that define, design, implement, and test software applications and implement the Laboratory Information Management System (LIMS). Among other responsibilities listed herein, the IT Director documents LIMS software, utilities and programs, controls LIMS security and access, validates LIMS software, develops & implements systems for controlling control data integrity, and maintains audit trails for data changes. The IT Director uses his deep knowledge of database and information technology to ensure that the application configurations, user interfaces and computer work-flows are optimized for both lab and client users. The IT director designs system functionality and layers supporting componentized application including CRM (Client Relationship Management) software, LabLIne user web portal, C&T website and other applications supporting business functionality. He designs and develops innovative solutions to address needs in application

functionality, performance, reliability, realistic implementation schedules, and best practice development goals and principles.

3.8 Senior Program Manager (Client Services Manager) is responsible for client services, and inside sales. He designs, plans, coordinates and facilitates service delivery between the laboratory operations staff and its clientele. His primary goal is the seamless provision of laboratory test and measurement services that delight the lab's clientele. The Client Services Manager performs or delegates the provision or completion of client specification (QAPP) reviews, quotes and bids, service inquiries, sampling media/supplies, sampling and courier services, sample login, reporting and invoicing. He is responsible for ensuring communication of QAPP specifications and review of sampling and analysis plans and clearly communicating the requirements to the operations staff. He trains and supervises the client services staff consisting of Project Managers, Login staff, couriers, and receptionists. The Client Services Manager develops programs and systems that meet client needs and are consistent with the QA program. He plans a key role in C&T's marketing and sales efforts, and works the client relationship management software system.

3.9 Facilities and Safety Manager is responsible for facilities maintenance and implementation of C&T's Laboratory Safety Program at C&T. The FM works closely with the Lab Director to complete facilities maintenance and development programs and projects and in the implementation of the lab safety program. The tasks specifically attributable to the FM in the implementation of the QA Program are specified below:

- Safety program Implementation & Staff Training
- Facilities function and facilities systems performance
- Laboratory and sample waste disposal

3.10 Department Managers equip and maintain a well trained and informed staff to meet the expectations of our clients by efficiently and profitably generating defensible data on time. The tasks specifically attributable to Department Managers in the implementation of the QA Program are specified below under each of their five defined core management responsibilities:

- *Planning*: Setting management goals & objectives
- *Staffing*: Training a staff of up to 15 analysts in key technical skills, e.g., instrument & software operations. Providing documentation of training efforts and PE/LCS sample analysis. Providing performance feedback to employees on their QA responsibilities. Orienting staff to QA responsibilities & procedures.
- *Organizing & Directing*: Assigning staff to complete tasks and projects related to QA Plan implementation
- *Controlling*: Reviewing data for compliance & completeness, implementation of the peer review process within their group. Writing and updating SOP's, and ensuring that current SOP's are available to Chemists & Analysts in their group and at their workstations. Ensuring the correct and complete implementation of the benchbook, run log, and maintenance log procedures. Ensuring compliance with the calibration standards tracking and control procedures within their group. Initiating and completing corrective action procedures, as needed.
- *Technical Functions*: Ensuring the implementation of preventative maintenance procedures for instruments and equipment.

Generally, Department Managers are responsible for understanding, communicating specific requirements to chemists and analysts in their group, and ensuring compliance with QAPPs and specific aspects of C&T's QA Plan and in the case of the HPS Lab Director, the HPS QAPP. They ensure that all data produced in their group complies with all C&T specifications for technically and legally defensible data.

3.11 Quality Control Chemists are experienced laboratory analysts or equivalent. QC Chemists may be temporarily assigned to perform Project or Department Manager functions in the event of short absences. QC Chemists are primarily responsible for the following tasks:

- *Data Review*: Performing data review to assure lab data meet SOP and project specific requirements and assuring adherence to lab documentation practices.
- *QAPP Review*: Review project plans against C&T capabilities during bidding process and after award of contract. Entering client- and project-specific information into the LIMS databases. Assist Project Managers with data validation questions.

3.12 Project Managers (PM) are responsible for being the single point interface between clients and the laboratory. Clear communication to all constituents; Clients, Department Managers, QA & Lab Directors, analysts and field technicians, is their most important responsibility.

- Clearly communicating client requirements specified in QAPPs and elsewhere to all affected individuals within the laboratory. Obtaining, by appropriate means, the required commitment of all relevant individuals to understand and agree to meet client requirements.
- Informing Lab and QA Directors of situations and issues, and recommending actions required to meet client needs and expectations.
- Reviewing data packages submitted by Department Managers for compliance to Client requirements and QAPP specifications.
- Communicating, in a clear and timely manner, the status of work to clients either verbally or through written reports such as case narrative or project management reports.

3.13 Group Leaders and HPS Lab Supervisors are analysts who have demonstrated interest and ability to organize, schedule, and train other analysts in a specific analysis (i.e.: TPH-Diesel, gamma spectroscopy, etc..) or range of related analyses (i.e.: wet chemistry, radiochemical analyses). They are responsible for assisting the Department Managers to which they are assigned improve the productivity and quality of the data produced by the department by:

- Scheduling and assigning daily tasks, and performing peer and supervisory data review for compliance to established procedures and requirements,
- Training and assisting training of less experienced staff,
- Initiating and completing corrective action procedures, as needed.

3.14 Chemists, Analysts and Lab Technicians are responsible for understanding and applying QA and QC procedures in the areas in which they are assigned, and for seeking clarification as needed. C&T's QA Plan relies primarily on the ability of individuals performing analyses to do so in a manner that is technically and legally defensible. This demands attention to detail and a thorough understanding of the analytical process.

Analysts receive formal orientation in the laboratory's QA Program within their first 90 days of employment. As part of this process the following responsibilities are clearly communicated:

- Clear, legible, and compliant entries into all benchbooks. Compliance with all procedures and specifications detailed in the SOP for Benchbooks entries.
- Clear, complete, and compliant documentation of all significant events in the measurement process is a requirement. Significant means any step required to reconstruct the process after the fact, in order to detect an error or to demonstrate compliance to procedure.
- To obtain from Department Managers, Group Leaders or peers, a clear and complete understanding of QC compliance criteria for the tests and procedures they are performing.
- To inform Department Managers, Group Leader or peers of their understanding of any situation which is out of compliance with the QAP such that corrective action is initiated, if required.
- To perform self and peer data review as needed to insure work is completed to specifications
- To organize data packages and deliverables in a logical consistent manner or as specified in procedures

Figure 3.1 C&T Organization Chart

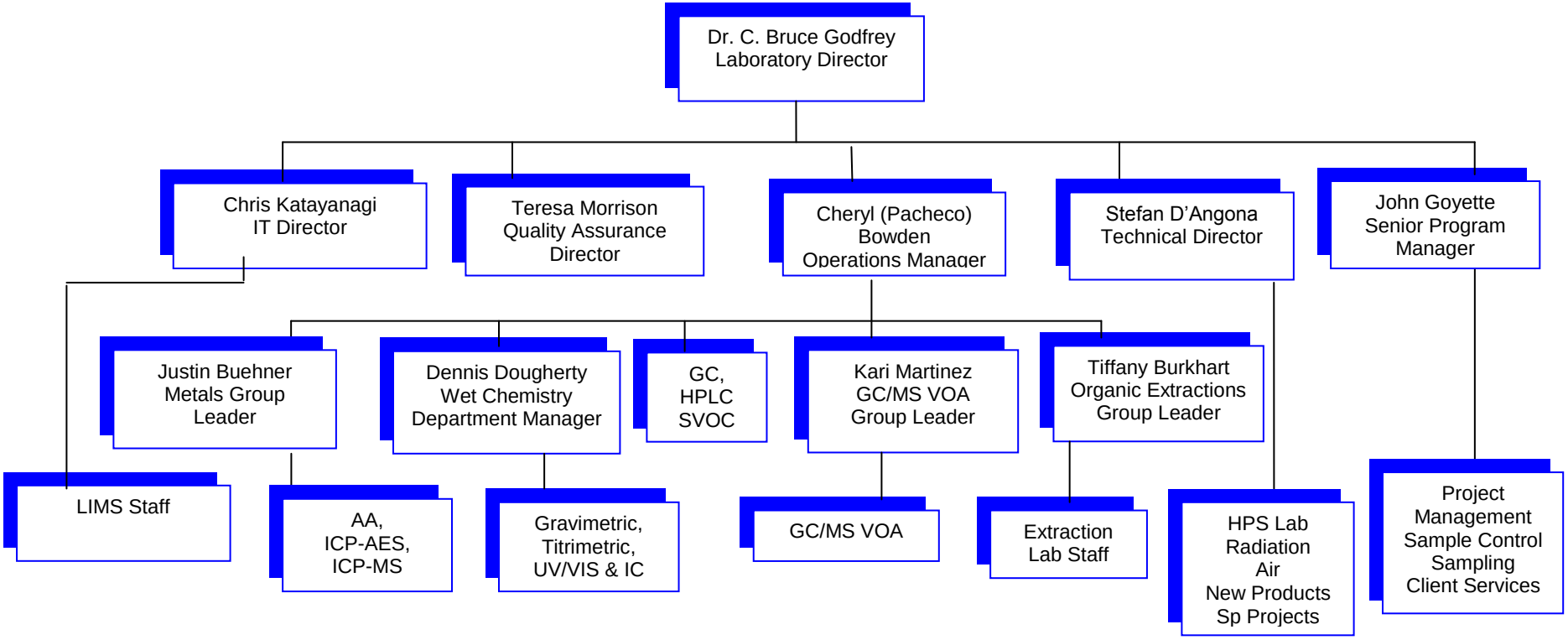

Figure 3.2 HPS Lab Organization Chart

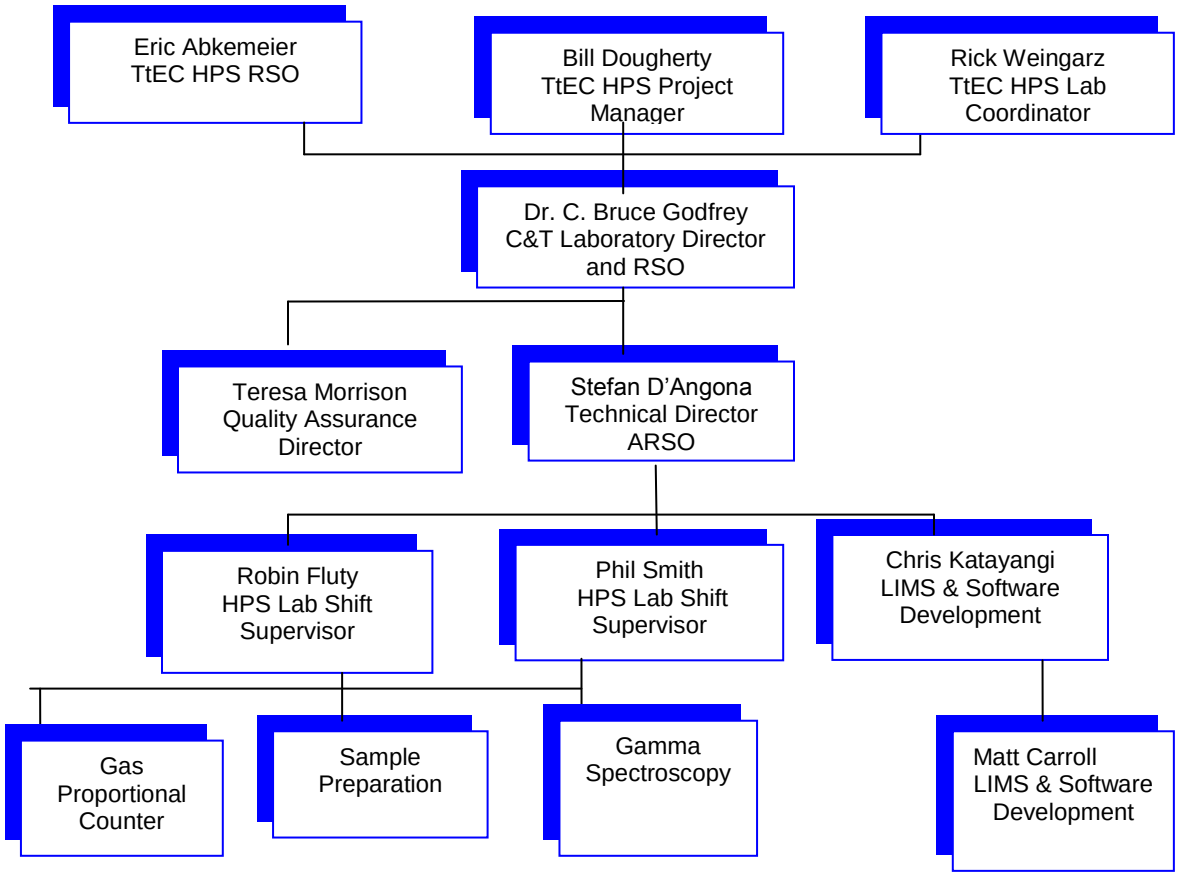

4.0 PERSONNEL QUALIFICATIONS & TRAINING

C&T's management ensures the competence of all who operate equipment, perform tests, evaluate results, and sign reports. C&T employs sufficient supervision when using staff who are undergoing training. C&T staff is qualified on the basis of appropriate education, training, experience and/or demonstrated skills. C&T is responsible for fulfilling specified personnel training and certification requirements. The requirements for personnel certification might be regulatory, included in the standards for the specific technical field, or required by the customer. The personnel responsible for the opinions and interpretation included in test reports should, in addition to the appropriate qualifications, training, experience and satisfactory knowledge of the testing carried out, also have:

- Fundamental, relevant knowledge of the technology used in the test or measurement;
- knowledge of the general requirements expressed in the procedures and standards; and
- an understanding of the significance of deviations found with regard to the normal use of the items, materials, products, etc. concerned.

C&T formulates goals with respect to the training and skills of its staff. C&T has established policies and procedures for identifying training needs and providing training of personnel. The training program is outlined in C&T Training Manual and is relevant to the present and anticipated tasks of the laboratory activities. The effectiveness of the training actions is evaluated and improvements are implemented and tracked as necessary to ensure process improvement.

When C&T uses personnel who are employed by, or under contract to another entity, C&T ensures such personnel are supervised and competent and that they work in accordance with the laboratory's management system.

C&T maintains job descriptions for managerial, technical, and key support personnel involved in testing activities. C&T's management authorizes personnel to perform particular types of sampling and/or testing, to issue test reports, to render opinions and interpretations and to operate particular types of equipment. C&T maintains records of demonstrations of competence, relevant authorizations, educational degrees received, training completed, skills and experience of its technical personnel, including contracted personnel. Specific requirements for key personnel are outlined below.

4.1 Lab, QA and Technical Directors, and Operations Managers Qualifications

The minimum qualification for QA Directors, Laboratory Directors, and Operations Managers are:

- A bachelor's degree in the chemical, environmental, biological sciences, physical sciences or engineering, and three years of experience in a related field, or a master's degree and one year of related experience (three additional years of experience can substitute for the bachelor's degree). At least twenty-four (24) college semester credit hours in chemistry and at least two (2) years of experience in the environmental analysis of representative inorganic and organic analytes for which the laboratory maintains accreditation.
- Proven communication skills.

- Proven management skills.
- Knowledge of the laboratory's technical and business regulations.
- Laboratory Directors should have three years of experience directly related to laboratory management.

4.2 Department Manager & QC Chemist Qualifications

Department Managers & QC Chemists must have the following minimum qualifications:

- A bachelor's degree and three years experience directly related to the activity they are supervising.
- One year of managerial/supervisory experience or two years of active participation within the existing group.
- Strong communications skills.
- Knowledge of applicable methodologies and systems under which the group routinely operates.
- Technical skills in computers and/or instrumentation relevant to the department they are supervising.

4.3 Analyst, Chemist, Group Leader, and Project Manager Qualifications

Analysts, chemists, Group Leaders, and Project Managers will range in experience from entry to senior level. We seek entry-level employees for chemist and analyst positions and then train them according to procedures and practices outlined in later sections of this chapter. We seek entry-level chemists and analysts with the following skills and background:

- University or College level classroom training in chemistry or a related discipline, and/or 2 years experience in laboratory testing.
- Strong communication & team-working skills
- Skills defined in the job description (GC operation, etc.)
- Strong commitment to quality and teamwork.

4.4 Classroom Training

C&T has developed a training program that outlines curricula and processes for formal training classes in the following areas:

- Ethics and Integrity
- QA/QC Training:
  Fundamentals 1: Intro to QA Program
  Fundamentals 2: Batch QC
  Fundamentals 3: Calibration
  Benchbooks, Logbooks and Documentation
  Computer chromatographic integration procedures
- General methods and specific analytical procedures
- Performance Management
- Communication Skills
- LIMS System
- Laboratory Health & Safety

The training files identify specific resources, course content, and outside workshops and meetings which have been approved for use in the development of our staff. Periodic training is conducted to ensure that all employees maintain knowledge of current issues and practices in the laboratories. Selected personnel participate in managerial, QA/QC training or technical seminars, workshops, and professional organizations.

4.5 Functional Skills Training:

In addition to the classroom type of training outlined above, C&T has developed a workstation approach to laboratory skills training. Each group in the laboratory is broken down into workstations, which typically comprise one analysis (for example PAH's by EPA 8310), but may comprise many test methods (for example wet chemistry workstations). Workstation skills criteria have been developed, with training and performance milestones. Typically Department Managers are responsible for providing training however, in many instances, Group Leaders and peers provide training at each workstation. Performance criteria to demonstrate chemists' competence to perform analyses at each workstation have been or are being developed. These criteria include an initial demonstration of proficiency consisting of the successful analysis of four consecutive laboratory control samples. Ongoing proficiency is demonstrated by annual analysis of a performance evaluation sample, a method detection limit study, or repetition of 4 consecutive laboratory control samples.

4.6 Initial Demonstrations of Capability (IDOC): After analysts are trained to perform tests and operate workstations they are required to demonstrate their capability to perform test and measurement procedures to meet satisfactory limits as a demonstration of capability to perform at the workstation. IDOC are typically 4 LCS processed by the analyst with compliant results. Records of IDOC's are generated and maintained by the QA Director and these become part of the employee's record.

4.7 Training Records: The QA Director is responsible for creating & maintaining records of each individual's training. Individual training records document classroom training events, IDOCs, trainer, date of training and any other required or additional training.

4.8 Data Integrity (Ethics) Training is provided as a part of new employee orientation and recurrent training is provided annually for all C&T employees. Employees are trained to understand that any infractions of the laboratory data integrity policy including breaches in the ethics policy related to management procedures shall result in a detailed investigation that could lead to consequences including immediate termination or civil/criminal prosecution. The initial data integrity training and the annual refresher training have signature attendance sheets to demonstrate all staff have participated and understand their obligations related to data integrity.

Data integrity training emphasizes the importance of proper written narration on the part of the analyst with respect to those cases where analytical data may be useful, but are partially deficient. The topics addressed in ethics & data integrity is documented in presentation slides, handouts, and class agendas. Handout materials are provided to all trainees. The training addresses all aspects outlined in Section 1.4 of this manual including

- organizational mission and its relationship to the critical need for honesty and full disclosure in all analytical reporting
- how and when to report data integrity issues, and record keeping;
- **I**ntegrity training documentation;
- in-depth data monitoring and data integrity procedure documentation; and
- specific examples of breaches of ethical behavior
- written ethics agreements,
- and any external resources available to employees.

5.0 FACILITIES, EQUIPMENT, AND SUPPLIES

5.1 Laboratory Design

C&T's facilities were designed and engineered to provide worker safety and mitigate contamination of samples. The facilities are engineered and equipped to perform a wide variety of environmental analyses. The use of appropriate, well maintained facilities, equipment and supplies is fundamental to the production of high quality data.

5.2 Facilities

Curtis and Tompkins facilities consist of two separate buildings approximately 3 blocks apart in Berkeley, and a laboratory at the Hunters Point Shipyard in San Francisco. The primary facility is located at 2323 5th Street, a 23,500 square foot laboratory facility where soil and water and other non-gaseous matrix samples are received and processed. Figure 5.1 presents a floor plan of 2323 5th Street.

The second facility located at 2840 8th Street is a 13,000 square foot laboratory used for analyses of air and gas phase samples as well as determinations of volatile organics in water and soil samples. Figure 5.2 presents a functional floor plan for 2840 8th Street.

The HPS Lab is located in several trailers at the former Hunter's Point Naval Naval Shipyard in San Francisco. This laboratory is owned by Tetra Tech Inc. and staffed, managed, and operated by C&T under a subcontract agreement between TtEC and C&T to serve the needs and requirements as specified by the Tetra Tech EC, Inc. Basewide Radiological Support, HPNS, Sampling and Analysis Plan, (Field Sampling Plan and Quality Assurance Project Plan) Revision 1, July 2011. The HPS lab performs sample preparation and radiological analyses for gross alpha and beta radiation and Gamma radiation. Figure 5.3 presents a diagram of the HPS Lab facility

C&T maintains reasonable security at its facilities ensuring controlled access to proprietary information by implementing access control procedures designed to insure that only authorized individuals have access to:

- samples in storage, preparation, and analysis,
- all computer systems,
- data files and paper files containing results of sample & control analyses,
- confidential and proprietary information, and
- maintenance of audit trails for data changes in manual and automated systems

C&T documents these procedures in standard operating procedures (SOPs) for LIMS, computer systems, facilities, and sample control.

5.2.1 Accommodation and Environmental Conditions C&T's laboratory facilities are equipped with appropriate energy sources, lighting, and environmental conditions to facilitate correct performance of the testing activities. C&T ensures that the environmental conditions do not invalidate the results or adversely affect the required quality of any measurement. All technical requirements for accommodation and environmental conditions that can affect the results of tests are documented in test results.

C&T monitors controls and records environmental conditions as required by the relevant specifications, methods and procedures or where they influence the quality of the results. Attention is paid to dust, electromagnetic disturbances, radiation, humidity, electrical supply,

temperature, and sound and vibration levels, as appropriate to the technical activities concerned. Tests and calibrations are stopped when the environmental conditions jeopardize the results of the tests and/or calibrations. C&T maintains effective separation between neighboring areas in which there are incompatible activities. Measures are taken to prevent cross-contamination. Access to and use of areas affecting the quality of the tests and/or calibrations is controlled. Measures are taken to ensure good housekeeping in the laboratory.

5.3 Equipment

C&T uses modern test equipment for processing samples and data, appropriate to the procedures employed. The proper and acceptable performance of our instruments and measurement equipment is of paramount importance to implementing a measurements Quality Assurance program. Procedures for calibration and maintenance of instrumentation ensure that our clients receive technically and legally defensible data. Method- or instrument-specific procedures are detailed in appropriate SOPs. C&T guidelines and method specific criteria established in the SOPs require that each instrument be calibrated with traceable reference materials, which are checked against a second source to prevent quantitation errors. Manufacturer recommended maintenance is performed and, where applicable, specific performance criteria are measured and documented at specified intervals. Instructions on equipment use and maintenance including manufacturer's user manuals for the equipment are readily available in the laboratory, or on the LIMS.

SOPs have been developed that establish a system of instrument maintenance and analysis logs to track calibration events, equipment utilization, and samples processed on each instrument. This system allows documentation of maintenance and calibration events for each instrument, and provides instrument operators with historical information needed to quickly solve maintenance problems and conduct repairs. Critical parts inventories and preventative maintenance procedures are incorporated for each instrument system throughout the laboratory.

SOPs have been developed and implemented to establish calibration frequency, acceptance limits, correction factors and other corrective actions for minor laboratory equipment, such as thermometers, balances, ovens, hot plates, and fume hoods.

C&T's LIMS system contains a comprehensive database of all equipment in use at the laboratory. The database treats each instrument as a system comprised of a collection of assets. Each asset is a discrete piece of equipment that can typically be inter-changed with others of like kind to comprise another similar system. Each instrument system in the laboratory has a unique identification and number (e.g. GC19) which allows users of the LIMS system to identify the instrument used to analyze a sample or batch of samples. This electronic tracking system is a powerful adjunct to instrument (run) logs and maintenance logs described above. The instrument ID system is a key to the sequence number ID system employed by C&T's LIMS which generates a unique ID number for every measurement processed by the LIMS. The 12-digit sequence number specifies the instrument system ID, date, time and temporal order relative to related measurements and calibration events.

Systems have been designed to use this electronic equipment database to schedule preventative maintenance events, automatically track calibrations, and list all samples, QC samples, and calibration events processed by individual instruments.

A summary of laboratory equipment is included in Appendix 3. Contact the laboratory if you require other information about our instrumentation and equipment.

5.4 Laboratory Information Management System, (LIMS)

C&T operates an integrated computer network to automatically collect, reduce, and distribute information and data throughout the laboratory. C&T's LIMS utilizes distributed database technology that provides nearly "paperless" operations. The core of the LIMS system is an Oracle relational database that provides sample-tracking, a results database, custom electronic and hardcopy reporting, and data management services. The LIMS operates as a single system connecting the laboratory facilities.

Procedures are established and implemented for protecting & securing data including, but not limited to, integrity and confidentiality of data entry or collection, data storage, data transmission, and data processing.

The goals of C&T's LIMS QA program are:

- To insure computer processes and specific programming steps are appropriately tested and documented.
- To insure that electronically reported and stored data reliably represent test results.
- To insure test results and other critical data are secure from unauthorized or inadvertent changes.
- To insure that automated data collection reduction and storage processes are in substantial compliance to government agency and industry recognized standards for ensuring data integrity in automated laboratory operations.

C&T's LIMS QA program is based on the following principles, which define the necessary control issues underlying the automated collection and processing of laboratory data:

- DATA: Data corruption can occur at any stage from collection to recall. Acceptable programming control systems must provide evidence of reasonable protection from data corruption.
- TESTING: Formulas and programs are verified by inspection and testing. Sample data test sets are used to verify the correct operation of automated systems including data capture, manipulation, transfer, and reporting. Software testing procedures are conducted when new software is developed or purchased or the program code is modified or otherwise manipulated. These procedures apply to commercial software e.g. Agilent EZ-Chrom and Chemstation, when used as component automation processes. Commercial off-the-shelf software (e.g. MS Office, Oracle, other programs) in general use within their designed application range is considered to be sufficiently validated.
- AUDIT: Critical transactions and processes should be designed with audit trails for logging transactions. The audit trail generally uses a password or equivalent to identify the responsible users or person(s). The LIMS components and system should be periodically inspected in-depth from raw data through final report.
- CHANGE: Program and process changes are a routine part of LIMS development and evolution, and must be documented. Change control procedures capable of

tracking system operations, hardware and software changes should be established. Change procedures should include pre-installation test protocols and appropriate document update routines.

- STANDARD OPERATING PROCEDURES (SOPS): Routine LIMS procedures are appropriately documented. These SOPs are for user training, and available, appropriate user documentation.
- DISASTER: System controls must incorporate planning for unusual events and system stresses. These include back-ups for prolonged total system failure, disk crashes, routine archiving, CPU and power supply failures.
- SUPPLIERS & VENDORS: Laboratory instruments, data reduction systems, hardware, and/or software should meet agency guidelines (i.e. US-EPA document 2185 Good Automated Laboratory Practices 1995) for design, support, notification, and documentation criteria for the items they supply.

C&T's LIMS QA program is overseen by the Quality Assurance Director and implemented by Information Technology Director and the LIMS staff.

5.5 Supplies

C&T is dependent on suppliers' capabilities to manufacture and deliver necessary items in a timely manner which conform to product specifications as agreed to by both parties. It is the Department Manager's responsibility to monitor supplier performance on these issues, ensure that incoming reagent checks and instrument verification are completed as needed, and to initiate corrective action in the event of a performance failure.

Specific procedures have been written and implemented for screening solvents and reagents used in the measurement process if required. Typically, acceptable performance of reagents in QC samples is adequate proof of acceptability. Validating performance of supplies insures they do not contribute artifacts that influence the measurement process. The acceptable performance of solvents and reagents, as well as the manufacturer and lot numbers of reagents and solvents, are recorded as part of the measurement process. Annual supplier evaluations are performed with a report on supplier performance based on defined attributes for performance and product quality.

5.6 Preventative Maintenance

Preventive maintenance is vital to the proper operation of analytical instruments and laboratory equipment. Routine, documented maintenance prevents unscheduled downtime and missed holding times or client due dates. It also increases the life span of most equipment. The majority of instruments and HVAC equipment at C&T are under service and preventative maintenance contract with outside suppliers. Routine maintenance tasks and intervals have been established for many of the instruments employed in C&T's laboratory. Maintenance schedules and tasks for each instrument are maintained in instrument maintenance logs. Preventative maintenance, if performed by C&T personnel, is the responsibility of analysts and Department Managers. The documentation that maintenance has been performed, and at what interval, is to be available in the laboratory at or near the instrument, and available for review by the QA Directors, auditors, or others. SOPs for preventative maintenance have been established for equipment such as balances, pH meters, automatic pipettes, as well as larger instrument systems like ICP Spectrometers, and GC's and GC/MS's.

FIGURE 5.1 Floor Plan 2323 5th Street

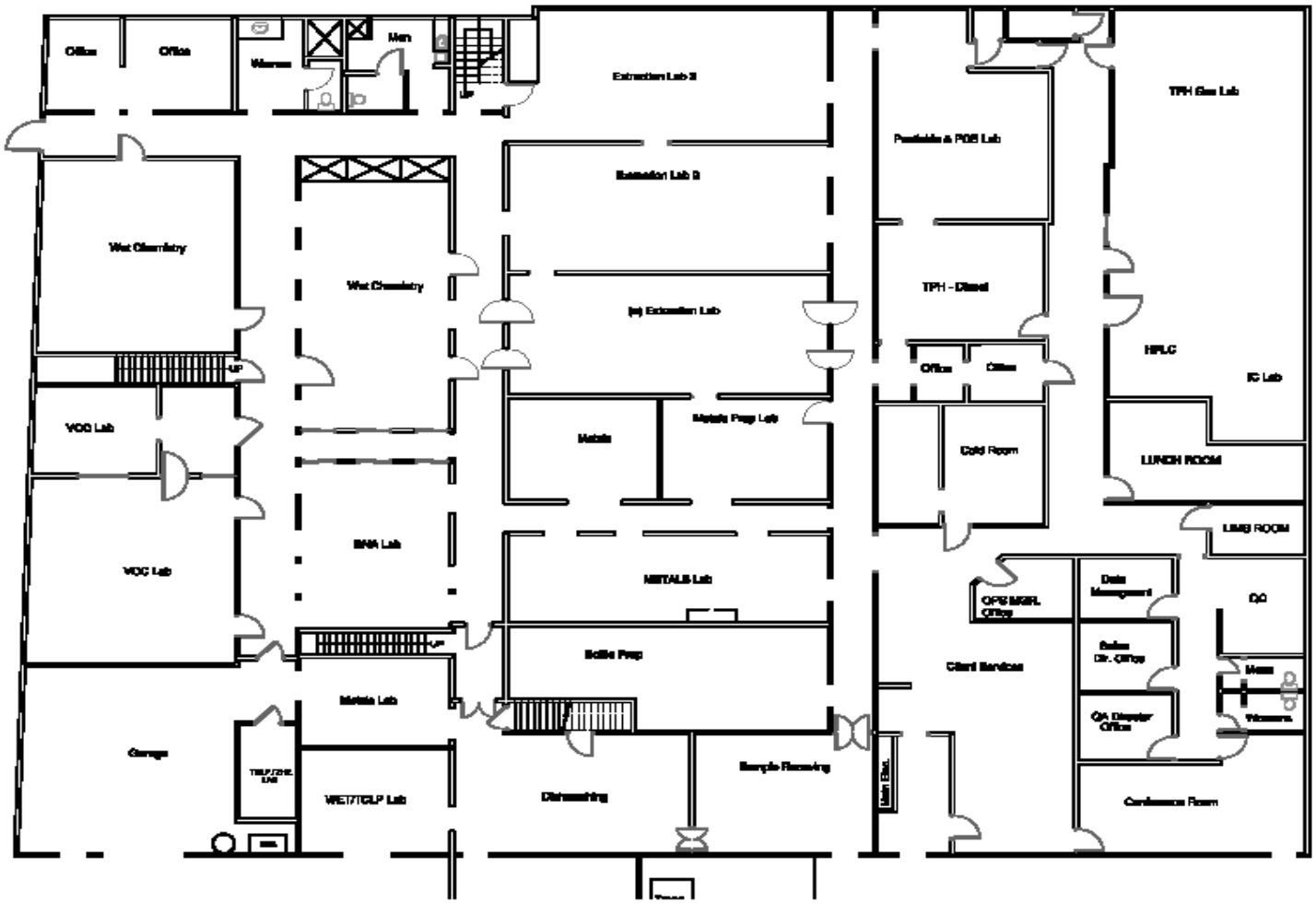

Figure 5.2 Floor Plan 2840 8th Street

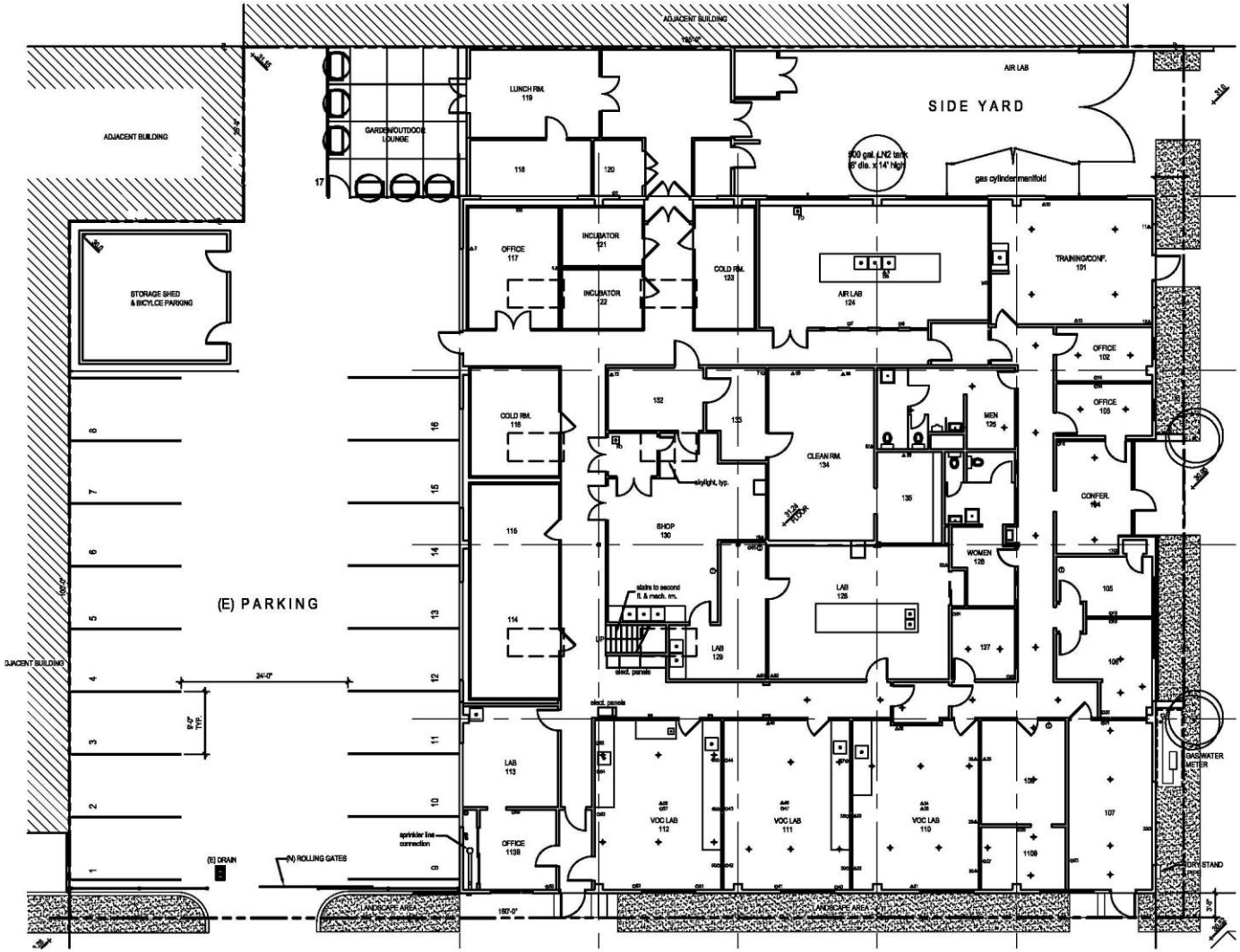

Curtis & Tompkins, Ltd

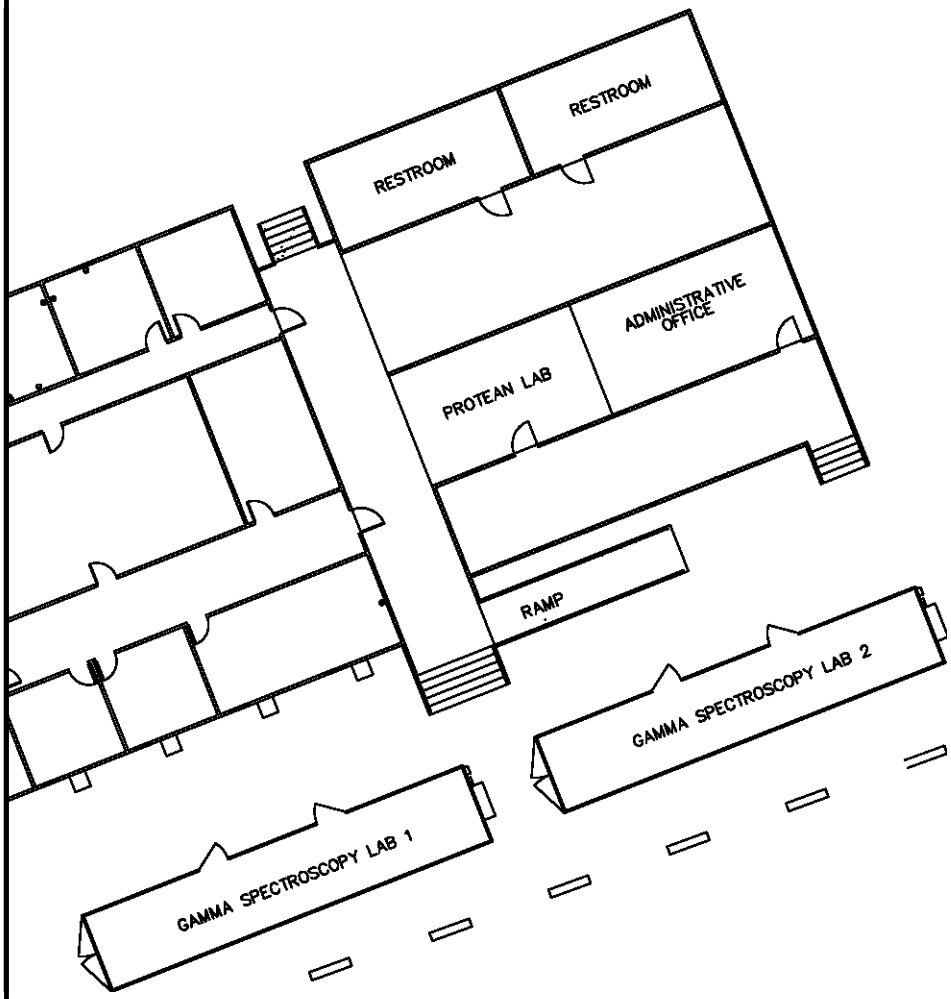

Figure 5.3 **C&T HPS Laboratory Site Plan**

Hunters Point Shipyard, San Francisco, CA

6.0 SAMPLE CUSTODY & SAMPLING

C&T implements a system for uniquely identifying the samples to be tested, to ensure that there can be no confusion regarding the identity of such samples at any time. This system includes identification for all samples, sub-samples, preservations, sample containers, tests, and subsequent extracts and/or digestates. Through data entry login into its LIMS, C&T maintains an unequivocal link with the unique field ID code assigned to each sample. The laboratory ID code is placed as a durable label or mark on each sample container. The "Laboratory Number" ID code is the link that associates the sample with related laboratory activities such as sample preparation. When the sample collector and analyst is the same individual, or C&T pre-assigns numbers to sample containers, the laboratory ID code may be the same as the field ID code.

The HPS Lab has a unique site specific process for sample login that satisfies sample identification and integrity requirements specified herein. Distinct SOPs have been developed to specify HPS sample login procedures.

6.1 Sampling Procedures

C&T provides sample containers for many clients, in accordance with US-EPA and other specified requirements for container type, size, and preservation. Laboratory SOPs for container preservation and traceability have been implemented to ensure compliance with standards and regulations. Appendix_1 lists appropriate sample size, container type, preservation and holding time requirements for most parameters, for both liquid and solid matrices.

C&T may provide sampling services for the procurement of soil gas, ambient air, drinking water, wastewater, groundwater, soils, solid wastes, fuels, foods, feeds, and other materials requiring chemical or biological testing and measurements. In these instances, a Sampling Plan is prepared and approved by lab supervisors and the client prior to sample collection. The laboratory shall be accredited for performing these activities to the extent these programs exist and are administered by a competent AB. Sampling plans shall specify procedures for recording relevant data and operations relating to sampling that impact the data quality or use for the measurement undertaken. Sampling personnel are trained in these activities prior to conducting sampling activities.

6.2 Sample Custody

All samples collected by and/or received at C&T are considered to be physical evidence and are handled accordingly. The possession of samples is traceable from the time of sample collection until their final disposition. A sample is considered "in custody" when:

- It is in your actual possession.
- It is in your view after being in your possession.
- It is in a secure area.

The Sample Control Standard Operating Procedures define specific procedures for system and access controls, security, sample receipt, log-in, chain-of-custody, storage, and tracking throughout the analytical process. These procedures are briefly described below.

6.2.1 Sample Receipt and Acceptance

C&T's sample receipt and acceptance procedures include full and complete documentation, sample identification, the location, date and time of collection, collector's name,

preservation type, sample type and any special remarks concerning the sample. Laboratory labeling places a unique identification on each sample with durable water resistant labels and the use of indelible ink. We provide or encourage clients to use appropriate sample containers with preservatives as needed. C&T adheres to specified holding times and requests sufficient sample volume to perform the necessary tests from its clients. C&T implements procedures to advise clients when samples show signs of damage, contamination or inadequate preservation; and we qualify any data that do not meet the above requirements.

Samples are received at 2323 5th Street through a designated entrance at the laboratory and are transferred to the 2840 8th Street facility as applicable. Air and gas phase samples may be received directly at the 2840 8th Street lab.

Samples are received at the HPS lab soil prep Conex trailer. The HPS lab is limited to processing samples for radiochemical contamination for the US Navy from its former shipyards at Hunters Point and Mare Island, NAS Alameda, and Treasure Island. Separate procedures apply to receiving, accepting and rejecting the potentially radioactive samples generated from remedial efforts at these sites.

6.2.2 Sample Verification and Log-in

C&T implements procedures for verifying and documenting sample preservation. If the sample does not meet applicable sample receipt acceptance criteria, C&T either retains correspondence and/or records of conversations concerning the final disposition of rejected samples; or fully documents any decision to proceed with the analysis of samples not meeting acceptance criteria. The condition of samples is noted on the chain of custody or within C&T's LIMS. The analysis data from compromised samples are qualified on the final report through case narrative.

Specifics of sample condition include:

- Presence/absence of custody seals or tapes on the shipping containers and the condition of the seals (intact or broken)
- Presence/absence of a chain-of-custody
- Presence/absence of sample tags or labels
- Agreement between sample tags, the chain-of-custody and any other client documentation
- Condition of the samples when received (e.g., cold or ambient; intact, broken or leaking; headspace in VOA vials; etc.)
- Appropriate sample size (i.e. sufficient volume for analyses)
- Correct sample preservation (volatile samples are checked immediately after analysis, not upon receipt).

Any discrepancies are noted and the client is immediately notified via posting a login report at the client's LabLine address, C&T's secure web portal.

During the login process, the following information is logged by LIMS, becoming part of the laboratory's permanent records, easily retrievable upon request and readily available to individuals who will process the sample. The field ID code, along with the date and time of sample collection and time of receipt, the requested analyses, including applicable method references and any comments resulting from inspection of the sample are included. All documentation, such as memos, chain of custody, or transmittal forms that are transmitted

to the laboratory by the sample transmitter, are retained in a “job jacket” along with the original chain of custody record form. A “Login Report” of this information is immediately generated and attached to the client job jacket. Login Technicians then peer review the login report against the submitted chain of custody. A second, Project Manager level login review may occur.

6.2.3 Sample Storage, Tracking, and Chain of Custody

Samples are stored according to the conditions specified by preservation protocols in the methods. Samples that require thermal preservation are stored under refrigeration at 4ºC +/- 2°C unless differing regulatory or method specific criteria exist. Samples are stored away from all standards, reagents, and food in such a manner to prevent cross contamination. VOC cross contamination is monitored in VOC sample storage areas. Sample fractions, extracts, leachates and other sample preparation products are stored according to specifications in the method. Before and after login, all samples are stored either on ice or under refrigeration at 4ºC. Aqueous samples for volatile organic analysis are stored in a refrigerator prior to transfer 2840 8th street. All sample storage locations are documented in a sample refrigerator catalog.
Samples received at 2323 5th Street for processing at 2840 8th Street or the HPS lab are logged in as described above and transferred under chain of custody to 2840 8th Street and/or the HPS lab and processed as described herein.

Legal Chain of Custody Protocols

Legal chain of custody procedures are used for evidentiary or legal purposes. If a client specifies that a sample is to be used for evidentiary purposes, C&T has a written SOP for handling those samples. Internal chain of custody procedures are followed on all samples to ensure the validity of all data. Samples are signed out of the Sample Custody Log when they are removed from the refrigerators. The sample number, date, and analyst initials are recorded in this log. When samples are returned, the date, time, and analyst’s initials are again recorded. Chain-of-custody is maintained for sample extracts and digests through signatures in the extraction and digestion records.

6.2.4 Sample Disposal

C&T has SOPs for the disposal of samples, digestates, leachates, extracts and other sample preparation products. Samples are disposed of in accordance with the sample disposal SOP approximately thirty days after the final report date unless longer storage is requested. The disposal date is recorded for closure of chain of custody. Samples are always disposed of in proper manner. The Facilities Manager is responsible for the safe and legal handling of the laboratory waste streams, including waste or residual samples. The Facilities Manager may delegate sample and waste disposal tasks to the Client Services Manager and/or Sample Control Technicians.

Waste samples are classified according to SOP. The residual portions of all soil, water, wastewater, and industrial waste samples are considered hazardous and/ or toxic for the particular testing characteristics for which they were submitted. HPS Lab samples are stored in facilities at the HPS site and handled according to site specific SOP.

The hazardous and/or non-hazardous status of all classified waste samples is determined according to Federal, State and Local regulations and exemptions. Residual portions of waste samples are stored in appropriate designated sample storage areas until samples

are designated to be disposed. Once designated for disposal, residual samples are stored at the laboratory waste storage facility, where they are drummed, transported off site, and disposed under manifest. Waste samples are stored in proper containers, eliminating or minimizing the possibility of incompatible wastes contacting each other. Waste sample containers are clearly labeled as to their content and status. If either the content or status is unknown, a reasonable explanation of the nature of the wastes shall be clearly visible on the container.

All sample waste transported off-site is properly manifested, and appropriate records are maintained to document the disposition of the waste when it leaves our facility. The Facilities Manager is responsible for these activities including selecting a TSD facility or similar service for all sample wastes handled at the laboratory. Names of qualified suppliers are filed and accessible. Waste treatment, storage, and transportation to a TSD facility is fully documented and these records stored for five (5) years.

Waste risk management and prevention are the practice of C&T. Staff is trained in waste handling practices. Standard Operating Procedures (SOPS) describe the handling of individual waste streams. Emergency response plans have been developed to deal with contingencies of accident and uncontrolled hazard due to laboratory waste.

6.3 Sample Extracts and Digestates

It is C&T's policy to regard all sample extracts and digestates that are "current" with respect to holding times as active samples. The storage of these extracts and digestates is controlled using procedures identical to those described above for samples.

Once holding times for sample extracts and digestates have expired, these sample derivatives are stored, handled, treated and disposed of as described for samples above, and in accordance with procedures defined in SOPs.

6.4 Subcontract Laboratory Services

Periodically, C&T has a need to subcontract chemical measurement services which we either 1) do not perform, or 2) are not appropriately certified to perform, or 3) do not have available capacity to perform in a timely manner. When it is necessary to subcontract services the Senior Program Manager is responsible, through the Client Services group, for the implementation of the procedure as specified in the Subcontract Lab SOP. Clients shall always be informed when C&T uses a subcontract lab.

A list of qualified subcontract labs, and the specific analyses for which they are used, is generated and maintained in the LIMS under Subcontract Labs. Subcontracted samples are logged in and treated identically to samples processed in the laboratory. Client identity, confidentiality, and custody procedures are strictly maintained. All subcontract labs must be appropriately certified and/or accredited to perform the requested procedures required to the client’s specifications. Relevant certification programs include but are not limited to, all state certifications, ISO17025, DoD, or DoE. For designated projects, subcontract labs should receive QAPPs, agree to meet project and/or site specific PQL's , reporting conventions, and QC limits, and agree to provide appropriate documentation and information prior to receiving samples. As, and if, needed subcontract labs should be visited for a site review of their procedures. Where appropriate, complete data packages including QC sample data are requested from all subcontract labs.

7.0 PROCEDURES AND METHODS

C&T uses appropriate methods and procedures for all tests it performs. These include sampling, handling, transport, storage and preparation of items to be tested, and, where appropriate, an estimation of the measurement uncertainty as well as statistical techniques for analysis of test data. C&T maintains instructions on the use and operation of all relevant equipment, and on the handling and preparation of items for testing where appropriate. All relevant instructions, standards, manuals and reference data are maintained current and are readily available to personnel. Deviation from test and calibration methods is allowed only if the deviation has been documented, technically justified, authorized, and accepted by the customer.

C&T uses sampling & testing methods which meet its customer's needs and which are appropriate for the tests and/or calibrations it undertakes. Methods published in international, regional or national standards are preferable. C&T ensures the latest valid edition of a standard method is employed unless it is not appropriate or possible to do so. When the customer does not specify the method to be used, C&T selects appropriate methods that have been published either in international, regional or national standards, or by reputable technical organizations, or in relevant scientific texts or journals, or as specified by the manufacturer of the equipment. Methods developed at C&T may also be used if they are appropriate, and these methods will be validated and compared to compendial standards when possible. C&T informs its customers when the method proposed by the customer is considered to be inappropriate for any reason.

From time to time the lab may be required to develop and validate Performance Based methods. The introduction of test methods developed by the laboratory for its own or its customer's use is a planned activity and is to be assigned to qualified personnel equipped with adequate resources.

The Quality Assurance Director maintains documentation of the laboratory's methods and capabilities. The methods most commonly used by the laboratory are included in the Holding Times and Sampling Containers table presented in Appendix_1.

7.1 Adherence to Accepted Methods

C&T's policy is to adhere to compendial methods published by regulatory agencies (US-EPA), industry organizations (WPCF-SMWW), and standards organizations (ASTM, NIST, or AOAC). Adherence to performance parameters specified in published and accepted methods insures that C&T's clients receive a defined, recognized and legally defensible product.

7.1.1 Method Modifications

Periodically, it is necessary to modify compendial methods to fit C&T's equipment, the sample type received, or to accommodate client requests, or meet other requirements. It is C&T's policy that whenever methods are modified either in the performance, acceptance criteria, or in any significant manner, the method reference on the client report will reflect the modification and the modification will be described. Major method variances require approval of regional EPA offices, or adherence to recently developed performance based methods criteria developed by US-EPA and or outlined in DoD QSM 4.2. (2010).

7.1.2 List of Accredited Methods

C&T maintains accreditations and certifications from multiple agencies and Accrediting Bodies (AB's) employing multiple standards and requirements. Lists of methods for which the laboratory is accredited are maintained individually by AB and applicable standard.

7.2 Method Selection

C&T performs test & measurement services according to the methods that its clients request. If the method(s) requested by the client is inappropriate, technically unsound, or if a substitute method will provide superior results, usability or service, C&T will recommend substitution. Project Managers are most frequently involved in method selection processes. The Client Services Manager and QA Directors are also involved in and responsible for this process. Method selection is guided by principles of data usability and the data quality objective process. C&T endeavors to recommend methods that provide the accuracy, precision, and regulatory defensibility required for the intended use of the data. It is C&T's policy to ensure that the lab's clients are fully apprised of the utility of the data they purchase.

7.3 Calibration of Lab Equipment, Traceability

The appropriate calibration of all instrumentation and equipment is crucial to the validity of measurement processes. C&T SOPs specify calibration procedures by instrument type, calibration frequency, reference standards, calibration acceptance criteria, and calibration documentation procedures. Establishing traceability of calibration source materials, equipment (e.g. Thermometers), and reference standards is specified in SOPs that include equations used to calculate calibration factors, goodness of fit, and other criteria. Specification requirements for calibration procedures and practices apply to all measurement process including instrumental (GC, GC/MS, ICP, etc) and general chemistry methods (i.e., volumetric, gravimetric, titrimetric, etc.) as well as equipment, (ovens, thermometric controls, pipettes, etc.). Where calibrations give rise to a set of correction factors, (e.g thermometer corrections) procedures shall be established to ensure that the corrections are appropriately documented, updated, and available to all users of the equipment.

Procedures for assuring that balances, refrigerators, ovens, automatic pipettes, and other minor laboratory equipment are appropriately calibrated and operating within measurable tolerances are established; logs of these measurements are maintained by the designated group. Outside service companies accredited under ISO 17025 or ISO Guide 25 are employed to perform traceable calibrations of balances and other minor laboratory equipment.

7.4 Source & Working Standards: LIMS Standards Utility

The acquisition, inventory, general preparation, shelf life, and use of calibration, surrogate, spike, and internal standards is documented and tracked. C&T has developed an electronic database utility within the LIMS for performing this task. This utility assigns unique Identifications to source materials (SS = Source Standard) used for calibrating instruments as well as the working solutions (WS=Working Standard) and materials prepared from these sources and used to calibrate the equipment. Analysts are required to the LIMS standards for documenting the source, concentration, traceability, and component identity of all calibration equipment, reagents and solutions used for measurement processes.

Analysts are required to scan certificates from source material providers associate the certificate with the unique source standard ID number. LIMS stores these scans as well as references to lab benchbooks and page numbers where the preparation of calibration standard materials are documented to insure traceability of calibration.

7.5 Documentation of Events & Activities in Lab Benchbooks

At C&T, benchbooks are defined as bound, paginated laboratory notebooks that contain raw laboratory data, notes, and records of activities performed by individual chemists, or groups. In a "paperless" automated laboratory like C&T, benchbooks serve two primary functions:

- They provide a means to independently document the validity of data entered or contained in the LIMS using hardcopy (scanned facsimiles) data linkages.
- They provide a mechanism for documenting events, procedures and observations not yet established in the LIMS.

Benchbooks provide a ready reference to document activities outside of the LIMS.

7.5.1 Types of, and uses for Benchbooks

Benchbooks have several uses and users. The primary uses of benchbooks are:

- ***Sample Preparation.*** Customized Excel spreadsheets printed and assembled into a bound benchbook prior to use.
- ***Equipment Calibration & Maintenance***: Balance and Pipette calibration, pH meter operation, DI water system performance checks etc.
- ***Instrument System Maintenance Logs*** used for recording repairs, preventative maintenance, configuration changes, detectors, columns, new lamps, source cleaning, and all other events of significance. Logging this information allows reconstruction of events for troubleshooting and error detection.
- ***Calibration Standard Benchbooks*** used for recording the preparation of source, intermediate and working standard calibration solutions. Scanning source standard certificates of traceability, content, lot # etc allows linkage and traceability of source and working standards via LIMS.
- ***Personal benchbooks*** used by Project Managers and analysts to record events, activities, client conversations and instructions.

7.5.2 LIMS Logging of Benchbooks

Each benchbook has a unique LIMS ID number to allow data to be linked to benchbooks and pages within them. The location, department, status (active or inactive), function or purpose, and assigned individual is logged onto the LIMS.

LIMS Benchbook Database Field Definitions

NUMBER:	Unique number generated by the system for each book
DEPARTMENT:	Group or Department to which the book is assigned
INDIVIDUAL:	Responsible Individual
LOCATION:	Room number or shelf
DESCRIPTION:	Function, description of the book's purpose or content
STATUS:	Active or Inactive

7.5.3 Auditing Benchbooks
The benchbooks may be audited as part of internal audit procedures, and more often as part of training activities. Compliance to LIMS logging, content, use, clarity and reconstruction testing, and archiving are monitored.

7.5.4 Archiving Benchbooks
Once a benchbook is completed and removed from active service, the status is changed to 'archived' in LIMS and the archived location is designated. The QA Director is responsible for maintaining the integrity and storage of benchbooks.

7.6 Procedures for dealing with discrepancies and customer complaints
Procedures shall be followed for soliciting feedback and corrective action whenever testing discrepancies, departures from documented policies and procedures or from standard Specifications; or departures from documented policies and procedures occur. C&T has also established procedures for actively soliciting client feedback and dealing with client complaints.

7.7 Procedures for Software, Calculations and Data Transfers
When computers or automated equipment are used for the acquisition, processing, recording, reporting, storage or retrieval of test data, C&T implements procedures to ensure that: a) computer software developed at C&T is documented and validated as being adequate for use; b) data are protected and secured for integrity and confidentiality; and c) computers and automated equipment are maintained to ensure the integrity of test data. Laboratory spreadsheets developed for data acquisition and/or reduction reporting are validated. C&T performs routine QC sample testing, blanks, spike, and duplicates. QC sample analyses also test data acquisition and reduction systems. Through C&T's LIMS sample data sets are routinely tested to verify the operation of all automated data reduction processes (including data capture, manipulation, transfer, and reporting). Software testing is performed any time new software (including commercially available software, such as Chemstation) is installed or programming code is modified or manipulated.

7.8 Equipment Calibration
C&T maintains procedures for safe handling, transport, storage, use and maintenance of test & measuring equipment to ensure proper functioning and to prevent contamination. Equipment that has been contaminated or gives suspect results, or has been shown to be defective or outside specified limits, is taken out of service until repairs have been completed and shown by calibration or test to perform correctly.

If equipment is contaminated by a sample or otherwise rendered inoperable, C&T examines the effect of the defect or departure from specified limits on previous tests and/or calibrations and institutes controls for nonconforming work as applicable. C&T labels, codes or otherwise identifies all equipment. Dates of last calibration are indicated as well as the date or expiration criteria when recalibration is due. When equipment is shipped outside the lab, C&T ensures that the function and calibration status of the equipment are checked and shown to be satisfactory before the equipment is returned to service. When intermediate checks are needed to maintain confidence in the calibration status of the equipment, these checks are carried out according to a defined procedure. Testing equipment, both hardware and software, are safeguarded from adjustments which would invalidate the test and/or calibration results.

7.9 Support Equipment

Support equipment is not the actual test instrument, although necessary for laboratory operations. Support equipment includes balances, ovens, refrigerators, freezers, incubators, water baths, temperature measuring devices (including thermometers and thermistors), thermal/pressure sample preparation devices and volumetric dispensing devices (such as Eppendorf or automatic dilutor/dispensing devices), if quantitative results are dependent on their accuracy, as in standard preparation and dispensing or dilution into a specified volume.

C&T maintains all support equipment used in proper working order. The records of repair and maintenance activities, including service calls, are kept. Support equipment is calibrated or verified at least annually, using recognized NIST traceable materials when available, and bracketing the range of use. The results of such calibration or verification are acceptable if within the specifications required of the application for which this equipment is used or the equipment is removed from service until repaired. Correction factors are maintained in records as applicable to correct all measurements. Raw data records are recorded in benchbooks and retained to document equipment performance. Typically, on each day the equipment is used, balances, ovens, refrigerators, freezers and water baths are checked and documented. The acceptability for use or continued use is based on the needs of the analysis or application for which the equipment is being used. Volumetric dispensing devices (except Class A glassware) are checked for accuracy on a quarterly basis.

7.10 Measurement Uncertainty

C&T has developed & implemented documented procedures for estimating the measurement uncertainty (MU) applicable to specific testing methods and/or their individual components. Test reports shall include a statement of the estimated MU only when required by client instruction. If a client or project requires MU to be reported, C&T reports the estimated uncertainty based on established procedure or another scientifically valid and documented procedure. The estimated MU is expressed as a range (±) around the reported analytical results at a specified confidence level, typically 95-99%. At times, C&T employs its in-house, statistically-derived LCS control limits based on historical LCS recovery data as an estimate of the minimum laboratory contribution to MU at a defined confidence level, typically 95%.

In some cases, the nature of the test method precludes rigorous and statistically valid calculation of MU. In these cases, C&T attempts to identify all the components of uncertainty and make a reasonable estimation of MU. C&T ensures the form of reporting of the result does not give a false impression regarding MU when clients request these values reported. The reasonable estimation of uncertainty shall be based on knowledge of the performance of the method and on the measurement scope and shall make use of previous experience, statistical data reduction(s), data validation, and other applicable factors.

8.0 DATA QUALITY CONTROL & ASSESSMENT

C&T implements control procedures for monitoring the validity of tests it conducts for the public. The QA data resulting from these activities is recorded in such a way that trends are

detectable and, where practicable, statistical techniques are applied to reviewing results. This monitoring is planned and reviewed and may include, but not be limited to, the following: regular use of certified reference materials and/or internal quality control using secondary reference materials; participation in inter-laboratory comparison or proficiency-testing programs; replicate tests using the same or different methods; retesting of retained samples; correlation of results for different characteristics of an item. C&T's primary objective is to satisfy its clients' needs, thus contractual specifications trump method specifications for data quality, accuracy, precision, and completeness.

C&T implements written protocols to monitor positive and negative controls such as blanks, matrix spikes, and reference materials. We perform tests to define the variability and/or repeatability of the laboratory results with replicate samples. We measure calibrations to assure the accuracy of the method including initial and continuing calibrations. We use certified reference materials, proficiency test samples, or other measures to verify the testing result obtained with internal calibration materials. We implement procedures to evaluate method capability, such as limit of detection and limit of quantitation or range of applicability such as linearity. Our procedures include selection of appropriate formulae to reduce raw data to final results such as regression analysis, comparison to internal/external standard calculations, and statistical analyses. Method SOP's specify the selection and use of reagents and standards of appropriate quality. C&T QC procedures also include measures to assure constant and consistent test conditions (both instrumental and environmental) where required by the method such as temperature, humidity, light or specific instrument conditions. All quality control measures are assessed and evaluated on an on-going basis and quality control acceptance criteria are used for every test. When it is not apparent which acceptance criteria are appropriate to use, C&T's default criteria is held in the method or regulations employed and/or cited on the test reports.

8.1 Quality Control Acceptance Criteria

Quality control limits and acceptance criteria have been established throughout the laboratory for calibration, accuracy, precision and completeness. Data are reviewed for compliance to these criteria. Specific procedures for establishing control limits are detailed in the QA SOP for generating control limits. Data acceptability is assessed according to the following hierarchy:

1) Site SAP and/or Project/Client specified limits,
2) Internal laboratory limits, and finally;
3) Method prescribed limits.

C&T relies on statistically generated internal QC limits unless contractually required to evaluate data on the basis of a project-specific work plan. Contractually specified criteria are identified in the appropriate QAPP; these requirements are transferred to the departments and may be entered into LIMS utilities used for reviewing data. LIMS, QC Chemists and Project Managers review completed data and reports against the contract requirements.

8.1.1 Establishing Internal Laboratory Control Limits

Control limits are determined, in part, from statistical analyses of the results from replicate analyses of Laboratory Control Samples (LCS), and in part on the basis of acceptance limits established by the marketplace. Control limits are established as benchmarks to evaluate the acceptability of QC data generated by the laboratory. C&T monitors the results of LCS analyses to evaluate trends in precision and accuracy, and to comply with

requirements dictated by its clientele. The laboratory derives control limits from statistical analysis, predictable and communicated needs of its clientele, and the historical ability of the laboratory to meet these limits.

For analysis of metals and organic compounds, method blank and laboratory control sample data are used to establish statistically derived control limits for surrogate and spike recoveries. The recoveries of all spike and surrogate compounds are collected and analyzed automatically by the LIMS. The mean and standard deviation of an array of determinations, for a specific analyte and method, are calculated by a LIMS utility. Control limits are based on the historical mean recovery plus or minus three standard deviations on either side of the mean, as detailed in the laboratory SOP for generating control limits.

For analysis of many inorganic parameters, control limits are based on method-specified limits and on limits specified by C&T's clientele.

The QA Director is responsible for the generating, updating, and maintaining internal laboratory control limits. The LIMS System Administrator is responsible for maintaining the automated utilities for data collection, statistical evaluation, tabulation and updating limits (for "filter" programs) within the LIMS.

C&T policy for quality control consists of a tri-level assessment system, each level with its own set of quality control measurements. The three levels are 1) the instrument, 2) the analytical batch, and 3) sample specific quality assessment. The following explains:.

8.1.2 Out of Control Data

Measurement data are considered out of control when the data exceed applicable QC limits. Corrective actions for out of control data vary by method. Out-of-control data for many methods are automatically identified by the LIMS system through QC "filters". Out-of-control events are also identified during data review by analysts, Group Leaders, Department Managers, Project Managers, QC Chemists, or the QA Director.

8.1.3 Control Charts

C&T relies on automated LIMS utilities to perform statistical evaluations and identify trends and out of control events. The LIMS automatically collects QC sample results, performs statistical reductions and develops the appropriate control limits. C&T staff has access to these limit data through LIMS and they are displayed in tabular form with results of statistical analyses. Control charts can be generated from LIMS data using spreadsheet programs. Out of control event reports can also be generated automatically by the LIMS.

8.2 Instrument Calibration Criteria

C&T demonstrates its measurement systems are in working order by requiring data to pass calibration acceptance criteria. Similar measurements are made to assess the ability of the instrument system to produce data of acceptable quality.

8.2.1 Initial Calibration Criteria

Instruments are calibrated using traceable standard reference materials. Specific performance criteria for linearity, or curve, response factors and similar measurements are

established for each analysis. Examples of the calibration equations appropriate to the analysis and data acquisition software are included in the analytical SOPs.

After meeting initial calibration criteria, a “second source standard” is analyzed at a mid-level concentration to complete an Initial Calibration Verification to ensure that the standards used to calibrate the instrument were reasonably accurate.

8.2.2 Continuing Calibration Verification (CCV)

After initial Calibration is complete and verified, sample analysis can begin. For most methods, a specific number of samples can be analyzed followed by a CCV that demonstrates the instrument is performing within calibration acceptance criteria. An instrument blank analyzed to demonstrate that the instrument is free of “carry-over” or contamination is also part of continuing calibration procedures. These events provide the analyst with system performance information and indicate maintenance or re-calibration needs.

8.2.3 Calibration Standards

C&T’s uses its LIMS to document the handling, preparation and verification of calibration standards. Procedures include documenting information on the source, purity, traceability, and preparation of all calibration materials at C&T. The LIMS records and tracks all calibration standards as two types: 1) source standards (SS), and 2) working standards (WS) prepared from source standards which are used for calibrating instruments.

Procedures require documenting the correlation between unique preparations of calibration standards and the electronic records in the database. Full documentation of the preparation of working calibration standards is achieved by linking the intermediate and working standard preparation events to a specific page in a uniquely numbered bound lab benchbook. Scanning certificates of authenticity, traceability and other information into the LIMS allows automatic inclusion of source standard certificates of traceability into reports.

The LIMS calibration standard application allows all calibration standard solutions to be linked to sample analysis and batch QC data through the batch number (described below). Similarly, through LIMS serial numbers (unique number for every event, analysis or calibration run through LIMS), all calibration events are linked to the calibration standard's unique ID #, and to the instruments which were calibrated. The LIMS links the unique ID's of all working standards, spiking solutions and the concentrations, identities, and traceability of the individual components to samples, QC samples and calibration events. C&T analysts can, through the use of LIMS tools, automatically perform the following operations:

- identify and invalidate outdated source & working standards
- perform calibration response factor calculations
- prepare calibration reports and statistical evaluations
- calculate surrogate/tracer recoveries
- calculate spike/duplicate recoveries & precision data
- prepare calibration standard ID reports for data packages
- track calibration performance of instruments

The calibration standards application requires the date received for all source standards to be recorded and assigns an expiration date based on an assigned shelf-life for that standard. The preparation date for all working and intermediate standards is similarly

required by the system to assign expiration dates on the earlier of the date the source expires, or the date the working standard expires.

The shelf life of source and working standards is determined from technical considerations including solution stability, known chemical degradation rates and pathways, data available in chemical references (i.e. Merck Index, CRC Handbook), storage conditions, and practical experience with the materials. The shelf life is established by Department Managers with the consent and approval of the QA and/or Lab Director. Generally, source standards are stable and can be assigned a life of several years, but no longer than 10 years. The shelf life of all source standards determines the shelf life of the working standards. A working standard expires on the day a source standard for the component expires; working standards cannot outlive the source standards from which they were created.

8.2.4 Criteria used to evaluate calibration events

Initial calibration must be performed whenever instrument conditions have been altered or the daily calibration no longer passes acceptance criteria. Acceptance criteria based on the Relative Standard Deviation (RSD) of the response factors (Rf) or linear correlation coefficient pertaining to each compound of interest is reduced in statistical format. Individual method procedures specify the calibration acceptance criteria and calculations in detail.

For ongoing calibration verification, criteria based on %Difference or %Drift (%D) have been established for Initial Calibration Verification (ICV) and Continuing Calibration Verification (CCV). Individual method procedures specify the calibration acceptance criteria and calculations in detail. Appropriate calculations are defined in each analytical SOP.

8.3 Batch QC

Samples are batched together by matrix and analysis. Distinctions are made based on ***prep batch*** 20 or fewer samples of the same matrix type prepared using the same reagents, standards and procedures in the same time frame, and; an ***instrument batch*** which can be an indeterminate number depending on the method specifications. Each prep batch is processed with method specified QC samples used to assess the performance of the measurement process. C&T's LIMS assigns a unique batch numbers to which all QC samples are linked and compliance criteria are evaluated.

Each batch is required to contain a method blank to assess contamination and prevent false positive results. To assess precision and accuracy, the batch contains a Laboratory Control Sample (LCS). C&T's LIMS system assigns unique QC sample identification numbers, linked to the batch identification for every QC sample processed in the batch.

The following defines the types of QC samples are included. Requirements for specific types of QC samples, their frequency, evaluation criteria, acceptance limits and corrective action criteria are specified in the method procedures (SOP), and in QAPPs submitted by clients. Procedures for preparing and analyzing batch QC samples are discussed in each method SOP.

8.3.1 Laboratory Control Sample (LCS)

An LCS is a matrix-specific blank sample, (e.g. sand for soils/solids and reagent water for liquids) spiked with either a representative or comprehensive selection of the target analyte list(s). The LCS is analyzed in exactly the same manner as the samples in the batch. The

LCS results demonstrate the performance of the measurement system in the absence of matrix effects. LCS results are evaluated by comparing the known sample concentrations with those calculated from the measurement system using percent recovery (%R) calculations. Acceptance criteria are established for minimum and maximum recoveries for each analytical method.

8.3.2 Matrix Spike Samples (MS)
A matrix spike is a field sample to which a known concentration of target analytes has been added. The matrix spike results demonstrate the accuracy of the method in the matrix being analyzed, and are used to demonstrate the presence of matrix affects that compromise or qualify testing results.

8.3.2 Matrix Spike Sample Duplicate (MSD) or Laboratory Control Sample Duplicates (LCSD) MS or LCS duplicate pairs are used to evaluate accuracy and precision of the measurement systems. Precision is evaluated by comparing determined results using Relative Percent Difference (RPD). Acceptance criteria for precision are established statistically setting an RPD range for each test method.

8.3.3 Sample Duplicates
Sample duplicates are used to evaluate the reproducibility (precision) of the method on a given matrix and to gain information on matrix effects. Precision acceptance criteria for duplicates are established based on RPD values.

8.3.4 Quantitative evaluation of precision and accuracy
Precision and accuracy are evaluated by calculation of percent recovery (%R) and Relative Percent Difference (RPD).
The percent recovery of a component is the quotient of the spike result less the sample result (if any) of the component divided by the amount of spike added multiplied by 100.

$$\text{Percent Recovery} = (SSR - SR) / SA \times 100$$

Where SSR = Spiked Sample Results, SR = Sample Result and SA = Spike Added

The Relative Percent Difference (RPD) is the quotient of the first sample result less the second (duplicate) sample result divided by the mean of the results multiplied by 100.

$$RPD = |(R1 - R2)| / ((R1+R2)/2) \times 100$$

Where R1 is the result of the first analysis, and R2 is the result of the duplicate analysis.

Specific mathematical definitions of other calculated QC parameters and data reduction algorithms appear in the SOP's for each measurement method, and are comprehensively addressed in the QA Procedures SOP on calculations.

Acceptance criteria are based on a 99 percent confidence interval, QC parameters do at times fail to meet acceptance criteria. In the event that a particular limit is exceeded, the analyst determines if the failure invalidates the entire batch. The Batch QC Assessment Matrix (Figure 8.2) is used to determine the disposition of the batch.

8.3.5 Method Blanks
Each batch is required to contain a method blank to assess contamination and control false positive results. In the event that a method blank results in a value above the method detection limit, the analyst uses the Method Blank Flowchart (Figure 8.1) to determine the impact on the sample data in the batch.

8.4 Sample Quality Control
In chemical analyses, surrogates target compounds added to each field and QC sample prior to sample preparation provides information on the accuracy of the analysis for each sample. Failure to meet surrogate %R acceptance limits may result in the reanalysis of a single sample, unless obvious matrix interferences are present. Repeated surrogate analysis failures indicate that the sample result may be biased, or that the sample is not amenable to analysis by the method being used. Other sample specific controls include:

- precision between repeat injections,
- internal standard response (where this calibration technique is used),
- interference check standards and samples for AA and ICP measurements,
- post-digestion spikes for AA and ICP analyses,
- Method of standard addition (MSA) analyses

Specific applications of these techniques are described in method SOPs.

8.5 Audits and Scheduled Quality Assessments
In addition to assessing environmental data for precision and accuracy, C&T participates in several types of assessment programs.

8.5.1 Performance Evaluation (PE) Samples
Performance evaluation samples are obtained from third-party, ISO 17043, and/or the TNI PT Standards, Volume 3 approved/compliant sources and are analyzed by C&T. Compliant suppliers are sources of traceable PE/PT samples. The results generated for tests performed treating PE/PT samples as we would process any other sample are reported back to the PE/PT supplier who evaluates C&T's results against the known values, as well as reported results from other laboratories and provides C&T with a performance report. These reports are used to demonstrate comparability of the data produced by C&T with results generated by other laboratories analyzing the same samples. Corrective actions are required for all sample results failing supplier acceptance criteria. Some clients send performance evaluation samples to the laboratory as part of project quality requirements.

8.5.1.1 Internal Quality Control Samples
C&T employs a number of internal QC samples to assess performance of methods, instrument systems, analysts or all of these variables, as well as monitoring the routine performance of Laboratory Control Samples (LCS). The results of these events initiated by the QA Director are tabulated, evaluated and used to improve lab performance.

8.5.2 Internal Audits and Systems Testing
The QA and/or Lab Directors conduct scheduled internal audits in every lab department or group at least once each year. When audit findings cast doubt on the effectiveness of the operations or on the correctness or validity of the results, C&T takes timely corrective action, and will notify customers in writing within 2 weeks after completing our investigations if results may have been affected. Records of internal audits including the area of activity

audited, the records that must be included in the audit, the audit findings and corrective actions that arise are recorded. Follow-up audit activities verify and record the implementation and effectiveness of the corrective action taken. Quality Systems Audits are performed to evaluate the effectiveness and implementation of QC systems. Data quality audits are performed at non-specified frequencies in concert with outside accrediting bodies (Arizona) or clients to assess the quality and integrity of data archived by the laboratory.

8.5.2.1 Quality Systems Audits are performed annually as specified in NELAC and DoD QSM standards and other accrediting bodies. They are designed to evaluate compliance to standards as well as the implementation of quality control systems within each group of the laboratory. Procedures for performing the Quality systems audits including group specific checklists have been developed and appear in QA SOP's. This internal audit is to be performed by the Lab or the QA Director once annually.

8.5.2.2 Data Quality Audits are performed annually in all groups to evaluate the integrity and quality of the data generated and archived by the laboratory. These audits are used to evaluate the integrity and quality of the data generated and archived by the laboratory. Data quality audits involve a full reconstruction of reported results from the lowest level of raw data archived. They are designed to demonstrate compliance to data collection, storage, and archiving procedures. Procedures for performing data quality audits appear in the QA SOP's.

8.5.3 External Audits

External audits are performed by Accrediting bodies (A2LA), US-EPA, state agencies, third party agencies, clients and their contractors. C&T is dedicated to providing information to clients regarding procedures and QA practices.

8.6 Comparability, Representativeness and Completeness

With respect to comparability of data, C&T's in-house control limits and participation in PE samples studies, which compare results among a number of laboratories, demonstrates that the laboratory, given the same sample as another laboratory, can generate comparable data. Representativeness and completeness must be assessed on a project level, against regulatory holding times, field duplicates, and project-specific laboratory QC. Laboratory duplicates provide an indication of the ability of the laboratory to select representative aliquots of the samples provided, but does not provide information regarding the representativeness of the samples taken for a project with respect to the scope of the project. The percentage of data generated by the laboratory for a project that meets all analytical data quality objectives is just one measure of the overall data completeness for a project.

8.7 Method Validation: The implementation of a new analytical method requires a Method Detection Limit study, valid initial and continuing calibration, the compliant analysis of two laboratory control standards (LCS) and at least one PE sample from an outside source that utilizes interlaboratory comparability data. The validation study must documented and on file at the laboratory, associated and supporting raw data shall be filed with the validation report or obtainable in the archive lab records. An SOP has been established.

8.8 Method Detection Limit Studies: Method detection limits (MDL) are determined by SOP to demonstrate the lowest limits of detection for a method including all steps for sample preparation, treatment, extraction/digestion, clean-up, and instrumental analysis procedures. MDL studies are typically performed annually according to 40CFR136, and can be verified by LOD procedures. MDLs are required when significant changes in procedures for sample preparation, cleanup or instrumental analysis are implemented. When the lab has more than one instrumental system with significant differences in responsiveness to the same analytes, the lab establishes MDL's for each instrument.

8.9 Limit of Detection (LOD): The LOD is a value greater than the MDL and less than the LOQ. The LOD is defined as the lowest concentration or amount of the target analyte that can be identified, measured, and reported with confidence that the analyte concentration is not a false positive value at the 99% confidence level. LOD's are determined quarterly.

8.10 Limit of Quantitation (LOQ): The LOQ for analytes of concern is established by SOP and verified quarterly. The LOQ is defined as the lowest concentration level that produces a quantitative result within specified levels of precision and bias. The LOQ is typically the concentration of the lowest initial calibration (ICAL) standard. LOQ does not apply to any component or property for which spiking solutions are not commercially available or otherwise inappropriate, e.g. pH. The LOQ is established by successful analysis of an LCS containing the analyte(s) of concern at no more than twice the concentration(s) of the established LOQ in each applicable matrix, e.g. soil, water, or gasses. A successful LOQ validation analysis is defined by the recoveries of each of the analytes of concern within 50 to 150% of the true value of the spike concentration in the QC samples used.

8.11 Reporting Limits (RL) may be greater than LOQ's as RL's reflect both the lowest level standard of the initial calibration (ICAL) and the reality of possible laboratory contamination, minor variations in the sensitivity of a given instrument, differences between multiple instruments that may be used for an analysis, project specific data quality objectives and performance of a procedure on samples of varying matrices.

Figure 8.1 Method Blank Acceptance Flowchart

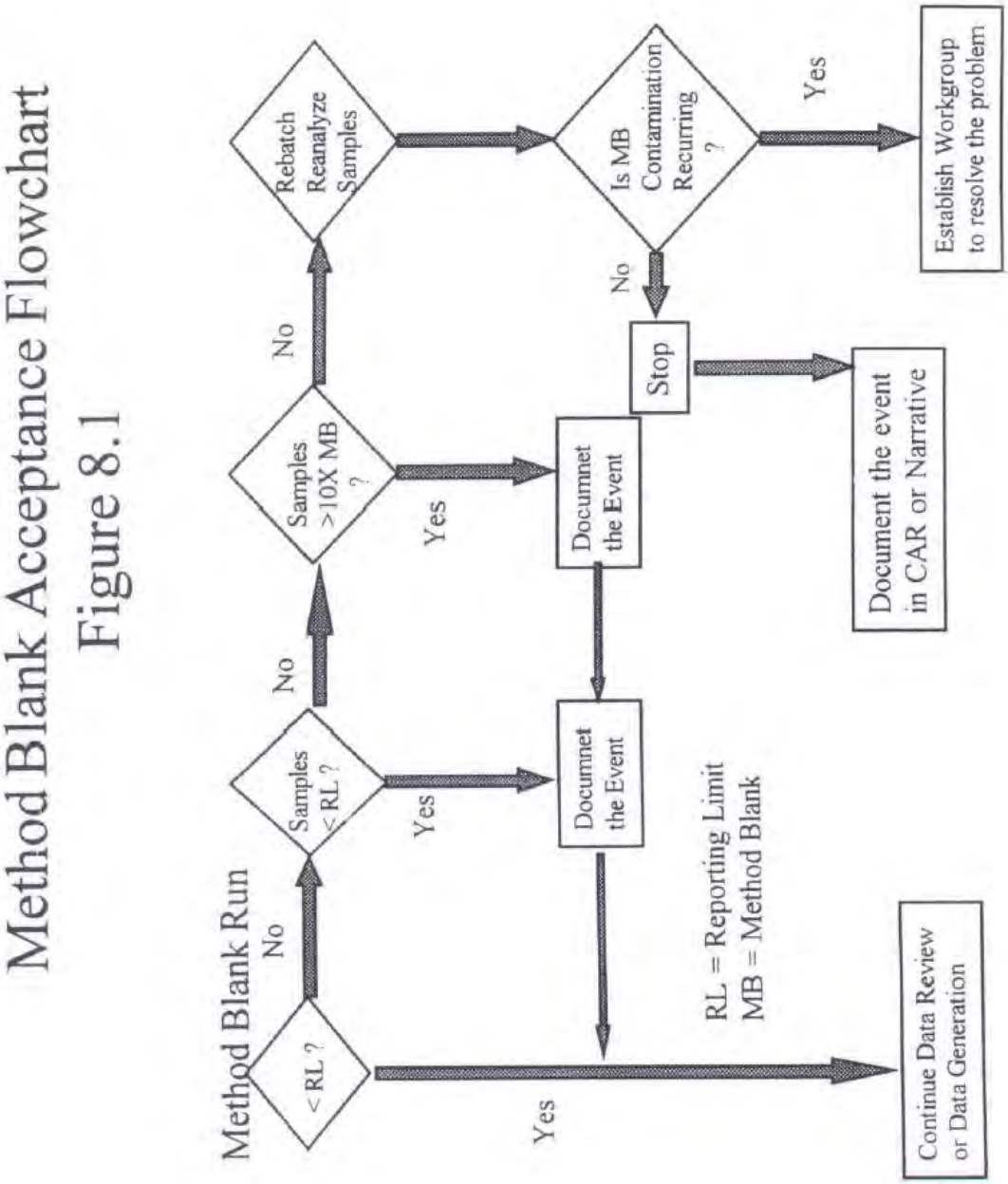

Figure 8.2 Batch QC Acceptance Matrix

BATCH QC ACCEPTANCE MATRIX

+ PASS, - FAIL

CASE	1	2	3	4	5	6	7	8
LCS %REC	+	+	+	+	-	-	-	-
MS, MSD %REC	+	-	+	-	+	-	+	-
MS, MSD %RPD	+	+	-	-	+	+	-	-

LCS %REC: The analyte concentrations in a laboratory control standard (LCS) are determined as a percentage of the known concentration of the analyte(s) in the LCS. Acceptance limits are established for the method and defined in the SOP's.

MS/MSD %REC: The Matrix Spike (MS) and Matrix Spike Duplicate (MSD) %Recovery determinations demonstrate the accuracy of the measurement system on sample matrices. The analyte concentrations in an MS and MSD are determined and compared to limits set in the SOP's for each method as a percentage of the known concentration of the analyte(s) added to the samples.

MS/MSD %RPD: The relative percent difference (RPD) of duplicate recovery measurements from the MS and MSD are determined and compared to limits set for each method as a measurement of the precision of the measurement system.

Evaluations of Batch QC Sample Measurements

- **Case 1:** Batch QC data are acceptable.
- **Case 2:** Batch QC Data is acceptable; matrix effect confirmed.
- **Cases 3 & 4:** Batch QC data are unacceptable. Data are rejected, all samples in the batch must be re-extracted and reanalyzed *unless sample matrix problems are determined and documented.*
- **Case 5:** Batch QC data are unacceptable. Data are rejected, all samples in the batch must be re-extracted and reanalyzed *unless an isolated LCS problem is determined and documented.*
- **Cases 6, 7 & 8:** Batch rejected. Data are rejected; all samples in the batch must be re-extracted and reanalyzed.

9.0 DATA REVIEW & RESULT REPORTING

9.1 Peer Review Process

C&T implements peer and QC Chemist data review programs. These programs are supplemented by Department Manager, and/or Group Leader, review as a training and management tool. Results, whether generated by computer systems or through manual

calculations, are reviewed by a second party to prevent errors from being reported. All reviews are documented through LIMS based review processes. Both the analyst and reviewer must be familiar with the data package requirements for the analysis as outlined in the SOP, and have been designated as a peer reviewer by the Group Leader or Department Manager.

It is the responsibility of the individual performing the activity to secure peer review in a timely fashion. Department Managers are responsible for verifying that data are reviewed in a timely manner; data cannot move to the next step in the process without a review.

9.2 Data Review

C&T's policy is that at least 10% of all data be reviewed by the QA Director or his/her designee(s). The review process includes the following:

- Procedures for data review shall specify which records must be included in the review
- Notes concerning the QC are recorded directly on notes portion of the review app screen these notes can end up in the case narrative section of the report.
- The QC Chemist and/or Supervisory reviewers direct questions concerning the data first to the analyst, and then to the supervisor, as applicable.
- All decisions regarding data quality are documented in LIMS notes fields.
- All QC outliers are documented, with the reason for reporting data outside of limits logically stated.
- Unanswered questions are escalated to Department Managers or Group Leaders
- Peer reviewers are responsible for ensuring that the data are complete
- After peer review the Group Leader, Department Manager, or QC Chemist completes the review process.

9.2.1 Semivolatile and Volatile Organics

Extraction Lab procedures utilize a combination of bound notebooks and LIMS documentation to collect & record data associated with sample preparation. A prep batch report becomes part of the permanent record and follows the extracts through the test processes. GC and GC/MS analyses utilize LIMS sequence files for injection data, quantitation reports, chromatograms, and mass spectra are referenced by batch number. The sample and QC results are reviewed by the analyst before submittal to the Department Manager, or their designee, who reviews and approves the data for transfer to appropriate next steps.

9.2.2 Metals and General Chemistry

The sample preparation (digestion lab) procedures utilize bound benchbooks and LIMS applications to record data. A method number, designation whether ICP OES or MS Spectroscopy (ICP-OES, ICP-MS), Cold Vapor Atomic Absorption (CV-AA) digestion was performed is recorded by batch. Hardcopy records are scanned into LIMS and linked to all samples in the prep batch. The Department Manager, or their designee, performs data review.

Records for metals and other inorganic parameters analyzed using automated instrumentation (ICP-OES, ICP-MS, CVAA, Ion Chromatography, etc.) are maintained in

LIMS sequence files. That are reviewed and initialed by the analyst prior to final review by the Department Manager or their designee.

All records for tests using non-automated general chemistry techniques are maintained in method specific notebooks. Hardcopy records are scanned into LIMS and linked to all samples in the prep and analysis batch(s).

9.2.3 HPS Data Review Procedures

Procedures for the review of data at the HPS lab are the subject of a specific SOP (See Radiation Chemistry SOP's in Appendix 2). Data review is implemented on a tiered system progressing from self and peer-review of data generated by Lab Technicians, and culminating with Lab Supervisor's review. Reports are released to clients after supervisory review.

9.3 Peer Qualifications

Peer reviewers meet specific minimum requirements for training and experience. Department Managers determine when an individual has sufficient knowledge in a particular analysis to perform reviews. Peer reviewers have completed an initial demonstration of capability (IDOC) for the methods they are reviewing and performed the methods for at least 3 months. Familiarity with the appropriate SOP, compendial method, and QC criteria is a requirement. Peers need not currently be assigned to the work group for the data they are reviewing.

9.4 Department Manager Data Review, Reporting and Verification

Department Manager review assures decisions made by analysts of different experience levels are acceptable. This review has two distinct parts:

- The Department Manager or QC Chemist must review all QC outliers that are to be reported. They also write or approve outlier explanations to confirm the decision to report data with QC outliers is acceptable.
- Department Managers or QC Chemists review at least 10 percent of the data generated in the group. This activity ensures continuous management evaluation of training needs and work quality by the members of the group or department.

9.5 Project Management Review

Each project is assigned to a Project or Client Services Manager (PM or CSM) at C&T. The PM and CSM's are the client's primary point of contact with the laboratory and its processes. PM's and CSM's use available LIMS tools and applications to monitor progress of the samples from login, through analysis, review and reporting procedures.

Once a report is complete, PMs and/or CSMs review the report for the following:

- Reasonableness of Data: The data are reviewed as to whether the results reported on various analyses are internally consistent. They compare analyses such as BOD and COD, and the amount of organic contamination reported; general mineral balances; volatile organics measured by different methods; TDS and specific conductivity; and other chemical relationships. They also compare data on samples within the same project file, and if descriptive information about the samples is available, may conclude that the results are reasonable in comparison with each other or known site history. In some instances the Project

Manager will ask the laboratory staff to try to discover the source of a discrepancy. If the discrepancy cannot be resolved the client is informed.

- Acceptability of QA/QC Data: The Project Manager ensures that the QC data are within contract specified acceptance limits and that appropriate explanations are provided by the automated case narrative application.

The Project Manager signs the final report electronically through the LIMS review application, reviews the invoice and generates the EDD as specified in the project notes.

9.6 Quality Assurance Data Review
The Quality Assurance Director is responsible for ensuring all data generated are appropriately reviewed. QC department reviews are intended to verify that laboratory personnel are implementing the laboratory's quality systems and that the data meets method, client, and regulatory requirements.

9.7 New Work Review
The Quality Assurance Director is responsible for reviewing new work to ensure validated procedures, appropriate facilities and sufficient resources necessary to complete the work are in place and ready before commencing such work.

9.8 Review of QAPP's, Tenders, and Contracts
C&T reviews requests, tenders and contracts prior to beginning or accepting new work. The policies and procedures for these reviews leading to a contract for testing and/or calibration ensure that the requirements, including the methods to be used, are adequately defined, documented and understood and; C&T has the capability and resources to meet the requirements; and, the appropriate test and/or calibration method is selected and is capable of meeting the customers' requirements. These activities are usually documented with an exception or acceptance letter after following QAPP review and other review activities are documented in Project Manager and Client Service Representative Notebooks and LIMS project App notes, along with Records of pertinent discussions with a customer relating to the customer's requirements or the results of the work during the period of execution of the contract.

9.9 Reporting the Results
Each test report includes the following information unless arrangement for a simplified report has been made.

1. Title including C&T's Name, Logo and Address
2. C&T's Lab Number, a unique identification number on each page
3. The Customer's Name and Address
4. Identification of the test method(s)
5. Unambiguous identification of the samples or item(s) tested;
6. Dates for receipt of the test samples, sample preparation, and testing
7. Reference to procedures and units of measurement
8. Name(s), function(s) and signature(s) of person(s) authorizing the test report
9. A Case narrative addressing deviations from, additions to, or exclusions from the test method(s) where quality system requirements are not met. A statement(s) of compliance/non-compliance with requirements and/or specifications, including

identification of test results derived from any sample that did not meet sample acceptance requirements such as improper container, holding time, or temperature; and information on specific test conditions, such as environmental conditions and any non-standard conditions that may have affected the quality of results, including the use and definitions of data qualifiers;

a. U – Analyte was not detected and is reported as less than the LOD or as defined by the client.
b. J – The reported result is an estimated value
c. B – Blank contamination.
d. N – Non-target analyte. The analyte is a tentatively identified compound using mass spectrometry.
e. Q – One or more quality control criteria failed

C&T may use additional data qualifiers, and/or different letters or symbols appropriately defined for use consistent with project-specific requirements

10. Other project-specific data reporting requirements, including 1) conventions for reporting results below the LOQ. *Example: Detection limit (DL) = 2, Limit of Detection (LOD) = 4, Limit of Quantitation (LOQ) = 15, sample is undiluted.

    Sample #1: Analytical result: Not detected; Reported result: <4 U
    Sample #2: Analytical result: 2; Reported result: 2 J
    Sample #3: Analytical result: 10; Reported result: 10 J
    Sample #4: Analytical result: 15; Reported result: 15

9.9.1 Test reports containing the results of sampling

Include the following, where necessary for the interpretation of test results

a) the date of sampling;
b) unambiguous identification of the substance, material or product sampled
c) the location of sampling, including any diagrams, sketches or photographs
d) a reference to the sampling plan and procedures used
e) details of any conditions during sampling that may affect the test results
f) any standard or other specification for the sampling method or procedure
g) deviations, additions to, or exclusions from the specification concerned.

9.9.2 Opinions and Interpretations

When opinions and interpretations are included, C&T will document the basis upon which the opinions and interpretations have been made. Opinions and interpretations are clearly indicated as such in a test report.

9.9.3 Testing Obtained from Subcontractors

When a test report contains results of tests performed by subcontractors, these results are clearly identified and C&T makes a copy of the subcontractor's report available to the client when requested by the client.

9.9.4 Electronic Transmission of Results

In the case of transmission of test results by electronic means, all reasonable steps are taken to preserve confidentiality.

9.9.5 Format of Reports
Report formats are designed to accommodate each type of test carried out and to minimize the possibility of misunderstanding or misuse.

9.9.6 Amendments to Test Reports
Material amendments to a test report after issue are made only in the form of a further document, or data transfer, which includes the statement: "Supplement to Test Report, Lab Number" or an equivalent form of wording. When issuing a complete new test report, this is uniquely identified and contains reference to the original report it replaces.

9.9.7 Additional Reporting Issues
C&T will report the following as and if applicable;

- The time of sample preparation and/or analysis if the required holding time for either activity is less than or equal to seventy-two (72) hours.
- Results that are reported on a basis other than "as received" (e. g., dry weight).
- Any non-accredited tests are clearly identified as such to the client when claims of accreditation to a specific standard are made in the report or in the supporting electronic deliverables.
- Clear identification of numerical results with values outside the calibration range.

10.0 DATA STORAGE & DOCUMENT CONTROL
C&T maintains procedures for identification, collection, indexing, access, filing, storage, maintenance and disposal of quality and technical records including reports from internal audits and management reviews as well as records of corrective and preventive actions. Since the laboratory process is almost 100% paperless, the vast majority of lab records stored and maintained by C&T are electronic. Data, reports and other records are archived on computer tape, CD ROM or alternative electronic media. C&T maintains software to access these archival records. Hardcopy of COC and other paper materials submitted by the client are collected, filed, and maintained. Archival storage of data and records in all formats is limited to a period of no less than five years as required by NELAP. All records are stored securely with confidentiality maintained by username and password security. Data may be retained for longer periods of time as requested by the laboratory's clientele. Storage of archival data for more than 5 years requires project or contract specific requirement, written approval of the Lab Director, and/or compensation for storage and cataloging costs.

10.1 Archival Data Storage & Retrieval
Archival data are typically stored on the LIMS as "live" for two years. That is, within two years of the report generation, the lab can generate an automated Level 4 fully defensible report of the data for almost every sample processed in that time frame. After two years, the data may have to be restored onto the LIMS via tape. Software limitations due to superseded applications may prevent automated generation of fully defensible records. Nevertheless with some minimal effort, all data can be retrieved from electronic structures 5 years or more in arrears.

Archived data is maintained at C&T's cost for the use of our clients and stakeholders and they are regarded as the sole property of C&T. Data retrieval is considered a service

provided by C&T to its clients and as such these requests are subject to fees. C&T regards its client relationship protected by attorney client privilege. Accordingly, C&T will not release archival data to any third party without specific written authorization of the client who paid for the data. Subpoenas for records received by C&T will be submitted to the client for their sole action.

10.2 Data Security & Fraud

C&T maintains controls to insure that the ethical practices are implemented at our laboratory. Effective procedures to control for the most common types of laboratory fraud rely primarily upon the individual integrity of the data generator. For this reason, we focus our training and efforts at defeating lab fraud on the individual. The following systemic control procedures have been developed to protect C&T and its clients from incidents of fraudulent data generation practices.

10.2.1 Integration Procedures: Controls for "Peak Shaving"

Peak shaving is defined as the practice of inappropriately manipulating chromatographic peak integrations by lab automation software for the purpose of making what would *obviously* be noncompliant data adhere to specifications. *Peak-shaving* is usually confined to chromatographic peak integrations involving calibrations, surrogate and MS/MSD spike recovery data.

C&T conducts training classes to define appropriate use of manual integration and to clarify C&T policies, work rules and ethical issues involving data manipulation practices; participation in classes is mandatory for all technical staff. The guidelines covered for this practice are outlined below.

Raw data printed for review and filing should contain, to the greatest extent practical, the integration limits and baseline information. C&T's policy is that manual reintegration of CLASS data files is a matter of professional judgment. We allow analysts to manually manipulate and reintegrate data files within defined guidelines using professional judgment. Manual integration, if performed, must follow a pattern of consistency, and results from manually integrated files are so indicated on reports. This guidance refers to the consistent treatment of similar data. For example, continuing calibration files should be integrated in the same fashion as initial calibrations. Surrogates and matrix spiking compounds in samples with similar matrix effects should be consistently integrated.

Any data that is manually integrated must be flagged as such by the data acquisition software and indicated on the final report. It is not permissible to alter, by deletion, the chromatogram or the data flags. It is not permissible to change the data file to the extent that it does not conform to the definition of raw data. It is not permissible to delete peaks or "alter the picture" by deletion.

Unacceptable file manipulation is defined as an obvious manipulation of the chromatographic data for the purposes of obtaining a compliant result, when that result could clearly and only be obtained by an inappropriate manipulation of the data.

The SOP shall specify parameters for integration and conditions for manual modification of automatic integrator presets. The SOP shall detail the flagging conventions used by the data reduction software to indicate that a manual integration was performed. Allowable

manual reintegration for the sole purpose of improving the QC compliance data, and only for this reason, is not permissible.

10.2.2 "Time Travel" Controls

Time travel is the practice of turning off a LAS or instrument control computer, resetting the date/time clock and performing an analysis at an erroneous date & time, for the purpose of meeting data quality objectives, usually holding time for samples.

The primary systemic control mechanism for time travel rests with two, and if needed three, separate timekeeping systems in the data collection process. The LIMS data collection systems are designed in a manner such that time travel cannot occur as a result of one person acting alone. The primary clock for data-logging at each C&T facility shall be the LIMS server clock. Lab Automation System clocks (i.e. Agilent Chemstation) are secondary clocks. Tertiary clocks are instrument control and acquisition computers or devices (i.e. PC's and terminals). Only authorized individuals will have required system security to set (or reset) the LIMS Server(s) system clock. In this system both the LIMS clock and the data acquisition or LAS clock must be set to within plus or minus 30 minutes of the same time, requiring two people to conspire with one person having very high system security clearance.

10.3 Distribution and Document Control Procedures

C&T has a system of controls for documents to insure that current documents are in use, and that superseded documents are archive appropriately. The following documents are relevant to the Quality Assurance Program, and procedures for dealing with them are appropriately addressed here:

- QA Program Manual
- Standard Operating Procedures

Standard Operating Procedures are in place for the procedures for updating these documents.

All documents issued to personnel in the laboratory as part of the quality system shall be reviewed and approved for use by authorized personnel prior to issue. The document management system is LIMS-based and, due to electronic publication procedures implemented, ensures authorized editions of appropriate documents are available at all locations where operations essential to the effective functioning of the laboratory are performed. Documents that are part of the quality system documents are periodically reviewed and, where necessary, revised to ensure continuing suitability and compliance with applicable requirements. Using C&T's LIMS based system for document control, Invalid or obsolete documents are promptly removed from the LIMS and thus from all points of use, and are otherwise assured against unintended use.

Quality system documents generated by the laboratory shall be uniquely identified including the date of issue and/or revision identification, page numbering, the total number of pages or a mark to signify the end of the document, and the issuing authority(s).

Changes to documents shall be reviewed and approved by the same function that performed the original review unless specifically designated otherwise. The designated personnel shall have access to pertinent background information upon which to base their review and approval.

10.3.1 QA Program Manual
The QA Program Manual is reviewed and revised annually, at minimum. The Lab Director is responsible for completing the review and revision, the QA Director is responsible for implementing the procedures, for distribution of current versions, and replacing and archiving obsolete versions. The following addresses specific procedures applicable to the QA Program manual.

10.3.1.1 Controlled versions of the QA Manual
One controlled version of the QA Manual will be printed in hardcopy format. No other copies of the QA Manual may be made from the original, and thus all hardcopies of the QA manual that do not bear original signatures are uncontrolled. A controlled *electronic* copy of the QA Manual is available to every analyst in the lab via the LIMS through the main menu.

If a client requests a copy of C&T's QAM only uncontrolled electronic or hardcopy can be provided. No controlled hardcopies of the QAM are available

10.3.1.2 QAM Revision/ replacement
When a QA Manual is superseded with a new revision, the original controlled hardcopy copy is placed in archives. An electronic copy of the outdated version will be transferred to electronic archive files in LIMS. Each employee is aware of the issuance of a new revision of the manual and its availability on LIMS.

10.3.1.3 QAM Expiration
C&T QA Manuals expire one year after the revision date.

10.3.1.4 QAM Revision Frequency
The QA Program Manual shall be revised annually. The Lab and QA Director shall be responsible for preparing modifying, production and approval of the manual each year.

10.3.1.5 Distribution
Distribution of the current version of the QA Manual is the responsibility of the QA Director. The QA Director is responsible to print the one controlled hardcopy and to post the new revision on the LIMS, and archive the original hard and electronic copies.

10.4 Standard Operating Procedures (SOPs)
SOPs are developed, revised, reviewed, approved, distributed and controlled according to the requirements specified by NELAP, DoD and DoE Quality Systems Manuals, as outlined below. The SOP's shall clearly indicate the time period for which they are effective. The QA Director is responsible for implementing the SOP document control and revision procedures.

10.4.1 Format
The format for SOP's is specified in the NELAP Quality Systems Standard, Chapter 5, Section 5.4.1 and each SOP for analytical methods contains the following elements:

- *Title and Signature Page*: Title, appropriate revision number, the date the document became effective, a unique identification (consisting of the volume

and section numbers), revision number, approval signatures, and signatures of qualified analysts.

- *Header Information*: A header must appear on each page of the SOP and must contain the following information in this order:

SOP Volume:	the book where the printed SOP's are stored
Section Number:	assigned using the C&T SOP Table of Contents
Page Number:	(e.g., 1 of 4, etc.)
Revision Number:	whole numbers, beginning with 0 for new SOP's
Effective Date:	date the revision supersedes the previous version
Filename:	describes where the SOP resides in the LIMS

- *Scope*: Briefly (one or two sentences) describe the purpose of the SOP. For analytical SOPs it is appropriate to include applicable matrices and reporting limits.
- *References:* Cite the compendial methods used in generating the SOP.
- *Sample preservation & regulatory holding time*.
- *Modifications:* List deviations from the reference method.
- *Safety*: List any special safety requirements or concerns that may be encountered in the performance of the procedure.
- *QC Requirements:* List the QC requirements of the method (e.g. method blank, LCS, matrix spike, calibration, etc.) and applicable corrective actions.
- Interferences: A brief discussion of potential sources of high or low bias.
- *Procedure:* The steps required to perform the analysis, including calibration, sample preparation (may be included by reference to a separate SOP), typical instrument settings & conditions, reagents, standards, and example equations used to calculate sample and batch QC results.
- *Pollution Prevention & Waste Disposal.*
- *Revision History*

10.4.2 Review, approval, and implementation

Typically, SOP's are reviewed by the individual responsible for implementing the procedure and approved the responsible individual's supervisor and the Quality Assurance and or Lab Directors or their designees. Changes to SOP and other procedural documents shall be reviewed and approved by the Department Manager or Group Leader that performed the review or who is responsible for supervising those who perform the test.

The SOP must be approved, signed, and dated by the Department Manager and the QA Director (or designees in their absence). The SOP must include the date that the revised procedure supersedes the outdated version.

10.4.3 Document control

All SOPs are controlled via electronic means, only those SOP's available on LIMS are current, all others are considered obsolete. A hardcopy of the SOP may be maintained in appropriate Workstation Notebook(s) these copies are allowed to have hand written amendments, such amendments shall be defined, marked, initialed and dated. A revised document shall be formally re-issued as soon as practicable. Hand written amendments to documents shall be approved by the individual revising the document and recorded in the revision summary section of the document applicable to the new/revised electronic version.

Controlled electronic SOP's are posted to LIMS with signature page. When superseded by a revision, the outdated SOP will be archived by the QA Director, the revisions to the SOP are saved in a DRAFT file with red ink/font used for changed text. Department Managers and Group Leaders are responsible to replace or destroy any uncontrolled or outdated hardcopy SOP's that may reside in the workstation notebooks.

10.4.4. Electronic storage and revision control
Procedures have been established for how changes in documents maintained electronically are made and controlled. All SOP's are created, edited, revised and stored in Adobe pdf or MS-Word formats on the LIMS. These SOP files are security password protected. The QA and Lab Directors are the only persons authorized to possess the password, and to modify these files. SOP's in electronic format can be accessed at any LIMS terminal in the lab through the LIMS Main Page menu in "read only" mode. SOP's posted on the LIMS are available at every LIMS terminal and are accessible at the lowest level of security clearance. SOP's on LIMS have been modified to disable printing and changes.

10.4.5 Schedule for revision
SOP's for analytical procedures are scheduled for review and re-issue annually. All other SOP's will be updated as needed, with the objective of updating annually. The Lab and QA Directors are responsible for ensuring the revision process is implemented.

10.5 Policy on Signatures, Initials, Electronic Signatures and Work Approvals
C&T policy is that all electronic signatures and work approvals used in LIMS require unique username and password required for secure login to its LIMS. In this way C&T employees are identified when they approve work for completion and "sign" reports establishing audit trails and a means for reconstructing work performed. Procedures have been established for true hardcopy signatures on SOP's and policy documents such as this QAM. C&T will maintain a list of analyst's names and their initials that will be updated annually. Project Managers, Client Service Representatives, Lab and QA Directors, and Department managers are authorized to sign reports electronically.

11.0 CORRECTIVE ACTION PROCESS

An effective Quality Assurance program requires rapid, effective and thorough identification and correction of issues and errors that affect data quality. Timely and effective action minimizes the possibility of producing data of unknown or insufficient quality. The Laboratory Director and the QA Director, with the cooperation of the entire lab staff initiate and complete corrective actions for problems that affect data or service quality.

Once a situation has been identified as producing marginal, nonconforming, or non-compliant data; the root cause of the problem must be identified. Corrective action requires defined responsibilities for scheduling, performing, documenting, and demonstrating the effectiveness of the action. It is the responsibility of the appropriate Department Manager to work with the QA Director to develop a plausible corrective action plan. The plan is tested, if possible, to determine whether the action results in the production of compliant data by eliminating the problem. If the out of control event cannot

be resolved samples will be reanalyzed, if possible, with acceptable quality assurance results.

The goal of the corrective action process is to identify and permanently correct situations that lead to generation of errors in the measurement process. The documentation component is implemented to record the samples affected by the situation, and as a managerial tool to facilitate correcting the errors in a timely manner.

The entire corrective action documentation process is LIMS based. A Corrective Action Report (CAR) is generated to initiate and document corrective action plans and activities. Any member of the C&T staff may initiate a CAR.

Data are not generated in a situation where questions concerning the data quality may exist unless the client has been informed of the situation and has dictated that course of action. The QA Director has the authority and responsibility to require any activities that could compromise or have compromised data quality objectives to be discontinued or limited until corrective action is complete and quality is no longer compromised.

11.1 Corrective Actions for Sample Analyses & Related Activities

For all organic and most inorganic analyses, the LIMS automatically identifies surrogate, spike, and calibration failures. Corrective action must be initiated when blank spike recoveries or %RPD, calibration response factors, sample loss, or other method-specific QC procedures or criteria cannot be met by the analysis. For matrix spikes or duplicates, the LIMS system FAIL notifications and case narratives may serve as corrective action notices.

11.2 Corrective Action Report

If corrective actions can be completed within 48 hours without impacting data quality, a notice need not be initiated, otherwise a Corrective Action Report (CAR) must be initiated within 48 hours of detecting the out of control event. CARs must be initiated by the analyst, or by the reviewer who identifies the mistake; these reports are then automatically e-mailed from the LIMS to the Department Manager, Project Manager, QA Director, and Operations Manager. The corrective action notices are serially numbered and available through the LIMS and linked to appropriate lab numbers.

11.3 When Sample Analyses Cannot Meet Acceptance Criteria

If corrective action cannot resolve an out of control sample analysis, and results of sample analysis are affected, the Department Manager must notify the Quality Assurance Director. If in the QA Director's judgment, results of sample analysis are affected, a summary of out of control QA procedures must be communicated to the client with the results of the affected analyses. The process outlined below for correcting systems must be initiated.

In many instances, methods and procedures designed for a wide variety of sample matrices do not and/or cannot be completed to meet acceptance criteria. Typical examples of these conditions are matrix effects that prevent the achievement of surrogate recoveries, and matrix spiking accuracy and/or precision criteria. Data reported from testing activities that do not meet acceptance criteria must be flagged, annotated or otherwise qualified to the client receiving the data. Every effort must be made to clearly identify the reason the

acceptance criteria could not be met and to report efforts made by C&T to achieve compliant results. Case narratives and flags or footnotes on certificates of analyses are acceptable means of informing clients of analyses that could not be performed to meet established performance criteria.

11.4 Corrective Action for Systemic Errors

C&T has developed and implemented a process to identify and correct recurring errors, and those that arise from system design or implementation processes. It is the QA Director's responsibility to manage and document the process.

1. Identify the problem, root cause, and conditions leading to the problem, as briefly and clearly as possible.
2. Identify a responsible person, or team of people, who can be held accountable for the outcome of the corrective action. Select an individual(s) who is responsible and able by authority or ability to achieve the results desired.
3. With the input, feedback and general agreement of the responsible individual or task force, the QA Director will develop a written outline of what lab processes are affected and what actions needs to be taken.
4. Identify all steps which must be taken immediately and proceed with alacrity.
5. Set corrective action goals in writing, with the following criteria addressed:
   Responsible Party: One person who will be responsible for completing the task or realizing the goal
   Timetable: A date when the action will be completed
   Completed Specifications: What a corrected situation looks like
   Priority: Where does this goal/task fit in with other tasks and responsibilities addressed by the responsible party?

11.5 Filing & Tracking Corrective Actions

The laboratory has established a LIMS based electronic system for documenting the efforts and results of the CAR system as outlined above. Copies of the completed corrective action reports are linked to the project file and lab numbers of affected samples and records are accessible through the LIMS. C&T is in the process of implementing its LIMS at the HPS lab and is in transition between a paper based CAR system and C&T's LIMS based system at the time this revision was issued.

11.6 Reviewing Corrective Actions

The Lab Director will periodically review corrective action files and efforts. Corrective actions are subject to progress/completion checks during internal audits.

12.0 QUALITY ASSURANCE REPORTING & RECORDS

In accordance with a predetermined schedule and procedure, C&T's top management periodically conducts reviews of the laboratory's management system and testing activities to ensure their continuing suitability and effectiveness, and to introduce necessary changes or improvements. The QA Director maintains records to furnish evidence of the day-to-day activities affecting quality in accordance with the requirements of this QA Manual. The Lab and QA Director prepare reports

All QA program records and data files are securely maintained insuring that only authorized personnel have access to them. Records are periodically archived according to procedures that maintain access control, and retrieval.

12.1 Monthly QA Activity Reports

The QA Director prepares monthly QA activity reports based on the results of internal and external audits, deficiencies and problems identified throughout the period, action items, and results of monitoring efforts, procedural issues that have affected quality results, past due corrective actions, if relevant or applicable as well as objectives accomplished and not related to QA program activities.
Monthly QA reports include Status and results of internal and external audits and approvals; Results of internal and external proficiency testing; Staff training and qualification; Method Development & Instrumentation; Software/LIMS Development; QA/QC problems, Corrective/Preventative actions; QA Program initiatives & changes; Facilities Issues; Suitability of Policies and Procedures; Management of Lab; and
Client feedback and complaints:

12.2 Annual Management Review of QA

Once a year C&T's lab director reviews the QA program and prepares a report to ensure the continual effectiveness of C&T's QA Program. *The review takes account of the following:*

- the suitability of policies and procedures;
- reports from managerial and supervisory personnel;
- the outcome of recent internal audits;
- corrective and preventive actions;
- assessments by external bodies;
- the results of inter-laboratory comparisons or proficiency tests;
- changes in the volume and type of the work;
- customer feedback & complaints;
- recommendations for improvement;
- other relevant factors, such as quality control activities, resources, staffing and staff training.

Results of the annual management review feeds into laboratory planning and can include goals, objectives, and action plans for the coming year. The management review also includes consideration of related subjects discussed at regular management meetings. Findings from the review and the actions that arise from them are recorded in the annual review/report.

Findings from monthly reports and management reviews and the actions that arise from them are recorded in QA reporting files. C&T's management ensures that the decisions and actions contained in the reports are carried out. C&T has established procedures for management reviews and the documentation and maintenance of review findings and actions.

12.3 Reports on Data Integrity Investigations

All investigations resulting from data integrity issues are conducted in a confidential manner until they are completed. The results of all data integrity investigations are presented in a report to the lab director when not authored by him/her. All clients shall be notified of the

results of data affected by data integrity issues.

12.4 QA Recordkeeping

Documenting the implementation of C&T's QA program is a significant undertaking requiring skills in filing and document retrieval. The QA Director is responsible for filing documentation supporting QA Program activities. Filing systems for the following reports, documents, events and activities are the responsibility of the QA Director.

- Corrective Actions
- Method validation files
- MDL Studies
- Control Charts and Control Limit determinations
- Standard Operating Procedures (SOPs)
- Benchbooks, Sample & Standard Prep Logs, Instrument Logs and other bound notebooks
- Training files and participation records
- Results of performance testing & evaluation samples
- Audits results and follow-up
- Certification applications and approvals

APPENDIX_1: Containers, Preservation & Holding Times

(Client Services SOP 3.1)

ORGANICS	Matrix	Prep Method	Analytical Method	Holding Time[5]	Minimum Volume	Water Sampling Container	Water Sampling Preservative[7]
TPH/Diesel [3]	Water	EPA 3520	EPA 8015	14d[11]/ 40d[6]	500 mL	2 x 500mL G	None
	Soil	CA LUFT[4]	EPA 8015	14d/ 40d[6]	50 g		
		EPA 3550	EPA 8015	14d/ 40d[6]	50 g		
TPH/Gasoline [2]	Water	EPA 5030	EPA 8015	14 days	40 mL	3 x 40mL VOA	HCL[8]
		EPA 5030	8260mod	14 days	40 mL	3 x 40mL VOA	HCL[8]
	Soil	EPA 5035[8]	EPA 8015	14 days	5 g		
		EPA 5035[8]	EPA 8015	7 days	5 g		Frozen
Alcohols (Methanol, Ethanol)	Water	Direct Inject	EPA 8015	14 days	40 mL	2 x 40mL VOA	None
BTXE [1]	Water	EPA 5030	EPA 8021	14 days	40 mL	3 x 40mL VOA	HCL[8]
	Soil	EPA 5035[8]	EPA 8021	14 days	5 g		
Carbon Dioxide (dissolved)	Water	METHOD[4]	RSK-175	14 days	40 mL	3 x 20mL vial	None
Creosote, coal tar	Water	EPA 3520	EPA 8270	7d/ 40d[6]	1 L	1L G	None[8]
	Soil	EPA 3550	EPA 8270	14d/ 40d[6]	30 g		
1,4-Dioxane	Water	EPA 3520	8270-SIM	7d/ 40d[6]	1 L	1L G	None[8]
	Soil	EPA 3550	8270-SIM	14d/ 40d[6]	30 g		
Dioxins & Furans	Water	METHOD[4]	EPA 8280	30d/ 45[6]	1 L	1L G	None[8]
	Soil	METHOD[4]	EPA 8280	30d/ 45d[6]	10 g		
Dioxins & Furans (Low Concentration)	Water	METHOD[4]	EPA 8290	30d/ 45d[6]	1 L	1L G	None[8]
	Soil	METHOD[4]	EPA 8290	30d/ 45d[6]	10 g		
Dissolved Gasses (except CO_2)	Water	METHOD[4]	RSK-175	14 days	40 mL	3 x 40mL VOA	HCL
Dissolved Gasses (CO_2)	Water	METHOD[4]	RSK-175	14 days	40 mL	3 x 40mL VOA	None
Explosives (Nitroaromatics & Nitramines)	Water	EPA 3535	EPA 8330	7d/ 40d[6]	1 L	1L G	None[8]
	Soil	METHOD[4]	EPA 8330	14d/ 40d[6]	10 g		
Gasoline Oxygenates	Water	EPA 5030	EPA 8260	14 days	40 mL	3 x 40mL VOA	HCL[8]

ORGANICS	Matrix	Prep Method	Analytical Method	Holding Time[5]	Minimum Volume	Water Sampling Container	Water Sampling Preservative[7]
	Soil	EPA 5035[8]	EPA 8260	14 days	5 g		
Halogenated VOCs (old 8010 list)	Water	EPA 5030	EPA 8260	14 days	40 mL	3 x 40mL VOA	HCL[8]
	Soil	EPA 5035[8]	EPA 8260	14 days	5 g		
MTBE (Methyl tert-Butyl Ether)	Water	EPA 5030	EPA 8021	14 days	40 mL	3 x 40mL VOA	HCL[8]
		EPA 5030	EPA 8260	14 days	40 mL	3 x 40mL VOA	HCL[8]
	Soil	EPA 5035[9]	EPA 8021	14 days	5 g		
		EPA 5035[9]	EPA 8260	14 days	5 g		
Nitroaromatics & Nitramines (Explosives)	Water	EPA 3535	EPA 8330	7d/ 40d[6]	1 L	1L G	None[8]
	Soil	METHOD[4]	EPA 8330	14d/ 40d[6]	10 g		
Organochlorine Herbicides	Water	METHOD[4]	EPA 8151	7d/ 40d[6]	1 L	1L G	None
	TCLP Leachate	EPA 3520	EPA 8270	7d/ 40d[6]	1 L	1L G	None
	Soil	METHOD[4]	EPA 8151	14d/ 40d[6]	30 g		
Organochlorine Pesticides	Water	EPA 3520	EPA 8081	7d/ 40d[6]	1 L	1L G	None
		EPA 608	EPA 608	7d/ 40d[6]	1 L	1L G	None
	TCLP Leachate	EPA 3520	EPA 8270	7d/ 40d[6]	1 L	1L G	None
	Soil	EPA 3550	EPA 8081	14d/ 40d[6]	30 g		
		EPA 3545	EPA 8081	14d/ 40d[6]	15 g		
PCBs (Polychlorinated Biphenyl)	Water	EPA 3520	EPA 8082	7d/ 40d[6]	1 L	1L G	None
		EPA 608	EPA 608	7d/ 40d[6]	1 L	1L G	None
	TCLP Leachate	EPA 3520	EPA 8270	7d/ 40d[6]	1 L	1L G	None
	Soil	EPA 3550	EPA 8082	14d/ 40d[6]	30 g		
		EPA 3545	EPA 8082	14d/ 40d[6]	15 g		
PCB Congeners	Water	EPA 3520	EPA 8082	7d/ 40d[6]	1 L	1L G	None
	Soil	EPA 3550	EPA 8082	14d/ 40d[6]	30 g		
		EPA 3545	EPA 8082	14d/ 40d[6]	15 g		
Pentachlorophenol	Water	EPA 3520	EPA 8270	7d/ 40d[6]	1 L	1L G	None[8]
	Soil	EPA 3550	EPA 8270	14d/ 40d[6]	30 g		
Phenols (including cresols)	Water	EPA 3520	EPA 8270	7d/ 40d[6]	1 L	1L G	None[8]

ORGANICS	Matrix	Prep Method	Analytical Method	Holding Time[5]	Minimum Volume	Water Sampling Container	Water Sampling Preservative[7]
	Soil	EPA 3550	EPA 8270	14d/ 40d[6]	30 g		
Phthalates	Water	EPA 3520	EPA 8270	7d/ 40d[6]	1 L	1L G	None[8]
	Soil	EPA 3550	EPA 8270	14d/ 40d[6]	30 g		
Polynuclear Aromatic Hydrocarbons	Water	EPA 3520	EPA 8270	7d/ 40d[6]	1 L	1L G	None[8]
		EPA 3520	8270-SIM	7d/ 40d[6]	1 L	1L G	None[8]
		EPA 3520	EPA 8310	7d/ 40d[6]	1 L	1L G	None[8]
	Soil	EPA 3550	EPA 8270	14d/ 40d[6]	30 g		
		EPA 3550	8270-SIM	14d/ 40d[6]	30 g		
		EPA 3550	EPA 8310	14d/ 40d[6]	30 g		
Semivolatile Organics	Water	EPA 3520	EPA 8270	7d/ 40d[6]	1 L	1L G	None[8]
		EPA 625	EPA 625	7d/ 40d[6]	1 L	1L G	None[8]
	TCLP Leachate	EPA 3520	EPA 8270	7d/ 40d[6]	1 L	1L G	None
	Soil	EPA 3550	EPA 8270	14d/ 40d[6]	30 g		
TCLP Extraction for Semivolatiles	Soil	EPA 1311	Various	14 days	100 g[10]		
TCLP-ZHE Extraction for Volatiles	Soil	EPA 1311	Various	14 days	25 g		
Volatile Organics	Water	EPA 5030	EPA 8260	14 days	40 mL	3 x 40mL VOA	HCL[8]
		EPA 624	EPA 624	14 days	40 mL	3 x 40mL VOA	HCL[8]
	TCLP Leachate	EPA 5030	EPA 8260	14 days	40 mL		None
	Soil	EPA 5035[8]	EPA 8260	14 days	5 g		
		EPA 5035[8]	EPA 8260	7 days	5 g		Frozen

Notes:

1. Benzene, Toluene, Ethylbenzene, and Xylenes; MTBE (Methyl tert-Butyl Ether) may be added upon request.
2. Total Petroleum Hydrocarbons as Gasoline: JP-4, Aviation Gas, Mineral spirits, or Stoddard solvent may be added upon request. Reporting limits may be higher for fuels other than gasoline.
3. Total Petroleum Hydrocarbons as Diesel; motor oil, commercial jet fuel, JP-5, hydraulic oil, or Bunker C fuel oil May be added upon request. Reporting limits may be higher for fuels other than diesel.
4. CA LUFT: California Department of Health Services Leaking Underground Fuel Tank Manual 1989

Legend:

mg/L	milligrams per liter (ppm)
µg/L	micrograms per liter (ppb)
mg/Kg	milligrams per kilogram (ppm)
µg/Kg	micrograms per kilogram (ppb)
VOA	40mL Amber VOA Vial

ORGANICS	Matrix	Prep Method	Analytical Method	Holding Time[5]	Minimum Volume	Water Sampling Container	Water Sampling Preservative[7]

5. Holding time specified in 40CFR136 Table 2 (Clean Water Act/ NPDES 2012) and SW-846 Table 2-36 (1996)
6. X / Y: X days from sample collection to extraction, then Y days from extraction to analysis.
7. Samples should be kept at $\leq 6^0$C from time of collection until analysis. Containers can be supplied by C&T.

   HCL: Hydrochloric Acid to pH < 2

   ZnAc: Zinc Acetate
8. Free chlorine should be neutralized with 0.008% $Na_2S_2O_3$ at time of sampling.
9. Prep method EPA 5035 using Encore or similar sampling devices should be used for collecting soil. Three aliquots of each sample should be submitted for analysis. Samples should be frozen or chemically preserved within 48 hours of collection. Freezing extends the holding time to 7 days; chemical preservation extends the holding time to 14 days but may create matrix interferences.
10. 100g minimum for TCLP Extraction; 50g required for each analysis.
11. California LUFT Manual allows a 14 day holding time for extraction of TPH-Diesel/Motor Oil from water samples, however for projects located outside California (or associated with a Federal or Department of Defense project), the holding time is 7 days.

G Amber Glass

P Polyethylene

Vial 20mL Amber RSK Vial

TRACE METALS	Matrix	Prep Method	Analytical Method	Holding Time[2]	Minimum Volume	Water Sampling Container	Water Sampling Preservative[3]
Cations	Water	EPA 3010	EPA 6010	6 mo	100 mL	250mL P	HNO_3
		EPA 200.7	EPA 200.7	6 mo	100 mL	250mL P	HNO_3
		EPA 200.8	EPA 6020	6 mo	100 mL	250mL P	HNO_3
		EPA 200.8	EPA 200.8	6 mo	100 mL	250mL P	HNO_3
	Soil	EPA 3050	EPA 6010	6 mo	2 g		
		EPA 3050	EPA 6020	6 mo	2 g		
ICP Metals	Water	EPA 3010	EPA 6010	6 mo	100 mL	250mL P	HNO_3
		EPA 200.7	EPA 200.7	6 mo	100 mL	250mL P	HNO_3
	Soil	EPA 3050	EPA 6010	6 mo	2 g		
ICP-MS Metals	Water	EPA 200.8	EPA 6020	6 mo	100 mL	250mL P	HNO_3

TRACE METALS	Matrix	Prep Method	Analytical Method	Holding Time[2]	Minimum Volume	Water Sampling Container	Water Sampling Preservative[3]
		EPA 200.8	EPA 200.8	6 mo	100 mL	250mL P	HNO_3
	Soil	EPA 3050	EPA 6020	6 mo	2 g		
Hexavalent Chromium	Water	METHOD[1]	EPA 7196A	24 hr	100 mL	500 mL P	None
		METHOD[1]	EPA 7199	24 hr	50 mL	250 mL P	None
	Soil	METHOD[1]	EPA 7196A	30 days	40 g		
Lead	Water	EPA 3010	EPA 6010	6 mo	100 mL	250mL P	HNO_3
		EPA 200.7	EPA 200.7	6 mo	100 mL	250mL P	HNO_3
		EPA 200.8	EPA 6020	6 mo	100 mL	250mL P	HNO_3
		EPA 200.8	EPA 200.8	6 mo	100 mL	250mL P	HNO_3
	Soil	EPA 3050	EPA 6010	6 mo	2 g		
		EPA 3050	EPA 6020	6 mo	2 g		
Lead in High Volume Air Filters	Air	METHOD[1]	EPA 7420	NS	Varies		
Mercury	Water	METHOD[1]	EPA 7470	28 days	100 mL	250mL P	HNO_3
		METHOD[1]	EPA 245.1	28 days	100 mL	250mL P	HNO_3
	Soil	METHOD[1]	EPA 7471	28 days	0.5 g		
Organic Lead	Water	CA LUFT[1]	CA LUFT[1]	14 days	100 mL	500mL G	None
	Soil	CA LUFT[1]	CA LUFT[1]	14 days	50 g		
Priority Pollutant Metals	Water	EPA 3010/ Method[1]	EPA 6010/ 7470	6 mo/ 28d[4]	100 mL	500mL P	HNO_3
		EPA 200.8/ Method[1]	EPA 6020/ 7470	6 mo/ 28d[4]	100 mL	500mL P	HNO_3
Priority Pollutant Metals	Soil	EPA 3050/ Method[1]	EPA 6010/ 7471	6 mo/ 28d[4]	5 g		
		EPA 3050/ Method[1]	EPA 6020/ 7471	6 mo/ 28d[4]	5 g		
RCRA (8) Metals	Water	EPA 3010/ Method[1]	6010/ 6020/ 7470	6 mo/ 28d[4]	100 mL	500mL P	HNO_3
	Soil	EPA 3050/ Method[1]	6010/ 6020/ 7471	6 mo/ 28d[4]	5 g		
STLC Extraction for CA-W.E.T.	Soil	CCR T22-66261	6010/ 6020/ 7470	6 mo/ 28d[4]	50 g		
SPLP Extraction for Metals	Soil	EPA 1312	6010/ 6020/ 7470	6 mo/ 28d[4]	100 g[5]		
TCLP Extraction for Metals	Soil	EPA 1311	6010/ 6020/ 7470	6 mo/ 28d[4]	100 g[5]		
TCLP Extraction for SVOC	Soil	EPA 1311	Various	14 days	100 g[5]		
TCLP-ZHE Extraction for VOC	Soil	EPA 1311	Various	14 days	25 g		

Curtis & Tompkins, Ltd

TRACE METALS	Matrix	Prep Method	Analytical Method	Holding Time[2]	Minimum Volume	Water Sampling Container	Water Sampling Preservative[3]
CA Title 22 Metals (CAM 17)	Water	EPA 3010/ Method[1]	EPA 6010/ 7400	6 mo/ 28d[4]	100 mL	500mL P	HNO_3
		EPA 200.8/ Method[1]	EPA 6020/ 7400	6 mo/ 28d[4]	100 mL	500mL P	HNO_3
	Soil	EPA 3050/ Method[1]	EPA 6010/ 7400	6 mo/ 28d[4]	5 g		
		EPA 3050/ Method[1]	EPA 6020/ 7400	6 mo/ 28d[4]	5 g		
Tributyl Tin ("Organotin")	Water	EPA 3520	GC/ FPD	NS	1 L	1L G	None
	Soil	EPA 3550	GC/ FPD	NS	10 g		

Notes:

1. "Method" indicates that the prep method is an integral part of the referenced analytical method.
   "NS" indicates that no holding time is specified in the regulations.
2. Holding time specified in 40CFR136 Table 2 (Clean Water Act/ NPDES 2012) and SW-846 Table 2-36 (1996)
   Requires submission of two polyethylene bottles, one preserved with HCl and one with HNO_3.
3. Samples should be kept at $\leq 6^0$C from time of collection until analysis. Containers can be supplied by C&T.
   HCL: Hydrochloric Acid to pH < 2
   HNO3: Nitric Acid to pH < 2
   H_2SO_4: Sulfuric Acid to pH < 2
   NaOH: Sodium Hydroxide to pH > 12
   ZnAc: Zinc Acetate
4. 28 day holding time for Mercury; 6 month holding time for all ICP and ICP-MS metals.
5. 100g minimum for TCLP or SPLP Extraction. 50g required for each analysis.

Legend:

mg/L	milligrams per liter (ppm)
µg/L	micrograms per liter (ppb)
mg/Kg	milligrams per kilogram (ppm)
µg/Kg	micrograms per kilogram (ppb)
VOA	40mL Amber VOA Vial
G	Amber Glass
P	Polyethylene

GENERAL CHEMISTRY	Method	Holding Time[8] Water	Holding Time[8] Soil	Minimum Volume Water	Minimum Volume Soil	Water Sampling Container	Water Sampling Preservative[9]
Acidity	SM 2310B	14 days	- -	100 mL	- -	250mL P	None
Alkalinity (as $CaCO_3$)	SM 2320B	14 days	NS[5]	100 mL	- -	250mL P	None
Ammonia Nitrogen	SM 4500NH3-D	28 days	- -	100 mL	- -	250mL P	H_2SO_4
Asbestos	Various	NS[5]	NS[5]	1 L	50 g	1L P	None
Bicarbonate Alkalinity	SM 2320B	14 days	- -	100 mL	- -	250mL P	None

GENERAL CHEMISTRY	Method	Holding Time[8]		Minimum Volume		Water Sampling	
		Water	Soil	Water	Soil	Container	Preservative[9]
Bioassay, %survival	NPDES	36 hr	- -	5 gallons	- -	5gal cube	None
Bioassay, Haz Waste screen	CCR Title 22	36 hr	36 hr	500 mL	200 g	1L G	None
Biochemical Oxygen Demand (BOD)	SM 5210B	48 hr	- -	600 mL	- -	1L P	None
Carbon, Total Organic	SM 5310C	28 days	- -	40 mL	- -	250mL G	H_2SO_4
	Walkley-Black	- -	NS[5]	- -	25 g	- -	- -
Carbon, Total Inorganic	SM 5310C	28 days	- -	40 mL	- -	250mL G	H_2SO_4
Carbonate Alkalinity	SM 2320B	NS[5]	- -	100 mL	- -	250mL P	None
Cation Exchange Capacity	EPA 9081	- -	6 mo	- -	10 g	- -	- -
Chemical Oxygen Demand (COD)	SM 5220D	28 days	- -	25 mL	- -	100mL P	H_2SO_4
COD, Filtered	SM 5220D	28 days	- -	25 mL	- -	100mL P	H_2SO_4
Chloride	EPA 300.0	28 days	- -	100 mL	- -	250mL P	None
Chlorine, Residual	SM 4500Cl-G	15 min	- -	100 mL	- -	250mL G	Foil wrapped
Coliform, Fecal		6 hr	- -	100 mL	- -	sterile 100mL P	$Na_2S_2O_3$
Color	SM 2120B	48 hr	- -	50 mL	- -	250mL G	None
Conductivity	SM 2510B	28 days	- -	100 mL	- -	250mL P	None
Corrosivity to Steel (NACE)	EPA 1110A	NS[5]	NS[5]	1 L	1000 g	1L G	None
Chromium, Hexavalent	EPA 7196A	24 hr[10]	30 days	100 mL	40 g	500mL P	None
	SM 3500Cr-D	24 hr[10]	- -	100 mL	- -	500mL P	None
	EPA 7199	24 hr[10]	- -	50 mL	- -	250mL P	None
Cyanide	SM 4500Cn-E	14 days	14 days	500 mL	5 g	500mL P	NaOH
	EPA 9010/9014	14 days	14 days	500 mL	5 g	500mL P	NaOH
Cyanide, Amenable	SM 4500Cn-E	14 days	14 days	500 mL	5 g	500mL P	NaOH
	EPA 9010/9014	14 days	14 days	500 mL	5 g	500mL P	NaOH
Cyanide, Reactive	SW846 Ch.7	NS[5]	NS[5]	25 mL	10 g	500mL P	None
Density	ASTM or AOCS	NS[5]	- -	200 mL	- -	250mL P or G	None
Dissolved Organic Carbon	SM 5310C	28 days	- -	40 mL	- -	250mL G	H_2SO_4
Dissolved Oxygen	SM 4500O-G	15 min	- -	100 mL	- -	250mL G	None
Dissolved Sulfide	SM 4500S^2-D	7 days	- -	50 mL	- -	500mL P	NaOH

GENERAL CHEMISTRY	Method	Holding Time[8]		Minimum Volume		Water Sampling	
		Water	Soil	Water	Soil	Container	Preservative[9]
Ferrous Iron (Fe2+)	SM 3500Fe-D	in field	- -	50 mL	- -	100mL P or G	HCL
Ferric Iron (Fe3+)	SM 3500Fe-D	24 hr	- -	See Notes	- -	2 x 100mL P	see Notes (6)
Flash Point	EPA 1010A	NS[5]	- -	60 mL	NA	250mL P	None
Fluoride	EPA 300.0	28 days	28 days	100 mL	10 g	250mL P	None
Free Liquids (Paint Filter Test)	EPA 9095B	NS[5]	NS[5]	100 mL	50 g	500mL wide G	None
Halogens, Total Organic	EPA 9020	28 days	28 days	200 mL	10 g	250mL P or G	H_2SO_4
Hardness, as $CaCO_3$	SM 2340B	6 mo.	- -	100 mL	- -	250mL P	HNO_3
Hexavalent Chromium	EPA 7196A	24 hr[10]	30 days	100 mL	40 g	500mL P	None
	SM 3500Cr-D	24 hr[10]	- -	100 mL	- -	500mL P	None
	EPA 7199	24 hr[10]	- -	50 mL	- -	250mL P	None
Ignitability	SW846 Ch.7	- -	NS[5]	- -	10 g	- -	None
Iron, Ferrous (Fe2+)	SM 3500FeD	24 hr	- -	50 mL	- -	100mL P	HCL
Iron, Ferric (Fe3+)	SM 3500FeD	24 hr	- -	See Notes	- -	2 x 100mL P	see Notes (6)
MBAS (Surfactants)	SM 5540C	48 hr	- -	250 mL	- -	1L P	None
Moisture	CLP-SOW	- -	NS[5]	- -	25 g	- -	None
Nitrate Nitrogen	EPA 300.0	48 hr	- -	100 mL	- -	250mL P	None
Nitrite Nitrogen	EPA 300.0	48 hr	- -	100 mL	- -	250mL P	None
Nitrate/ Nitrite Nitrogen	EPA 353.2	28 days	- -	100 mL	- -	250mL P	H_2SO_4
Nitrogen, Ammonia	SM 4500NH3-D	28 days	28 days	100 mL	10 g	250mL P	H_2SO_4
Nitrogen, Total Kjeldahl (TKN)	SM 4500NH3-C	28 days	28 days	50 mL	5 g	1L P	H_2SO_4
Oil & Grease, Petroleum (H.E.M.-SG)	EPA 1664A	28 days	- -	1 L	- -	1L G	HCL
Oil & Grease, Total (H.E.M.)		28 days	- -	1 L	- -	1L G	HCL
Organic Carbon, Total	SM 5310C	28 days	- -	40 mL	- -	250mL G	H_2SO_4
	Walkley-Black	- -	NS[5]	- -	25 g	- -	- -
Organic Lead	CA LUFT[7]	14 days	14 days	100 mL	50 g	500mL G	None
Ortho-phosphate Phosphorus	SM 4500P-E	48 hr[11]	- -	50 mL	- -	100mL P	None
Oxygen Demand, Biochemical	SM 5210B	48 hr	- -	600 mL	- -	1L P	None
Oxygen Demand, Chemical	SM 5220D	28 days	- -	100 mL	- -	250mL P	H_2SO_4

GENERAL CHEMISTRY	Method	Holding Time[8]		Minimum Volume		Water Sampling	
		Water	Soil	Water	Soil	Container	Preservative[9]
Oxygen, Dissolved	SM 4500O-G	15 min	- -	100 mL	- -	250mL G	None
Paint Filter Test	EPA 9095	NS[5]	NS[5]	100 mL	50 g	500mL wide	None
Perchlorate	EPA 314.0	28 days	- -	100 mL	- -	250mL P	None
PH	SM 4500H+B	15 min		100 mL		250mL P	None
	EPA 9040C/ 9045D	24 hr	14 days	100 mL	50 g	250mL P	None
Phenolic Compounds	EPA 420.1	28 days	- -	500 mL	- -	1L G	H_2SO_4
Phosphate, ortho-	SM 4500P-E	48 hr	- -	50 mL	- -	100mL P	None
Phosphate, Total	SM 4500P-E	28 days	28 days	50 mL	10 g	250mL P	H_2SO_4
Reactive Cyanide	SW846 Ch.7	NS[5]	NS[5]	25 mL	10 g	500mL P	None
Reactive Sulfide	SW846 Ch.7	NS[5]	NS[5]	25 mL	10 g	500mL P	None
Residual Chlorine	SM 4500Cl-G	15 min	- -	50 mL	- -	100mL G	None
Resistivity	SM 2510B	28 days	- -	100 mL	- -	250mL P	None
Salinity	SM 2520B	NS[5]	- -	250 mL	- -	250mL G	wax seal
Silica	SM 4500SiO_2-C	28 days	28 days	50 mL	10 g	100mL P	None
Solids, Settleable	SM 2540F	48 hr	- -	1 L	- -	1L G	None
Solids, Total Dissolved	SM 2540C	7 days	- -	100 mL	- -	250mL P	None
Solids, Total Suspended	SM 2540D	7 days	- -	100 mL	- -	250mL P	None
Solids, Total Volatile	SM 2540E	7 days	NS[5]	100 mL	50 g	250mL P	None
Sulfate	EPA 300.0	28 days	- -	100 mL	- -	250mL P	None
Sulfide	SM 4500S^2-D	7 days	- -	50 mL	- -	500mL P	NaOH + ZnAc
Sulfide, Dissolved	SM 4500S^2-D	7 days	- -	50 mL	- -	500mL P	NaOH
Sulfide, Reactive	SW846 Ch.7	NS[5]	NS[5]	25 mL	10 g	500mL P	None
Sulfite	SM 4500SO_3-B	15 min	- -	100 mL	- -	500mL P	None
Surfactants (MBAS)	SM 5540C	48 hr	- -	250 mL	- -	1L P	None
Total Dissolved Solids (TDS)	SM 2540C	7 days	- -	100 mL	- -	250mL P	None
Total Inorganic Carbon	SM 5310C	28 days	28 days	40 mL	25 g	250mL G	H_2SO_4
Total Kjeldahl Nitrogen (TKN)	SM 4500NH3-C	28 days	28 days	50 mL	5 g	1L P	H_2SO_4
Total Organic Carbon (TOC)	SM 5310C	28 days	- -	40 mL	- -	250mL G	H_2SO_4

GENERAL CHEMISTRY	Method	Holding Time[8]		Minimum Volume		Water Sampling	
		Water	Soil	Water	Soil	Container	Preservative[9]
	Walkley-Black	- -	NS[5]	- -	25 g	- -	- -
Total Organic Halogens (TOX)	EPA 9020B	28 days	28 days	200 mL	10 g	250mL G[12]	H_2SO_4
Total Suspended Solids (TSS)	SM 2540D	7 days	- -	100 mL	- -	250mL P	None
Total Volatile Solids (TVS)	SM 2540E	7 days	NS[5]	100 mL	50 g	250mL P	None
Tributyl Tin	GC/FPD	NS[5]	NS[5]	1 L	10 g	1L P or G	None
Turbidity	SM 2130B	48 hr	- -	100 mL	- -	250mL P	None
Viscosity	ASTM methods	NS[5]	- -	25 mL	- -	50mL P	None

General Minerals	Method	Holding Time[8]		Minimum Volume		Water Sampling	
		Water	Soil	Water	Soil	Container	Preservative[9]
Alkalinity (as $CaCO_3$)	SM 2320B	14 days	NS[5]	100 mL	- -	250mL P	None
Chloride, Sulfate	EPA 300.0	28 days	- -	100 mL	10 g	250mL P	None
Conductivity	SM 2510B	28 days	- -	100 mL	- -	250mL P	None
pH	SM 4500H+B	15 min	- -	100 mL	- -	250mL P	None
Total Dissolved Solids (TDS)	SM 2540C	7 days	- -	100 mL	- -	250mL P	None
Ca, Fe, Mg, Na, Zn	EPA 200.7	6 mo	6 mo	100 mL	- -	250mL P	HNO_3
Hardness (run with Metals)	SM 2340B	6 mo	6 mo	100 mL	- -	250mL P	HNO_3
Optional Analyses (included upon request):							
Surfactants (MBAS)	SM 5540C	48 hr	- -	250 mL	- -	1L P	None

Ion Chromatography	Method	Holding Time[8]		Minimum Volume		Water Sampling	
		Water	Soil	Water	Soil	Container	Preservative[9]
Bromide	EPA 300.0	28 days	- -	100 mL	10 g	250mL P	None
Chloride	EPA 300.0	28 days	- -	100 mL	10 g	250mL P	None
Fluoride	EPA 300.0	28 days	- -	100 mL	10 g	250mL P	None
Nitrate Nitrogen	EPA 300.0	48 hr	- -	100 mL	10 g	250mL P	None
Nitrite Nitrogen	EPA 300.0	48 hr	- -	100 mL	10 g	250mL P	None
Sulfate	EPA 300.0	28 days	- -	100 mL	10 g	250mL P	None

Ion Chromatography	Method	Holding Time[8]		Minimum Volume		Water Sampling	
		Water	Soil	Water	Soil	Container	Preservative[9]
Hexavalent Chromium	EPA 7199	24 hr[10]	- -	50 mL	10 g	250mL P	None
Perchlorate	EPA 314.0	28 days	- -	100 mL	10 g	250mL P	None

Notes:

5. NS: No holding time is specified in the regulations for this method.
6. Ferric Iron (Fe^{3+}) is the difference between total and ferrous iron.
   Requires submission of two polyethylene bottles, one preserved with HCl and one with HNO_3.
7. CA LUFT: California Department of Health Services Leaking Underground Fuel Tank Manual 1989
8. Holding time specified in 40CFR136 Table 2 (Clean Water Act/ NPDES 2012) and SW-846 Table 2-36 (1996)
9. Samples should be kept at $\leq 6^0$C from time of collection until analysis. Containers can be supplied by C&T.
   - HCL: Hydrochloric Acid to pH < 2
   - HNO3: Nitric Acid to pH < 2
   - H_2SO_4: Sulfuric Acid to pH < 2
   - NaOH: Sodium Hydroxide to pH > 12
   - ZnAc: Zinc Acetate
10. Holding time can be extended to 28 days by preservation with EPA 218.6 buffer to pH 9.3 – 9.7.
11. Samples for Ortho-phosphate must be filtered within 15 minutes of collection and analyzed within 48 hours.
12. Samples for TOX (Total Organic Halides) should be collected with no headspace remaining in bottle.

Legend:

mg/L	milligrams per liter (ppm)
µg/L	micrograms per liter (ppb)
mg/Kg	milligrams per kilogram (ppm)
µg/Kg	micrograms per kilogram (ppb)
VOA	40mL Amber VOA Vial
G	Amber Glass
P	Polyethylene

Appendix 2: List of C&T Standard Operating Procedures

The following documents were in use by C&T as of July 26, 2013:

Dept.	SOP#	Title	Filename	Rev #	Approval Date
QA	1.0	**EQUIPMENT & SUPPLIES**	--	--	--
QA	1.1	Storage Blanks for Monitoring VOC Contamination	VOA Storage	8	4/2/2012
QA	1.4	Balance & Weight Set Procedures	Balance Calibration	9	3/8/2013
QA	1.5	Calibrating Thermometers & Temperature Controls	Calibrating Thermometers	13	6/7/2012
QA	1.5.2	Correction Factors for Digital Thermometers	Digital Thermometer Corr.	3	4/2/2012
QA	1.6	Pipette & Auto-Dispensor Calibration Verification	Pipette	10	5/20/2013
QA	1.8	DI Water Specifications & Testing Procedures	DI H2O	7	4/2/2012
QA	1.11	Purchasing Services & Supplies	Purchasing Svcs and Supplies	4	5/15/2013
QA	1.12	Purchasing Major Equipment	Purch Major Equip	3	5/15/2013
QA	**2.0**	**AUDITING & COMPLIANCE MEASURES**			
QA	2.1	Audit Response & Follow-up	Audit Followup	6	12/28/2012
QA	2.2	Internal Audits	Internal Audit	8	12/17/2012
QA	2.3	Safety & Facilities Audit Checklist	Aud_Safety+Facility	5	12/28/2012
QA	2.4	Extraction Lab Audit Checklist	aud_xlab	6	1/4/2013
QA	2.5	Inorganics Audit Checklists (templates in F:\qc\audits\inhouse\forms\...)			
QA	2.5.1	ICP Prep Audit Checklist	aud_icp-prep	8	1/4/2013
QA	2.5.2	ICP Analysis Audit Checklist	aud_icp	8	1/4/2013
QA	2.5.3	Mercury Audit Checklist	aud_hg	6	1/11/2013
QA	2.5.4	Wet Chemistry Audit Checklist	aud_wet	5	12/12/2012
QA	2.5.5	ICP-MS Audit Checklist	aud_icp-ms	2	1/11/2013
QA	2.6	GC & HPLC Audit Checklists (templates in F:\qc\audits\inhouse\forms\...)			
QA	2.6.1	TVH/BTXE Audit Checklist	aud_tvh	10	1/19/2010
QA	2.6.2	T.E.H. Audit Checklist	aud_teh	11	3/25/2013
QA	2.6.3	Pesticides Audit Checklist	aud_8081	9	3/25/2013
QA	2.6.4	PAH by HPLC Audit Checklist	aud_8310	9	3/25/2013
QA	2.6.5	Ion Chromatography Audit Checklist	aud_ic	3	12/13/2012
QA	2.6.6	PCB Audit Checklist	aud_8082	10	3/25/2013

QA	2.7	GC/MS Audit Checklists (templates in F:\qc\audits\inhouse\forms\...)			
QA	2.7.1	8260 Audit Checklist	aud_8260	7	1/21/2008
QA	2.7.2	8260 Audit Checklist	aud_8270	9	3/25/2013
QA	2.8	Client Services Audit Checklists (templates in F:\qc\audits\inhouse\forms\...)			
QA	2.8.1	Sample Control Audit Checklist	aud_login	6	12/20/2012
QA	2.8.2	Bottle Prep Audit Checklist	aud_bottle-prep	6	12/21/2012
QA	2.8.3	Project Management Audit Checklist	aud_projmgr	6	12/20/2012
QA	2.9	Tape Audits	aud_tape	4	1/25/2011
QA	2.10	Tape Audit Checklist	aud_tape_checklist	0	12/20/2012
QA	2.11	Policy on use of the A2LA Logo	a2la logo	1	2/8/2013
QA	2.12	Audit of QA System	aud_qa	8	12/20/2012
QA	3.0	**QUALITY ASSURANCE EVALUATIONS**			
QA	3.2	Monthly QA Activity Report	QA Monthly Report	5	2/8/2013
QA	3.3	PT Samples	PT Samples	11	4/24/2013
QA	3.4	Management Review of QA Program	Mgmt Review of QA	6	1/14/2013
QA	3.5	Measurement Uncertainty (ASTM E-2554-07)	Measurement Uncertainty	0	5/15/2013
QA	4.0	**SPECIFICATIONS & CORRECTIVE ACTIONS**			
QA	4.1	Control Limits & Trend Analysis	Control Limits	11	2/8/2013
QA	4.2	Corrective Action Procedure	Corrective Action	10	2/12/2013
QA	4.3	Method Validation, IDOC (Initial Demonstration of Capability)	Method Validation	5	4/2/2012
QA	4.4	Method Detection Limits (MDL)	MDL+LOD	14	4/01/13
QA	4.5	Instrument Detection Limits (IDL) for ICP & ICPMS	IDL study	3	4/01/13
QA	4.6	Limit of Quantitation (LOQ) / Reporting Limits	LOQ study	5	11/13/2012
QA	5.0	**DOCUMENTATION PROCEDURES**			
QA	5.3	Generating and Revising SOPs	SOP_sop	14	7/14/2013
QA	5.4	Lab Benchbooks (Content & Filing)	Benchbook	7	5/15/2013
QA	5.5	Data Review	Data review	7	5/15/2013
QA	5.7	Records Archive and Custody	lab records	3	5/15/2013
QA	5.8	Updating the Lab QA Manual	QAM updates	3	2/11/2013
QA	6.0	**STAFF DEVELOPMENT & TRAINING**			
QA	6.1	SOP Calculations	SOP equations	4	11/27/2009
QA	6.2	Analyst Training & Demonstration of Capability	Training_IDOC	8	12/21/2012
QA	6.3	Training Checklists (templates in F:\qc\training\checklists\...)	--	--	--
QA	6.3.1	Training Checklist - Organics	organics	3	1/7/2009

QA	6.3.2	Training Checklist - Metals	metals	4	1/7/2009
QA	6.3.3	Training Checklist - Wet Chem	wetchem	4	1/7/2009
QA	6.3.4	Training Checklist - Xlab	xlab	1	1/7/2009
QA	6.3.5	Training Checklist - QC Chemist	qc-chemist_data review	2	1/7/2008
QA	6.3.6	Training Checklist - Project Management	project manager	0	1/7/2008
QA	6.3.7	Training Checklist - Sample Control	login	0	8/22/2007
QA	6.3.4	Training Checklists - Radiochemistry			
QA	9.0	**LIMS & DATA SYSTEMS**			
QA	9.1	LIMS Data Security	LIMS Data Security	7	4/2/2012
QA	9.2	Software & Spreadsheet Development	Software Development	6	4/2/2012
QA	9.3	LIMS Software Maintenance	Software Maintenance	6	4/19/2011
QA	9.4	Data Acquisition Software Approval	Data Acquisition	2	4/19/2011
QA	9.5	Archiving & Retrieval of Electronic Records	Data Archiving	2	4/19/2011
QA	9.6	Compliant Manual Integrations	Manual Integration	10	4/2/2012
QA	9.7	LIMS Compound Lists (CS Directory)	LIMS Compound Lists	5	3/9/2011
QA	9.8	LIMS Calibration Standards Database	Standards Database	5	4/19/2011
QA	9.10	Creating New Products in LIMS	prodmaster	1	*in progress*
QA	9.11	Audit Trails for Data Acquisition Systems	audit trails	1	4/22/2011
CS	1.1	**Sample Receiving**	sample receiving	9	1/4/2013
CS	1.1.1	Chain of custody form (pdf)	chain of custody	6	2/7/2011
CS	1.1.2	Cooler Receipt Form	cooler receipt	10	9/1/2012
CS	1.1.3	Sample Receiving Discrepancies	receipt problems	2	9/1/2012
CS	1.2	Logging Samples into LIMS	s_login	9	1/4/2013
CS	1.3	Sample Labeling	sample labeling	5	1/4/2013
CS	1.4	Verifying Sample Preservation	s_preservation	9	4/26/2013
CS	1.5	Sample Storage	sample storage	9	4/24/2013
CS	1.5.1	Legal Chain of Custody	legal chain of custody	4	3/11/2013
CS	1.6	Processing Logins	processing login	5	1/30/2013
CS	1.7	Sample Subcontracting	subcontract	5	1/30/2013
CS	1.8	Sample Tracking	sample tracking	3	1/4/2013
CS	1.9	Interlab Sample Transfer	interlab	3	1/4/2013
CS	1.10	Radioactive Material Receipt & Accountability	RAM_receipt & accountability	0	8/31/2012
CS	2.0	**SAMPLE HANDLING PROCEDURES**			
CS	2.1	Shipping Samples & Containers	shipping	6	1/4/2013

CS	2.3	Subsampling & Compositing	composite	5	4/19/2013
CS	2.4	Multi-Incremental Sub-sampling (MIS)	multi-incremental	4	4/19/2013
CS	2.5	Crushing Rocks & Concrete	crushing rocks	3	4/19/2013
CS	2.6	Lab Waste Disposal	facilities\lab waste	7	8/1/2012
CS	3.0	**BOTTLES & STORAGE CONDITIONS**			
CS	3.1	Sample Containers, Preservation & Holding Time	bottle-prep	9	4/26/2013
CS	4.0	**CLIENT SERVICES PROCEDURES**			
CS	4.1	Reviewing Quality Assurance Project Plans (QAPPs)	qapp_review	7	1/11/2012
CS	4.2	Filing Active Paperwork	filing active paperwork	4	1/29/2013
CS	4.3	Archiving Completed Reports	rpt_archive	5	1/29/2013
CS	4.4	Client Communications	client communication	5	1/29/2013
CS	4.5	Assembling Data Packages	data_pkg	4	1/29/2013
CS	4.6	Case Narratives	case narrative	5	1/29/2013
CS	4.7	Confidential Business Information	confidential	3	1/29/2013
CS	4.8	Creating LIMS Compound Lists	LIMS compound lists	5	1/29/2013
CS	4.9	Processing Paperless Reports	paperless reporting	3	1/29/2013
CS	4.10	Project Setup	project setup	0	5/3/2013
VOA	1.0	**GENERAL INFORMATION**			
VOA	1.1	Calculating Various QA Parameters	qa\calculations	3	4/21/2008
VOA	1.2	Spill Control & Cleanup	Spills	1	12/1/2010
VOA	1.3	Helium Tanks @ 2840	Facilities\Gas_Tanks_2840	2	1/9/2013
VOA	2.0	**GC/MS METHODS FOR VOLATILES**			
VOA	2.4	VOCs by GC/MS Methods 8260B, 8260C, 624	MS_VOA	12	3/13/2013
VOA	2.5	VOCs in Drinking Water by EPA 524.2	524	1	archived
VOA	2.6	Gasoline by EPA 8260B	tvh_8260	1	3/12/2013
VOA	3.0	**EXTRACTIONS, DILUTIONS & SCREENING**			
VOA	3.2	TCLP Zero Headspace Extraction (ZHE)	TCLP_ZHE	6	8/31/2012
VOA	3.4	VOC Screening by Ambient Headspace Analysis	voc_screener	4	4/12/2013
VOA	4.0	**AIR METHODS**			
VOA	4.1	VOCs in Air by GC/MS	msair	3	5/31/2012
VOA	4.2	Cleaning Summa Canisters	can_clean	3	8/31/2012
VOA	4.3	Gross Gases & Hydrocarbons by TO-3 and ASTM C-1946	TO-3 and ASTM C-1946	4	8/31/2012
VOA	4.4	Cleaning Sample Trains	Cleaning Sample Trains	3	5/17/2013
VOA	4.5	Preparing Gas Calibration Standards	TOprepstds	1	archived

VOA	4.6	Storage & Tracking of Canisters at 2840	can_tracking	1	3/4/2013
VOA	4.7	Preparation of Canisters for Shipment	can_prep_ship	1	3/4/2013
VOA	7.0	**GC METHODS FOR VOLATILE ORGANICS**			
VOA	7.1	TPH/Gasoline + BTXE	tvh_btxe	21	6/6/2012
VOA	7.2	Dissolved Gases by RSK-175	rsk175	5	4/12/2013
XLAB	1.0	**GENERAL EXTRACTION LAB PROCEDURES**			
XLAB	1.1	Sub-sampling & Compositing	sub_sample_composite	5	1/25/2012
XLAB	1.3	Spill Control & Cleanup	spills	2	1/25/2012
XLAB	1.4	Calculations & Dilutions	Calculations	4	9/1/2010
XLAB	1.6	Glassware Calibration	GlassCal	4	1/25/2012
XLAB	1.9	Extraction Training Benchmarks	3mo benchmarks	1	8/18/2012
XLAB	1.11	Screening of Solvents & Reagents	reagent screen	3	1/25/2012
XLAB	1.12	Sonicator Tuning	sonicator tuning	1	11/25/2012
XLAB	1.13	Dishwashing Procedure for the xlab	dishwashing	5	1/25/2012
XLAB	2.0	**LIQUID SAMPLE EXTRACTIONS**			
XLAB	2.1.1	Total Extractable Hydrocarbons by Separatory Funnel Extraction	teh_sep	1	11/25/2012
XLAB	2.2.1	Total Extractable Hydrocarbons by Continuous L/L Extraction	teh_3520	14	1/28/2013
XLAB	2.2.4	PAH-8310 by Continuous L/L Extraction	8310_3520	10	3/1/2013
XLAB	2.2.5	PCBs by Continuous L/L Extraction	PCB_3520	13	7/29/2013
XLAB	2.2.6	Chlorinated Pesticides by Continuous L/L Extraction	8081_3520	21	7/29/2013
XLAB	2.2.7	Semivolatile Organics by Continuous L/L Extraction	8270_3520	19	2/19/2013
XLAB	2.4	Nitroaromatics & Nitroamines (8330) by SPE	8330w	4	8/31/2012
XLAB	3.0	**SOLID SAMPLE EXTRACTIONS**			
XLAB	3.1	Soxhlet Extraction - EPA 3540	EPA3540_Soxhlet	7	4/3/2013
XLAB	3.2.2	PAH-8310 by Sonication Extraction	8310_3550	9	3/14/2013
XLAB	3.2.3	PCBs by Sonication Extraction	pcb_3550	11	3/8/2013
XLAB	3.2.4	Chlorinated Pesticides by Sonication Extraction	8081_3550	14	3/14/2013
XLAB	3.2.5	SVOC (BNA) by Sonication Extraction	8270_3550	14	3/22/2013
XLAB	3.2.6	Total Extractable Hydrocarbons by Sonication Extraction	teh_3550	2	3/5/2013
XLAB	3.3	Total Extractable Hydrocarbons by Shaker Table	teh_shaker	13	3/22/2013
XLAB	3.4.3	PCB by Pressurized Fluid Extraction (EPA 3545)	pcb_3545	1	archived
XLAB	3.4.4	Pesticides by Pressurized Fluid Extraction	8081_3545	1	archived
XLAB	3.6	Nitroaromatics & Nitroamines (8330)	8330s	6	8/27/2012
XLAB	3.7	Microwave Extraction - EPA 3546	3546_microwave	draft	archived

XLAB	4.0	**WASTE DILUTIONS & SCREENING METHODS**			
XLAB	4.1	PCBs in Oil	pcb_waste_diln	6	4/2/2013
XLAB	4.2	Organochlorine Pesticide Waste	8081_waste_diln	5	4/3/2013
XLAB	4.4	TEH Waste Dilution	teh_waste_diln	3	4/3/2013
XLAB	4.5	8270 Waste Dilution	8270_waste_diln	5	4/5/2013
XLAB	5.0	**SAMPLE CLEANUP & FRACTIONATION**			
XLAB	5.1	MA-DEP EPH Soil & Water	ext_pet_HC_Frac	draft	archived
XLAB	5.8	GPC using ABC Model AS2000	gpc_as2000	6	archived
XLAB	5.9	Florisil Cleanup of Hexane Extracts	florisil_3620	3	4/8/2013
XLAB	5.10	Sulfur Cleanup by EPA 3660	sulfur cleanup_3660	5	4/8/2013
XLAB	5.11	Silica Gel Cleanup of TEH Extracts	tehsg_3630	6	4/8/2013
XLAB	5.12	Filtration of Water for Dissolved Organics	filtration_water	1	archived
XLAB	6.0	**EPA-CLP EXTRACTION METHODS**	<archived since 1995>	--	--
XLAB	7.0	**SPECIAL PROJECTS**			
XLAB	7.3	PCB Congeners	pcb congeners_extn	1	4/26/2013
XLAB	7.6	Golder PCB Manchester Extraction	PCB-Manchester	4	1/25/2012
XLAB	7.7	8270-SIM	8270_sim_extn	4	1/17/2013
XLAB	7.8	Zeneca Organo-Phosphorus Pesticides in Water	opp_water	1	9/30/2010
XLAB	7.9	Zeneca Organo-Phosphorus Pesticides in Soil	opp_soil	1	9/30/2010
XLAB	7.10	Aerojet OPBA Extraction from Solid Samples by Shaker Table	obpa_s	1	archived
XLAB	7.11	Shaw-Bikini Atoll Field Extraction for PCB +THE	dilution extraction	1	3/9/2010
XLAB	8.0	**WIPES & FILTERS**			
XLAB	8.1	PCB in Wipe Samples by Sonication Extraction	pcb_wipe	8	4/9/2013
XLAB	8.2	TO-10A Extraction of PCBs from PUFFs	TO-10_PUFF	3	4/18/2013
XLAB	8.5	8270 SVOC in Wipe Samples	8270_wipe	5	4/11/2013
SVOC	1.0	**GENERAL PROCEDURES & INFORMATION**			
SVOC	1.1	Calculations	qa\SOP equations	4	11/27/2009
SVOC	1.2	Helium Tanks	helium tanks	1	5/30/2008
SVOC	3.0	**ELECTRON CAPTURE DETECTORS**	ecd	4	1/4/2013
SVOC	3.1	Tailing Factor Calculations	tailing factor	1	6/1/2007
SVOC	3.2	Polychlorinated Biphenyls by EPA 8082 & 608	pcb	10	4/19/2013
SVOC	3.3	Organochlorine Pesticides by EPA 8081A, 8081B & 608	pesticides	17	3/1/2013
SVOC	3.6	PCB Congeners by EPA 8082	8082 congeners	1	11/29/2010
SVOC	4.0	**GC-FID and GC-NPD Analyses**	--	--	--

SVOC	4.2	Alcohols by EPA 8015B	alcohols	2	1/4/2013
SVOC	5.0	**EXTRACTABLE HYDROCARBON METHODS**	--	--	--
SVOC	5.1	Total Extractable Hydrocarbons	TEH	18	4/17/2013
SVOC	7.0	**HPLC METHODS**	--	--	--
SVOC	7.1	PAH by HPLC Method EPA 8310	8310	11	4/18/2013
SVOC	7.2	Nitroaromatics & Nitramines by EPA 8330A & 8330B	8330	6	5/1/2013
SVOC	8.0	**SEMIVOLATILE ORGANICS BY GC/MS**	--	--	--
SVOC	8.1	SVOC (BNA) by GCMS Methods 8270C, 8270D & 625	BNA	13	6/14/2013
SVOC	8.2	PAH & 1,4-Dioxane by EPA 8270C-SIM and 8270D-SIM	8270-SIM	5	2/22/2013
SVOC	8.3	OPP for Zeneca by EPA 8270-SIM	OPP	1	11/4/2010
SVOC	8.4	OBPA for Aerojet by EPA 8270-SIM	8270-SIM_OBPA	1	archived
MET	1.0	**TCLP & WET (STLC) EXTRACTIONS**	--	--	--
MET	1.1	TCLP Extraction of Solid Samples	TCLP-solid	6	7/30/2013
MET	1.2	TCLP Extraction of Liquid Samples	TCLP-liquid	3	4/19/2013
MET	1.3	TCLP Extraction of Biphasic Samples	TCLP-biphasic	3	4/19/2013
MET	1.4	SPLP Extraction of Solid Samples	SPLP-solid	2	4/19/2013
MET	1.8	California Waste Extraction Test (WET)	wet_solid	3	4/19/2013
MET	1.9	California Waste Extraction Test (WET) - Biphasic	wet_mixed	5	4/19/2013
MET	2.0	**WATER & SOIL DIGESTIONS for ICP & ICPMS**	--	--	--
MET	2.1	Filtration for Dissolved Metals	filtration	3	4/19/2013
MET	2.2	3010A: Liquid and TCLP Digestion for ICP	3010A_icp	15	9/14/2012
MET	2.3	200.7 Prep: Acid Digestion for Drinking Water & Wastewater	200.7 digest_icp	7	7/31/2013
MET	2.4	3050B: Solids Digestion for ICP & ICPMS	3050b	13	5/17/2013
MET	2.5	200.8 Prep: Digestion of Aqueous Samples for ICPMS	200.8digest	7	7/31/2013
MET	3.0	**MISCELLANEOUS PREP for ICP & ICPMS**	--	--	--
MET	3.1.1	Air Cassette Filters & Wipe Samples	NIOSH 7300	3	3/9/2012
MET	3.1.2	High Volume Air Filters	40CFR high vol filters	2	3/9/2012
MET	3.1.3	Multiple Metals Stationary Sources (CARB436)	--	--	*planned*
MET	3.1.4	Analysis of Metals in Impinger Solutions	--	--	*planned*
MET	3.2.1	GWF Coke Samples - Ashing & Digestion	ASTM D3683	2	3/9/2012
MET	3.2.2	Light Oil Samples	--	--	*planned*
MET	3.2.3	Heavy Oil Samples	--	--	*planned*
MET	3.3.2	Collecting Wipe Samples	NIOSH 9100_collecting wipes	2	2/12/2013
MET	3.4	Cation Exchange Capacity by EPA 9081	cec_9081	1	2/12/2013

MET	3.5	Multi-Incremental Sub-Sampling	(client services SOP) multi-incremental	4	4/19/2013
MET	4.0	**ICP-AES & ICP-MS ANALYSES**	--	--	--
MET	4.4	ICP Metals Analysis by EPA 6010B, 6010C & 200.7	ICP Metals	15	5/10/2013
MET	4.6	ICP-MS Metals Analyses by EPA 6020, 6020A & 200.8	ICPMS Metals	10	8/01/2013
MET	5.0	**MERCURY AA PREP & ANALYSES**	--	--	--
MET	5.1	Mercury in Aqueous Samples by EPA 7470A & 245.1	Hg_water	17	7/26/2013
MET	5.2	Mercury in Solid Samples by EPA 7471A	Hg_soil	17	2/25/2013
MET	5.3	Mercury in Solids & Liquids by EPA 7473	Hg_7473	0	draft
MET	6.0	**MISCELLANEOUS**	--	--	--
MET	10.1	Moisture (see Wetchem 1.3)	wetchem\moisture	6	2/25/2013
MET	10.3	Spill Control & Cleanup	metals_spills	3	3/4/2013
WET	1.0	**GRAVIMETRIC METHODS**	--	--	--
WET	1.1	Oil & Grease by EPA 1664A	1664	7	2/22/13
WET	1.2	Corrosivity toward Steel, EPA 1110	corrosivity	5	2/15/2013
WET	1.3	Moisture by CLP Inorganics	moisture	6	2/25/2013
WET	1.4	Settleable Solids by SM2540F	settleable	2	3/1/2013
WET	1.5	TDS - Total Dissolved Solids by SM2540C	tds	11	3/1/2013
WET	1.6	TSS - Total Suspended Solids by SM2540D	tss	9	3/1/2013
WET	1.7	Paint Filter Liquids Test by EPA 9095B	paint_filter	1	2/15/2013
WET	1.8	Total Solids by SM2540B	ts_rv0	1	3/1/2013
WET	2.0	**METER METHODS**	--	--	--
WET	2.1.1	Ammonia in Water by SM20:4500NH2-B/D	ammonia_h2o	12	3/11/2013
WET	2.1.2	Ammonia in Soil by SM20:4500NH2-B/D	ammonia_soil	10	3/13/2013
WET	2.2	BOD by SM5210AB	BOD	12	5/15/2013
WET	2.3	Dissolved Oxygen by SM4500O-G	DO	2	2/15/2013
WET	2.4	pH in Soil by EPA 9045C	ph_soil	7	2/19/2013
WET	2.5	pH in Water by SM4500H+B	ph_water	11	2/19/2013
WET	2.6	Specific Conductance by SM2510B	conductivity	9	3/8/2013
WET	2.7	Turbidity by SM2130B	turbidity	8	2/15/2013
WET	3.0	**TITRATION METHODS**	--	--	--
WET	3.1	Alkalinity by SM2320B	alkalinity	10	3/11/2013
WET	3.2	Sulfide by EPA 9030B/9034	sulfide_9030	8	4/15/2013
WET	3.3	Total Organic Carbon in Soil by Walkley-Black	toc_wb	4	4/16/2013

WET	3.4	Sulfite by SM4500SO3-B	sulfite	1	3/7/2013
WET	3.5	Total Kjeldahl Nitrogen by SM4500Norg-C	tkn	7	4/17/2013
WET	4.0	**SPECTROPHOTOMETRIC METHODS**	--	--	--
WET	4.1	COD by SM5220D	cod	14	3/18/2013
WET	4.2	Cyanide by SM20:4500CN & EPA 9010C/9014	cyanide	12	5/15/2013
WET	4.3	Ferrous Iron by SM3500Fe-D	fe2+	4	4/10/2013
WET	4.4	Hexavalent Chromium in Water by EPA 7196A	hexcr_h2o	11	3/13/2013
WET	4.5	Hexavalent Chromium in Soil by EPA 3060A/7196A	hexcr_soil	11	3/13/2013
WET	4.6	Phenols by SM5530 / EPA 420.1	phenols	13	4/24/2013
WET	4.7.1	Phosphorus, Ortho- by SM4500P-E	po4-o	7	2/15/2013
WET	4.7.2	Phosphorus, Total by SM4500P-E	po4-t	6	2/15/2013
WET	4.8	Residual Chlorine by SM4500CL-G	residual cl	8	3/18/2013
WET	4.9	Sulfide by SM4500S2-D	sulfide_water	7	3/29/2013
WET	4.10	Silica by SM4500Si	silica	9	4/3/2013
WET	4.11	Surfactants (MBAS) by SM5540C	mbas	9	4/2/2013
WET	4.12.1	TOC - Total Organic Carbon by SM5310C	toc_water	10	7/24/2013
WET	4.12.2	TOC - Total Organic Carbon by EPA 9060	toc_9060	1	*draft*
WET	5.0	**MISCELLANEOUS**			
WET	5.1	Flash Point by EPA 1010/1010A, ASTM D-93	flash	8	3/1/2013
WET	5.2	Hardness by Calculation, SM2340B	<now in ICP Metals SOP>		
WET	5.3	Ignitability of Solids by EPA 1030	ignite_1030	4	5/29/2013
WET	5.4	Reactivity, Cyanide & Sulfide, SW846 Ch.7	reactivity	6	5/29/2013
WET	5.5	Temperature by EPA 170.1	temperature	2	1/6/2012
WET	6.0	**ION CHROMATOGRAPHY METHODS**	--	--	--
WET	6.1	Anions by EPA 300.0	anions_300	11	7/24/2013
WET	6.2	Perchlorate by EPA 314	clo4_314	7	7/26/2013
WET	6.3	Hexavalent Chromium by EPA 7199	cr6-ic	3	8/31/2012
RAD	1.0	**GENERAL PROCEDURES (section 1 only applies to Berkeley)**			
RAD	1.1	Meter Quality Assurance Check	<same>	1	8/31/2012
RAD	1.2	Dry Radioactive Waste Disposal	<same>	1	8/31/2012
RAD	1.3	Radiation Surveys	<same>	0	8/31/2012
RAD	1.4	Radiation Spill Response	spill	0	8/31/2012
RAD	1.5	Radioactive Material Receipt & Accountability	RAM_receipt & accountability	0	8/31/2012
RAD	1.6	Radioactive Material Shipment	shipment	0	8/31/2012

RAD	1.7	Radiation Safety Training	training	0	8/31/2012
RAD	2.0	**SAMPLE PREP METHODS**	--	--	--
RAD	2.1	Soil Sample Prep for Gamma Spectroscopy	Soil sample prep	2	8/31/2012
RAD	3.0	**SAMPLE ANALYSIS METHODS**	--	--	--
RAD	3.1	Gamma Ray Activity GS186	Gamma GS186	3	8/31/2012
RAD	3.2	Gross Alpha/Beta Radiation	Alpha/Beta	2	8/31/2012
RAD	3.3	Ra226/228 Gamma Ingrowth	Ra226	0	8/31/2012
RAD	4.0	**MISCELLANEOUS**	--	--	--
RAD	4.1	Radiological Data Review	Rad Data Review	1	8/31/2012

APPENDIX_3: C&T MAJOR LABORATORY EQUIPMENT

Volatile Organics	Total#	Instrument Model & Serial Number	Autosampler Model & Serial Number	Detector Model & Serial Number	In Service	SYS_ID
GC-FID/ dual PID	5	HP 5890A, 3336A54137	EST Archon 8100, 14025 EST Encon 337012304E/P		Oct.88	GC-04
		HP 5890A, 2607A07244	EST Archon 8100, 13972 EST Encon 278061303E/P		May-90	GC-05
		HP 5890A, 2938A24861	OI Archon 4552, 13245 OI 4560, M106460159		Sep.91	GC-07
		HP 5890A, 3133A37270	EST Encon 251013003E/P EST Archon 26N002		May 98	GC-19
GC/MS VOC	12	HP 5890, 2750A16308	Tekmar Solatek 72, US02218011 Tekmar 3100, US02221018	HP 5972A, 3501A02681	Apr.91	VOA-02
		HP 5890, 3235A46191	EST Archon 8100, 14025 Encon P&T, 314100803P	HP 5972, 3251A00061	Dec.94	VOA-04
		HP 6890, US00001296	EST Archon 8100, 14254 Encon P&T, 382082604	HP 6890, 00001296	Aug.96	VOA-05
		HP 5890, 2413A04599	Tekmar SolaTek, US01228004 Tekmar 3011, US01248008	HP 5972, 3341A01078	Feb.99	VOA-06
		HP 6890, US00034530	EST Archon 8100, 14520 Encon P&T, 366052704	HP 5973, 94260135	Jun.00	VOA-07
		HP 6890, US00006731	Tekmar AquaTek-70, 02064001 Tekmar 3100, 01039005	HP 6890, 3501A02458	Mar.01	VOA-08
		HP 5890, 3235A58416	Tekmar AquaTek-70, 02064001 Tekmar 3100, 02056029	HP5972, 3341A01348	Jun.02	VOA-09
		HP 5890E, 3336A9270	Tekmar AquaTek-70, US02214002 Tekmar 3100, US02247016	HP5972A, 3501A02458	Nov.02	VOA-10
		Agilent 6890, CN10606026	Tekmar AquaTek-70, US06090004 Tekmar Velocity XPT 6101005	Agilent 5975, US60532280	May.06	VOA-11
		Agilent 6890, CN10640010	EST Encon 8100, 14704	Agilent 5975, UN62733842	Jan.07	VOA-12
		Agilent 7890A, CN10705024	Tekmar AquaTek70, US07206003 Tekmar Stratum, US07155002	Agilent 5975C, US71236028	Nov.07	VOA-13
		Agilent 7890A, CN10723034	Tekmar AquaTek70, US07262001 Tekmar Stratum, US08318011	Agilent 5975C, US71236319	Nov.07	VOA-14

VOC Screener w/ Dual FID	1	HP 6890, US00030201	HP 7683, US02914395 HP 7683, US02008318	HP FID, no serial number HP FID, no serial number	May.01	Screener
Ambient Air GC	1	Agilent 7890A		Agilent FID/TCD	May.10	GC-28
Ambient Air GC/MS	2	Varian CP-3800	Lotus LN2 Cryotrap System	Varian 4000 Ion Trap	Oct.08	MSAIR01
		Varian CP-3800	Lotus Ultra-Trace Toxics System	Varian 4000 Ion Trap	Feb.11	MSAIR02

Semivolatile Organics	Total#	Instrument Model & Serial Number	Autosampler Model & Serial Number	Detector Model & Serial Number	In Service	SYS_ID
GC-FID	5	HP 5890E, 3336A56635	HP 7673, 3237A32121		Apr.92 p/t	GC-14
		HP 5890E, 3336A56636	HP 7673, 312A28385		Feb.95	GC-15
		HP 5890A, 3033A30233	HP 7673, 3207A29781		Feb.02	GC-17
		Agilent 6890N, CN10553083	Agilent G2614A, CN60938729		Nov.06	GC-26
		Agilent 7890A, CN10803046	Agilent 7683B, CN81147720		Dec.08	GC-27
GC w/ Dual FID	1	HP 5890E, 3336A51743	HP 7673, 3027A29781		Dec.01	GC-20
GC w/ Headspace TCD-FID	1	Agilent 6890N, CN10414063	Gerstel CTC Analyzer, 124567		Oct.04	GC-24
GC w/ Dual ECD	6	HP 5890A, 2843A20040	HP 7673A, 2843A11544	HP 19233, F1687 HP 19233, L3548	Oct.90	GC-06
		HP 5890A, 3235A43989	HP 7673, 3207A29781	HP G1223A, F4791 HP G1223A, F4949	Jun.97	GC-16
		Varian CP-2800, 08829	Varian CP-8400, 12574B	ECD D1498 ECD A13873	Jul.02	GC-21
		Varian CP-3800, 10300	Varian CP-8400, 01820	Varian 02-001972-00/A14314 Varian 02-001972-00/A14468	Jun.03	GC-22
		Varian CP-3800, 11251	Varian CP-8400, 05799	Varian 02-001972-00/A14313 Varian 02-001972-00/A14314	Jun.04	GC-23
		Varian CP-3800, 11648	Varian CP-8400, 127170	Varian 02-001972-00/A14313 Varian 02-001972-00/A13873	Dec.04	GC-25
HPLC/ UV-VIS & Fluorescence	2	Agilent 1100, DE43645328	Agilent 1100, DE43628577	Ag.G1315B, DE43623281 Ag.G1321A, DE43606748	Feb.05	HPLC-04
		Agilent 1200, DE60555649	Agilent G1329A, DE60555496	Ag.G1321A, DE60555405 Ag. G1315B, DE60555240	Oct.06	HPLC05

BNA - GCMS	7	HP 5890, 3121A35677	HP 7673, 3442A40450	HP 5971, 3118A02337	Aug.91	BNA02
		HP 6890, US00011320	HP 7673, 3237A3121	HP 5973, US80110918	Jun.97	BNA03
		HP 5890, 3336A56592	HP 7673, 3120A26239	HP 5972, 3435A01840	Jul.00	BNA04
		Ag 6890N, US10233076	Ag 7683, CN23226594	Ag 5973N, US21843716	Oct.02	BNA05
		Ag 6890N, CN10335028	Ag 7683, CN33332145	Ag 5973, US33246067	Nov.03	BNA06
		Ag 6890N, US10526035	Ag 7683, CN52425771	Ag 5975, US52430328	Sep.05	BNA07
		HP 5890, 3240G19183	HP 7673, 3003A22312	HP 5971, 3341A01386	Sep.05	BNA08
		Ag 7890A, CN10705011	Ag 7683, CN71439865	Ag 5975C, US71435742	Nov.07	BNA09

Metals	Total#	Instrument Model & Serial Number	Autosampler Model & Serial Number	Detector Model & Serial Number	In Service	SYS_ID
CVAA Mercury Analyzer	2	Leeman Hyrdra AA, 112-0064-1/62541, 2003			May.06	MET-14
		Leeman Hyrdra AA II, 1026			Apr.11	MET-34
ICP-MS	2	Agilent 7500ce, JP51201547			Apr.06	MET-06
		Agilent 7500ce, JP51201930			May.07	MET-16
		Agilent 7500ce, JP82802843			Apr.09	MET-26
Axial/Radial ICP Spectrometer	2	Perkin-Elmer Optima 5300DV, 077N5071902			Oct.04	MET-08
		Perkin-Elmer Optima 5300DV, 077N5033101			Apr.06	MET-09

General Chemistry	Total#	Instrument Model & Serial Number	Autosampler Model & Serial Number	Detector Model & Serial Number	In Service	SYS_ID
UV-Vis Spectrophotometer	2	Perkin-Elmer Lambda 25, 101N5091105			Dec.05	PE
		Hach DR2800, 1192969			Feb.07	DR
Conductivity Meter	2	VWR Multi-meter, 51282622			Mar.97	EC
		Fisher "Traceable", B12443			Feb.02	EC2
Dissolved Oxygen Meter	1	Orion 97-08, Beckman 250, 3526			Jun.06	DO
Ion Chromatograph	4	Dionex DX-120, 98040436	Dionex AS-40, 98040181	DS4-1, 98040631	Jan.00	IC01
		Dionex DX-320, 01070420	Dionex AS-50, 01060456	AD 25, 00121073	Nov.01	IC02
		Dionex DX-120, 03020263	Dionex AS-40, 0709721	DS4-1, 03010789	Apr.03	IC03
		Dionex ICS-2000, 07090437	Dionex AS-40, 03030608	DS6, 07090526	Nov.07	IC04
Ion Selective Electrode	1	OAKTON Ion6, 1427068, ACCUMENT, 8294047P			Nov.97	ISE

Organic Carbon Analyzer	2	Tekmar-Dorman Phoenix 8000, Model 17-7045-200, US03085005	Apr.03	TOC1
		Tekmar-Dorman Phoenix 8000, Model 17-7045-200, US06060005	May.06	TOC2
pH Meter	1	Orion 420A, 9107BN	Sep.00	Orion-420
Auto-titrator	2	25mL, BRAND GMBH, 02D5449	Jun.07	TKN-1
		50mL, BRAND GMBH, 05D0625	Jul.06	ALK-1
Turbidimeter	1	HACH 2100N, 08080C024224	Dec.08	TB
Midi-Distillation System	3	Andrews Glass, 110-10-R, AIZ0301	Sep.01	Midi-1
		Andrews Glass, 110-10-R, A7W0122	Dec. 08	Midi-2
		Andrews Glass, 110-10-PA, 17T0172	Dec. 08	Midi-3
Automated H.E.M System	1	Horizon SPE-DEX 3000XL, 08-2134	Jan.03	1664

Radiochemistry	Total#	Instrument Model & Serial Number	Autosampler Model & Serial Number	Detector Model & Serial Number	In Service	SYS_ID
Gamma Spectroscopy System	14	ORTEC Beryllium Window HPGe			2012	
Alpha/Beta Gas Proportional Counter	1	Protean WPC 1050			2012	
Alpha Spectrometer System	1	ORTEC			2012	

Data Systems		
GC/MS and Chromatography	8	HP Chemserver
Chromatography	29	Agilent EZ Chrom
	1	HP Chemstation
	1	Dionex Peaknet
Laboratory IMS	32	C&T Sun V40Z / Oracle 10gR2
PC-LAN network	32	Novell/ Windows NT - Yossarian

Note: List does not include support equipment (thermometers, hot plates, digestion blocks, balances, etc.).

* p/t = 'Prior To'

APPENDIX_4: C&T Laboratory Personnel

August 2013

Name/ Title	Organics/ Metals Sample Prep	Organic Analysis by GC	Organic Analysis by GCMS	Organic Analysis by HPLC	Inorganic Analyses by IC	Inorganic Analysis by ICP	General Chemical Analyses	Sample Management	Project Management	Laboratory Management	LIMS/Data Management	Degreed (BS or BA)	Advanced Degree	Years Experience
Bruce Godfrey - President/Lab Director	x	x	x	x	x	x	x	x	x	x	x	x	x	33
Stefan D'Angona - Technical Director	x	x	x	x	x					x		x		13
Teresa Morrison - QA Director	x	x	x	x			x	x	x	x	x	x		24
Cheryl Bowden - Operations Manager	x	x		x	x					x		x		9
John Goyette – Sr Program Manager	x							x	x	x	x			26
Chris Katayanagi - IT Director	x	x	x	x						x	x	x		22
Quality Control & LIMS														
Evonne Haik - QC Chemist	x	x				x		x	x			x		27
Lara Wheeling - QC Chemist	x	x	x									x		19
Porter Williams - Metals Data Review						x				x		x		4
Matt Carroll - Information Management		x									x	x		7
Dan McGee - Information Management	x	x									x	x		7
Client Services														
Adnan Ahmad - Sample Control								x				x		1
Ian Amberson - Courier												x		0
Tracy Babjar - Project Manager	x	x				x	x	x	x			x		19
Isabelle Choy - Project Manager								x	x			x		2
Mike Dahlquist - Project Manager	x		x					x	x			x		6
Miguel Garcia - Sample Control												x		0
Rick Grams - Shipping/ Bottle Prep								x						9
Sean Salvador - Sample Control								x						0
Will Rice - Project Manager	x	x					x	x	x			x		3
Volatile Organics														
Zia Ahmad - Chemist	x											x		15
Dina Ali - Chemist		x										x		1
Matt Bacinskas - Chemist		x	x		x		x					x		9
MaryAnn Concepcion - Chemist		x					x					x		1
Chris Doorbos - Chemist	x	x	x									x		4
Kari Martinez - Chemist	x	x										x		4
Blair Okuma - Chemist	x	x	x		x					x		x		14
Damien Reggio - Chemist			x									x		1
Mai Chi Tu - Chemist		x	x									x		26
Troy Windsor - Analyst	x	x	x					x		x				21
Extraction Lab														
Michael Borscheid - Chemist	x											x		0
Tiffany Burkhart - xlab Group Leader	x	x										x		5
Aaron Greiner - Analyst	x							x						9
Cory Jacob - Technician														0

Name/ Title	Organics/ Metals Sample Prep	Organic Analysis by GC	Organic Analysis by GCMS	Organic Analysis by HPLC	Inorganic Analyses by IC	Inorganic Analysis by ICP	General Chemical Analyses	Sample Management	Project Management	Laboratory Management	LIMS/Data Management	Degreed (BS or BA)	Advanced Degree	Years Experience
Iris Kan - Chemist	x											x		1
Colin Kruse	x											x		0
Eileen Leung - Sample Control	x							x				x		1
Justin Richardson - Analyst	x													0
Mike Wallace - Chemist	x											x		1
Semivolatile Organics														
Myra Anderson - Analyst	x											x		1
Takashi Brown - Chemist		x										x	x	5
Jonee Galvez - Chemist	x	x		x								x		7
Kristine Harrison - Chemist	x	x										x		8
Liza Hernandez - Chemist	x	x	x	x								x		19
Sandra Luna - Analyst	x	x												8
Edward McCaskey - Chemist	x		x	x						x		x		29
Metals														
Justin Buehner - Chemist						x	x					x		3
Nicole Dougherty - Analyst	x													0
Adam Hackett - Chemist				x		x						x		7
Matt Newton - Chemist	x											x		0
Casper Thommes - Chemist						x						x		1
Nguyen Tran - Chemist						x						x		1
Victor Vergara - Technician	x													15
Marte Villanueva - Technician	x							x						11
General Chemistry														
Raquel De Guzman - Analyst	x													12
Dennis Dougherty - Wet Chem Mgr	x		x		x	x	x			x		x		27
Vidia Qarshi - Chemist							x	x				x		2
Dennis McCanna - Chemist	x	x			x		x			x		x		48
Kevin Riley - Chemist	x						x					x		7
Nate Topie - Chemist							x	x				x		0

HPS Lab	**Sample Prep**	**Gamma Spec**	**Alpha/Beta Spec**	**Degree**	**Years Exp**
Robin Fluty Supervisor	x	x	x	x	5
Phil Smith, Supervisor	x	x	x	x	3
Andrew Alexander	x	x	x	x	8
Jonn Alexander	x	x	x	x	8
Chris Fluty	x	x	x	x	7
Eric Schrader	x	x	x	x	7

Degree = BA/BS in various science disciplines
Advanced Degree = MA, MS, MBA, or Ph.D.

APPENDIX B

Isotech Laboratories, Inc. Quality Assurance Plan

QUALITY ASSURANCE PLAN

for

Isotech Laboratories, Inc.
1308 Parkland Court
Champaign, IL 61821

Revised March 22, 2012

_____

General Manager Date

_____

QC Manager Date

_____

Lab Manager Date

GENERAL QA/QC PROCEDURES 3

1. SAMPLES 3
1.1 Sampling Procedures 3
1.2 Sample Containers 3
1.3 Sample Custody 3

2. INSTRUCTIONS AND PROCEDURES 3
2.1 Instrument Operation Procedures 3
2.2 Analytical Procedures 3

3. CALIBRATION AND STANDARDIZATION 4
3.1 Calibration Procedure and Frequency 4
3.2 Method Validation 4
3.3 Check/Reference Samples 4
3.4 Standards 4
3.5 Duplicate Samples 4
3.6 Specific Routine Procedures to Assess Performance 4
3.7 External Quality Control Checks 5

4. ANALYSES AND ANALYTICAL RESULTS 5
4.1 Data Reduction and Reporting 5
4.2 Hard Copy and Electronic Data Deliverables 5
4.3 Documentation 5
4.4 Hard Copy Data Files and Storage 6

5. MAINTENANCE AND REPAIR 6
5.1 Instruments 6
5.2 Other Equipment 6

6. REVIEW 6
6.1 Analytical Review 6
6.2 Standard Operating Procedures (SOP's): 7

7. QA/QC PROBLEM REPORTING 7
7.1 Responsibilities 7

8. SUBCONTRACT POLICY 7

APPENDICES: ANALYTICAL PROCEDURES 8

I. Sample Preparation Procedures for Stable Isotope Analyses 8
A. Procedures for Stable Isotope Analysis of Water Samples 8
1. $\delta^{13}C$ (Carbon Isotope Analysis) of Dissolved Inorganic Carbon (DIC) 8
2. δD (Hydrogen Isotope Analysis) and $\delta^{18}O$ (Oxygen Isotope Analysis) of H_2O 9
3. $\delta^{15}N$ and $\delta^{18}O$ (Nitrogen and Oxygen Isotope Analysis) of Dissolved Nitrate 9
4. $\delta^{34}S$ & $\delta^{18}O$ (Sulfur and Oxygen Isotope Analysis) of Dissolved Sulfate 12
B. Procedures for Stable Isotope Analysis of Gas Samples 12
1. $\delta^{13}C$ and δD (Carbon and Hydrogen Isotope Analysis) for Hydrocarbon Gases, Offline Prep Systems 12
2. $\delta^{13}C$ (Carbon Isotope Analysis) of CO_2, Offline Prep Method 14
3. GC-C-IRMS systems, $\delta^{13}C$, δD, and $\delta^{15}N$ 14
C. Procedures for Stable Isotope Analysis of Organic Solids and Liquids 14
1. ^{13}C & $\delta^{18}O$ (Carbon and Oxygen Isotope Analysis) of Carbonate 15
2. Organic Solids and Liquids $\delta^{13}C$, $\delta^{18}O$, $\delta^{15}N$, $\delta^{2}H$ and $\delta^{34}S$ 16

II. Sample Preparation Procedures for Radiogenic Isotope Analyses **16**
A. Procedures for Radiogenic Isotope Analysis of Gases 16
1. ^{14}C (Radiocarbon) and ^{3}H (Tritium) in CH_4 (Methane) 16
3. ^{14}C (Radiocarbon) in CH_4 and CO_2 by Accelerator Mass Spectrometry (AMS) 18
B. Procedures for Radiogenic Isotope Analysis of Water 19
1. ^{14}C (Radiocarbon) in dissolved inorganic carbon (DIC) by Accelerator Mass Spectrometry (AMS) 19
2. ^{3}H (Tritium) in H_2O 19

III. Dual Inlet Mass Spectrometric Analysis **21**
A. Measurement of $^{13}C/^{12}C$ and $^{18}O/^{16}O$ in CO_2 21
B. Measurement of $^{2}H/^{1}H$ (Deuterium/Hydrogen) in H_2 22

IV. Gas Chromatographic Analysis of Gases **24**
A. Analysis of hydrocarbons 24
B. Analysis of fixed gases 25

V. Radiocarbon Analysis of Prepared Samples **27**

GENERAL QA/QC PROCEDURES

1. SAMPLES

1.1 Sampling Procedures It is the responsibility of the person collecting a sample to follow a sound sampling procedure. This will ensure that the sample collected is representative of the whole. We at Isotech will provide advice on sampling methods, sample storage procedures, and sample size requirements.

1.2 Sample Containers Sample containers should be matched in size, type and condition to the anticipated analysis that will give best representation of the source, while preserving the sample integrity prior to analysis. Unless sample containers are provided by Isotech, the responsibility for adequate containers resides with the client. Again, in addition to being able to provide appropriate sample containers, shipping cartons and shipping instructions, Isotech will provide advice on sample containers/cartons and shipping procedures.

1.3 Sample Custody A completed "Chain of Custody" record is the responsibility of the client and, if required, should be submitted with the samples. Isotech will provide a "Chain of Custody/Request for Analysis" form if needed. Isotech assumes full responsibility for all samples received and stored for analysis at our laboratory. If any samples are removed from Isotech for additional analysis at other laboratories, a "Chain of Custody" form will be completed. All samples received for analysis are assigned a unique, non-duplicated laboratory number which is used as an identifier for each analysis performed.

2. INSTRUCTIONS AND PROCEDURES

2.1 Instrument Operation Procedures Analyses performed with manufactured analysis instruments are carried out by the methods either specified or recommended by the manufacturer of the instrument as identified in the instrument manual or provided by on-site training through the manufacturer's service technicians. Much of the operation of these instruments is controlled by personal computers utilizing software written and licensed by the manufacturers.

2.2 Analytical Procedures The analytical procedures used routinely at Isotech are described in written standard operating procedures (SOP's) for each analysis. Additional procedures may be used, as needed, in the process of satisfying a client's specific analysis requirements. These procedures will either follow published analytical methods, or methods developed at Isotech for a specific analysis. If the Isotech developed procedure becomes routine, then a standard operating procedure is written. All procedures are reviewed and approved by the laboratory supervisors. Various procedural tests and verifications performed are recorded in bound maintenance log books.

3. CALIBRATION AND STANDARDIZATION

3.1 Calibration Procedure and Frequency Depending on the analytical technique, instruments used for quantitative analyses are either calibrated at the beginning of every operating period or the calibration is checked by using a reference sample or a calibration standard. The instrument calibration is also checked at appropriate intervals during analyses. Specific instruments that form components of a sample preparation system are calibrated using duplicate sample analysis as well as analysis of a reference sample at appropriate intervals. Records of calibration results are kept in laboratory notebooks or other secure medium (see Documentation).

3.2 Method Validation Analytical methods are validated by one or more of the following techniques:

3.2.1 check or reference samples are analyzed and the results are compared with the internal documented or external certified (primary and secondary standards) values,

3.2.2 results from the candidate method are compared with those from another method known to be applicable and reliable, or

3.2.2 spiked samples and surrogate samples are analyzed and the method results are compared with the known concentrations.

3.3 Check/Reference Samples A check/reference sample is analyzed approximately every tenth analysis. This, in essence, results in a test of the method. Check/reference samples are chosen which have been analyzed multiple times over an extended period of time with consistent results.

3.4 Standards Primary standards are obtained from the International Atomic Energy Agency, Vienna, Austria, and certified by NIST (National Institute of Standards and Technology, formerly U.S. National Bureau of Standards) or directly from NIST. Secondary standards are obtained from commercially available sources recognized in the industry. Internal Reference standards are prepared by direct calibration against primary and secondary standards.

3.5 Duplicate Samples Duplicate analyses are performed approximately every tenth analysis. This duplicate sample analysis is performed approximately five analyses after the check/reference sample analysis is performed. Therefore, for a particular analysis procedure, a test of the method is performed every five analyses. This assures that at least 20% of all analyses are for maintaining QA/QC.

3.6 Specific Routine Procedures to Assess Performance Standard reference samples, chosen to match the submitted samples as closely as possible, in conjunction with duplicate samples and check samples, provide a matrix for performance evaluation. If a problem is detected with

the reference sample, then the problem is first addressed by checking the integrity of the sample itself. Other reference samples are analyzed to determine if the problem persists. If reference sample integrity is verified, further diagnostic testing is carried out until the cause of the discrepancy is identified.

Isotech willingly participates in round-robin testing whenever the opportunity arises and has participated in studies by IAEA and industry. Instrument calibration is carried out whenever analysis of internal standards and check samples suggests a potential problem.

3.7 External Quality Control Checks Blind duplicates, check samples, blanks, and spiked samples may be submitted by the client, and this practice is encouraged.

4. ANALYSES AND ANALYTICAL RESULTS

4.1 Data Reduction and Reporting Calculations made in reducing raw data to reportable form are verified (preferably by a second person) before reporting the results to the client. If a computer program is used to perform calculations, the accuracy of the input data is verified by comparison with the raw data. In all cases where computer programs are used to make the calculations, the person making the calculations verifies that the proper program is used. Data reduction and calculation is performed automatically by the computers which control the instruments. Reported results are verified relative to the computer printouts.

4.2 Hard Copy and Electronic Data Deliverables Normally, final data is emailed to clients as an Excel workbook file, and also a PDF version of the data. Depending on the sample type, hard copy reports can be either a single page per sample, or can be in tabular format with multiple samples per page. Hard copy reports are not mailed to clients, unless clients specifically request them. Upon request, CD's will be submitted to clients in addition to the hard copy reports. Also, appropriate graphs will be provided upon request. Compositional analyses for natural gas samples are normalized when the Analysis Report is generated. Upon request a QA/QC report containing results for all check samples and duplicates as well as copies of raw data can be provided at additional cost.

4.3 Documentation All laboratory notes, observations, calibrations, manual calculations, and any other pertinent information are kept in bound laboratory notebooks or other secure recording medium. Computer programs used for data storage, retrieval, and calculations, which are developed within Isotech Laboratories, Inc., are documented well enough that someone not intimately familiar with the program development, but who is familiar with the programming language, can understand the operation of the program. Printed and dated copies of the current version and each previous version (insofar as possible) of the program are kept in the developer's files. These copies remain at and are the property of Isotech, should the developer leave employment of Isotech Laboratories, Inc. Electronic backup copies of currently-used computer programs are securely kept by the program's developer or principal user. Backup copies of analyses databases are made periodically. The frequency of making backup copies

depends on the frequency of updating the database, but the minimum frequency for making backup copies is weekly. All laboratory notebooks, data, computer programs, computerized databases, and any other means of recording data, observations, calculations, and other pertinent information developed at or on behalf of Isotech, remain the property of Isotech Laboratories, Inc., unless otherwise designated.

4.4 Hard Copy Data Files and Storage All pertinent paperwork associated with each batch of samples is stored in the client files. Typical paperwork can include chain of custody records, client analysis requests, email communication to/from clients regarding samples, final data, and cover letter mailed to client with final data. Data files are kept indefinitely unless clients request that we dispose of them.

5. MAINTENANCE AND REPAIR

5.1 Instruments Each instrument or machine used to produce quantitative analysis results, or leading up to their production, undergoes periodic preventive maintenance according to manufacturer's instructions, or some established preventive maintenance schedule. Preventive maintenance may be done by laboratory personnel, manufacturer's representative, or a qualified third-party contractor, depending on the abilities of the laboratory operator and the complexity of the equipment. Records of repairs and preventive maintenance are kept by the appropriate laboratory personnel in files or notebooks. Records of equipment problems and solutions are kept in files or notebooks. The analyst is the person best qualified to recognize when the instrument or machine they operate is in need of repair, or the method they practice is in need of corrective action. Corrective action is needed when predetermined limits for data acceptability are exceeded. Analysts are also to use their experience and scientific judgment in deciding when corrective action is needed.

5.2 Other Equipment Other laboratory equipment such as vacuum pumps, ovens, test meters and non-instruments such as glassware are maintained by Isotech personnel. In most cases this is performed by the same person who utilizes the equipment for analysis. Visual checks backed by mechanical and electronic gauges provide constant maintenance checks directly to the operators.

6. REVIEW

6.1 Analytical Review At the time of each analysis or sample preparation, the staff chemist performing the analysis reports anomalies to the QC Manager. Staff chemists are all trained on a variety of techniques and work closely together. Constant communication between staff members results in most problems being addressed when they occur. Unusual problems are brought to the attention of the management team. Whenever possible, a sample that is questionable for any reason is re-analyzed to verify results, regardless of when the sample

was analyzed initially. This means that more than 10% of samples will be duplicates if the data appears to be unusual in any way.

Before final reports are printed, data is checked to verify that the final data agrees with the raw printouts, and raw percentages for compositional analyses are checked to ensure that all components are identified. Reproducibility of duplicate isotopic samples is compared to stated precision limits. Analytical data is reviewed for anomalies by project coordinators and/or managers.

6.2 Standard Operating Procedures (SOP's): These procedures are developed from specific analytical methods for operating specified equipment to obtain high quality data reflective of each sample analyzed. In addition to revisions due to procedural or equipment changes these SOP's are reviewed by the QC Manager annually.

7. QA/QC PROBLEM REPORTING

7.1 Responsibilities QA/QC is the responsibility of every person who collects or analyzes samples. If any Isotech Laboratories employee observes any QA/QC problem, that employee will discuss the problem with the analyst, QC Manager, Lab Manager or General Manager. No negative action will ever be brought against nor will accrue to any staff member who reports QA/QC problems.

8. SUBCONTRACT POLICY

Samples for analysis of ^{14}C (radiocarbon) are converted to purified carbon dioxide and then submitted to an established radiocarbon dating laboratory for the final analysis. When analyses are requested for which Isotech does not have either the necessary equipment or expertise to provide high quality results, these analyses too may, with the knowledge of the client, be submitted to a subcontract laboratory. Only established, reputable laboratories which maintain strict QA/QC control are utilized. All samples are prepared and packaged using techniques that have been recommended or approved by the subcontract laboratory. Analysis of reference samples and standards is the responsibility of the subcontract laboratory. Duplicate analyses of samples submitted to a subcontract laboratory should be requested by the client and will be charged as regular samples.

APPENDICES: ANALYTICAL PROCEDURES

I. Sample Preparation Procedures for Stable Isotope Analyses

A. Procedures for Stable Isotope Analysis of Water Samples

1. $\delta^{13}C$ (Carbon Isotope Analysis) of Dissolved Inorganic Carbon (DIC)

Equipment and Supplies

Thermo GasBench II
Thermo Delta V Plus
12mL Exetainer® with septum cap
Micro spin bar
1mL syringe
23G needle
85% Phosphoric acid
0.1N HCl

Method/Procedure The $\delta^{13}C$ of DIC is determined by injecting up to 1 ml of sample water into a helium flushed 12mL Exetainer® containing 0.1mL of 85% phosphoric acid and a magnetic spin bar. Sample size is determined based on alkalinity, which is measured by titration with 0.1N HCl.

The sample is stirred for a minimum of one hour and then allowed to equilibrate for 24 hours. At time of analysis the sample vials are placed in the GasBench tray. The CO_2 generated is flushed out of the vial via a two port needle. Water is removed by two nafion traps, and pure CO_2 is separated using a GC column. The CO_2/helium mixture then enters the mass spectrometer and is compared against a reference standard a total of six times.

Maintenance Vials are recycled and the spin bars are thoroughly cleaned and reused. Gas flow rates through the GasBench system are periodically checked.

QA/QC At a minimum, every tenth analysis is a replicate. A check standard is analyzed every tenth analysis.

Calculation Calculations are performed by the software on the IRMS (Isotope Ratio Mass Spectrometer) at the time of analysis. Data normalization against internal lab standards is performed using Microsoft Excel.

Documentation All procedural tests and verifications performed are recorded in bound maintenance log books. All sample data including the date prepared with analyst identification are recorded on laboratory log sheets and in bound log books.

2. δD (Hydrogen Isotope Analysis) and $\delta^{18}O$ (Oxygen Isotope Analysis) of H_2O

Equipment

3mL syringes
0.2 micron syringe filters
2mL glass vials with septum caps
Picarro CRDS (cavity ringdown spectrometer) model L1102-i fitted with a Leap autosampler

Method/Procedure Water samples are individually filtered into 2mL vials with 0.2 micron syringe filters. If samples are high salinity brines, they should be vacuum distilled prior to loading. The vials are then loaded onto trays which are installed on the autosampler. Samples are analyzed by the CRDS in replicate in accordance with the manufacturer's recommendation.

QA/QC Two reference water samples are used to verify accuracy and reproducibility. These reference waters are analyzed approximately every tenth analysis. The system is calibrated by analysis of primary reference standards obtained from IAEA or NIST. At a minimum, every tenth sample analysis is a replicate.

Calculation Calculations are performed by the software on the CRDS at the time of analysis. Data normalization against internal lab standards is performed using Microsoft Excel.

Documentation All procedural tests, sample preparations and verifications performed are recorded in bound maintenance log books. All final data including the date prepared with analyst identification in bound log books.

3. $\delta^{15}N$ and $\delta^{18}O$ (Nitrogen and Oxygen Isotope Analysis) of Dissolved Nitrate

Equipment and Supplies

0.45 nylon filter paper
Glass filtration apparatus
1N HCl
$BaCl_2$
Cation exchange resin
Anion exchange resin
1N HBr
Ag_2O
Flasks

Stirbars
Freezer
Oven
Freeze-dryer
Teflon beakers
Thermo Delta V Plus
Mettler Toledo MX5 Ultra-Microbalance
Thermo TC/EA
Thermo ConFlo II

Method/Procedure Nitrate is extracted from groundwater samples and converted into $AgNO_3$ using ion-exchange techniques. The nitrate concentration is determined using an Orion AquaFAST ™ colorimeter. The appropriate sample size is filtered and placed on a hot plate to boil. The pH is adjusted to 1-3 using 1N HCl. $BaCl_2$ is added to remove dissolved sulfates, and the sample volume is decreased to 250mL. Precipitated $BaSO_4$ is filtered from the sample and placed into separatory funnels. The sample is allowed to flow through a cation column and then through the anion column, where nitrate is held within the column. 1N HBr is added to the column to strip the nitrate. The eluent is collected and silver oxide is added to create $AgNO_3$. The sample is filtered, frozen in a Teflon beaker, and placed in a freeze drying vacuum oven until only the $AgNO_3$ crystals remain. The crystals are then analyzed using for $\delta^{15}N$ using an EA-IRMS and analyzed for $\delta^{18}O$ using a TC/EA-IRMS system.

Analysis of $\delta^{15}N$ is performed using a Carlo Erba Elemental Analyzer. 1.2 milligrams of $AgNO_3$ is weighed into tin boats and placed in an Autosampler with helium purge. The sample is flash combusted inside the combustion reactor, as shown in this reaction $N + O_2 \rightarrow N_xO_y + N_2$. The products of combustion reaction are then carried to the reduction reactor where excess oxygen is removed, and nitrogen oxides (N_xO_y) are reduced to elemental nitrogen (N_2). The N2 gas is introduced to the IRMS through a ConFlo II interface. Sample values are referenced against international standards.

Analysis of $\delta^{18}O$ is performed using a Thermo TC/EA. 300 micrograms of $AgNO_3$ is weighed into silver boats and placed in a zero blank autosampler. The sample is thermally converted to CO gas in the EA furnace. The CO gas is introduced into the IRMS through a ConFlo II interface. Sample values are referenced against international standards.

Maintenance Glassware is washed and rinsed with deionized water to remove residual sample and residual $AgNO_3$.

QA/QC At a minimum, every tenth sample preparation is a duplicate. Approximately every tenth EA/TCEA analysis a set of standards is analyzed after every ten samples, along with at least one check standard per analysis run.

Calculation Calculations are performed by the software on the IRMS (Isotope Ratio Mass Spectrometer) at the time of analysis. Data normalization against primary international standards is performed using Microsoft Excel.

Documentation All records of sample preparation and notes are hand written in bound log books. All sample data including the date prepared are stored electronically and in print.

Sample Handling Samples should be collected and frozen until analyzed. Samples should be shipped overnight in a cooler on ice. Filtering prior to shipment is preferred but is not required.

4. $\delta^{34}S$ & $\delta^{18}O$ (Sulfur and Oxygen Isotope Analysis) of Dissolved Sulfate

Equipment and Supplies

Thermo Delta V Plus
Mettler Toledo MX5 Ultra-Microbalance
Elementar Vario EL
Thermo TC/EA
Thermo ConFlo II
Thermo AQUAFast II ™ Colorimeter
0.45 micron nylon filter
1N HCl
$BaCl_2$ solution
Filtering apparatus
Various sized beakers
Drying oven
Petri dishes
Tin boats
Silver boats

Method/Procedure The $\delta^{34}S$ & $\delta^{18}O$ of dissolved sulfate is determined by the barium sulfate precipitation technique. Prior to preparation the sulfate concentration must be obtained from the client or determined using a Thermo AQUAFast II ™ colorimeter; a minimum sulfate concentration of 5ppm is required for this analysis. Once the sulfate concentration is known, the amount of sample needed to obtain 25mg of barium sulfate is weighed into a clean beaker. Samples are then filtered to remove particulate matter before being brought to a boiling temperature. Calcium carbonate in the sample is removed by adding 1N hydrochloric acid until the sample reaches a pH of 1-3. An appropriate amount of barium chloride solution is added based on the concentration of sulfate in the sample. The reaction is given sufficient time to complete under heat; a testing solution is used to ensure that all dissolved sulfate has precipitated. The precipitant is then filtered and dried, the final amount is weighed.

The $\delta^{34}S$ of the dried barium sulfate is then determined by combustion to SO_2 gas using an Elementar Vario EL EA. Approximately 1.2mg $BaSO_4$ is weighed into a tin capsule and loaded into an autosampler. The sample is then combusted and passed over a reduction furnace. The resulting SO_2 gas is passed through a ConFlo II interfaced to the IRMS, where it is compared against a reference gas.

Analysis of $\delta^{18}O$ is performed using a Thermo TC/EA. Approximately 300 micrograms of $BaSO_4$ is weighed into silver boats and placed in a zero blank autosampler. The sample is thermally converted to CO gas in the EA furnace. The CO gas is introduced into the IRMS through a ConFlo II interface. Sample values are referenced against international standards.

Maintenance Glassware is washed and rinsed with deionized water to remove residual $BaSO_4$.

QA/QC At a minimum, every tenth sample preparation is a duplicate. Approximately every tenth EA/TCEA analysis a set of standards is analyzed after every ten samples, along with at least one check standard per analysis run.

Calculation Calculations are performed by the software on the IRMS (Isotope Ratio Mass Spectrometer) at the time of analysis. Data normalization against primary international standards is performed using Microsoft Excel.

Documentation All records of sample preparation and notes are hand written in bound log books. All sample data including the date prepared are stored electronically and in print.

Sample Handling Samples should be collected and stored at $4^{o}C$ until analyzed. Samples should be shipped overnight in a cooler on ice. Filtering prior to shipment is preferred but is not required.

B. Procedures for Stable Isotope Analysis of Gas Samples

1. $\delta^{13}C$ and δD (Carbon and Hydrogen Isotope Analysis) for Hydrocarbon Gases, Offline Prep Systems

Equipment and Supplies

3 SRI 8610C Gas chromatographs
Evacuated transfer system
Copper oxide combustion furnace
Dry ice
Isopropyl alcohol
Liquid nitrogen
Electronic manometer
Electronic vacuum gauge

Helium
Oxygen
Gas-oxygen torch

Method/Procedure The determination of carbon and hydrogen isotopic ratios for hydrocarbons in gas mixtures (e.g. natural gas) requires a sample preparation system capable of first separating the individual hydrocarbons and then quantitatively converting them into carbon dioxide (CO_2) and water for mass-spectrometric analysis. There are 2 systems utilized for processing natural gases. The systems employed are helium purged flow systems consisting of two major units.

The first unit consists of sample injection syringes, SRI 8610C gas chromatographs, a personal computer, and several flow-control valves. This configuration separates the hydrocarbon of interest from the sample and channels it into the combustion-collection unit. The second unit is the combined combustion-collection unit which includes quartz combustion tubes filled with cupric oxide (CuO), and vacuum lines. This system converts the hydrocarbon of interest into CO_2 and water, which are then collected and purified for isotopic analysis.

The water of combustion is transferred into a length of Pyrex tubing that has been sealed at one end and contains a weighed quantity of zinc turnings. The sample tube is sealed off for later mass spectrometric analysis. Similarly, the CO_2 is then transferred into Pyrex tubing and sealed off for later mass spectrometric analysis.

Maintenance The packed columns are baked at manufacturer's recommended temperature when peak separation decreases. At the end of every work day, O_2 is flowed through the copper oxide combustion furnaces to regenerate the CuO. Valve o-ring seals within the evacuated transfer system are replaced as necessary.

Reference Samples The system is tested by analyzing a reference sample every tenth analysis performed.

Replication A duplicate analysis of one of the samples is performed approximately every tenth analysis. This duplicate analysis is performed approximately five analyses after the reference sample analysis is performed. Therefore, a test of the system operation is performed every five analyses.

Calculation The expected yield is calculated form the injection volume and the hydrocarbon concentration

Documentation All procedural tests, sample preparations and verifications performed are recorded in bound maintenance log books. All final data including the date prepared with analyst identification are recorded on laboratory log sheets and/or in bound log books. Digital copies of all chromatograms are stored and backed up regularly.

2. $\delta^{13}C$ (Carbon Isotope Analysis) of CO_2, Offline Prep Method

Method/Procedure Preparation of samples for measurement of the $\delta^{13}C$ of CO_2 is performed on the same system as the hydrocarbons. The procedure is identical to that for the hydrocarbons, with two exceptions. First, CO_2 does not pass through a combustion furnace; gas is channeled directly from the GC outlet to the collection trap. Second, there is no water of combustion.

3. GC-C-IRMS systems, $\delta^{13}C$, δD, and $\delta^{15}N$

Equipment and Supplies

HP6890 GC interfaced to ThermoFinnigan Delta Plus Advantage
HP 6890/7890 interfaced to Thermo Scientific Delta V Plus
Customized autosampler

Method/Procedure The GC-C-IRMS systems, also referred to as "online" or "continuous flow", consist of an Agilent GC combustion unit interfaced with a mass spectrometer (Delta V Plus or Delta Plus Advantage), and are used to analyze the carbon isotopic value of hydrocarbon components in gas samples. Samples are injected into the GC split/splitless injector either manually, or using customized autosamplers. The hydrocarbon components are separated by the GC column, and each individual component slated for isotopic analysis is combusted in a combustion furnace supplied by the instrument manufacturer. The resultant CO_2 is introduced directly into the mass spectrometer, and Finnegan's Isodat software is utilized for peak detection and quantification.

Hydrogen isotopic values for methane are completed using the same system, but the gas is channeled through a high-temperature pyrolysis furnace instead of through the combustion furnace. The pyrolysis furnace converts methane into H_2 and carbon, and the H_2 gas is introduced directly into the mass spectrometer.

Nitrogen isotopic data for elemental nitrogen (N_2) is generated using the same system.

Maintenance Septa on the GC inlet system are replaced daily when the system is operational. Pyrolysis and combustion tubes are replaced as needed. Combustion tubes are oxidized daily during analysis sequences.

Reference Samples Reference gases are analyzed at the start of each analysis sequence, and then at least 10% of all analyses during a sequence are check samples.

Replication At least 10% of client samples are analyzed in duplicate.

C. Procedures for Stable Isotope Analysis of Solids and Liquids

1. $\delta^{13}C$ & $\delta^{18}O$ (Carbon and Oxygen Isotope Analysis) of Carbonate

Equipment and Supplies

Thermo GasBench II
Thermo Delta V Plus
Mettler Toledo MX5 Ultra-Microbalance
12mL Exetainer® with septum cap
100% Phosphoric acid

Method/Procedure The $\delta^{13}C$ and $\delta^{18}O$ of carbonate is determined by weighing approximately 200 micrograms of sample into an Exetainer® fitted with a septum cap. The vials are placed in a temperature controlled sample block at 70°C and flushed with helium to purge any air from the vial.

The sample is reacted with 100% phosphoric acid for a minimum of one hour and then analyzed. The CO_2 generated is flushed out of the vial via a two port needle. Water is removed by two nafion traps, and pure CO_2 is separated using a GC column. The CO_2/helium mixture then enters the mass spectrometer and is compared against a reference standard a total of six times.

Maintenance Vials are rinsed to remove acid and the glass is recycled.

QA/QC At a minimum, every tenth analysis is a replicate. A set of standards is analyzed after every ten samples, along with at least one check standard per analysis run.

Calculation Calculations are performed by the software on the IRMS (Isotope Ratio Mass Spectrometer) at the time of analysis. Data normalization against internal lab standards is performed using Microsoft Excel.

Documentation All procedural tests and verifications performed are recorded in bound maintenance log books. All sample data including the date prepared are stored electronically and in print.

2. Organic Solids and Liquids $\delta^{13}C$, $\delta^{18}O$, $\delta^{15}N$, $\delta^{2}H$ and $\delta^{34}S$

Equipment and Supplies

Carlo Erba Elemental Analyzer connected to a Finnigan Delta S Mass Spectrometer
ThermoElectron TCEA interfaced to a Thermo Electron Delta V Plus Mass Spectrometer
Elementar EL Vario III interfaced to a Thermo Scientific Delta V Plus Mass Spectrometer

Method/Procedure The determination of carbon, nitrogen, oxygen, hydrogen, and sulfur isotopic ratios for organic solids and liquids is accomplished by combustion or pyrolysis of the materials for mass-spectrometric analysis. The systems employed are standard elemental

analyzers with carousel auto samplers, connected to isotope ratio mass spectrometers through an interface supplied by the manufacturer. The combustion products of interest from the elemental analyzers are: carbon dioxide (CO_2) for carbon isotope analysis, N_2 for nitrogen isotope analysis, and sulfur dioxide (SO_2) for sulfur isotope analysis. Oxygen and hydrogen isotopic ratios are analyzed on the TCEA, which converts hydrogen from the organic materials to H_2 gas for hydrogen isotopic measurements, and oxygen within the organic materials is converted to carbon monoxide (CO) for oxygen isotope analysis.

Samples are weighed on a Mettler balance and loaded into a standard EA tin capsule for carbon, nitrogen, or sulfur isotopic analysis, or into a silver capsule for oxygen or hydrogen isotopic analysis. Once the samples are loaded into the EA, a run is started and all instrument control is done by software provided by the MS manufacturer. Samples are combusted as per normal EA operating procedures, and the CO_2 N_2, and SO_2 are separated by the EA. Similarly, the pyrolysis products H2 and CO from the TCEA are separated within the instrument. The vents of the EA and the TCEA are connected to the mass spectrometers via the interface, where a small portion of the EA or TCEA output flows directly into the MS. The MS measures the isotopic value of the component of interest (CO_2, N_2, SO_2, CO, or H_2) and the final isotopic value is generated by software provided by the manufacturer.

Maintenance Ash is removed from the top of the combustion column in the EA or the top of the pyrolysis reactor in the TCEA as directed by the manufacturer, or when peak tailing becomes apparent. Combustion and reduction furnaces in the EA are replaced at appropriate intervals as outlined by the dealer, or when peak shape deteriorates. The TCEA contains glassy carbon, which is periodically replaced.

Reference Samples The systems are tested by analyzing at least one reference at least once per batch of 25 samples loaded into the auto sampler. A blank is also run at the start of each batch.

Replication Approximately 10% of all samples analyzed are replicates.

Documentation All final data including the date analyzed are recorded on laboratory log sheets and/or in bound log books. Digital copies of chromatograms are stored and backed up regularly.

II. Sample Preparation Procedures for Radiogenic Isotope Analyses

A. Procedures for Radiogenic Isotope Analysis of Gases

1. ^{14}C (Radiocarbon) and ^{3}H (Tritium) in CH_4 (Methane) by Radiometric Analysis

Equipment

Peristaltic pump
Flow meters
Gas regulators
Vacuum gauge
Molecular sieve trap
High temperature tube furnaces
Quartz combustion chamber
Vacuum traps and gauges
Vacuum pumps
Mercury manometer

Method/Procedure

1.1 Methane Combustion

The system used for tritium (^3H) analysis of methane and for radiocarbon (^{14}C) analysis of methane consists of a peristaltic pump, a CO_2 removal unit, and a sample combustion/collection flow unit. The combustion/collection unit is composed of a tube furnace, a flow control valve, and a series of gas purification and collection traps. The system is attached to a vacuum manifold.

The gas sample enters the system through a flow control valve or is pumped in slowly by a peristaltic pump. The CO_2 associated with the sample is absorbed by the molecular sieve and removed from the sample quantitatively. Methane in the sample is then carried through the combustion tube where it is reacted to CO_2 and H_2O.

The water of combustion is collected in a trap immediately after the combustion furnace by immersing the trap in a dry ice/isopropanol bath. Once the entire sample has been combusted, the frozen water of combustion is melted and transferred to a glass vial to await tritium analysis.

The CO_2 formed by combustion is collected in two liquid nitrogen cooled traps, measured volumetrically, and transferred into a storage cylinder. Storage cylinders are effectively leak-tested during each use by evacuation prior to transferring the sample CO_2. Each cylinder is tagged with sample identification and is forwarded to a subcontractor for ^{14}C analysis along with a chain-of-custody form.

1.2 Tritium Analysis

The water of combustion from methane samples is ready to be analyzed in the liquid scintillation counter (LSC). There is no pre-treatment necessary for the sample, as it is essentially distilled water when it is collected.

The scintillation counting vials are prepared by pipetting 10 ml of commercial scintillation cocktail into a 20 ml plastic vial and then weighing to ±1 mg. The sample is

then pipetted or poured into the counting vial and the vial is re-weighed. If the amount of sample is less than 10ml, then tritium-free water is added to bring the total volume of water to about 10ml. Details of the tritium analysis procedure are given later in this document.

Maintenance After each sample, the molecular sieve is baked and evacuated at 350°C. The vacuum system is thoroughly evacuated to remove all residual gas and water vapor after each sample. The water trapping system is disassembled and thoroughly dried and evacuated after each sample.

Calibration/Standardization Gas storage volumes have been calibrated using known quantities of carbon dioxide gas. No further standardization of this system is necessary. Calibration and standardization of the final ^{14}C analysis is performed by the subcontracted laboratory.

Replication and Reference Samples Replicate or reference sample analysis for these analyses are performed only when requested and supported by the client.

Calculation Yields are calculated by comparing the volume of CO_2 generated and the weight of the water collected to the amount expected based on the amount of CO_2 collected. ^{14}C concentrations are determined by the subcontracted laboratory and corrected for isotope fractionation by Isotech's database program.

2. ^{14}C (Radiocarbon) in CH4 and CO_2 by Accelerator Mass Spectrometry (AMS)

Equipment:
Same as for $\delta^{13}C$ of CO_2 and $\delta^{13}C$ of Hydrocarbons.

Method/Procedure:
The same method is employed for sample preparation as for $\delta^{13}C$ of either CH_4 or CO_2. Once the purified CO_2 has been sealed into Pyrex tubing, the tube is tagged with a piece of label tape and sent to the subcontractor along with a chain of custody form for ^{14}C analysis. When there is only enough material available for one sample preparation, the $\delta^{13}C$ is first determined by MS analysis.

B. Procedures for Radiogenic Isotope Analysis of Water

1. ^{14}C (Radiocarbon) in dissolved inorganic carbon (DIC) by Accelerator Mass Spectrometry (AMS)

Equipment and Supplies

Vacuum pumps and gauges
Glass and metal vacuum system
Dry ice
Isopropyl alcohol
Liquid nitrogen
Phosphoric acid
Gas-Oxygen torch

Method/Procedure The ^{14}C of DIC is determined by injecting sample water into an evacuated serum bottle containing 2mL of 85% phosphoric acid and a magnetic spin bar. Sample size is determined based on alkalinity, which is measured by titration with 0.1N HCl. The sample is stirred for a minimum of 15 minutes and then connected to the vacuum system via a needle port. The CO_2 generated is liberated from the water and transferred through a trap cooled in a dry-ice/isopropyl-alcohol mixture (for H_2O removal) to a U-trap which is cooled in liquid nitrogen. The CO_2 is then purified and cryogenically collected in Pyrex tubing. The tube is sealed off and tagged with a piece of labeled and sent to the subcontractor, along with a chain of custody form, for ^{14}C analysis.

Maintenance The system is thoroughly evacuated between samples. Vials are washed and dried.

2. ^{3}H (Tritium) in H_2O

Equipment

Vacuum pumps and gauges
Distillation column
Electrolytic enrichment cells
Electrolysis power source and cooling system
Liquid scintillation counting system
Assorted chemicals and glassware
Dry ice/ isopropyl alcohol
Drying oven

Method/Procedure--Direct Counting of Higher Tritium Content Water (greater than 15 TU). Approximately 15ml of the water sample is treated with 0.1 M $KMnO_4$ at 70°C for about an hour. This sample is then vacuum distilled. Ten ml of the distillate is accurately weighed and mixed with 10ml of an appropriate organic scintillator cocktail in a 20ml plastic vial and counted in a liquid scintillation spectrometer for 1000 minutes. Background and a NIST standard are also similarly counted and the tritium content calculated.

Method/Procedure--Enrichment of Lower Tritium Content Water (less than 15 TU). About 300 ml of the water sample is conventionally distilled to near completion. Exactly 200g is added to an enrichment cell along with 2ml of 9M tritium-free sodium hydroxide and is electrolytically enriched down to about 11-13 ml (final weight is exactly determined), and then neutralized with carbon dioxide for 20 minutes. The enrichment procedure is carried out under conditions of about 2℃ and constant voltage of 4V. Ten ml of the enriched sample is accurately weighed and mixed with an appropriate organic scintillator cocktail in a 20 ml plastic vial and counted in a liquid scintillation spectrometer for 1000 minutes. Background and a NIST standard are also similarly counted and the tritium content calculated.

General QA/QC Procedures Critically reviewing TU/cpm/g of NIST standard versus existing data, critically reviewing background cpm versus existing data, and comparing data from splits of NIST and other samples with outside established laboratories. A criteria of exceeding 1 sigma limits from existing data triggers investigation of possible errors. Electrolytic enrichment cells are calibrated using working standards approximately every 6 months, or whenever duplicates prepared in different cells suggest a possible change in enrichment factor.

Maintenance The vacuum system is thoroughly evacuated between samples. All glassware and electrolytic cells are cleaned with deionized water and baked at about 130°C between samples.

Replication At a minimum, every tenth analysis is a replicate. Periodically a blind split is sent to another established tritium analysis laboratory for check purposes.

Reference Sample A NIST water standard (a dilution of NIST 4361B) is used for each sample set to verify accuracy and reproducibility. A glass-sealed high tritium sample is routinely checked to verify that the counter is operating satisfactorily. QA/QC plots are maintained for both standard and background counts using deviation of 1 sigma as a criteria for a more detailed evaluation of the data.

Calculation Calculations are performed utilizing a spreadsheet to calculate tritium concentration in TU on the date counted.

Documentation All procedural tests, sample preparations and verifications performed are recorded in bound maintenance log books. All final data including the date prepared, with analyst identification, are recorded on laboratory log sheets or in bound log books.

III. Dual Inlet Mass Spectrometric Analysis

A. Measurement of $^{13}C/^{12}C$ and $^{18}O/^{16}O$ in CO_2

Equipment Finnigan MAT Delta S Isotope Ratio Mass Spectrometer

Method/Procedure Because $^{13}C/^{12}C$ and $^{18}O/^{16}O$ analyses are performed simultaneously, the procedure described here generates both measurements. A mass spectrometric analysis involves comparisons of a sample to a reference standard; in this case the comparisons are measurements of mass 44, 45, and 46, giving the both the oxygen and carbon isotopic compositions. This is accomplished by a dual inlet system where the sample and the reference standard are measured alternately. At the beginning of each day, a reference standard is introduced into the standard side of the inlet system, and this gas is generally used for the entire session. There are two different reference standards in aluminum cylinders which are permanently mounted on the MS inlet system. The sample to be analyzed against the standard is introduced into the system via an evacuated inlet system and tube-cracker. With the inlet system fully evacuated, the sample (which is sealed into ¼" Pyrex tubing) is introduced by breaking the glass sample tube and allowing the sample to fill a variable volume bellows. Once the sample has been introduced into the MS, the actual analysis is computer controlled using equipment obtained from the manufacturer. Each analysis is given a specific reference name and/or number, utilizing the lab number as the primary reference. Final results are calculated by the manufacturer's software, and are stored on the hard drive of the computer, recorded in a bound lab notebook, and stored as the computer generated printout.

Maintenance The source region of the MS is periodically disassembled and cleaned. The filament is replaced as needed. Oil levels in mechanical vacuum pumps are checked frequently and maintained at the proper level. Turbomolecular pumps are lubricated according to the manufacturer's recommendations.

Calibration/Standardization The first analysis of each session is a zero enrichment, where the working standard is analyzed against itself to check machine stability. Isotope ratio determination involves multiple direct comparisons of the sample to a reference standard (generally at least 6 comparisons). Stable carbon and oxygen isotope compositions are always reported as the difference between the ratios of the two isotopes of interest in the sample and the ratio in a primary reference standard. That is,

$$\delta X_{(sample)} = [(R_{sample} - R_{standard})/ R_{standard}] \times 1000$$

Where X represents the isotope of interest, ^{13}C or ^{18}O, and R represents the ratio of $^{13}C/^{12}C$, or $^{18}O/^{16}O$. The δ value is expressed in terms of per mil (‰), or parts per thousand.

In practice, the difference between the sample and an internal reference standard is measured and then the value relative to the primary standard is calculated by the instrument manufacturer's software. Two internal reference standards are used at Isotech, both of which have been calibrated multiple times relative to several standards (graphite, oil, carbonates, waters, etc.) available from the International Atomic Energy Agency and the National Institute of Standards and Technology.

Replication Because of replicate sample preparations, at least 10% of all analyses are replicates.

Reference Samples Because 10% of all samples prepared for stable isotope analysis are check samples or reference samples which have been previously analyzed, these samples also serve as check samples for the mass spectrometer.

Calculation All calculations are performed by the software obtained from the manufacturer.

B. Measurement of $^2H/^1H$ (Deuterium/Hydrogen) in H_2

Equipment

Finnigan Delta Plus XL isotope ratio mass spectrometer
Aluminum heating block
Personal computer

Method/Procedure The H_3 factor, which is the portion of the mass 3 signal attributable to ^1H-^1H-^1H (instead of ^2H-^2H), is determined before each run early in the day and periodically throughout the day based on machine performance (if the values start drifting, a new H_3 factor is determined). The reference standard must be replenished at least once during an 8 hour period.

Water samples for deuterium/hydrogen analysis are sealed into ¼" Pyrex tubing as H_2O, along with a measured quantity of zinc. Each sample tube is labeled and reacted in a heating block at 500°C for 35 minutes to generate hydrogen gas. Once the sample has been reacted, it is introduced into the sample side of the MS inlet system and analyzed against the working standard. Each analysis is given a unique label, using the lab number as the primary reference. Once the sample has been introduced into the MS, the analysis is computer controlled. The raw result is calculated by the manufacturer's software and recorded into a bound lab notebook, as well as being stored on computer hard disk and computer generated printout of results.

Maintenance The source region of the MS is periodically disassembled and cleaned. The filament is replaced as needed. Oil levels in mechanical vacuum pumps are checked frequently and maintained at the proper level. Turbomolecular pumps are lubricated according to the manufacturer's recommendations.

Calibration/Standardization The first run each day is a zero-enrichment where the standard is run against itself to check machine stability. Stable hydrogen isotope compositions are always

reported as the difference between the ratios of the two isotopes of interest in the sample and the ratio in a primary reference standard. That is,

$$\delta D_{(sample)} = [({}^{2}H/{}^{1}H_{\,sample} - {}^{2}H/{}^{1}H_{\,standard})/\,{}^{2}H/{}^{1}H_{\,standard}] \times 1000$$

The δ value is expressed in terms of per mil (‰), or parts per thousand.

In practice, the difference between the sample and an internal reference standard is measured and then the value relative to the primary standard is calculated by the instrument manufacturer's software. Two internal reference standards are used at Isotech which have been calibrated relative to several water standards available from the International Atomic Energy Agency and the National Institute of Standards and Technology.

Replication Because of replicate preparation of samples, at least 10% of all analyses are replicates.

Reference Samples Because 10% of all samples prepared for stable isotope analysis are check samples or reference samples which have been previously analyzed, these samples also serve as check samples for the mass spectrometer.

Calculation All calculations are performed by the manufacturer's computer software. The raw data is then converted to final data using a spreadsheet on a personal computer. The spreadsheets are stored on computer hard disk and a copy is attached to the raw printouts for each batch of analyses.

IV. Gas Chromatographic Analysis of Gases

A. Analysis of hydrocarbons

Equipment

Shimadzu 2010 Gas Chromatograph. This (complete) GC system is equipped with two 2010 instruments; one containing a thermal conductivity detector (TCD) and a flame ionization detector (FID), and the other containing dual TCD's. Data processing is done on GC solutions software and a personal computer.

Shimadzu 2014 Gas Chromatograph. This (partial) GC system is equipped with both thermal conductivity (TCD) and flame ionization (FID) detectors. Data processing is done on GC solutions software and a personal computer.

Method/Procedure The sample loop on the GC is evacuated between each sample. Samples are injected into the evacuated sample loop and adjusted to atmospheric pressure. Sample identification is entered into the GC solutions software and the run is initiated.

The Shimadzu 2010 and 2014 utilizes several different packed columns and valve switching to separate the various components. Instrument configuration was designed by Shimadzu specifically to meet the requirements of Isotech. Helium is used as the carrier gas. All valve switching during the analysis is computer-controlled. The resulting component peak areas are then quantified by the software (given raw percent values) by comparing them to previously run standards. The lab technician checks the raw total for each analysis to ensure that all components have been detected. The raw total can vary from day to day depending on atmospheric pressure, with acceptable raw totals of 96% to 104%. The lab technician also checks all baselines for accuracy from the chromatograms shown on the computer screen. This raw computer record is maintained for each sample corresponding to its individual lab number. The raw percentage values for each sample are downloaded into the main sample database, and are normalized to 100% when the Analysis Report is generated.

Maintenance GC columns are periodically baked out according to manufacturer's instructions. Septa in the sampling valves are replaced as needed.

Calibration/Standardization Multiple reference gases are used for standardization of the Shimadzu gas chromatographs. All standards are analyzed on the same day during a new standardization to minimize the effects of barometric pressure variations. The minimum and maximum concentration used for calibration cover the range of the majority of natural gases submitted for analysis. At least four points are used for each component. For each new standardization, the peak area of each concentration for each compound is inserted into a

table within the GC Solutions software. This table is then accessed by the software, which uses point-to-point interpolation, to determine component concentrations for gas samples during analysis.

Reference Samples The reference sample used as the 1st run of each day and every tenth sample thereafter is representative of the majority of natural gas samples received for analysis. Data obtained for reference samples and expected results based on previous analyses can be provided as part of a QA/QC report.

Replication Every tenth analysis is a replicate. This replicate analysis is done approximately five samples following the check sample, thus a system check is performed at least every five analyses.

Calculation Each individual component for each sample is manually compared to the computer generated output to insure that the peak was labeled correctly and integrated correctly by the GC Solutions software.

B. Analysis of fixed gases

Equipment

Shimadzu 2010 Gas Chromatograph. This GC system is equipped with two 2010 instruments; one containing a thermal conductivity detector (TCD) and a flame ionization detector (FID), and the other containing dual TCD's but quantification of fixed gases is done using only the TCD's. Data processing is done on GC solutions software and a personal computer.

Shimadzu 2014 Gas Chromatograph. This GC system is equipped with both thermal conductivity (TCD) and flame ionization (FID) detectors but quantification of fixed gases is done using only the TCD. Data processing is done on GC solutions software and a personal computer.

Method/Procedure The procedure for analysis of fixed gases is identical to that for analysis of hydrocarbons, with one exception (for 2010 only). For separation of oxygen and argon, an external column on the Shimadzu 2010 is used. This column operates at -78 ℃; therefore a dewar of dry ice/isopropyl alcohol is placed on the column before each run. The lab technician checks all baselines to verify peak integration. The Shimadzu 2014 system is not equipped with the external column, thus argon and oxygen values are reported as one value. Also the 2014 system cannot detect helium and can only quantify hydrogen at limited concentrations.

Maintenance GC columns are periodically baked out according to manufacturer's instructions. The septum on the injection valve is periodically replaced.

Calibration/Standardization Multiple reference gases are used for standardization of the Shimadzu gas chromatographs. All standards are analyzed on the same day during a new standardization to minimize the effects of barometric pressure variations. The minimum and maximum concentration used for calibration cover the range of the majority of natural gases submitted for analysis. At least four points are used for each component. For each new standardization, the peak area of each concentration for each compound is inserted into a table within the GC Solutions software. This table is then accessed by the software, which uses point-to-point interpolation, to determine component concentrations for gas samples during analysis.

Check Sample Multiple reference sample are used to verify instrument performance and calibration. Data obtained for reference samples and expected results based on previous analyses can be provided as part of a QA/QC report.

Replication Every tenth analysis is a duplicate. This duplicate analysis is performed approximately five samples following the check sample, thus a system check is performed at least every five analyses.

Calculation Each individual component for each sample is manually compared to the computer generated output to insure that the peak was labeled correctly and integrated correctly by the GC Solutions software.

V. Radiocarbon Analysis of Prepared Samples

Radiocarbon analyses of purified CO2 samples prepared by Isotech are currently being subcontracted to either Beta Analytic Inc., Coral Gables, Florida or to Illinois State Geological Survey, Champaign, Illinois. Beta Analytic is the largest commercial radiocarbon dating laboratory in the world. The attached QA/QC plans have been provided by

BETA ANALYTIC INC
University Branch
4985 S.W. 74 Court
Miami, FL 33155

Illinois State Geological Survey
Natural Resources Building
615 East Peabody Drive
Champaign, IL 61820

APPENDIX C

Precision Analytical Quality Control Requirements for Microbiological Analysis

Quality Control Requirements for Microbiological Analysis							
Analysis	Method	Method Blank	Duplicate	Residual Chlorine	Sterility of Supplies	Air Quality	Positive/ Negative Controls
E. coli	SM 9223 B with Colilert System – EPA Approved Method	Every 10 samples or once per week	Every 10 samples or once per week	Each sample	Every new lot and new box	Monthly	Every new lot and new box
Iron Reducing Bacteria	Hach BART System	Every incubation batch	Every incubation batch	N/A	Confirmed with acceptable method blank	Monthly	N/A
Sulfate reducing Bacteria	Hach BART System	Every incubation batch	Every incubation batch	N/A	Confirmed with acceptable method blank	Monthly	N/A
Total Coliform	SM 9223 B with Colilert System	Every 10 samples or once per week	Every 10 samples or once per week	Each sample	Every new lot and new box	Monthly	Every new lot and new box

Twice each year a sample from an independent proficiency test provider is analyzed for Total coliforms and E. coli. The results must be within the acceptance limits recorded on the Certificate of Analysis. If not, no further samples will be analyzed until the source of the error is determined.

Additional blanks and matrix spikes may be analyzed to fit customer needs. These would be billed to the customer as additional samples. Additional quality control needs may be discussed with the customer.

APPENDIX D

Field Instrument Operation, Maintenance, and Calibration

RAVENSGATE CORPORATION

SONIC WATER LEVEL METERS

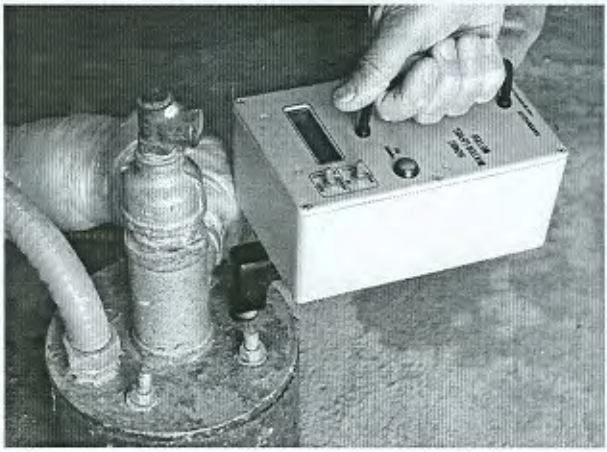

MODEL 200 USER GUIDE

sonic water level meter manual
U47311X

Contents

Introduction 2
Operating Instructions 2
Setting the Temperature 4
Battery Replacement 4
Measurement Problems..... 5
Optional Duct Extender 6
Specifications 7
Warranty 8
Contact Information 8

© 2002 Ravensgate Corporation
All rights reserved.

December 23, 2003

INTRODUCTION

Thank you for purchasing a RAVENSGATE SONIC WATER LEVEL METER, Model 200. You will find that it provides fast, accurate measurements of static water level and draw-down. Furthermore, its small size and light weight make it very convenient to carry to work sites and other locations where measurements are necessary.

Unlike most other water level measurement devices, our Sonic method operates by injecting sound waves into the well casing. The wave reflected from the water surface is then analyzed to determine the level and the result displayed on the front panel. Thus, down-hole probes or instrumentation are not necessary. All that is required is an access port in the well cap 5/8 inches or greater in diameter. Simply insert the measuring duct through the cap, push the power-on button and the measurement is displayed in a few seconds. If the well is uncapped, we supply the meter with an easily fitted cap for diameters up to 6 inches. Larger diameter caps can be fabricated as needed from plastic or sheet metal.

Model 200 shown with the duct properly inserted into the well head.

OPERATING INSTRUCTIONS

Operating the meter requires setting the **DEPTH SWITCH** to either the **NORMAL** or **DEEP** setting. The **NORMAL** setting should be used when the static water level is between 10 feet and 500 feet. If the static water level is outside this range, inaccurate readings may occur. Likewise, in the **DEEP** setting, the static water level

must be deeper than 200 feet to avoid inaccurate readings. However, when applicable, using this setting can reduce the possibility of false readings from obstructions in the upper end of the well casing or from the lower end of the casing in rock wells.

Momentarily pushing the **RED POWER ON** button activates the meter. In the **NORMAL** depth setting it will remain active for five seconds at one "ping" per second. In the **DEEP** setting it will stay active for 15 seconds at one "ping" every 2.75 seconds. Pressing and holding the button continuously will keep the meter active for longer measurement times.

A typical meter reading on the Model 200

At activation, the display comes alive and the temperature setting will appear. If necessary, raise or lower the setting by toggling the temperature switch either forward or backward to the desired value. The temperature setting will be retained when the power is off. For more information see the next section, ***SETTING THE TEMPERATURE***.

Making a measurement is now very simple. Just insert the measuring duct through the access port in the well cap. Make sure that the measuring duct extends all the way through the well cap and seal. Then push the **RED POWER ON** button. The well water level will usually be displayed after the first "ping". It may turn out that the initial **DEPTH** setting was inappropriate. If so, it may be changed at any time, whether the meter is activated or not. If the setting is changed while the unit is running, there may be a delay of a few "pings" before the unit changes modes.

If the well is uncapped and the depth to water is over 100 feet, the cap cover furnished with the meter should be used. Just slide the cover onto the duct and place the meter over the casing. It is not necessary to have a tight seal. However, large gaps due to off-center or tilted placement can reduce the maximum measurable level.

The cover furnished with the unit is for casing diameters up to six inches. For larger diameters, a cover may be easily made from any convenient material such as plastic or sheet metal.

Model 200 with 6 in. cap installed

SETTING THE TEMPERATURE

Accurate measurements are best assured when the temperature setting equals the average air temperature in the well casing. The effect of an incorrect setting is approximately one-tenth percent (0.1%) of the depth reading per degree F of error. As an example, if the error is 10 degrees, the measurement will be in error by 1%.

The map and tables furnished with the meter facilitate setting the temperature. For each meter, a map is provided for the state (USA only) where it is to be used. The map is divided into geographical regions. To find the setting temperature, simply locate your region in the left hand column of the **map table.** Then, follow across this row to the month column to find the temperature setting.

It should be recognized that the **map table** may not be useful in regions of geothermal activity or anomalous subsurface conditions. In this case, for best accuracy, it is necessary to know the well water temperature and the monthly average surface temperature. With this information, the **look-up table** on the back of the map gives the appropriate temperature setting. To use it, first locate the well water temperature in the left hand column. Then, follow across this row to the surface temperature column to find the setting temperature. As an example, if the water temperature is 58 degrees F and the average surface temperature is 85 degrees F, the setting will be 62 degrees F.

BATTERY REPLACEMENT

The meter comes provided with eight, AA dry cells. Battery replacement is indicated when the ***LO BAT*** signal on the display consistently stays on during operation. The batteries are located in a slide-out holder located inside of the meter case at the rear. To access the holder remove the six screws on the edge of the of the meter box face. The face should be carefully laid to one side, taking care not to damage or pull on the wires leading to the face. The battery pack connector should be unsnapped next. Then pull the battery pack out from its bracket.

Remove the 6 outside screws to remove the cover

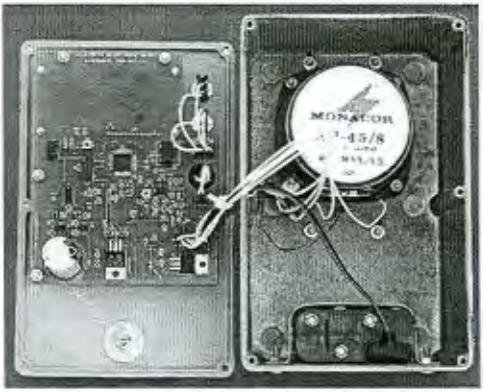

Case opened for battery replacement

Battery pack disconnected and removed

The new batteries are then inserted according to the polarity indications on the holder. For best life the new batteries should be alkaline type. These will provide about 20 hours of continuous running and up to the shelf life of the batteries under more normal intermittent operation. Other types will work, but will have a shorter lifetime. Next, slide the battery pack into the bracket, snap the connector back on the holder, replace the box face being careful not to pinch any wires. Secure with the six cover screws.

MEASUREMENT PROBLEMS

In older wells, the casing may be highly corroded or rough, causing high signal attenuation and unreliable water level readings. In this situation, the higher sensitivity **DEEP** setting will minimize the problem. However, to use this setting, the water level must be greater than 200 feet.

A measurement error might occur if the casing has a discontinuity causing an erroneous reflection. This situation may occur in rock wells if there are voids or fissures in the rock wall. It may also occur in continuously cased wells if the casing diameter abruptly changes somewhere down the well. Likewise, obstructions in the well casing such as torque arresters, wire shields or anything exceeding ½ the area of the casing may also cause erroneous level readings.

In some cases the signal coupling to the well casing may be poor. To avoid this, be sure that the measuring duct goes all the way through the well cap or seal. If the cover plates are used, be sure that there is no large gap between the plate and the well casing.

OPTIONAL DUCT EXTENDER

The DUCT EXTENDER is available as an option. The extender gives access to well casings located six inches or less below a larger diameter casing. The extender slips over the meter duct and mates directly with 2 inch PVC. For larger diameters, a six inch cover is provided that attaches to the end of the extender. Since the extender is six inches long, this amount should be subtracted from the displayed water level.

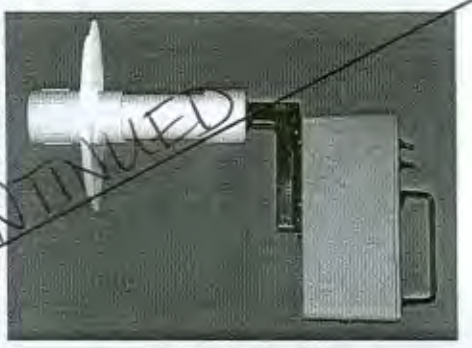

Duct Extender installed on the Model 200

DISCONTINUED

SPECIFICATIONS

Dimensions:

Length not including duct: 7 inches
Height not including duct: 4 inches
Width: 5 inches

Measuring duct:

Diameter. 5/8 inches
Length. 2 inches

Weight: 3.5 lbs.

Power: 8, AA alkaline batteries

Measurement range:

Normal setting: 10 to 500 feet
Deep setting: 200 to 1200 feet (Under certain conditions this may be less. See *Measurement Problems*.)

Readout accuracy: +/- 0.1 foot

Measurement accuracy *:

(Applies for casing diameters from 2 to 10 inches. Outside this range accuracy may vary.)

+/- 0.2 ft. for water level less than 100 ft,
+/- 0.2% of depth reading for water levels 100 ft. or greater.

Operating temperature range of the meter: 30 to 140 degrees F.
The outside or ambient air temperature does not affect the meter operation provided the meter and its components remain within the operating temperature range.

*Under certain conditions, measurement accuracy may exceed this limit. See the previous section, *MEASUREMENT PROBLEMS*.

OPTIONS

Carrying Case
~~Duct Extender~~

WARRANTY

We, The Ravensgate Corporation warrant this product against defects or malfunctions in materials or workmanship for one year from the date of purchase by you, the original purchaser. WE MAKE NO OTHER EXPRESS WARRANTY OR REPRESENTATION OF ANY KIND WHATSOEVER CONCERNING THIS PRODUCT. If any such defect or malfunction occurs within one year of the date of your original purchase, the unit will be repaired or replaced by us without charge.

This warranty does not apply when: (1) the unit has been repaired or modified by anyone other than us. (2) any defect or problem has resulted from accident, misuse, negligence or carelessness.

Return authorization under the warranty or for repair or replacement must be obtained. Contact the Ravensgate Corporation for shipping and packaging instructions.

Ravensgate Corporation is not responsible for loss or damage due to misuse or inappropriate application.

DISCLAIMER:

Ravensgate Corporation will not be responsible or liable for consequential damages caused by instrument failure for any reason whatsoever. Also, Ravensgate Corporation can not be responsible for specifications given by dealers, resellers or others that differ from those given herein.

CONTACT INFORMATION:

THE RAVENSGATE CORPORATION:

telephone: 760-377-0079

postal address: 220 N. Alford St. Ridgecrest, CA 93555

internet: www.ravenscorp.com

e-mail: info@ravenscorp.com

Table of Temperature Control Settings
Ts, degrees F

Well Water Temperature, Tw, degrees F	Average Daily Surface Temperature, Tg, degrees F																			
	0	5	10	15	20	25	30	35	40	45	50	55	60	65	70	75	80	85	90	95
36	31	31	32	33	34	34	35	36	37	37	38	39	40	40	41	42	43	43	44	45
38	32	33	34	35	35	36	37	38	38	39	40	41	41	42	43	44	44	45	46	47
40	34	35	36	36	37	38	39	39	40	41	42	42	43	44	45	45	46	47	48	48
42	36	36	37	38	39	39	40	41	42	42	43	44	45	45	46	47	48	48	49	50
44	37	38	39	40	40	41	42	43	43	44	45	46	46	47	48	49	49	50	51	52
46	39	40	41	41	42	43	44	44	45	46	47	47	48	49	50	50	51	52	53	53
48	41	42	42	43	44	45	45	46	47	48	48	49	50	51	51	52	53	54	54	55
50	43	43	44	45	46	46	47	48	49	49	50	51	52	52	53	54	55	55	56	57
52	44	45	46	46	47	48	49	49	50	51	52	52	53	54	55	55	56	57	58	58
54	46	47	47	48	49	50	50	51	52	53	53	54	55	56	56	57	58	59	59	60
56	48	48	49	50	51	51	52	53	54	54	55	56	57	57	58	59	60	60	61	62
58	49	50	51	52	52	53	54	55	55	56	57	58	58	59	60	61	61	62	63	64
60	51	52	53	53	54	55	56	56	57	58	59	59	60	61	62	62	63	64	65	65
62	53	53	54	55	56	56	57	58	59	59	60	61	62	62	63	64	65	65	66	67
64	54	55	56	57	57	58	59	60	60	61	62	63	63	64	65	66	66	67	68	69
66	56	57	58	58	59	60	61	61	62	63	64	64	65	66	67	67	68	69	70	70
68	58	59	59	60	61	62	62	63	64	65	65	66	67	68	68	69	70	71	71	72
70	60	60	61	62	63	63	64	65	66	66	67	68	69	69	70	71	72	72	73	74
72	61	62	63	63	64	65	66	66	67	68	69	69	70	71	72	72	73	74	75	75
74	63	64	64	65	66	67	67	68	69	70	70	71	72	73	73	74	75	76	76	77
76	65	65	66	67	68	68	69	70	71	71	72	73	74	74	75	76	77	77	78	79
78	66	67	68	69	69	70	71	72	72	73	74	75	75	76	77	78	78	79	80	81
80	68	69	70	70	71	72	73	73	74	75	76	76	77	78	79	79	80	81	82	82
82	70	70	71	72	73	73	74	75	76	76	77	78	79	79	80	81	82	82	83	84
84	71	72	73	74	74	75	76	77	77	78	79	80	80	81	82	83	83	84	85	86
86	73	74	75	75	76	77	78	78	79	80	81	81	82	83	84	84	85	86	87	87
88	75	76	76	77	78	79	79	80	81	82	82	83	84	85	85	86	87	88	88	89
90	77	77	78	79	80	80	81	82	83	83	84	85	86	86	87	88	89	89	90	91

Ravensgate Corporation, 220 N. Alford, Ridgecrest, CA, 93555, Ph: (760) 377-0079

RAVENSGATE
CORPORATION

Postal address: 220 N. Alford St., Ridgecrest, CA 93555
Information and support:
Phone: 760-377-0079
Internet: www.ravenscorp.com

YSI *incorporated*

6-Series
Multiparameter Water Quality Sondes

User Manual

6-Series:
6600 V2
6600EDS V2
6920 V2
6820 V2
600 OMS V2
600XL
600XLM
600LS
600R
600QS

6600 V2-4 Sonde

SAFETY NOTES

TECHNICAL SUPPORT AND WARRANTY INFORMATION

Contact information for technical support and warranty information on YSI's Environmental Monitoring Systems products can be found in **Section 9, Warranty and Service Information**.

COMPLIANCE

When using the YSI 6-Series sondes in a European Community (CE) country, please be aware that electromagnetic compatibility (EMC) performance issues may occur under certain conditions, such as when the sonde is exposed to certain radio frequency fields.

If you are concerned with these issues, consult the Declaration of Conformity that was enclosed with your instrument. Specific conditions where temporary sensor problems may occur are listed in this document.

The Declaration of Conformity for your instrument can be found in Appendix H, EMC Performance. A similar document for YSI Model 650 is located at the end of Section 3, 650 MDS.

SPECIFICATIONS

For general specifications for all YSI Environmental Monitoring Systems products included in this manual, please see **Appendix O, Specifications**.

GENERAL SAFETY CONSIDERATIONS

For Health and Safety issues concerning the use of the calibration solutions with the sondes, please see **Appendix A, Health and Safety**.

NOTICE

Information contained in this manual is subject to change without notice. Effort has been made to make the information contained in this manual complete, accurate, and current. YSI shall not be held responsible for errors or omissions in this operations manual.

WARNING:
When caring for your sonde, remember that the sonde is sealed at the factory, and there is never a need to gain access to the interior circuitry of the sonde. In fact, if you attempt to disassemble the sonde, you would void the manufacturer's warranty.

TABLE OF CONTENTS

SECTION 1 INTRODUCTION

1.1 ABOUT YSI	1-1
1.2 HOW TO USE THIS MANUAL	1-1
1.3 UNPACKING AND INSPECTION	1.2

SECTION 2 SONDES

2.1 GETTING STARTED	2-1
2.2 CONNECTING YOUR SONDE	2-2
2.3 PREPARING THE SONDE FOR USE	2-5
2.4 ECOWATCH FOR WINDOWS – GETTING STARTED	2-24
2.5 SONDE SOFTWARE SETUP	2-25
2.6 GETTING READY TO CALIBRATE	2-34
2.7 TAKING READINGS	2-49
2.8 USING ECOWATCH TO UPLOAD AND ANALYZE DATA	2-54
2.9 SONDE MENU	2-68
2.10 CARE, MAINTENANCE, AND STORAGE	2-111

SECTION 3 650 MDS DATA LOGGER

3.1 INTRODUCTION	3-1
3.2 GETTING STARTED	3-1
3.3 SETTING UP THE 650	3-18
3.4 SONDE MENU INTERFACE	3-21
3.5 LOGGING DATA WITH THE 650	3-27
3.6 MANAGING 650 FILES	3-46
3.7 UPLOADING DATA FROM SONDES	3-51
3.8 USING GPS WITH 650	3-51
3.9 USING THE 650 BAROMETER	3-53
3.10 UPGRADING 650 SOFTWARE	3-55
3.11 TROUBLESHOOTING	3-56
3.12 FERRITE BEAD INSTALLATION	3-57
3.13 SAFETY CONSIDERATIONS	3-58
3.14 650 MDS SPECIFICATIONS	3-61

SECTION 4 ECOWATCH FOR WINDOWS

4.1 INTRODUCTION	4-1
4.2 DATA ACQUISITION AND ANALYSIS	4-7
4.3 ECOWATCH MENU	4-12

SECTION 5 PRINCIPLES OF OPERATION

5.1 CONDUCTIVITY	5-1
5.2 SALINITY	5-2
5.3 TOTAL DISSOLVED SOLIDS (TDS)	5-2
5.4 OXIDATION REDUCTION POTENTIAL (ORP)	5-3
5.5 pH	5-4
5.6 DEPTH AND LEVEL	5-6
5.7 TEMPERATURE	5-7
5.8 DISSOLVED OXYGEN RAPID PULSE	5-7
5.9 DISSOLVED OXYGEN ROX OPTICAL	5-10
5.10 NITRATE	5-12
5.11 AMMONIUM AND AMMONIA	5-14
5.12 CHLORIDE	5-16
5.13 TURBIDITY	5-17

5.14 CHLOROPHYLL **5-21**
5.15 RHODAMINE **5-28**
5.16 PHYCOCYANIN-CONTAINING BLUE-GREEN ALGAE **5-31**
5.17 PHYCOERYTHRIN-CONTAINING BLUE-GREEN ALGAE **5-37**
5.18 FLOW **5-42**

SECTION 6 TROUBLESHOOTING
6.1 CALIBRATION ERRORS **6-1**
6.2 SONDE COMMUNICATION PROBLEMS **6-2**
6.3 SENSOR PERFORMANCE PROBLEMS **6-3**

SECTION 7 COMMUNICATION
7.1 OVERVIEW **7-1**
7.2 HARDWARE INTERFACE **7-1**
7.3 RS-232 INTERFACE **7-2**
7.4 SDI-12 INTERFACE **7.2**

SECTION 8 UPGRADING SONDE FIRMWARE **8.1**

SECTION 9 WARRANTY AND SERVICE INFORMATION
9.1 LIMITATIONS OF WARRANTY **9-1**
9.2 AUTHORIZED SERVICE CENTERS **9-2**
9.3 CLEANING INSTRUCTIONS **9-2**
9.4 PACKING INSTRUCTIONS **9-2**
9.5 PRODUCT RETURN FORM **9-4**

APPENDIX A HEALTH AND SAFETY **A-1**

APPENDIX B REQUIRED NOTICE **B-1**

APPENDIX C ACCESSORIES AND CALIBRATION STANDARDS **C-1**

APPENDIX D SOLUBILITY AND PRESSURE/ALTITUDE TABLES **D-1**

APPENDIX E TURBIDITY MEASUREMENTS **E-1**

APPENDIX F FLOW **F-1**

APPENDIX G USING VENTED LEVEL **G-1**

APPENDIX H EMS PERFORMANCE **H-1**

APPENDIX I CHLOROPHYLL MEASUREMENTS **I-1**

APPENDIX J PERCENT AIR SATURATION **J-1**

APPENDIX K PAR SENSOR **K-1**

APPENDIX L PROTECTIVE ZINC ANODE **L-1**

APPENDIX M ROX OPTICAL DO SENSOR **M-1**

APPENDIX N NMEA APPLICATIONS **N-1**

APPENDIX O SPECIFICATIONS **O-1**

SECTION 1 INTRODUCTION

1.1 ABOUT YSI INCORPORATED

From a three-man partnership in the basement of the Antioch College science building in 1948, YSI has grown into a commercial enterprise designing and manufacturing precision measurement sensors and control instruments for users around the world. Although our range of products is broad, we focus on three major markets: water testing and monitoring, health care, and bioprocessing.

In the 1950s, Hardy Trolander and David Case made the first practical electronic thermometer using a thermistor. This equipment was developed to supply Dr. Leland Clark with a highly sensitive and precise temperature sensor for the original heart-lung machine. The collaboration with Dr. Clark has been critical to the success of the company. In the 1960s, YSI refined a Clark invention, the membrane covered polarographic electrode, and commercialized oxygen sensors and meters which revolutionized the way dissolved oxygen was measured in wastewater treatment plants and environmental water. Today, geologists, biologists, environmental enforcement personnel, officials of water utilities and fish farmers recognize us as the leader in dissolved oxygen measurement.

In the 1970s, YSI again worked with Clark to commercialize one of his many inventions, the enzyme membrane. This development resulted in the first practical use of a biosensor, in the form of a membrane based on immobilized glucose oxidase, to measure blood sugar accurately and rapidly. In the next few years, this technology was extended to other enzymes, including lactate oxidase, for applications in biotechnology, health care, and sports medicine.

In the early 1990s, YSI launched a line of multi-parameter water monitoring systems to address the emerging need to measure non-point source pollution. Today we have thousands of instruments in the field that operate with the push of a button, store data in memory, and communicate with computers. These instruments (described in this manual) are ideal for profiling and monitoring water conditions in industrial and wastewater effluents, lakes, rivers, wetlands, estuaries, coastal waters, and monitoring wells. If the instrument has ‘on board’ battery power, it can be left unattended for weeks at a time with measurement parameters sampled at the user’s setup interval and data securely saved in the unit's internal memory. The fast responses of YSI’s sensors make the systems ideal for vertical profiling, and the small size of some our sondes allows them to fit down 2-inch diameter monitoring wells. All of YSI’s multi-parameter systems feature either the YSI-patented Rapid Pulse Dissolved Oxygen Sensor, which exhibits low-stirring dependence and provides accurate results without an expensive, bulky, and power-intensive stirrer or an ROX optical dissolved oxygen sensor which exhibits no flow dependence and is extremely stable in long-term deployments.

YSI has established a worldwide network of selling partners in over 50 countries that includes laboratory supply dealers, manufacturers' representatives, and YSI’s sales force. A subsidiary, YSI UK, distributes products in the United Kingdom, a sales office in Hong Kong supports YSI’s distribution partners in Asia Pacific, and YSI Japan supports distribution partners in Japan.

Through an employee stock ownership plan (ESOP), every employee is one of the owners. In 1994, the ESOP Association named YSI the ESOP Company of the Year. YSI is proud of its products and are committed to meeting or exceeding customers' expectations.

1.2 HOW TO USE THIS MANUAL

The manual is organized to let you quickly understand and operate the YSI 6-Series environmental monitoring systems. However, it cannot be stressed too strongly that informed and safe operation is more than just knowing which buttons to push. An understanding of the principles of operation, calibration

techniques, and system setup is necessary to obtain accurate and meaningful results. Thorough reading and understanding of this manual is essential to proper operation.

Because of the many features, configurations and applications of these versatile products, some sections of this manual may not apply to the specific system you have purchased.

If you have any questions about this product or its application, please contact YSI's Technical Support Group or authorized dealer for assistance. See **Section 9, Warranty and Service Information** for contact information.

1.3 UNPACKING AND INSPECTION

Inspect the outside of the shipping box for damage. If any damage is detected, contact your shipping carrier immediately. Remove the equipment from the shipping box. Some parts or supplies are loose in the shipping box so check the packing material carefully. Check off all of the items on the packing list and inspect all of the assemblies and components for damage.

If any parts are damaged or missing, contact your YSI representative immediately. If you purchased the equipment directly from YSI, or if you do not know from which YSI representative your equipment was purchased, refer to **Section 8, Warranty and Service Information** for contact information.

SECTION 2 SONDES

2.1 GETTING STARTED

The 6-Series Environmental Monitoring Systems from YSI are multi-parameter, water quality measurement, and data collection systems. They are intended for use in research, assessment, and regulatory compliance applications. Section 2 concentrates on sondes and how to operate them during different applications. A sonde is a torpedo-shaped water quality monitoring device that is placed in the water to gather water quality data. Sondes may have multiple probes. Each probe may have one or more sensors that read water quality data.

The following list contains parameters that your sonde may measure. See **Appendix O, Specifications** for the specific parameters of each sonde.

- Rapid Pulse Polarographic Dissolved Oxygen
- ROX Optical Dissolved Oxygen
- Conductivity
- Specific Conductance
- Salinity
- Total Dissolved Solids
- Resistivity
- Temperature
- pH
- ORP
- Depth
- Level
- Flow
- Turbidity
- Chlorophyll
- Rhodamine WT
- Phycocyanin-Containing Blue-green Algae
- Phycoerythrin-Containing Blue-green Algae
- Nitrate-N
- Ammonia-N
- Ammonium-N
- Chloride

This section is designed to quickly familiarize you with the hardware and software components of the sondes and their accessories. You will then proceed to probe installations, cable connections, software installation and finally basic communication with your Sonde. Diagrams, menu flow charts and basic written instructions will guide you through basic hardware and software setup.

2.2 CONNECTING YOUR SONDE

There are a number of ways in which you may connect the sondes to various computers, data collection devices and VT-100 terminal emulators. To utilize the configuration that will work best for your application, make sure that you have all of the components that are necessary. The following list and diagrams (Figures 1-4) are a few possible configurations.

- Sonde to Lab Computer (recommended for initial setup)
- Sonde to Data Collection Platform
- Sonde to Portable Computer
- Sonde to YSI 650 MDS Display/Logger

Figure 1

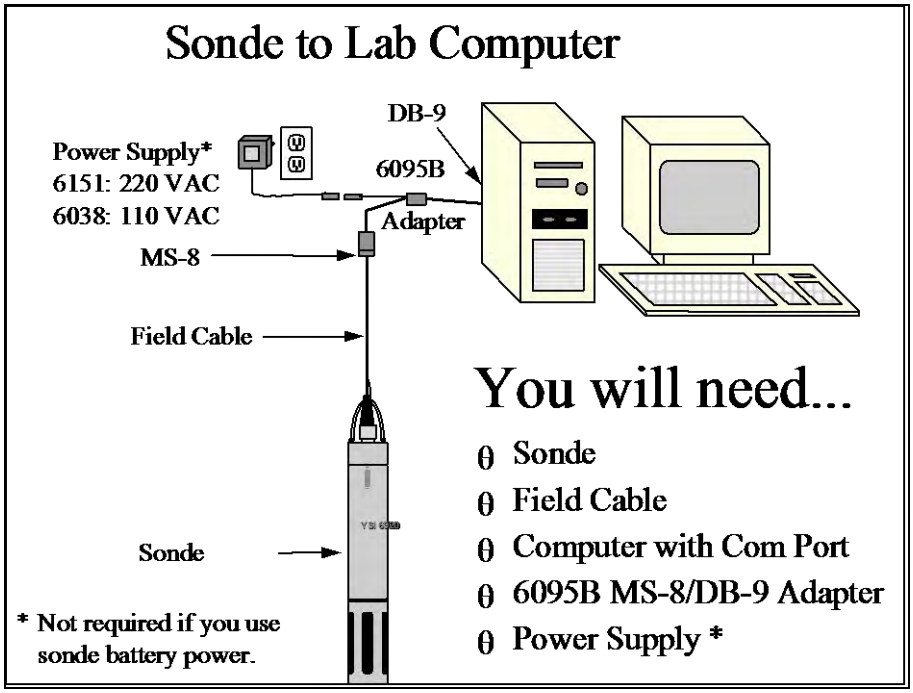

Figure 2

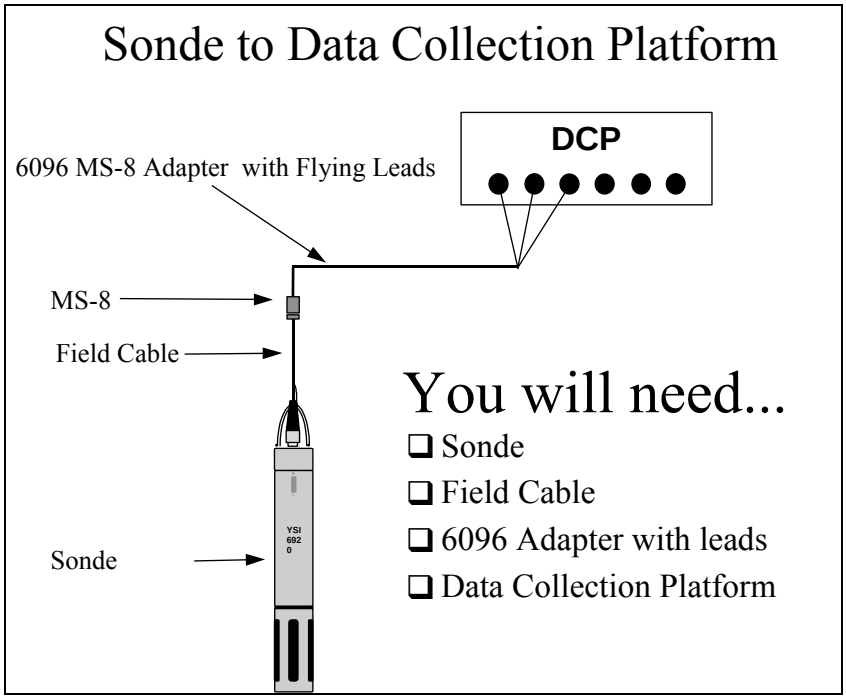

Figure 3

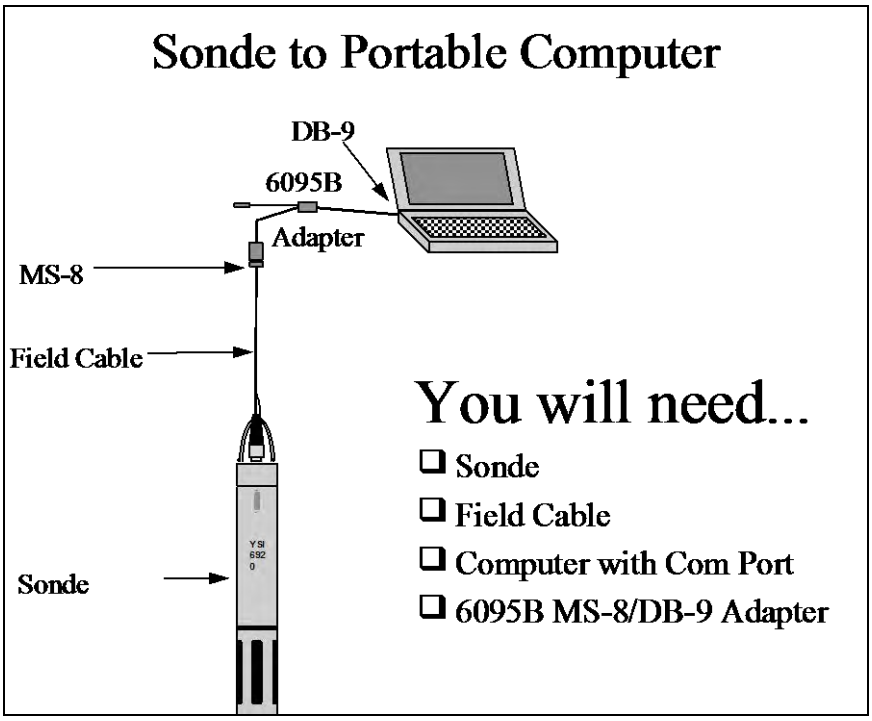

Figure 4

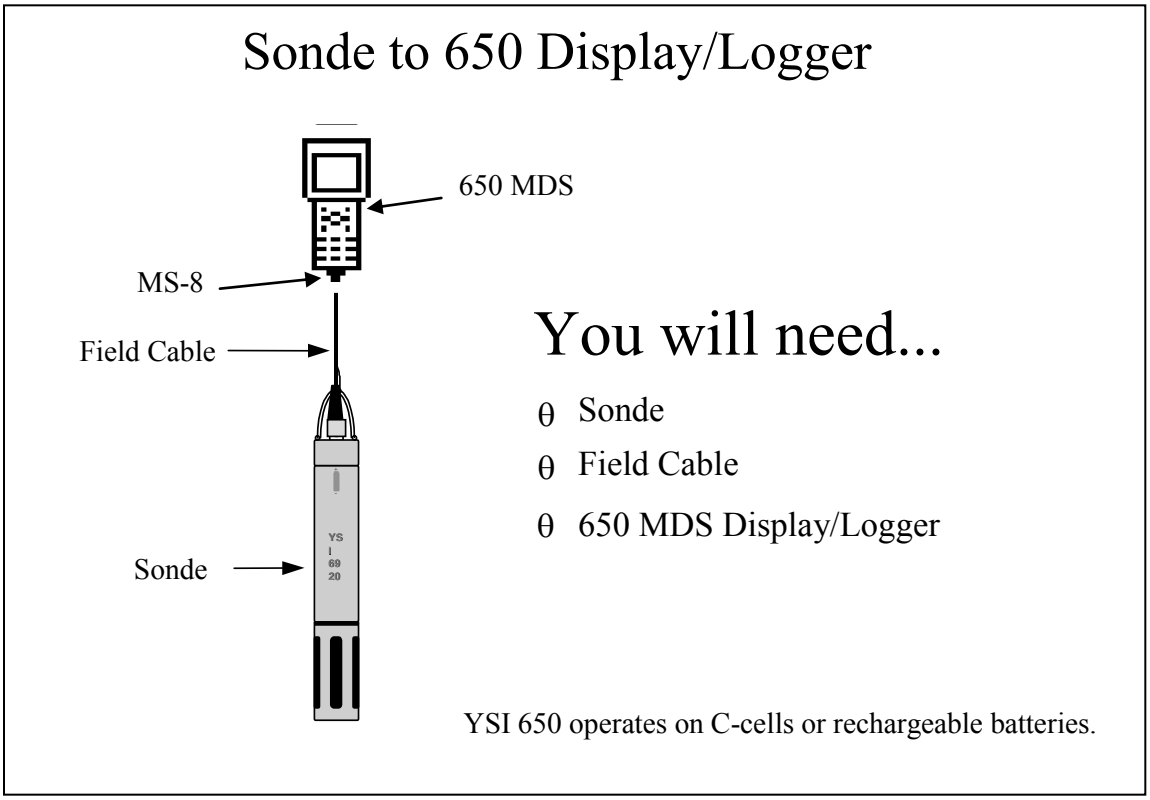
Sonde to 650 Display/Logger
650 MDS
MS-8
Field Cable
Sonde
You will need...
θ Sonde
θ Field Cable
θ 650 MDS Display/Logger
YSI 650 operates on C-cells or rechargeable batteries.

2.3 PREPARING THE SONDE FOR USE

To prepare the sonde for calibration and operation, you need to install probes (sensors) into the connectors on the sonde bulkhead. In addition to probe installation, you need to install a new membrane on the YSI 6562 DO Probe if you are using this item. It is recommended that you install the DO membrane before installing the probe onto the bulkhead. For membrane changes in the future, you may be able to perform this operation without removing the DO probe. This will largely depend on whether the other installed probes interfere with your ability to install a membrane. The next step is providing power for the sondes, through batteries or line power, and then connecting a field cable. The four steps necessary for getting your sonde ready for use are listed below.

Step 1 Installing the Dissolved Oxygen Membrane – Section 2.3.1
Step 2 Installing the Probes – Section 2.3.2
Step 3 Supplying Power – Section 2.3.3
Step 4 Connecting a Field Cable – Section 2.3.4

2.3.1 STEP 1 - INSTALLING THE DISSOLVED OXYGEN MEMBRANE

Note: If you are using a ROX Optical DO sensor for your applications, please skip to Section 2.3.2 at this time.

The 6562 Rapid Pulse Polarographic DO probe is shipped with a protective dry membrane on the sensor tip held in place by an O-ring. Remove the O-ring and membrane. Handle the probe with care. It is very important not to scratch or contaminate the sensor tip. See **Section 2.10.2, Probe Care and Maintenance**, for information on how often the membrane should be replaced.

Unpack the YSI 6562 DO Probe Kit and follow the instructions below.

Open the membrane kit and prepare the electrolyte solution. Dissolve the KCl in the dropper bottle by filling it to the neck with deionized or distilled water and shaking until the solids are fully dissolved. After the KCl is dissolved, wait a few minutes until the solution is free of bubbles.

Figure 5

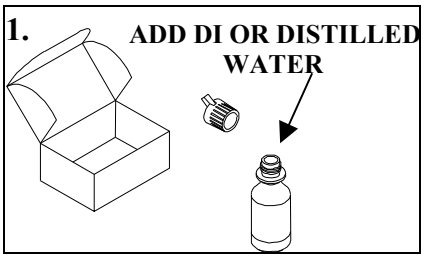

Figure 6

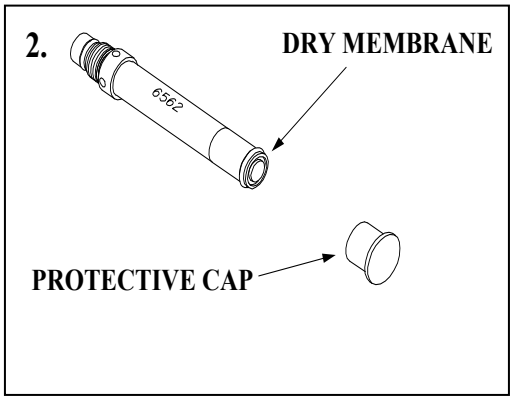

The DO membrane can be installed with the DO probe either free or installed in the sonde. Both methods are described in detail below. **CAUTION: If you install the membrane with the probe not installed in the sonde, be sure that the protective cap is installed on the probe end away from the sensor face to ensure that the connector is not contaminated with electrolyte.**

DO MEMBRANE INSTALLATION WITH THE PROBE NOT INSTALLED IN THE SONDE

Remove the protective cap and the dry membrane from the YSI 6562 Dissolved Oxygen probe.

Make sure that the protective cap is installed on the connector end of the probe. Do not allow the electrolyte solution to wet the probe‟s connector and O-ring seal areas. This solution is extremely corrosive to the connector and is difficult to remove.

Before using any electrolyte, wrap a clean, dry paper towel around the capped probe to catch any spilled electrolyte. Hold the probe in a vertical position and apply a few drops of KCl solution to the tip. The fluid should completely fill the small moat around the electrodes and form a meniscus on the tip of the sensor. Be sure no air bubbles are stuck to the face of the sensor. If necessary, shake off the electrolyte and start over.

Figure 7

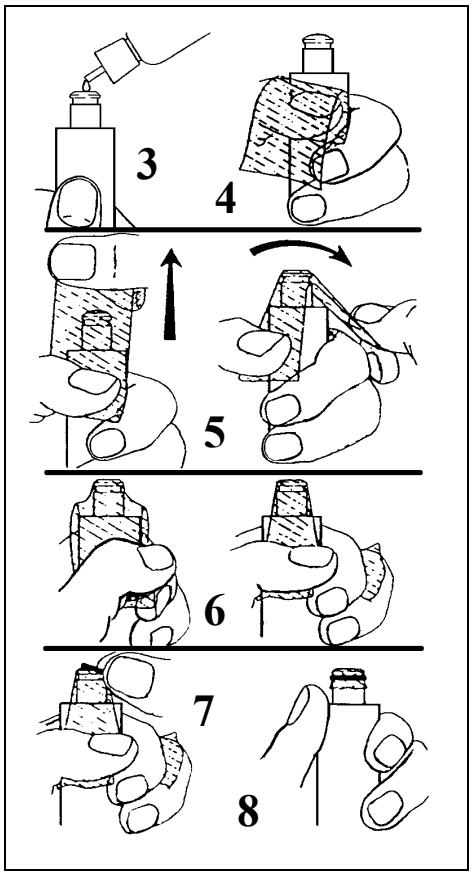

Secure a membrane between your left thumb and the probe body. Always handle the membrane with care, touching it only at the ends.

With the thumb and forefinger of your right hand, grasp the free end of the membrane. With one continuous motion, gently stretch it up, over, and down the other side of the sensor. The membrane should conform to the face of the sensor.

Secure the end of the membrane under the forefinger of your left hand.

Roll the O-ring over the end of the probe, being careful not to touch the membrane surface with your fingers. There should be no wrinkles or trapped air bubbles. Small wrinkles may be removed by lightly tugging on the edges of the membrane. If bubbles are present, remove the membrane and repeat steps 3-8.

Trim off any excess membrane with a sharp knife or scissors. Rinse off any excess KCl solution, but be careful not to get any water in the connector.

If you are concerned that electrolyte may have dripped onto the O-ring seal area, probe connector, or bulkhead connectors, rub the area clean with paper towels wetted with Deionized water and then dry the affected area with a final dry towel, compressed air blasts, or rinse with fresh alcohol.

NOTE: You may find it more convenient to mount the probe vertically in a vise with rubber jaws while applying the electrolyte and membrane to the sensor tip.

DO MEMBRANE INSTALLATION WITH THE PROBE INSTALLED IN THE SONDE

Secure the sonde in a vertical position using a vise or a clamp and ring stand such that the sensors are upright. Remove the probe guard from the sonde.

Remove the old DO membrane and clean the probe tip with water and lens cleaning tissue. Make sure to remove any debris or deposits from the O-ring groove.

Using the dropper bottle of electrolyte supplied, place electrolyte on the DO probe tip until a high meniscus is formed as shown in Figure 8 below.

Figure 8

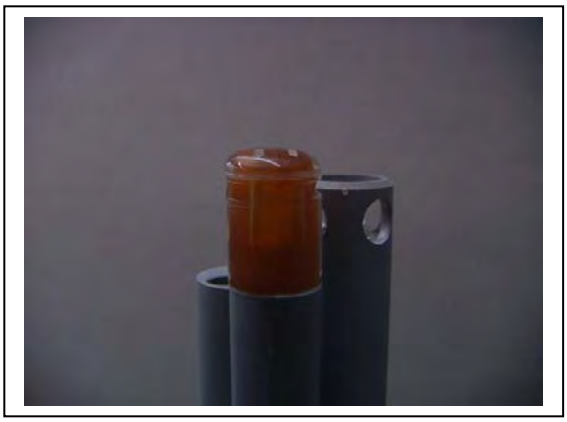

Figure 9

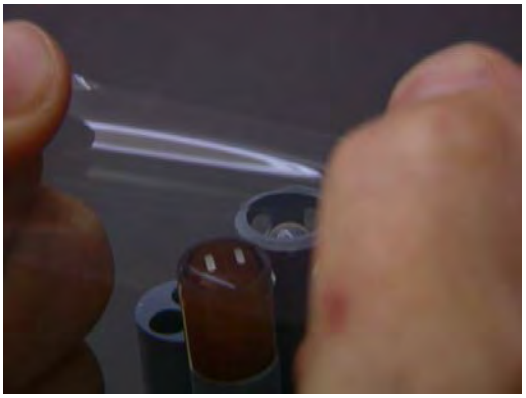

Hold the membrane so that all four corners are supported, but do not stretch the membrane laterally.

Position the membrane over the probe, keeping it parallel to the probe face as shown in Figure 9 above.

Using one continuous downward motion, stretch the membrane over the probe face as shown. See Figure 10 below. Do not hesitate to stretch the membrane.

Figure 10

Figure 11

Install a new O-ring by placing one side of the O-ring in the groove and rolling into place across the membrane and into the groove on the opposite side of the probe face. Avoid touching the probe face with

your fingers. Once the O-ring is in position, squeeze it every 90 degrees to equalize the tension. See Figure 11 above. DO **NOT** USE GREASE OR LUBICANT OF ANY KIND ON THE O-RING.

Using a hobby knife or a scalpel, trim the excess Teflon from the membrane, making your cut about 1/8 inch below the O-ring as shown in Figure 12 below. A razor blade can be used for the cut if no knife or scalpel is available.

Figure 12

Figure 13

If the installation has been done properly, the finished product should have no bubbles, wrinkles, or tears as shown in Figure 13 above.

NOTE: Observe the following cautions to assure that your membrane installation is proper:

- Secure the sonde tightly so that it will not move during membrane installation.
- Wash hands before installation and do not allow finger oils or O-ring lubricant to touch the probe face or the membrane.
- Use caution when replacing the probe guard that you do not touch the membrane. If you suspect that the membrane has been damaged, replace it immediately.

2.3.2 STEP 2 - INSTALLING THE PROBES

Remove the calibration cup from your sonde by hand as shown in Figure 14, to expose the bulkhead.

Figure 14

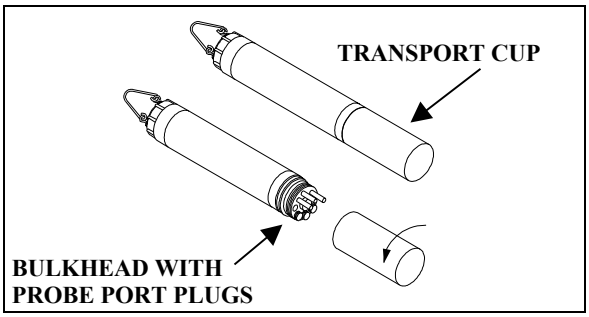

REMOVING THE PORT PLUGS

Using the long extended end of the probe installation tool supplied in the YSI 6570 Maintenance Kit, remove the port plugs. Save all the port plugs for possible future use.

There are a variety of probe options for the sondes. Figures 15, 16 and 17 illustrate the uses of the common tool for port plug removal.
Note that this tool will also be used to install the various probes.

If the tool is misplaced or lost, you may use 7/64" and 9/64" hex keys as substitutes.

Figure 15

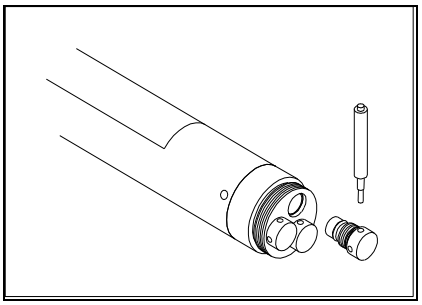

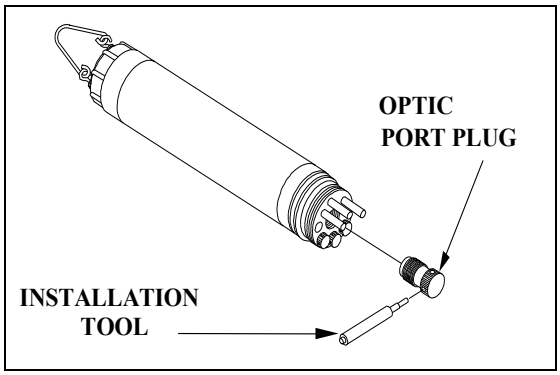

Figure 16

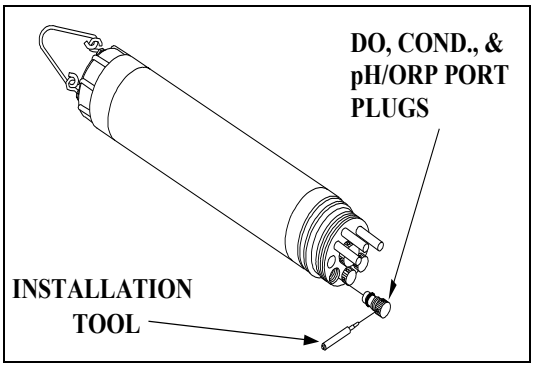

Figure 17

NOTE: You may need pliers to remove the ISE port plugs, but do not use pliers to tighten the ISE probes. Hand-tighten only.

Now refer to Figures 19-24 to find the probe locations in your sonde.

Figure 18

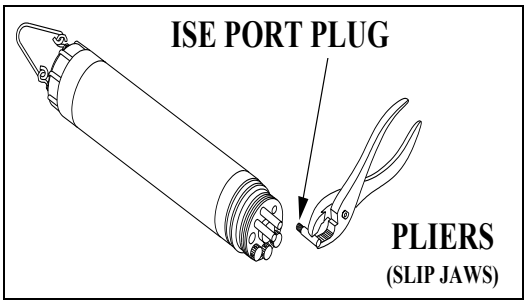

600XL & 600XLM SONDE BULKHEAD

3 Port Sonde: 1 Rapid Pulse DO, 1 Conductivity/Temperature, and 1 pH/ORP

- 6562 Dissolved oxygen probe = 3-pin connector
- 6560 Conductivity/Temperature = 6-pin connector
- 6561 pH probe = 4 pin connector
- 6565 Combo pH/ORP probe = 4 pin connector

Figure 19

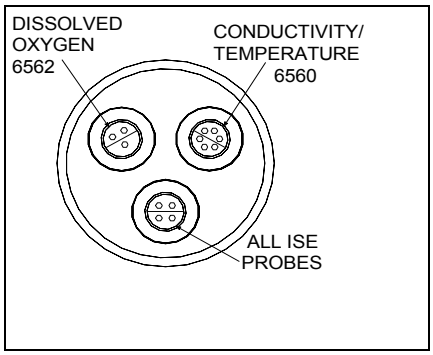

6600V2-2 SONDE BULKHEAD

8 Port Sonde: 1 Rapid Pulse DO, 1 Conductivity/Temperature, 2 Optical, 3 ISE, 1 pH/ORP

- 6562 Dissolved oxygen probe = 3-pin connector
- 6560 Conductivity/Temperature = 6-pin connector
- 6561 or 6561FG pH probe = 4 pin connector
- 6565 or 6565FG pH/ORP probe = 4 pin connector
- 6566 Fouling Resistant pH/ORP probe = 4 pin connector
- 6882 Chloride Probe = leaf spring connector
- 6883 Ammonium Probe = leaf spring connector
- 6884 Nitrate Probe = leaf spring connector
- 6026 Turbidity Probe, Wiping = 8 pin connector
- 6136 Turbidity Probe, Wiping = 8 pin connector
- 6025 Chlorophyll Probe, Wiping = 8 pin connector
- 6130 Rhodamine WT Probe, Wiping = 8 pin connector
- 6150 Optical Dissolved oxygen probe = 8 pin connector
- 6131 PC-Blue-green Algae probe = 8 pin connector
- 6132 PE-Blue-green Algae probe = 8 pin connector

Figure 20A

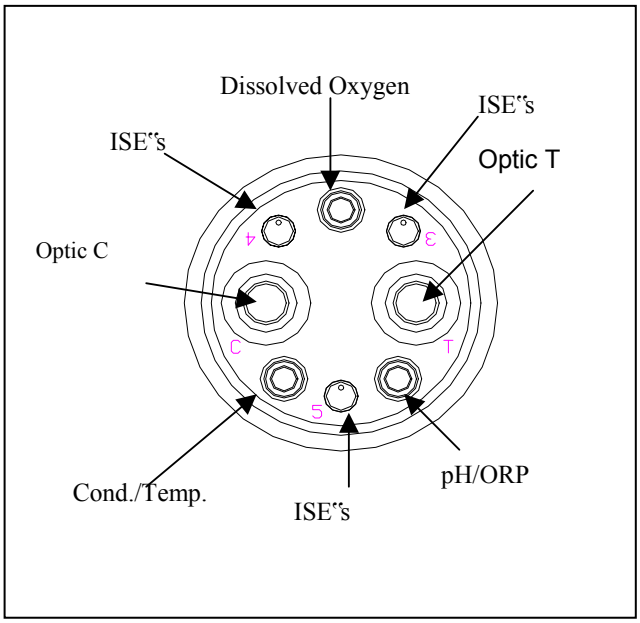

6600EDS V2-2 SONDE BULKHEAD

5 Port Sonde: 1 Rapid Pulse DO, 1 Conductivity/Temperature, 2 Optical, 1 pH/ORP

Figure 20B

- 6562 Dissolved oxygen probe = 3-pin connector
- 6560 Conductivity/Temperature = 6-pin connector
- 6561 or 6561FG pH probe = 4 pin connector
- 6565 or 6565FG pH/ORP probe = 4 pin connector
- 6566 Fouling Resistant pH/ORP probe = 4 pin connector
- 6026 Turbidity Probe, Wiping = 8 pin connector
- 6136 Turbidity Probe, Wiping = 8 pin connector
- 6025 Chlorophyll Probe, Wiping = 8 pin connector
- 6130 Rhodamine WT Probe, Wiping = 8 pin connector
- 6150 Optical Dissolved oxygen probe = 8 pin connector
- 6131 PC-Blue-green Algae probe = 8 pin connector
- 6132 PE-Blue-green Algae probe = 8 pin connector

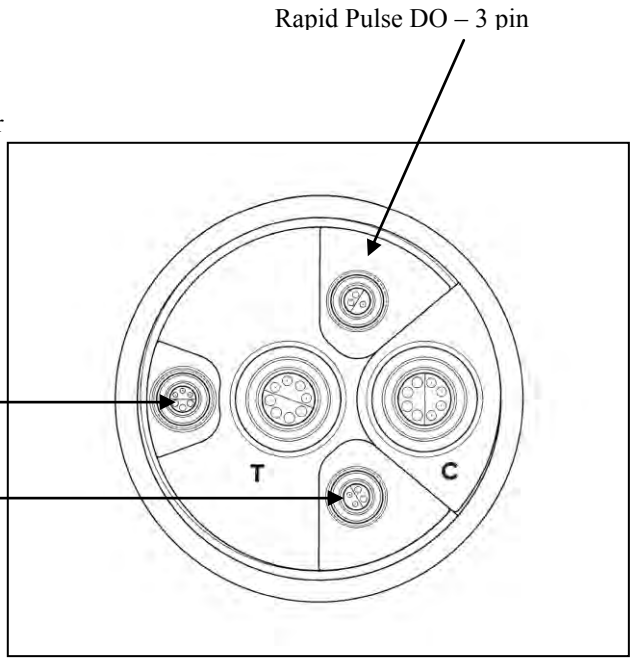

6600V2-4 SONDE BULKHEAD

6 Port Sonde: 1 Conductivity/Temperature, 4 Optical, 1 pH/ORP

Figure 20C

- 6560 Conductivity/Temperature = 6-pin connector
- 6561 or 6561FG pH probe = 4 pin connector
- 6565 or 6565FG pH/ORP probe = 4 pin connector
- 6566 Fouling Resistant pH/ORP probe = 4 pin connector
- 6026 Turbidity Probe, Wiping = 8 pin connector
- 6136 Turbidity Probe, Wiping = 8 pin connector
- 6025 Chlorophyll Probe, Wiping = 8 pin connector
- 6130 Rhodamine WT Probe, Wiping = 8 pin connector
- 6150 Optical Dissolved oxygen probe = 8 pin connector
- 6131 PC-Blue-green Algae probe = 8 pin connector
- 6132 PE-Blue-green Algae probe = 8 pin connector

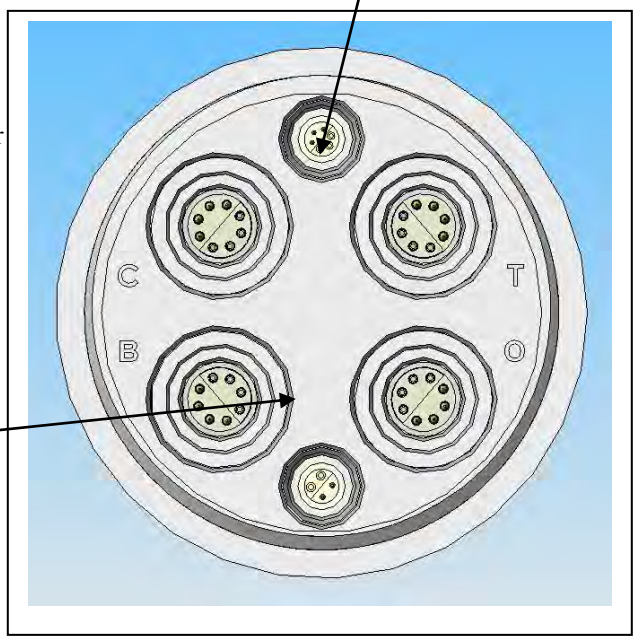

6820V2-1 & 6920V2-1 SONDE BULKHEADS

7 Port Sonde: 1 Rapid Pulse DO, 1 Conductivity/Temperature, 1 Optical, 1 pH/ORP, 3 ISE

Figure 21A

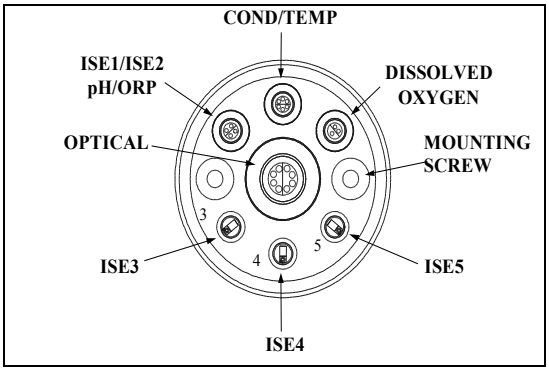

- 6562 Dissolved oxygen probe = 3-pin connector
- 6560 Conductivity/Temperature = 6-pin connector
- 6561 or 6561FG pH probe = 4 pin connector
- 6565 or 6565FG pH/ORP probe = 4 pin connector
- 6566 Fouling Resistant pH/ORP probe = 4 pin connector
- 6882 Chloride Probe = leaf spring connector
- 6883 Ammonium Probe = leaf spring connector
- 6884 Nitrate Probe = leaf spring connector
- 6026 Turbidity Probe, Wiping = 8 pin connector
- 6136 Turbidity Probe, Wiping = 8 pin connector
- 6025 Chlorophyll Probe, Wiping = 8 pin connector
- 6130 Rhodamine WT Probe, Wiping = 8 pin connector
- 6150 Optical Dissolved oxygen probe = 8 pin connector
- 6131 PC-Blue-green Algae probe = 8 pin connector
- 6132 PE-Blue-green Algae probe = 8 pin connector

6820V2-2 & 6920V2-2 SONDE BULKHEADS

5 Port Sonde: 1 Conductivity/Temperature, 2 Optical, 1 pH/ORP, 1 ISE

Figure 21B

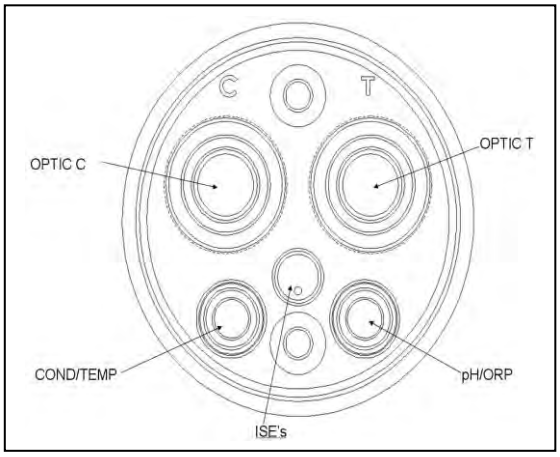

- 6560 Conductivity/Temperature = 6-pin connector
- 6561 or 6561FG pH probe = 4 pin connector
- 6565 or 6565FG pH/ORP probe = 4 pin connector
- 6566 Fouling Resistant pH/ORP probe = 4 pin connector
- 6882 Chloride Probe = leaf spring connector
- 6883 Ammonium Probe = leaf spring connector
- 6884 Nitrate Probe = leaf spring connector
- 6026 Turbidity Probe, Wiping = 8 pin connector
- 6136 Turbidity Probe, Wiping = 8 pin connector
- 6025 Chlorophyll Probe, Wiping = 8 pin connector
- 6130 Rhodamine WT Probe, Wiping = 8 pin connector
- 6150 Optical Dissolved oxygen probe = 8 pin connector
- 6131 PC-Blue-green Algae probe = 8 pin connector
- 6132 PE-Blue-green Algae probe = 8 pin connector

600LS BULKHEAD

If are working with a 600LS, all sensors will have been installed at the factory.

Figure 21C

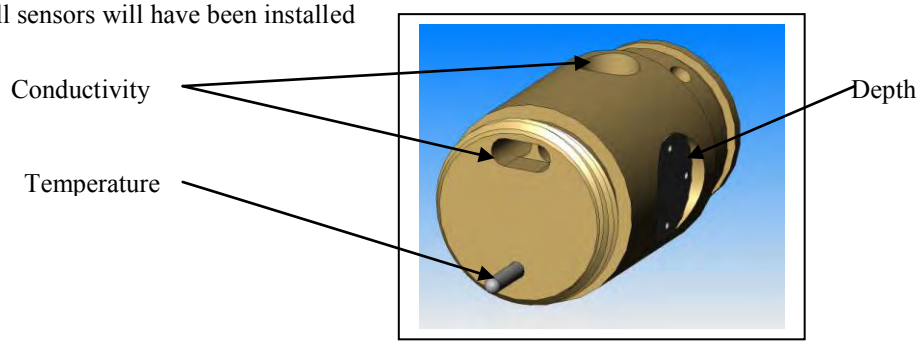

600R BULKHEAD

If are working with a 600R sonde, your instrument will arrive with the probes installed.

Figure 22

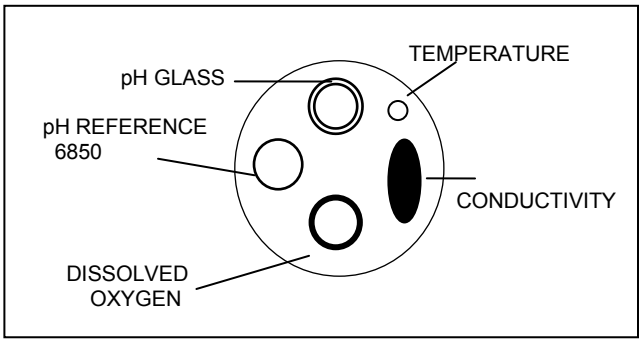

600QS BULKHEAD

If are working with a 600QS sonde, your instrument will arrive with the probes installed.

Figure 23

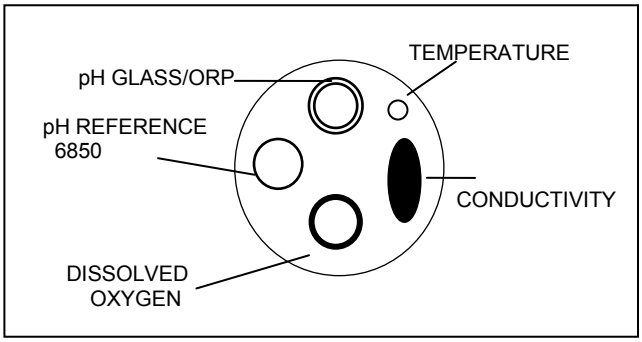

600 OMS V2-1 BULKHEAD

The conductivity sensor (module/port) for the 600 OMS V2-1 is factory installed. Optical probes (turbidity, chlorophyll, rhodamine WT, ROX optical DO, BGA-PC, and BGA-PE) are threaded into the optical port on the bottom of the sonde by the user.

Figure 24

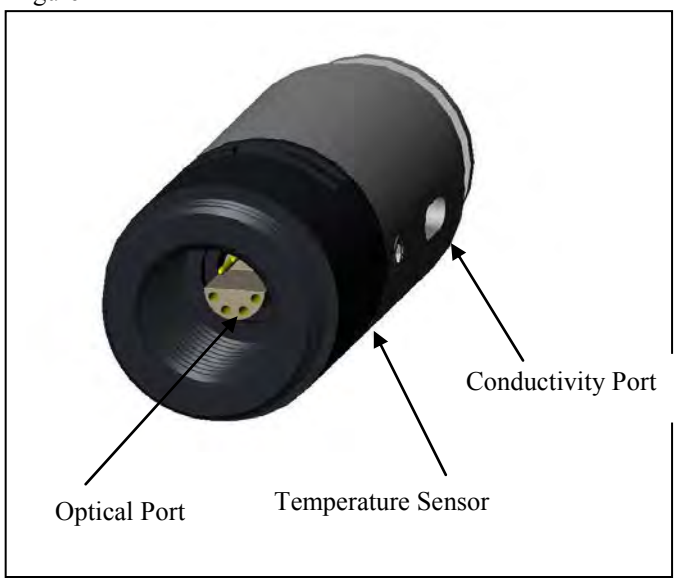

LUBRICATE O-RINGS

Apply a thin coat of O-ring lubricant, supplied in the YSI 6570 Maintenance Kit, to the O-rings on the connector side of each probe that is to be installed.

***CAUTION:* Make sure that there are NO contaminants between the O-ring and the probe. Contaminants that are present under the O-ring may cause the O-ring to leak when the sonde is deployed.**

Figure 25

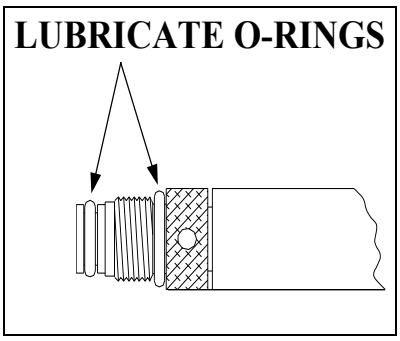

NOTE: Before installing any probe into the sonde bulkhead, be sure that the probe port is free of moisture. If there is moisture present, you may use a can of compressed air to blow out the remaining moisture.

INSTALLING THE TURBIDITY, CHLOROPHYLL, RHODAMINE WT , BGA-PHYCOCYANIN, BGA-PHYCOERYTHRIN, AND ROX OPTICAL DISSOLVED OXYGEN PROBES

If you are using any of optical probes listed, it is recommended that the optical sensors be installed first. If you are not installing one of these probes, do not remove the port plug, and go on to the next probe installation.

Figure 26

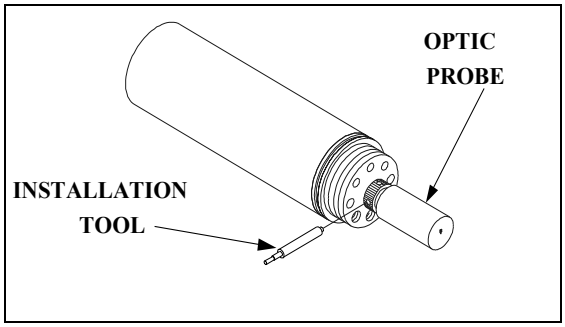

All optical probes, 6136 turbidity, 6025 chlorophyll, 6130 Rhodamine WT, 6131 Phycocyanin Blue-green algae, 6132 Phycoerythrin-Blue-green algae, and 6150 ROX Optical DO are installed in the same way. Install the probe into the center port, seating the pins of the two connectors before you begin to tighten. Tighten the probe nut to the bulkhead using the short extended end of the tool supplied with the probe. Do not over-tighten.

CAUTION: Be careful not to cross-thread the probe nut.

The YSI 6820V2-1 and 6920V2-1 sondes can accept a single turbidity, chlorophyll, Rhodamine WT, BGA-PC, BGA-PE, or ROX DO probe. The 6600V2-2, 6600EDS V2-2, 6820V2-2, and 6920V2-2 sondes can accept and utilize two of the six optical sensors at the same time. The two optical ports of these sondes are labeled “T” and “C” on the sonde bulkhead. Each port can accept any of the six sensors so be sure to remember which sensor was installed in which port so that you will later be able to set up the sonde software correctly. The 6600V2-4 sonde can accept and utilize four of the six optical sensors at the same time. The four optical ports of this sonde are labeled “T” , “C”, “B”, and “O” on the sonde bulkhead. Each port can accept any of the six sensors so be sure to remember which sensor was installed in which port so that you will later be able to set up the sonde software correctly.

INSTALLING THE 6562 RAPID PULSE DISSOLVED OXYGEN PROBE, CONDUCTIVITY/TEMP AND pH/ORP PROBES

Figure 27

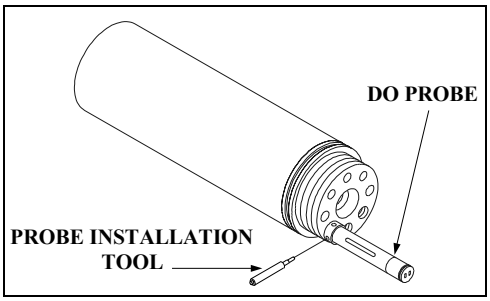

Insert the probe into the correct port and gently rotate the probe until the two connectors align.

The probes have slip nuts that require a small probe installation tool to tighten the probe. With the connectors aligned, screw down the probe nut using the long extended end of the probe installation tool. Do not over-tighten.

CAUTION: Do not cross thread the probe nut.

INSTALLING THE ISE PROBES

The Ammonium, Nitrate and Chloride ISE probes do not have slip nuts and should be installed without tools. Use only your fingers to tighten. Any ISE probe can be installed in any of the three ports labeled “3”, “4”, and “5” on the sonde bulkhead of the 6820V2-1, 6920V2-1, and 6600V2-2 sondes or the single ISE port on the 6820V2-2 and 6920V2-2 bulkheads. Be sure to remember which sensor was installed in which port so that you will later be able to set up the sonde software correctly.

Figure 28

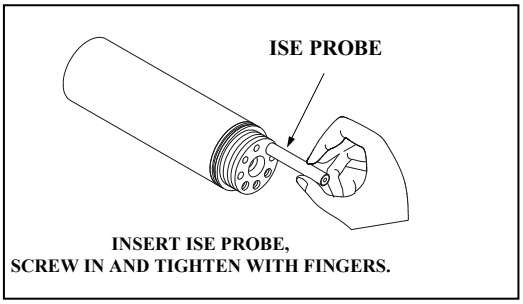

IMPORTANT: Make sure that the probe nut or probe body of the ISE probes are seated directly on the sonde bulkhead. This will ensure that connector seals will not allow leakage.

Figure 29

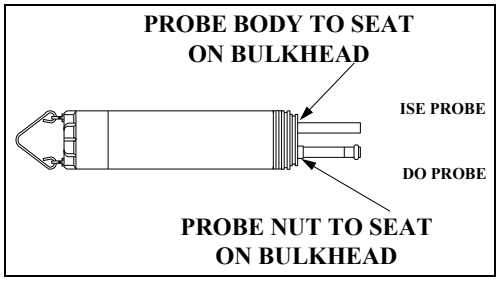

INSTALLING THE PROBE GUARD

Included with each sonde is a probe guard. The probe guard protects the probes during calibration and measurement procedures. Once the probes are installed, install this guard by aligning it with the threads on the bulkhead and turn the guard clockwise until secure.

CAUTION: Be careful not to damage the Rapid Pulse DO membrane during installation of the probe guard.

Figure 30 shows the YSI 6820V2-1/6820V2-2/6920V2-1/6920V2-2 probe guard; the guard for the 6600V2-2/6600V2-4 is similar. The YSI 600R, 600QS, 600XL and 600XLM probe guards resemble Figure 31.

Figure 30

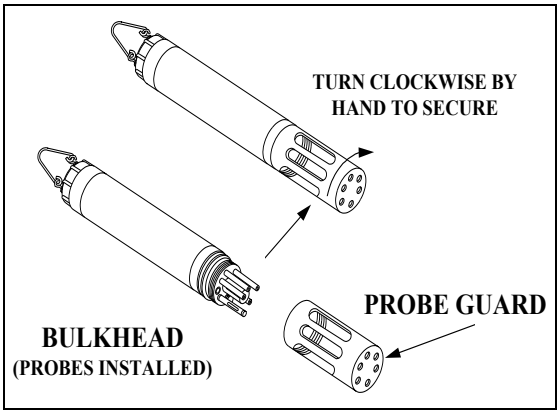

Figure 31

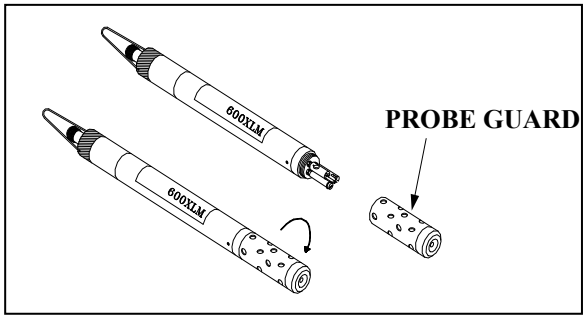

2.3.3 STEP 3 - POWER

Some type of external power supply is required to power the YSI 600R, 600QS, 600XL 6820V2-1, and the non-battery version of the 600 OMS V2-1sondes. The YSI 6920V2-1, 6920V2-2, 6600V2-2, 6600EDS V2-2, 6600V2-4, 600XLM, and battery version of the 600 OMS V2-1sondes have internal batteries or can run on external power.

If you have purchased a YSI 650 MDS display/logger, attaching your sonde to the display/logger will allow your sonde to be powered from the batteries or the external power of the display/logger. See **Section 3, Displays/Loggers,** for power options.

The battery-powered version of this instrument is powered by alkaline batteries, which the user must remove and dispose of when the batteries no longer power the instrument. Disposal requirements vary by country and region, and users are expected to understand and follow the battery disposal requirements for their specific locale.

The circuit board in this instrument contains a manganese dioxide lithium "coin cell" battery that must be in place for continuity of power to memory devices on the board. This battery is not user serviceable or replaceable. When appropriate, an authorized YSI service center will remove this battery and properly dispose of it, per service and repair policies.

POWER FOR LAB CALIBRATION

A YSI 6038 (110 VAC) or 6651 (64-240 VAC) Power Supply is required for sondes without internal batteries when using them with a PC for calibration and setup. Sondes with internal batteries do not require a power supply, but using the sonde with a power supply in the lab is often convenient and extends battery life. Most adapters include a short pigtail for power that plugs into the power supply. After attaching the four-pin connector from the power supply to the pigtail, simply plug the power supply into the appropriate AC outlet.

See **Section 2.2, Connecting Your Sonde**, for specific information on cables, adapters and power supplies required for connecting your sonde to various devices.

The system configuration best suited for initial setup is shown in Figure 32.

Figure 32

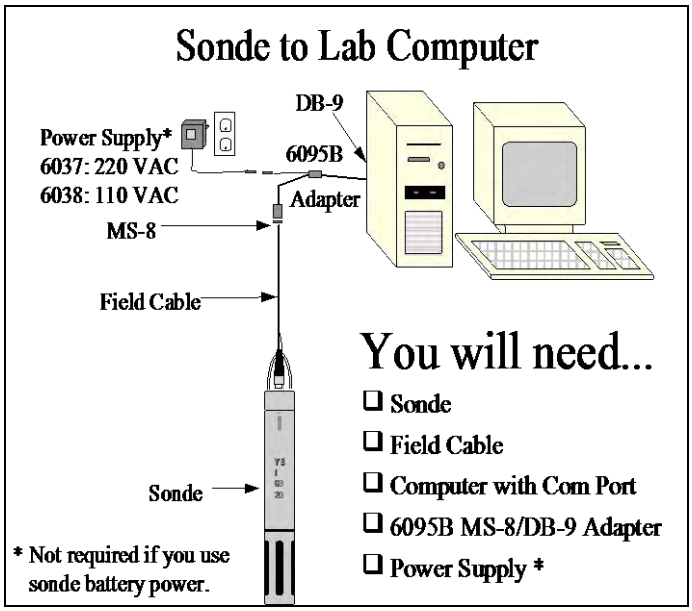

INSTALLING BATTERIES

The 600XLM, 6600V2-2, 6600EDS V2-2, 6600V2-4, 6920V2-1, 6920V2-2 and battery version of the 600 OMS V2-1are the sondes that use alkaline batteries for power. A set of batteries is supplied with each of these sondes. If you do not have one of these sonde model types, you may skip this section.

INSTALLING BATTERIES INTO THE YSI 600XLM OR 600 OMS V2-1 SONDES

To install 4 AA-size alkaline batteries into the sonde, refer to the following directions and Figure 33.

Grasp the cylindrical battery cover and unscrew by hand. Then slide the battery lid up and over the bulkhead connector. Insert batteries, paying special attention to polarity. Labeling on the battery compartment posts describes the orientation. It is usually easiest to insert the negative end of battery first and then "pop" the positive terminal into place.

Figure 33

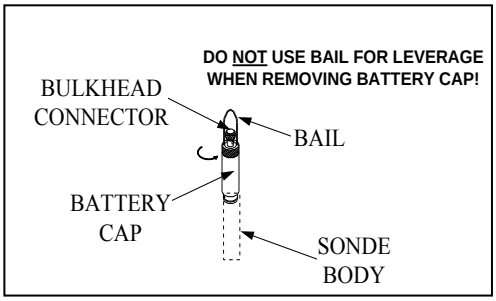

Check the O-ring and sealing surfaces for any contaminants that could interfere with the O-ring seal of the battery chamber.

***CAUTION:* Make sure that there are NO contaminants between the O-ring and the sonde. Contaminants that are present under the O-ring may cause the O-ring to leak when the sonde is deployed.**

Lightly lubricate the o-ring on the outside of the battery cover. DO NOT lubricate the internal o-ring.

Return the battery lid and tighten by hand.
DO NOT OVER-TIGHTEN.

Figure 34

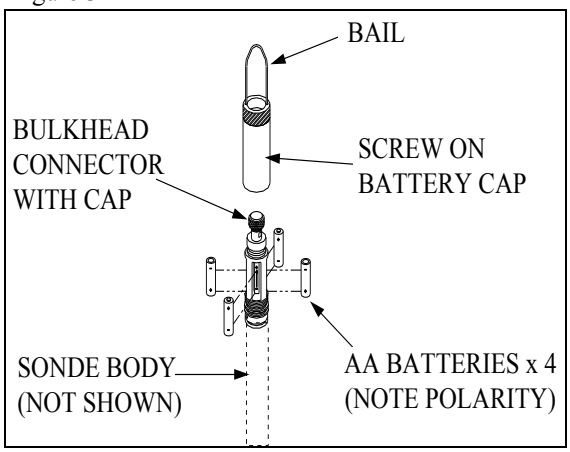

INSTALLING BATTERIES INTO THE YSI 6600V2-2, 6600EDS V2-2, AND 6600V2-4 SONDES

Figure 35

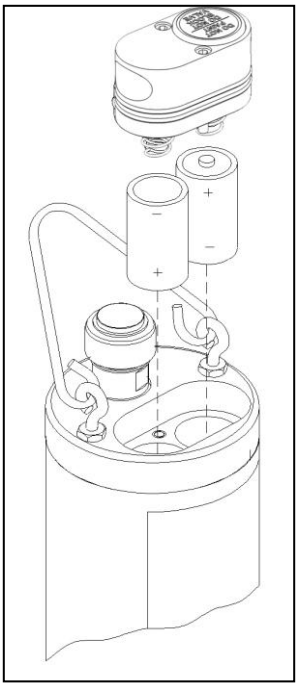

IMPORTANT SAFETY FEATURE: The 116003 battery lid for the 6600V2-2, 6600EDS V2-2, and 6600V2-4 is equipped with a safety pressure-release valve. The valve will vent off any pressure build up in the battery compartment from waste gas that could be created by battery failure, improperly marked or installed batteries, flooding, and dead or heavily discharged batteries. Pressure from the waste gas can deform the battery compartment and cause the sonde to shatter, projecting fragments from the sonde casing in all directions. People near a sonde that shatters could suffer serious puncture wounds and serious eye injuries. DO NOT defeat this safety feature by blocking the valve or painting over or in close proximity to the valve. DO NOT attempt to disassemble the safety valve.

Install 8 C-size alkaline batteries according to the following directions and Figure 35.

Using the 9/64" hex driver supplied with the 6600V2-2, 6600EDS V2-2 and 6600V2-4 loosen the battery lid screws.

NOTE: The battery lid screws are captive. It is not necessary to remove them from the lid completely.

Remove the battery lid and install the batteries, as shown. If installing or replacing the batteries, test batteries for proper polarity and voltage and observe the correct polarity before installing the batteries into the battery chamber.

***CAUTION*: Be sure the orange O-ring is installed in the groove of the lid. The o-ring is designed with retention tabs to prevent it from falling out of the grove during installation. Check the O-ring and sealing surfaces for any contaminates which could interfere with the O-ring seal of the battery chamber. Remove any contaminates present. Also clean the protective O-rings which are located the side of the battery lid. Apply a small amount of grease to the threads of each screw to prevent binding. See the next section and Figures 35A through 35L for details on proper installation of the battery lid o-ring.**

The updated face seal for the 6600 sonde battery lid incorporates six retaining tabs to hold the face seal in the seal groove during installation, allowing consistent and effective sealing after battery replacement. In order for this feature to work properly, the retaining tabs must be correctly seated in the battery lid"s seal groove to prevent it from becoming dislodged during handling. If the seal is not installed correctly it can fall out of its groove during battery lid installation and then can be crushed during assembly. This may cause damage to the seal and cause battery compartment flooding when the sonde is deployed. The following procedure is a recommended method to properly retain the seal in its groove:

1. Place seal on the battery lid groove so that it follows the profile of the groove and is centered about the two middle retaining tabs.

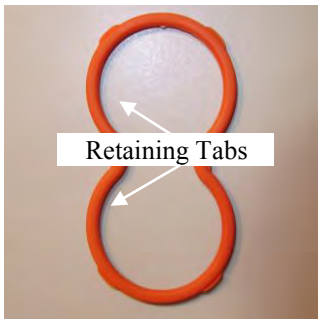

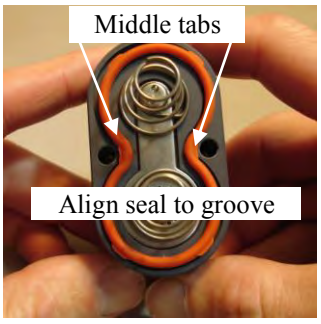

Figures 35A and 35B

2. Press two of the outermost retaining tabs down into the groove. It should be clear that the retaining tabs have recessed into the groove along with the seal so that the tabs outermost edges are at or below the battery lid"s mounting surface.

Figures 35C and 35D

3. Press the remaining two outermost retaining tabs into the groove and check to make sure the tabs have been recessed as before. Verify that the other two previously seated retaining tabs have not been forced from their position in the groove.

Figures 35E and 35F

4. Place your thumbs on the seal about a ¼" or so from the sides of the center retaining tab and press the seal down into the groove while sliding your thumbs towards each other. This stretches the seal to fit the profile of the groove allowing the center tab to be seated properly. You may need to use the tip of one of your thumbs to finish pressing the tab into place.

Figures 35G and 35H

5. Press the remaining middle retaining tab into the groove as before and verify that none of the other retaining tabs have been forced from their positions in the groove during this part of the seal installation.

Figures 35I and 35J

6. To ensure that all the retaining tabs are properly seated in the seal groove you can apply pressure to the seal forcing it into the groove at the location of each tab. This will further seat each tab into the groove allowing it to capture the seal.

Figures 35K and 35L

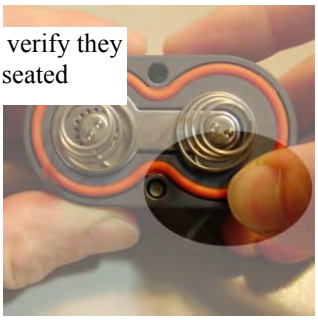

***CAUTION:* Before installing the battery lid, ensure that the pressure release valve is closed. If the pressure release valve is open, DO NOT install (see Figures 35M and 35N). The valve**

cannot be reset and the battery lid must be replaced before sonde deployment. Contact YSI Technical Support for instructions.

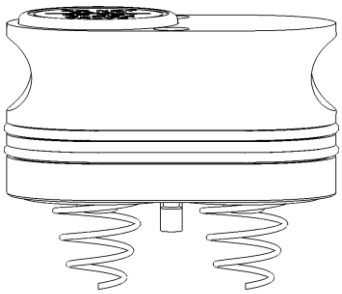

Figure 35M: Closed valve
OK to Deploy

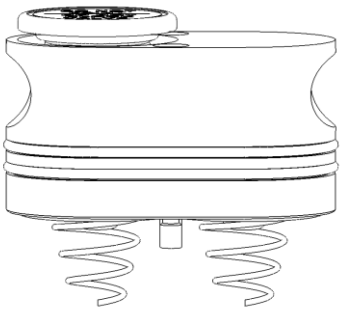

Figure 35N: Open valve
DO NOT Deploy

Lightly lubricate the o-rings on the outside of the battery cover. DO NOT lubricate the orange internal o-ring.

Return the battery lid and HAND tighten the screws with the hex driver until snug. *DO NOT OVER TIGHTEN.*

***CAUTION*: Over-tightening the screws may cause the battery compartment to flood. Do NOT use power tools to tighten the battery lid screws.**

With the battery cover installed and secured, check the battery voltage in the sondes Status Menu. The voltage must be 12.0 volts or higher with new cells. A voltage less then 12.0 volts could indicate that a cell was installed upside down or that one of the cells is not at full strength.

***CAUTION: Remove Batteries When Not in Use.* As with any battery-powered instrumentation, batteries should be removed before short or long-term storage. Even with the new battery lid, batteries can leak, releasing toxic and corrosive battery acid and damaging equipment.**

INSTALLING BATTERIES IN THE 6920V2-1 AND 6920V2-2 SONDES

To install the 8 AA-size alkaline batteries into the sonde, refer to the following directions and Figures 36 and 37.

Position the bail so that it is perpendicular to the sonde and use it as a lever to unscrew the battery cap by hand. Then slide the battery lid up and over the bulkhead connector.

Insert batteries, paying special attention to polarity. Labeling on the top of the sonde body describes the orientation.

Figure 36

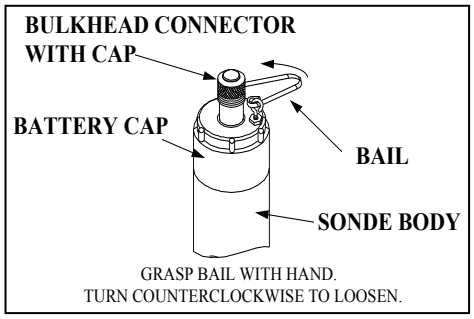

Check the O-rings and sealing surfaces for any contaminants that could interfere with the seal of the battery chamber.

***CAUTION:* Make sure that there are NO contaminants between the O-ring and the sonde. Contaminants that are present under the O-ring may cause the O-ring to leak when the sonde is deployed.**

Lightly lubricate the o-rings on the bottom of the threads and on the connector stem as shown in Figure 37.

Return the battery lid and tighten by hand. *DO NOT OVER-TIGHTEN.*

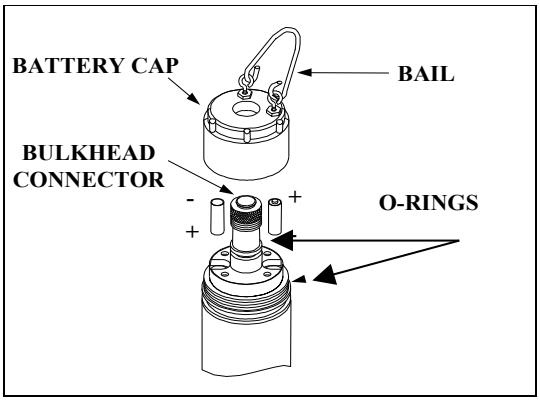

Figure 37

2.3.4 STEP 4 - CONNECTING A FIELD CABLE

All YSI 6600V2-2, 6600EDS V2-2, 6600V2-4, 6920V2-1, 6920V2-2, 6820V2-2, 600XLM, 600QS, and 600 OMS V2-1sondes have a sonde-mounted cable connector for attachment of the field cable. Some versions of the 600R, 600XL, and 6820V2-1 sondes also have this connector.

However, some versions of the YSI 600R, 600XL, and 6820V2-1sondes have permanently attached "integral" cables. If your sonde has a cable that is non-detachable, the next section will not be relevant.

To attach a field cable to the sonde connector, remove the waterproof cap from the sonde connector and set it aside for later reassembly during deployment or storage. Then connect your field cable to the sonde connector.

Figure 38

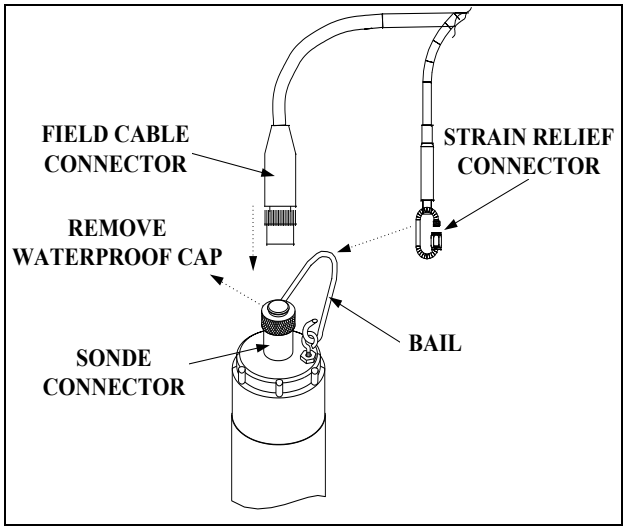

A built-in "key" will ensure proper pin alignment. Rotate the cable gently until the "key" engages and then tighten the connectors together by rotating clockwise. Attach the strain relief connector to the sonde bail. Rotate the strain relief connector nut to close the connector's opening.

For all of the sondes, the other end of the cable is a military-style 8-pin connector (MS-8). Through use of a YSI 6095B MS-8 to DB-9 adapter, the sonde may be connected to a computer for setup, calibration, real-time measurement, and uploading files.

This MS-8 connector also plugs directly into the 650 MDS display/logger. This instrument contains a microcomputer that allows it to be used in a similar manner to that of a terminal interface to a PC.

As an alternative to the field cable, you may use a YSI 6067B calibration cable for laboratory interaction with the sonde. In this case, simply plug the proper end of the cable into the sonde connector and attach the DB-9 connector of the cable to the Com port of your computer.

CAUTION: The 6067B cable is for laboratory use only -- it is not waterproof and should not be submersed!

Sondes that are equipped with level sensors use vented cables. See **Appendix G, Using Vented Level**, for detailed information.

2.4 ECOWATCH FOR WINDOWS -GETTING STARTED

This section will describe how to get started with EcoWatch for Windows, but detailed information is provided in **Section 4, EcoWatch for Windows**, or a convenient Windows Help section that is part of the software. It is recommended that you thoroughly read Section 4 or use the Help function for a comprehensive understanding of EcoWatch for Windows.

2.4.1 INSTALLING ECOWATCH FOR WINDOWS

EcoWatch for Windows software must be used with an IBM-compatible PC with a 386 (or better) processor. The computer should also have at least 4MB of RAM and Windows Version 3.1 or later.

Place the EcoWatch for Windows compact disk in your CD ROM drive. Select **Start**, then **Run** and type **d:\setup.exe** at the prompt. Press **Enter** or click on "**OK**" and the display will indicate that EcoWatch is proceeding with the setup routine. Simply follow the instructions on the screen as the installation proceeds.

2.4.2 RUNNING ECOWATCH FOR WINDOWS

To run EcoWatch for Windows, simply select the EcoWatch icon on your desktop or from the Windows Program Menu. For help with the EcoWatch program, see **Section 4, EcoWatch** or use the Help section of the software.

2.4.3 ECOWATCH FOR WINDOWS SETUP

To setup the EcoWatch software for use with a sonde, select the sonde icon on the toolbar, and then the **proper** Com port to which your sonde is connected. If the default setting is correct, it does not need to be changed. Click "**OK**" to open a terminal window.

From the **Comm** Menu, select the **Settings** option to check the baud rate. The baud rate should be 9600. If it is not, select 9600 from the list and press **Enter**.

From the **Settings** Menu, select the **Font/Color** and **Background Color** options to choose a color scheme for the EcoWatch for Windows menus.

2.5 SONDE SOFTWARE SETUP

There are two sets of software at work in any YSI environmental monitoring system. One is resident in your PC and is called EcoWatch for Windows. The other software is resident in the sonde itself. In this section, you will first make sure that the language associated with your sonde software is appropriate to your application and change it if necessary. You will set up the sonde software using EcoWatch for Windows as the interface device between the sonde and your PC.

SETTING UP THE SONDE SOFTWARE LANGUAGE

The menus in the sonde software can be viewed in English, German, or French. However, the choice of language CANNOT be made from the sonde software itself. Rather the choice must be selected via a complete update of the software itself from the YSI Website as described below. Note that the menus in your sonde will be shown in English when you receive the instrument and, if this is your language of choice, no further action is required and you should skip to the next section. If you wish to change the language of your menus to German or French, use the following instructions.

Follow the step-by-step instructions below to change the language for the menus in your 6-series sonde:

- Connect your sonde to the serial port of a PC with access to the Internet using the proper cable as described in the previous section of this manual.
- Make sure that the sonde is powered with either internal batteries or a suitable power supply.
- Access the YSI Environmental Software Downloads page at www.ysi.com/edownloads or go to main page at www.ysi.com and click on Support button in green bar.
- Log in, or if a first time user, fill out the registration form and wait for a login password via return E-mail.
- Click on the **Software** folder under the Software Downloads section.
- Inside the folder, click on the file *6-Series & 556MPS Code Updater, M-DD-YYYY* and save the file to a temporary directory on your computer.
- After the download is complete, run the file that you just downloaded and follow the on-screen instructions to install the YSI Code Updater on your computer. If you encounter difficulties, contact YSI Technical Support for advice.
- Run the YSI Code Updater software that you just installed on your computer. The following window will be displayed:

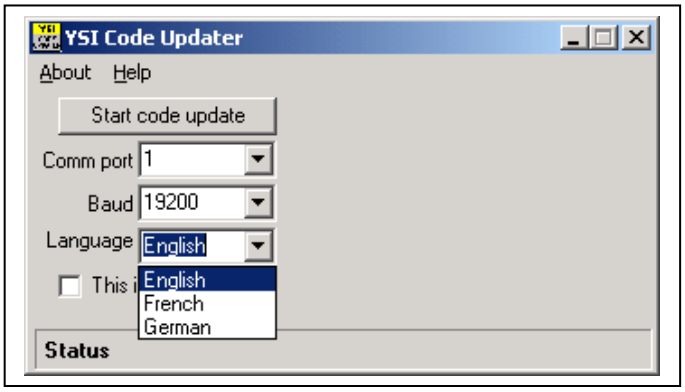

- Set the Comm port number to match the port to which you connected the sonde cable and make sure that the “This is an ADV6600” selection is NOT checked.

- **NEXT, SELECT THE LANGUAGE (ENGLISH, FRENCH, OR GERMAN) WHICH WILL BE USED IN YOUR SONDE MENUS.**

- Then click on the Start Code Update button. An indicator bar will show the progress of the upgrade as shown below.

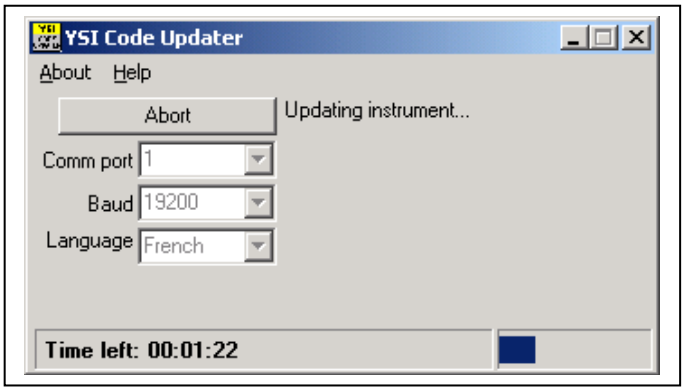

- When the update is finished (indicated on the PC screen as shown below), close the YSI Code Updater window (on the PC) by clicking on the "X" in the upper right corner of the window.

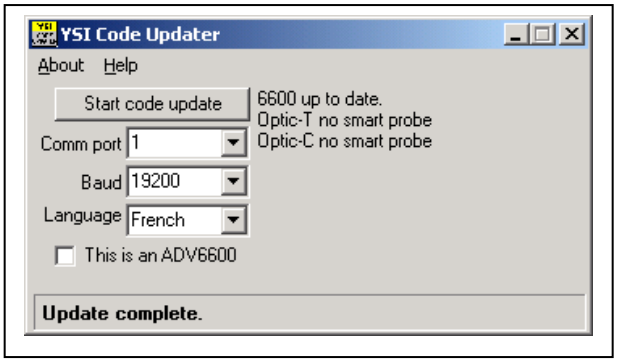

Your sonde menus will now appear in the language which you selected prior to running the updater. If you want to change the language associated with your sonde menu, you MUST rerun the YSI Code Updater and select the new language via this mechanism.

INTERFACING TO THE SONDE WITH ECOWATCH FOR WINDOWS

When you select **Sonde** from the EcoWatch for Windows menus, the PC-based software begins direct communication with the sonde-based software via standard VT100 terminal emulation.

In EcoWatch for Windows, select the sonde icon, . Then select the proper Com port and confirm by clicking **OK**. A window similar to that shown below will appear indicating connection to the sonde as shown in Figure 39. Type “**Menu**” after the # sign, press **Enter**, and the sonde Main menu will be displayed.

Figure 39

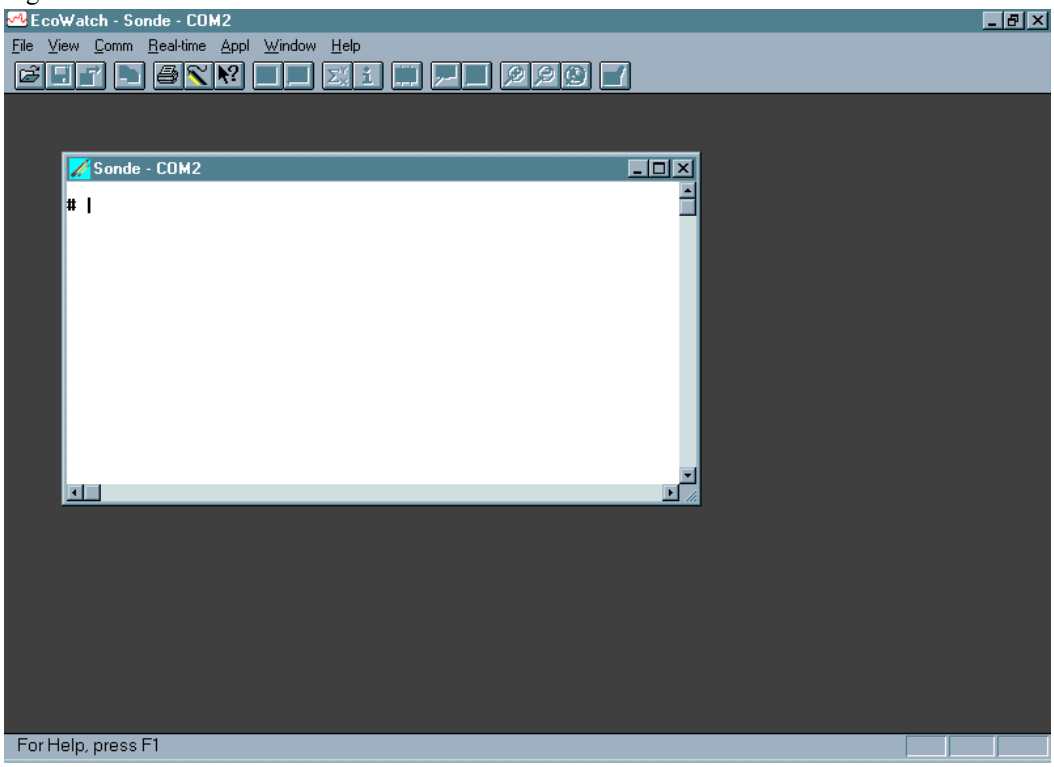

If your sonde has previously been used, the **Main menu** (rather than the **#** sign) may appear when communication is established. In this case simply proceed as described below. You will not be required to type "**Menu**".

If you are unable to establish interaction with the sonde, make sure that the cable is properly connected. If you are using external power, make certain that the YSI 6651 or 6038 power supply or other 12 vdc source is properly working. Recheck the setup of the Com port and other software parameters. Also refer to **Section 6, Troubleshooting**.

The sonde software is menu-driven. You select functions by typing their corresponding numbers. You do not need to press **Enter** after choosing a selection. Type the **0 or Esc** key to return to the previous menu.

Sonde Main Menu

```
------------------Main-----------------
1-Run                5-System
2-Calibrate          6-Report
3-File               7-Sensor
4-Status             8-Advanced

Select option (0 for previous menu):
```

Figure 40 - Sonde Menu Flow Chart

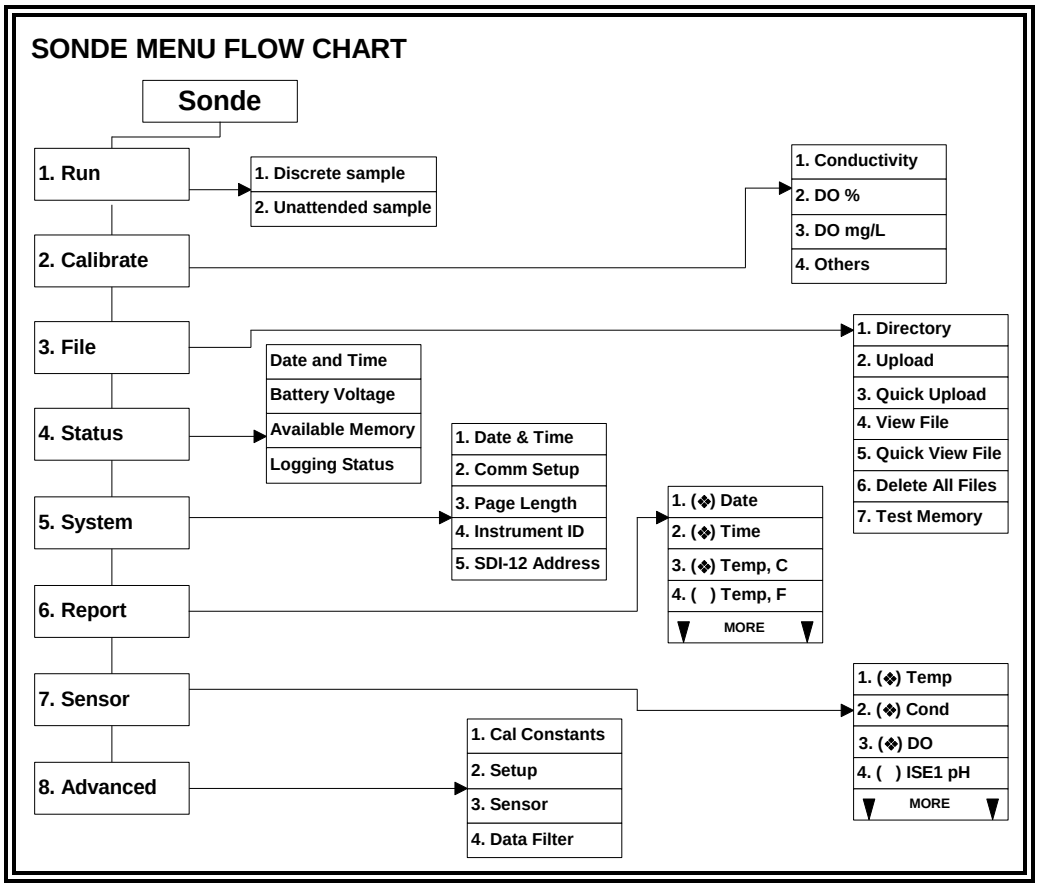

SYSTEM SETUP

At the Main menu, select **System**. The System Setup menu will be displayed.

System Setup Menu

```
1-Date & time
2-Comm setup
3-Page length=25
4-Instrument ID=YSI Sonde
5-Circuit board SN:00003001
6-GLP filename=00003001
7-SDI-12 address=0

Select option (0 for previous menu):
```

Select **1-Date & time**. An asterisk will appear next to each selection to confirm the entry. Press 4 and 5 to activate the date and time functions. Pay particular attention to the date format that you have chosen when entering date. You must use the 24-hour clock format for entering time. Option **4- ( ) 4 digit year** may be used so that the date will appear with either a two or four digit year display. If you do not enter the correct year format (8/30/**98** for 2-digit, 8/30/**1998** for 4 digit) your entry will be rejected.

```
-----------Date & time setup-----------
1-(*)m/d/y          4-( )4 digit year
2-( )d/m/y          5-Date=08/30/98
3-( )y/m/d          6-Time=11:12:30

Select option (0 for previous menu):
```

Select **4-Instrument ID** from the System setup menu to record the instrument ID number (usually the instrument serial number), and press **Enter**. A prompt will appear which will allow you to type in the serial number of your sonde. This will make sure that any data that is collected is associated with a particular sonde. Note that the selection **5-Circuit Board SN** shows the serial number of the PCB that is resident in your sonde (not the entire system as for Instrument ID). Unlike the **Instrument ID**, the user cannot change the **Circuit Board SN**. The **6-GLP filename** and **7-SDI-12 address** selections will be explained in Section 2.9.5

Press **Esc** or **0** to return to the **System setup** menu.

Then press **Esc** or **0** again to return to the **Main menu**.

```
------------------Main-----------------
1-Run               5-System
2-Calibrate         6-Report
3-File              7-Sensor
4-Status            8-Advanced

Select option (0 for previous menu):
```

ENABLING SENSORS

To activate the sensors that are in your sonde, select **Sensor** from the Sonde Main menu.

```
------------Sensors enabled------------
1-(*)Time
2-(*)Temperature
3-(*)Conductivity
4-(*)Dissolved Oxy
5-(*)ISE1 pH
6-(*)ISE2 Orp
7-(*)ISE3 NH4+
8-(*)ISE4 NO3-
9-( )ISE5 NONE
A-(*)Optic T Turbidity - 6136
B-(*)Optic C Chlorophyll

Select option (0 for previous menu):
```

Note that the exact appearance of this menu will vary depending upon the sensors that are available on your sonde. Enter the corresponding number to enable the sensors that are installed on your sonde. An asterisk indicates that the sensor is enabled.

When selecting any of the ISE or Optical ports, a submenu will appear. When this occurs, make a selection so that the sensor corresponds to the port in which the sensor is physically installed. Only ORP can be enabled as ISE2. Optic T, Optic C, Optic B, and Optic O generate a submenu on selection. Each optical port can have one of six probes (6136 Turbidity, 6025 Chlorophyll, 6130 Rhodamine WT, 6131 BGA-PC, 6132 BGA-PE, or 6150 ROX Optical DO) installed as indicated by the submenus.

NOTE CAREFULLY: It is NOT possible to simultaneously activate BOTH the 6562 Rapid Pulse polarographic dissolved oxygen sensor and the 6150 ROX Optical dissolved oxygen sensor. Activation of either sensor will automatically deactivate the other selection. Thus, users of 6600V2-2, 6600EDS V2-2, 6820V2-1, and 6920V2-1 sondes CANNOT measure oxygen with both types of sensors.

After all installed sensors have been enabled, press **Esc or 0** to return to the Main Menu.

ENABLING PARAMETERS

In order for a specific parameter to be displayed:

1. The sensor must first be enabled as described above.
2. That parameter must be activated in the Report Setup menu described below.

Select **Report** from the Main menu. A Report Setup menu similar to the one shown below will be displayed.

```
--------------Report setup-------------
1-(*)Date m/d/y     E-(*)Orp mV
2-(*)Time hh:mm:ss  F-(*)NH4+ N mg/L
3-(*)Temp C         G-( )NH4+ N mV
4-(*)SpCond mS/cm   H-( )NH3 N mg/L
5-( )Cond           I-(*)NO3- N mg/L
6-( )Resist         J-( )NO3- N mV
7-( )TDS            K-(*)Cl- mg/L
8-( )Sal ppt        L-( )Cl- mV
9-(*)DOsat %        M-(*)Turbid+ NTU
A-(*)DO mg/L        N-(*)Chl ug/L
B-( )DOchrg         O-(*)Chl RFU
C-(*)pH             P-(*)Battery volts
D-( )pH mV

Select option (0 for previous menu):
```

Note that the exact appearance of this menu will vary depending upon the sensors that are available and enabled on your sonde. The asterisks (*) that follow the numbers or letters indicate that the parameter will appear on all outputs and reports. To turn a parameter on or off, type the number or letter that corresponds to the parameter.

Note also that since a 6136 turbidity probe was selected in the Sensor menu above, the units of turbidity are presented as “turbid+ NTU”. If a 6026 turbidity probe (which was offered by YSI up until 2002) had been selected, the units of turbidity would be presented as “turbid NTU”. This designation is designed to differentiate the data from the two sensor types in later analysis.

For parameters with multiple unit options such as temperature, conductivity, specific conductance, resistivity and TDS, a submenu will appear as shown below for temperature, allowing selection of desired units for this parameter.

```
--------------Select units-------------
1-(*)NONE
2-( )Temp C
3-( )Temp F
4-( )Temp K

Select option (0 for previous menu): 2
```

After configuring your display with the desired parameters, press **Esc or 0** to return to the Main menu.

CHECKING ADVANCED SETTINGS

Select **Advanced** from the Main menu. The following menu will be displayed.

```
----------------Advanced--------------
1-Cal constants
2-Setup
3-Sensor
4-Data filter

Select option (0 for previous menu):
```

Select **Setup** from the Advanced menu.

```
-------------Advanced setup-----------
1-(*)VT100 emulation
2-( )Power up to Menu
3-( )Power up to Run
4-( )Comma radix
5-(*)Auto sleep RS232
6-(*)Auto sleep SDI12
7-( )Multi SDI12
8-( )Full SDI12

Select option (0 for previous menu): 0
```

Make sure that, other than **Auto sleep RS232**, all entries are activated or deactivated as shown above.

For sondes which will be used in sampling studies where the user is present and observes readings in real-time, **Auto sleep RS232** should usually be "off". For sondes that will be used in unattended monitoring studies, **Auto sleep RS232** should usually be "on". This is described in detail in **Section 2.9, Sonde Menu**. When this setup is verified, press **Esc** or **0** to return to the Advanced menu.

Select **3-Sensor** from the Advanced menu and make certain that the entries are identical to those shown below.

```
------------Advanced sensor-----------
1-TDS constant=0.65
2-Latitude=40
3-Altitude Ft=0
4-(*)Fixed probe
5-( )Moving probe
6-DO temp co %/C=1.1
7-DO warm up sec=40
8-( )Wait for DO
9-Wipes=1
A-Wipe int=5
B-SDI12-M/wipe=1
C-Turb temp co %/C=0.3
D-(*)Turb spike filter
E-Chl temp co %/C=0
F-( )Chl spike filter

Select option (0 for previous menu):
```

If you have a depth sensor installed, you can maintain the default settings of 40 and 0 for **2-Latitude and 3-Altitude**, respectively, without affecting your ability to learn the basic calibration and operation of the sonde. However, if you know the appropriate values for your location, change them. When this setup is verified, press **Esc** or **0** to return to the Advanced menu. For more information, see **Section 2.9.8, Advanced**.

The display under **3-Sensor** may be different from the one shown in the example above, depending on the sensors that are installed in your unit. For example, if you do not have a chlorophyll probe, the last two entries (which are relevant only to chlorophyll) will not appear.

When this setup is verified, press **Esc** or **0** to return to the Advanced menu. For a detailed explanation of the choices in the Advanced menu, see **Section 2.9.8, Advanced**. Press **Esc** or **0** to back up to the Main menu.

```
------------------Main-----------------
1-Run                5-System
2-Calibrate          6-Report
3-File               7-Sensor
4-Status             8-Advanced

Select option (0 for previous menu):
```

The sonde software is now set up and ready to calibrate and run.

2.6 GETTING READY TO CALIBRATE

2.6.1 INTRODUCTION

HEALTH AND SAFETY

Reagents that are used to calibrate and check this instrument may be hazardous to your health. Take a moment to review health and safety information in **Appendix A** of this manual. Some calibration standard solutions may require special handling.

CONTAINERS NEEDED TO CALIBRATE A SONDE

The calibration cup that comes with your sonde serves as a calibration chamber for all calibrations and minimizes the volume of calibration reagents required.

Although not recommended except in unusual circumstances, instead of the calibration cup, you may use laboratory glassware to perform some of the calibrations. If you do not use a calibration cup that is designed for the sonde, you are cautioned to do the following:

- ✓ Perform all calibrations with the Probe Guard installed. This protects the probes from possible physical damage.
- ✓ Use a ring stand and clamp to secure the sonde body to prevent the sonde from falling over. Much laboratory glassware has convex bottoms.
- ✓ Insure that all sensors are immersed in calibration solutions. Many of the calibrations factor in readings from other probes (e.g., temperature probe). The top vent hole of the conductivity sensor must also be immersed during calibrations.

CALIBRATION TIPS

1. If you use the Calibration Cup for calibration of either the Rapid Pulse Polarographic or ROX Optical DO sensors in water-saturated air, make certain to loosen the seal to allow pressure equilibration before calibration.

2. If you choose to calibrate your Rapid Pulse Polarographic or ROX Optical DO sensor in air-saturated water in a separate vessel, be sure to sparge the water with an aquarium pump and air-stone for at least 1 hour to assure that the water is truly saturated with air.

3. The key to successful calibration is to insure that the sensors are completely submersed when calibration values are entered. Use recommended volumes when performing calibrations.

4. For maximum accuracy, use a small amount of previously used calibration solution to pre-rinse the sonde. You may wish to save old calibration standards for this purpose.

5. Fill a bucket with ambient temperature water to rinse the sonde between calibration solutions or perform the calibration near a sink where the probes can be rinsed from the tap.

6. Have several clean, absorbent paper towels or cotton cloths available to dry the sonde between rinses and calibration solutions. Shake the excess rinse water off of the sonde, especially when the probe guard is installed. Dry off the outside of the sonde and probe guard. Making sure that the sonde is dry reduces carry-over contamination of calibrator solutions and increases the accuracy of the calibration.

7. Make certain that port plugs are installed in all ports where probes are not installed. It is extremely important to keep these electrical connectors dry.

USING THE CALIBRATION CUP

Follow these instructions to use the calibration cup for calibration procedures with all of the instruments except the 600R, 600QS, and 600 OMS V2-1. For these sondes, the over-the-guard bottle that comes with your sonde, must be used.

- ✓ Ensure that a gasket is installed in the gasket groove of the calibration cup bottom cap, and that the bottom cap is securely tightened. **Note:** Do not over-tighten as this could cause damage to the threaded portions of the bottom cap and tube.
- ✓ Remove the probe guard, if it is installed.
- ✓ Inspect the installed gasket on the sonde for obvious defects and if necessary, replace it with the extra gasket supplied.
- ✓ Screw the cup assembly into place on the threaded end of sonde and securely tighten. N**ote:** Do not over tighten as this could cause damage to the threaded portions of the bottom cap and tube.
- ✓ Sonde calibration can be accomplished with the sonde upright– i.e. the cable connector end of the sonde is oriented above the probe end, or inverted where the orientation is reversed. A separate clamp and stand, such as a ring stand, is required to support the sonde in the inverted position.
- ✓ When using the Calibration Cup for dissolved oxygen calibration in water-saturated air, make certain that the vessel is vented to the atmosphere by loosening the bottom cap or cup assembly, depending on orientation, and that approximately 1/8” of water is present in the cup.

NOTE CAREFULLY: If you are calibrating a 6136 turbidity sensor for use with a 6820V2-1 or 6920V2-1, you can use either the calibration cup supplied with your sonde or an optional extended length cup for the calibration. Please see the section below which describes the special calibration recommendations for this sensor.

RECOMMENDED VOLUMES OF CALIBRATION REAGENTS

The approximate volumes of the reagents are specified below for both the upright and inverted orientations. Note that the volume values are only estimates. The actual amount of calibrator solution required will depend on how many and what type of other probes are installed in you sonde bulkhead.

Table 1A 6820V2-1 and 6920V2-1 Sondes with Standard Calibration Cup*

Probe to Calibrate	Upright	Inverted
Conductivity	200ml	150ml
pH/ORP	125ml	175ml
ISE	125ml	175ml
All Optical Sensors	50ml	DO NOT CALIBRATE***

Table 1B 6820V2-1 and 6920V2-1 Sondes with Optional Extended Calibration Cup*

Probe to Calibrate	Upright	Inverted
Conductivity	320ml	150ml
pH/ORP	240ml	175ml
ISE	240ml	175ml
All Optical Sensors	225ml	DO NOT CALIBRATE***

Table 2 6820V2-2 and 6920V2-2 Sondes with Extended Calibration Cup*

Probe to Calibrate	Upright	Inverted
Conductivity	310ml	150ml
pH/ORP	200ml	150ml
ISE	200ml	150ml
All Optical Sensors	225 ml	DO NOT CALIBRATE***

Table 3 600XL and 600XLM Sondes

Probe to Calibrate	Upright	Inverted
Conductivity	50ml	50ml
pH/ORP	25ml	50ml

Table 4 6600V2-2 Sonde with Short Calibration Cup and Long Cup in Parentheses*

Probe to Calibrate	Upright	Inverted
Conductivity	425ml (650ml)	250ml (250ml)
pH/ORP	300ml (500ml)	250ml (250ml))
ISE	300ml (500ml)	250ml (250ml)
All Optical Sensors	180ml (500ml)	DO NOT CALIBRATE***

Table 5 6600EDSV2-2 Sonde with Short Calibration Cup and Long Cup in Parentheses*

Probe to Calibrate	Upright	Inverted
Conductivity	275ml (520ml)	350ml (350ml)
pH/ORP	175ml (400ml)	350ml (350ml)
All Optical Sensors	225ml (420ml)	DO NOT CALIBRATE***

Table 6 6600V2-4 Sonde with Standard Long Calibration Cup****

Probe to Calibrate	Upright	Inverted
Conductivity	525ml	150ml
pH/ORP	500ml	150ml
All Optical Sensors	425ml	DO NOT CALIBRATE***

Table 7 600 OMS V2-1 Sonde* *

Probe to Calibrate	Upright	Inverted
Conductivity	375ml	N/A
Turbidity, Chlorophyll, Rhodamine WT	350ml	N/A

Table 8 600R and 600QS Sondes

Probe to Calibrate	Upright	Inverted
Conductivity	350ml	N/A
pH/ORP	120ml	N/A

* See section below for special instructions dealing with calibration of 6136 turbidity sensor.

** See section below for special instructions dealing with calibration of the conductivity sensor for the 600 OMS V2-1.

*** Optical Sensors CANNOT be calibrated with the sonde in the Upside-Down position because of interference from the meniscus of the calibration standard.

**** An extended length calibration cup is supplied with the 6600V2-4, 6600V2-2, and 6600EDSV2-2 to facilitate calibration of the 6136 turbidity sensor. This cup requires the use of larger volumes of other calibration solutions. Users may choose to purchase the shorter calibration cup sleeve for calibration of sensors other than the 6136 to reduce the volumes of calibrant. The shorter cal cup sleeve is YSI Item Number 066267 and can be obtained by contacting YSI Technical Support.

CALIBRATION OF THE 6136 TURBIDITY SENSOR

The 6136 can be calibrated using either the calibration cup supplied with the sonde or with an extended length calibration cup which can be purchased as an option for the 6820V2-1 and 6920V2-1. An extended cup is supplied as a standard item with the 6820V2-2, 6920V2-2, 6600V2-4, 6600V2-2, and 6600EDSV2-2 sondes. If you choose to calibrate with the short calibration cup, you also MUST first make certain that the vessel is equipped with a BLACK bottom. In addition, you should engage only ONE THREAD when screwing the calibration cup onto the sonde in order to keep the turbidity probe face as far as possible from the calibration cup bottom to avoid interference. Even with these techniques, there will still be a small interference from the bottom of the calibration cup that will cause your field turbidity readings to be approximately 0.5 NTU lower than the actual reading. This small error is usually only evident when the sonde is deployed in very clear water where the readings might appear as slightly negative values, e.g., a turbidity of 0.1 NTU would appear as –0.4 NTU.

Use of the extended length cup will require the use of significantly more standard solutions for 6820V2-1/ 6920V2-1 sondes (additional 180 mL) if calibration is done in the upright position. To minimize calibration solution volumes for sensors other than turbidity, users may wish to purchase the shorter calibration cup sleeve which is supplied as standard with the 6820V2-1 and 6920V2-1. The shorter cal cup sleeve for any 6600 is Item Number 066267, and the shorter cal cup sleeve for any 6820/6920 is Item Number 069286. These can be ordered from YSI Technical Support.

NOTE CAREFULLY: All optical sensors MUST be calibrated in the upright position no matter which type of calibration cup is employed. In the upside-down position, the meniscus of the standard causes a great deal of interference and this interference is likely to result in calibration errors and/or erroneous field readings.

CALIBRATION OF 600 OMS V2-1 CONDUCTIVITY SENSOR

In order to conserve calibration solution, the 600 OMS V2-1conductivity sensor should be calibrated with the optical probe removed and the optical port plug securely tightened. The volume of conductivity solution provided in Table 7 above reflects this special condition. In addition, it is recommended that the sonde be shaken vigorously after immersion in the conductivity reagent to assure that bubbles are expelled from the cell.

An instruction sheet dealing in greater detail with the special requirements for calibration of 600 OMS V2-1sensors is included with the sonde. Be sure to read the instructions carefully before using the sonde.

2.6.2 CALIBRATION PROCEDURES

The following calibration procedures are the most commonly used methods for the 6-series sensors. For detailed information on all calibration procedures, refer to **Section 2.9.2, Calibrate**.

To ensure more accurate results, you can rinse the calibration cup with water, and then rinse with a small amount of the calibration solution for the sensor that you are going to calibrate. Discard the rinse solution and add fresh calibrator solution. Use tables 1-8 to find the correct amount of calibrator solution.

1. Carefully immerse the probes into the solution and rotate the calibration cup to engage several threads. YSI recommends supporting the sonde with a ring stand and clamp to prevent the sonde from falling over.

2. With the proper cable, connect the sonde to a PC, access EcoWatch for Windows and proceed to the Main menu (for information on how to run EcoWatch for Windows software, see **Section 2.4.2, Running EcoWatch Software)**. From the sonde Main menu, select **2-Calibrate**.

```
---------------Calibrate--------------
1-Conductivity      6-ISE3 NH4+
2-Dissolved Oxy     7-ISE4 NO3-
3-Pressure-Abs      8-Optic T-Turbidity-6026
4-ISE1 pH           9-Optic C-Chlorophyll
5-ISE2 ORP

Select option (0 for previous menu):
```

3. Note that the exact appearance of this menu will vary depending upon the sensors that are available and enabled on your sonde. To select any of the parameters from the Calibrate menu, input the number that is next to the parameter. Once you have chosen a parameter, some of the parameters will have a number that appears in parentheses. These are the default values and will be used during calibration if you press **Enter** without inputting another value. Be sure not to accept default values unless you have assured that they are correct. If no default value appears, you must type a numerical value and press **Enter**.

4. After you input the calibration value, or accept the default, press **Enter**. A real-time display will appear on the screen. Carefully observe the stabilization of the readings of the parameter that is being calibrated. When the readings have been stable for approximately 30 seconds, press **Enter** to accept the calibration. The calibrated value is bolded on the example screen on the following page.

5. Press **Enter** to return to the Calibrate menu, and proceed to the next calibration.

CALIBRATION EXAMPLE

The example below for calibration of specific conductance, is designed to demonstrate the general calibration protocol for all parameters. From the Calibrate menu, press **1-Conductivity** and the following display will be shown.

```
------------Cond calibration-----------
1-SpCond
2-Cond
3-Salinity

Select option (0 for previous menu): 1
```

Select **1-SpCond** (the generally-recommended method for calibration of a conductivity sensor) and the following prompt will appear which calls for your numerical input of the specific conductance of your calibration solution.

```
Enter SpCond in mS/cm (10):
```

As noted above, the number in parentheses is the default value of this parameter and will be used in the calibration if *only* **Enter** is pressed without typing in another value. Similar prompts will be displayed during the calibration of all parameters, but for some sensors, such as pH, no default values are provided. In these cases, the user must input a numerical value and then press **Enter**.

After the correct calibration value for your solution is input and **Enter** is pressed, a real-time display similar to the following will then appear on the screen..

```
Date     Time     Temp SpCond   Cond   Sal DOsat     DO    Depth   pH   Battery
mm/dd/yy hh:mm:ss   C  mS/cm    mS/cm  ppt     %    mg/L    feet         volts
-------------------------------------------------------------------------------
To calibrate, press <Enter> when the readings are stable.

05/05/97 08:39:51 20.83 9.602 8.837   5.41  37.9   3.28  -0.252  7.06    10.2
```

Note that all parameters that have been enabled will appear - not just the one being calibrated at the moment. The user should carefully observe the stabilization of the readings of the parameter that is being calibrated and, when the readings are stable for approximately 30 seconds, press **Enter** to implement the calibration and the following message will appear.

```
Calibrated.  Press <Enter> to continue.
```

NOTE: If an ERROR message appears, begin the calibration procedure again. Be certain that the value you enter for the calibration standard is correct. Also see **Section 6, Troubleshooting** for more information on error messages.

CAUTION: Be certain to **immerse the entire sonde** in solution standards for calibration of all parameters. Most calibrations require readings not only from the sensor being calibrated but also from the temperature sensor.

Specific start-up calibration procedures for all sensors that commonly require calibration are provided in the following paragraphs of this section. Remember that these are basic protocols designed to get the user up and running with your 6-series sonde. A more-detailed discussion of sensor calibration can be found in Section 2.9.2.

CONDUCTIVITY

This procedure calibrates conductivity, specific conductance, salinity, and total dissolved solids.

Place the correct amount (see Tables 1-8) of 10 mS/cm conductivity standard (YSI 3163 is recommended) into a clean, dry or pre-rinsed calibration cup.

Before proceeding, ensure that the sensor is as dry as possible. Ideally, rinse the conductivity sensor with a small amount of standard that can be discarded. Be certain that you avoid cross-contamination of standard solutions with other solutions. Make certain that there are no salt deposits around the oxygen and pH/ORP probes, particularly if you are employing standards of low conductivity.

Carefully immerse the probe end of the sonde into the solution. Gently rotate and/or move the sonde up and down to remove any bubbles from the conductivity cell. The probe must be completely immersed past its vent hole. Using the recommended volumes from the table in the previous subsection should insure that the vent hole is covered.

Allow at least one minute for temperature equilibration before proceeding.

From the Calibrate menu, select **Conductivity** to access the Conductivity calibration procedure and then **1-SpCond** to access the specific conductance calibration procedure. Enter the calibration value of the standard you are using (mS/cm at 25°C) and press **Enter**. The current values of all enabled sensors will appear on the screen and will change with time as they stabilize.

Observe the readings under Specific Conductance or Conductivity and when they show no significant change for approximately 30 seconds, press **Enter**. The screen will indicate that the calibration has been accepted and prompt you to press **Enter** again to return to the Calibrate menu.

Rinse the sonde in tap or purified water and dry the sonde.

NOTE: The YSI conductivity system is very linear over its entire 0-100 mS/cm range. Therefore, it is usually not necessary to use calibration solutions other than the 10 mS/cm reagent recommended above for all environmental applications from low conductivity freshwater to seawater. YSI does offer the 3161 (1 mS/cm) and 3165 (100 mS/cm) conductivity standards for users who want to assure maximum accuracy at the high and low ends of the sensor range. Users of the 1 mS/cm standard should be particularly careful to avoid contamination of the reagent. In fact, because of contamination issues, YSI does not recommend using standards less than 1 mS/cm.

NOTE: For calibration of the 600 OMS V2-1conductivity sensor, the optical probe must be removed and the port plugged. See specific instructions in the application note supplied with the 600 OMS V2-1.

RAPID PULSE POLAROGRAPHIC DISSOLVED OXYGEN

Place approximately 3 mm (1/8 inch) of water in the bottom of the calibration cup. Place the probe end of the sonde into the cup. Make certain that the DO and temperature probes are not immersed in the water. Engage only 1 or 2 threads of the calibration cup to insure the DO probe is vented to the atmosphere. Wait approximately 10 minutes for the air in the calibration cup to become water saturated and for the temperature to equilibrate.

Two calibration protocols are provided below for Rapid Pulse dissolved oxygen, one for sampling applications and one for long-term monitoring applications.

Sampling Applications

If your instrument will be used in sampling applications where the dissolved oxygen is "on" continuously during the study, deactivate "Autosleep RS232" as described in **Section 2.5, Sonde Software Setup**.

From the Calibrate menu, select **Dissolved Oxy**, then **1-DO %** to access the DO percent calibration procedure. Calibration of dissolved oxygen in the DO % procedure also results in calibration of the DO mg/L mode and vice versa.

Enter the current barometric pressure in mm of Hg. (Inches of Hg x 25.4 = mm Hg).

Note: Laboratory barometer readings are usually "true" (uncorrected) values of air pressure and can be used "as is" for oxygen calibration. Weather service readings are usually not "true", i.e., they are corrected to sea level, and therefore cannot be used until they are "uncorrected". An approximate formula for this "uncorrection" (where the BP readings MUST be in mm Hg) is:

True BP = [Corrected BP] – [2.5 * (Local Altitude in feet above sea level/100)]

Press **Enter** and the current values of all enabled sensors will appear on the screen and change with time as they stabilize. Observe the readings under DO%. When they show no significant change for approximately 30 seconds, press **Enter**. The screen will indicate that the calibration has been accepted and prompt you to press **Enter** again to return to the Calibrate menu.

Rinse the sonde in water and dry the sonde.

Monitoring Applications

If your instrument will be used in monitoring applications where data is being captured at a longer interval (e.g. 15 – 60 minutes) to internal sonde memory, a data collection platform or a computer, you need to activate "Autosleep RS232" as described in **Section 2.5, Sonde Software Setup**. Then follow the instructions detailed above for the Sampling Application calibration. With Autosleep active, the calibration will occur automatically with a display similar to that shown below.

```
=================================================================
 Temp SpCond    Sal DOsat     DO   Depth    pH NH4+ N NO3- N Turbid
    C  mS/cm    ppt     %   mg/L    feet         mg/L   mg/L    NTU
-----------------------------------------------------------------
Stabilizing: 38
```

After the warm-up time is complete, the readings just before and just after calibration are displayed. When you press **Enter**, the screen returns to the DO Calibration menu.

ROX OPTICAL DISSOLVED OXYGEN

Place the sensor either (a) into a calibration cup containing about 1/8 inch of water which is vented by loosening the threads or (b) into a container of water which is being continuously sparged with an aquarium pump and air stone. Wait approximately 10 minutes before proceeding to allow the temperature and oxygen pressure to equilibrate.

Select **ODOsat %** and then **1-Point** to access the DO calibration procedure. Calibration of your Optical dissolved oxygen sensor in the DO % procedure also results in calibration of the DO mg/L mode and vice versa.

Enter the current barometric pressure in **mm of Hg.** (Inches of Hg x 25.4 = mm Hg).

Note: Laboratory barometer readings are usually "true" (uncorrected) values of air pressure and can be used "as is" for oxygen calibration. Weather service readings are usually not "true", i.e., they are corrected to sea level, and therefore cannot be used until they are "uncorrected". An approximate formula for this "uncorrection" (where the BP readings MUST be in mm Hg) is:

True BP = [Corrected BP] – [2.5 * (Local Altitude in ft above sea level/100)]

Press **Enter** and the current values of all enabled sensors will appear on the screen and change with time as they stabilize. Observe the readings under ODOsat %. When they show no significant change for approximately 30 seconds, press **Enter**. The screen will indicate that the calibration has been accepted and prompt you to press **Enter** again to return to the **Calibrate** menu.

The minor advantages and disadvantages of calibration in air-saturated water versus water-saturated air are outlined in **Appendix M, ROX Optical DO Sensor**

NOTE CAREFULLY: As opposed to the 6562 Rapid Pulse Polarographic DO sensor described above, there is no difference between the calibration routine for sensors which will be used for sampling or monitoring applications. Usually the Autosleep RS-232 feature in the **Advanced|Setup** menu will be activated for ROX calibrations, but there is no problem if it is not active.

Rinse the sonde in water and dry the sonde.

DEPTH AND LEVEL

For the depth and level calibration, make certain that the depth sensor module is in air and not immersed in any solution.

From the Calibrate menu, select **Pressure-Abs** (or **Pressure-Gage** if you have a vented level sensor) to access the depth calibration procedure. Input 0.00 or some known sensor offset in feet. Press **Enter** and monitor the stabilization of the depth readings with time. When no significant change occurs for approximately 30 seconds, press **Enter** to confirm the calibration. This zeros the sensor with regard to current barometric pressure. Then press **Enter** again to return to the Calibrate menu.

For best performance of depth measurements, users should ensure that the sonde‟s orientation remains constant while taking readings. This is especially important for vented level measurements and for sondes with side mounted pressure sensors.

pH 2-POINT

Using the correct amount of pH 7 buffer standard (see Tables 1-8) in a clean, dry or pre-rinsed calibration cup, carefully immerse the probe end of the sonde into the solution. Allow at least 1 minute for temperature equilibration before proceeding.

From the Calibrate menu, select **ISE1 pH** to access the pH calibration choices and then press **2- 2-Point**. Press **Enter** and input the value of the buffer at the prompt.

NOTE: The actual pH value of all buffers is somewhat variable with temperature and that the correct value from the bottle label for your calibration temperature should be entered for maximum accuracy. For example, the pH of YSI "pH 7 Buffer" is 7.00 at 25 C, but 7.02 at 20 C.

After entering the correct pH value of the buffer, press **Enter** and the current values of all enabled sensors will appear on the screen and change with time as they stabilize in the solution. Observe the readings under pH and when they show no significant change for approximately 30 seconds, press **Enter**. The display will indicate that the calibration is accepted.

After the pH 7 calibration is complete, press **Enter** again, as instructed on the screen, to continue. Rinse the sonde in water and dry the sonde before proceeding to the next step.

Using the correct amount (see Tables 1-8) of an additional pH buffer standard into a clean, dry or pre-rinsed calibration cup, carefully immerse the probe end of the sonde into the solution. Allow at least 1 minute for temperature equilibration before proceeding.

Press **Enter** and input the correct value of the second buffer for your calibration temperature at the prompt. Press **Enter** and the current values of all enabled sensors will appear on the screen and will change with time as they stabilize in the solution. Observe the readings under pH and when they show no significant change for approximately 30 seconds, press **Enter**. After the second calibration point is complete, press **Enter** again, as instructed on the screen, to return to the Calibrate menu.

Rinse the sonde in water and dry. Thoroughly rinse and dry the calibration containers for future use.

NOTE: The majority of environmental water of all types has a pH between 7 and 10. Therefore, unless you anticipate a pH of less than 7 for your application, YSI recommends a two point calibration using pH 7 and pH 10 buffers.

The next calibration instructions are only for the ISE sensors which are options for the 6820V2-1, 6800V2-2, 6600V2-2, 6920V2-1, and 6920V2-2 sondes. If you do not have one of these sondes, you may skip to the next section.

AMMONIUM (NH_4^+) , CHLORIDE CL^- AND NITRATE (NO_3^-) 3-POINT

WARNING: AMMONIUM AND NITRATE SENSORS CAN ONLY BE USED AT DEPTHS OF LESS THAN 50 FEET (15 METERS). USE OF THE SENSORS AT GREATER DEPTHS IS LIKELY TO PERMANENTLY DAMAGE THE SENSOR MEMBRANE.

The calibration procedures for ammonium, nitrate or chloride are similar to pH except for the reagents in the calibration solutions. Suggested values for calibrants are 1 and 100 mg/L of either ammonium-nitrogen (NH_4-N) or nitrate-nitrogen (NO_3-N). Suggested values for calibrants are 10 and 1000 mg/L of Chloride (Cl^-).

NOTE: The following procedure requires one portion of the high concentration calibrant and two portions of the low concentration calibrant. The high concentration solution and one of the low concentration solutions should be at ambient temperature. The other low concentration solution should be chilled to less than 10°C prior to beginning the procedure.

Place the proper amount of 100 mg/L standard (1000mg/l for chloride) into a clean, dry or pre-rinsed transport cup. Carefully immerse the probe end of the sonde into the solution. Allow at least 1 minute for temperature equilibration before proceeding.

Select **Ammonium, Nitrate,** or **Chloride** to access the appropriate calibration choices. Then select **3-3-Point**. Press **Enter** and input the concentration value of the standard as requested. Press **Enter** and the current values of all enabled sensors will appear on the screen and will change with time as they stabilize in the solution. Observe the readings under $NH4^+$, $NO3^-$, or Cl^- . When they show no significant change for approximately 30 seconds, press **Enter**.

After the first calibration point is complete, proceed as instructed on the screen, to continue. Rinse the sonde in water and dry the sonde prior to the next step.

Place the proper amount of 1 mg/L standard for Ammonium or Nitrate (10 mg/l for Chloride) into a clean, dry or pre-rinsed transport cup. Carefully immerse the probe end of the sonde into the solution. Allow at least 1 minute for temperature equilibration before proceeding.

Press **Enter** and input the concentration value of the standard as requested.

Press **Enter** and the current values of all enabled sensors will appear on the screen and will change with time as they stabilize in the solution. Observe the readings under $NH4^+$, $NO3^-$, or Cl^-.and when they have show no significant change for approximately 30 seconds, press **Enter**.

After the second value calibration is complete, press **Enter** to continue. Place the proper amount of chilled 1 mg/L standard (10 mg/L for the chloride) into a clean, dry or pre-rinsed calibration cup. Carefully immerse the probe end of the sonde into the solution. Allow at least 5 minutes for temperature equilibration before proceeding.

Press **Enter** and input the concentration value of the standard as requested. Press **Enter** and the current values of all enabled sensors will appear on the screen and will change with time as they stabilize in the solution. Observe the readings under $NH4^+$, $NO3^{-.}$ or $Cl^{-.}$ and when they show no significant change for approximately 30 seconds, press **Enter**. After the third value calibration is complete, press **Enter** to return to the Calibrate menu.

Thoroughly rinse and dry the calibration cups for future use.

CALIBRATION TIP: Exposure to the high ionic content of pH buffers can cause a significant, but temporary, drift in these ISE probes (ammonium, nitrate and chloride probes). Therefore, when calibrating the pH probe, YSI recommends that you use one of the following methods to minimize errors in the subsequent readings:

- Calibrate pH first, immersing all of the probes in the pH buffers. After calibrating pH, place the probes in 100 mg/L nitrate or ammonium standard or 1000 mg/L chloride standard and monitor the reading. Usually, the reading starts low and may take as long as 30 minutes to reach a stable value. When it does, proceed with the calibration.

- When calibrating pH, remove ISE modules from the sonde bulkhead and plug the ports. After pH calibration is complete, replace the ISE sensors and proceed with their calibration with no stabilization delay.

TURBIDITY 2-POINT

Select **Optic X –Turbidity-6136** or **Optic X – Turbidity 6026** from the Calibrate Menu and then **2-2-Point**.

NOTE: Before calibrating your 6136 turbidity sensor, pay particular attention to the following cautions:

- To properly calibrate YSI turbidity sensors, you MUST use standards that have been prepared according to details in *Standard Methods for the Treatment of Water and Wastewater (Section 2130 B)*. Acceptable standards include (a) formazin prepared according to *Standard Methods*; (b) dilutions of 4000 NTU formazin concentrate purchased from Hach; (c) Hach StablCal™ standards in various NTU denominations; and (d) AMCO-AEPA standards prepared specifically for the 6026 and 6136 by either YSI or approved vendors who are listed on the YSI website (www.ysi.com). STANDARDS FROM OTHER VENDORS ARE **NOT** APPROVED FOR THE YSI TURBIDITY SYSTEM AND THEIR USE WILL LIKELY RESULT IN BOTH CALIBRATION ERRORS AND INCORRECT FIELD READINGS.

- For AMCO-AEPA standards, the value entered by the user during the calibration protocol is DIFFERENT depending on which YSI turbidity sensor (Legacy 6026 or Current 6136) is being calibrated. This reflects the empirically determined fact that 6026 and 6136 sensors that have been calibrated to the same value in the primary standard formazin, will have different responses in suspensions of the AEPA-AMCO beads. This effect is likely due to the larger optical cell volume of the 6136. Thus, for example, the label of the YSI 6073 turbidity standard bottle indicates that the value of the standard is **100 NTU when used for calibration of the 6026 sensor, but 126 NTU when used to calibrate the 6136.** Note that the phenomenon of a sensor-specific formazin/AEPA-AMCO ratio is well known for sensors other than the 6026 and 6136.

- When calibrating a 6136 turbidity sensor you MUST carefully follow the instructions found above in Section 2.6.1 to avoid interference from the bottom of the calibration cup. Failure to carry out the calibration properly can result in inaccurate readings, particularly water of very low turbidity.

- Before proceeding with the calibration, be certain that the probe compartment of the sonde has been cleaned and is free of debris. Solid particles from this source, particularly those carried over from past deployments, will contaminate the standards during your calibration protocol and cause either calibration errors and/or inaccurate field data.

- One standard must be 0 NTU, and this standard must be calibrated first.

To begin the calibration, place the correct amount (see Tables 1-8 above) of 0 NTU standard (clear deionized or distilled water) into the calibration cup provided with your sonde. Immerse the sonde in the

water**.** Input the value 0 NTU at the prompt, and press **Enter**. The screen will display real-time readings that will allow you to determine when the readings have stabilized. Activate the wiper 1-2 times by pressing **3-Clean Optics** as shown on the screen, to remove any bubbles. After stabilization is complete, press **Enter** to "confirm" the first calibration and then, as instructed, press **Enter** to continue.

Dry the sonde carefully and then place the sonde in the second turbidity standard (100 or 126 NTU is suggested) using the same container as for the 0 NTU standard. Input the correct turbidity value in NTU, press **Enter**, and view the stabilization of the values on the screen in real-time. As above, activate the wiper with the "3" key or manually rotate the sonde to remove bubbles. After the readings have stabilized, press **Enter** to confirm the calibration and then press **Enter** to return to the Calibrate menu.

Thoroughly rinse and dry the calibration cups for future use. For additional information related to calibrating the turbidity sensor, see **Appendix E, Turbidity Measurements**.

CHLOROPHYLL 1-POINT

Select **Optic X -Chlorophyll** from the **Calibrate** Menu, **Chl µg/L** and then **1-1 point.**

NOTE: This procedure will zero your fluorescence sensor and use the default sensitivity for calculation of chlorophyll concentration in µg/L, allowing quick and easy fluorescence measurements that are only semi-quantitative with regard to chlorophyll. However, the readings will reflect changes in chlorophyll from site to site, or over time at a single site.

To increase the accuracy of your chlorophyll measurements, follow the 2-point or 3-point calibration protocols outlined in **Section 2.9, Sonde Menu**.

Before making any field readings, carefully read **Section 5.14**, **Chlorophyll a**nd **Appendix I, Chlorophyll Measurements** that describe practical aspects of fluorescence measurements.

To begin the calibration, place the correct amount (see Tables 1-8 above) of clear deionized or distilled water into the YSI clear calibration cup provided. Immerse the sonde in the water**.** Input the value 0 µg/L at the prompt, and press **Enter**. The screen will display real-time readings that will allow you to determine when the readings have stabilized. Activate the wiper 1-2 times by pressing **3-Clean Optics** as shown on the screen to remove any bubbles from the sensor. After stabilization is complete, press **Enter** to "confirm" the calibration and then, as instructed, press **Enter** to return to the Calibrate menu.

Thoroughly rinse and dry the calibration cups for future use. For additional information related to calibrating the chlorophyll sensor, see **Section 5.14**, **Chlorophyll** and **Appendix I, Chlorophyll Measurements.**

BGA-PC 1-POINT

Select **Optic X BGA-PC -** from the **Calibrate** Menu, and then **1-1 point.**

NOTE: This procedure will zero your fluorescence sensor and use the default sensitivity for calculation of phycocyanin-containing BGA in cells/mL, allowing quick and easy fluorescence measurements that are only semi-quantitative with regard to BGA-PC. However, the readings will reflect changes in BGA-PC from site to site, or over time at a single site.

To increase the accuracy of your BGA-PC measurements, follow the 2-point calibration protocols outlined in **Section 2.9, Sonde Menu**.

Before making any field readings, carefully read **Section 5.16, Principles of Operation** to better understand the practical aspects of BGA-PC fluorescence measurements.

To begin the calibration, place the correct amount (see Tables 1-8 above) of clear deionized or distilled water into the YSI clear calibration cup provided. Immerse the sonde in the water**.** Input the value 0 cells/mL at the prompt, and press **Enter**. The screen will display real-time readings that will allow you to determine when the readings have stabilized. Activate the wiper 1-2 times by pressing **3-Clean Optics** as shown on the screen to remove any bubbles from the sensor. After stabilization is complete, press **Enter** to "confirm" the calibration and then, as instructed, press **Enter** to return to the Calibrate menu. Note that because the range of the BGA sensors in cells/mL is large, the readings may appear to be somewhat noisier during the calibration procedure than for other 6-series sensors. Variations of +/- 400 cells/mL for the zero point can be observed with a properly functioning sensor since this value is only 0.2% of the range.

Thoroughly rinse and dry the calibration cups for future use. For additional information related to calibrating the BGA-PC sensor, see **Section 5.16, Principles of Operation.**

Note that the 1-point calibration of the BGA-PC sensor in cells/mL will also zero the PC RFU (Relative Fluorescence Units) parameter which is in units of percent of the full scale of the sensor. Users may wish to activate PC RFU in the Report menu and simply use this parameter to determine BGA-PC events until a good correlation between the observed cells/mL value and the value determined from laboratory analysis has been established.

BGA-PE 1-POINT

Select **Optic X BGA-PE -** from the **Calibrate** Menu, and then **1-1 point.**

NOTE: This procedure will zero your fluorescence sensor and use the default sensitivity for calculation of phycoerythrin-containing BGA in cells/mL, allowing quick and easy fluorescence measurements that are only semi-quantitative with regard to BGA-PE. However, the readings will reflect changes in BGA-PE from site to site, or over time at a single site.

To increase the accuracy of your BGA-PE measurements, follow the 2-point calibration protocols outlined in **Section 2.9, Sonde Menu**.

Before making any field readings, carefully read **Section 5.17, Principles of Operation** to better understand the practical aspects of BGA-PE fluorescence measurements.

To begin the calibration, place the correct amount (see Tables 1-8 above) of clear deionized or distilled water into the YSI clear calibration cup provided. Immerse the sonde in the water**.** Input the value 0 cells/mL at the prompt, and press **Enter**. The screen will display real-time readings that will allow you to determine when the readings have stabilized. Activate the wiper 1-2 times by pressing **3-Clean Optics** as shown on the screen to remove any bubbles from the sensor. After stabilization is complete, press **Enter** to "confirm" the calibration and then, as instructed, press **Enter** to return to the Calibrate menu. Note that because the range of the BGA sensors in cells/mL is large, the readings may appear to be somewhat noisier during the calibration procedure than for other 6-series sensors. Variations of +/- 400 cells/mL for the zero point can be observed with a properly functioning sensor since this value is only 0.2% of the range.

Thoroughly rinse and dry the calibration cups for future use. For additional information related to calibrating the BGA-PE sensor, see **Section 5.17, Principles of Operation.**

Note that the 1-point calibration of the BGA-PE sensor in cells/mL will also zero the PE RFU (Relative Fluorescence Units) parameter which is in units of percent of the full scale of the sensor. Users may wish to activate PC RFU in the Report menu and simply use this parameter to determine BGA-PE events until a good correlation between the observed cells/mL value and the value determined from laboratory analysis has been established.

RHODAMINE WT 2-POINT

Select **Rhodamine** from the **Calibrate** Menu and then **2-2-Point**.

NOTE: One standard must be 0 ug/L in rhodamine WT, and this standard must be calibrated first.

To begin the calibration, place the correct amount (see Tables 1-8) of 0 standard (clear deionized or distilled water) into the calibration cup provided with your sonde and immerse the sonde in the water**.** Input the value 0 ug/L at the prompt, and press **Enter**. The screen will display real-time readings that will allow you to determine when the readings have stabilized. Activate the wiper 1-2 times by pressing **3-Clean Optics** as shown on the screen, to remove any bubbles. After stabilization is complete, press **Enter** to "confirm" the first calibration and then, as instructed, press **Enter** to continue.

Dry the sonde carefully and then place the sonde in the second rhodamine WT standard (100 ug/L is recommended) using the same container as for the 0 ug/L standard. Input the correct rhodamine WT concentration in ug/L, press **Enter**, and view the stabilization of the values on the screen in real-time. As above, activate the wiper with the "3" key or manually rotate the sonde to remove bubbles. After the readings have stabilized, press **Enter** to confirm the calibration and then press **Enter** to return to the Calibrate menu.

Thoroughly rinse and dry the calibration cups for future use.

2.7 TAKING READINGS

After you have (1) enabled the sensors, (2) set the report to show the parameters that you want to see, and (3) calibrated the sensors, you are now ready to take readings.

There are two basic approaches to sampling, discrete and unattended. Using discrete sampling, the sonde is connected via a communication cable to a PC or 650 MDS Display/Logger. The sampling frequency is likely to be rapid (seconds) in order to obtain a representative sampling as you move from site to site. Readings will probably be logged to several different files.

Unattended sampling is normally done with sondes that have internal batteries. The sampling frequency is likely to be longer (minutes or hours). A sonde is typically deployed for days or weeks at a time, and readings will be logged to a single file. The communication cable may be disconnected and internal battery power used to operate the sonde. Alternatively, the sonde may connect via SDI-12 communication to a data collection platform (DCP). Sondes without batteries need to be connected to an external power source for unattended sampling.

Select **1-Run** from the Main menu to begin taking readings or to set/verify the parameters required for a study. There are two options in the Run menu as shown below.

```
---------------Run setup---------------
1-Discrete sample   2-Unattended sample

Select option (0 for previous menu): 1
```

DISCRETE SAMPLING

Select **1-Discrete sample** from the Run menu. The Discrete sample menu will be displayed.

```
------------Discrete sample------------
1-Start sampling
2-Sample interval=4
3-File=
4-Site=
5-Open file

Select option (0 for previous menu):
```

Select **2-Sample Interval** to type a number that represents the number of <u>seconds</u> between samples. The maximum sample interval is 32767 seconds (9+ hours). The factory default sample interval is 4 seconds and works best for most discrete sampling applications. See Section 2.9.1 for more details.

Select **3-File** to enter a filename with a maximum of 8 characters. This is the file to which you will log readings.

If you started sampling without entering a filename, the default name NONAME1 will be assigned to your file. Whenever you press 1-LOG last sample or 2-LOG ON/OFF from the menu, NONAME1 will be opened during sampling. If this happens, and you want to restart the file with a different name, press **5-Close file** and rename the file.

Select **4-Site** to assign a site name with a maximum of 31 characters. This allows you to enter the name of the site where you are sampling.

When you select **5-Open File**, a file is opened and the number 5 changes to **Close File**. When you are finished logging data to the file, press **5-Close File** and number 5 changes back to **Open File**.

Now select **1-Start sampling** to start discrete sampling.

After the initial sampling time interval has passed, (e.g. 4 seconds in the example above), sequential lines of data will appear on the screen.

```
=============================================================
 Temp    Sal DOsat     DO   Depth    pH NH4+ N NO3- N Turbid
    C    ppt     %   mg/L    feet         mg/L   mg/L    NTU
-------------------------------------------------------------
*** 1-LOG last sample   2-LOG ON/OFF, 3-Clean optics ***
23.54   0.00  96.5   8.20   1.001  5.20  0.853  0.522    0.3
*** LOG is ON,  hit 2 to turn it OFF, 3-Clean optics ***
23.53   0.00  96.5   8.20   1.001  5.20  0.856  0.520    0.3
23.53   0.00  96.5   8.20   1.000  5.20  0.854  0.521    0.3
23.53   0.00  96.5   8.20   1.000  5.19  0.852  0.522    0.3
*** 1-LOG last sample   2-LOG ON/OFF, 3-Clean optics ***
23.53   0.00  96.5   8.20   1.000  5.19  0.852  0.522    0.3
Sample logged.
```

The following prompt will appear just below the screen header:
1-LOG last sample, 2-LOG ON/OFF, 3-Clean optics.

By entering **1–LOG last sample**, a single line of data can be logged to sonde memory and the following message will be displayed: **Sample logged.**

By entering **2-LOG ON/OFF**, a set of data can be logged to memory and the following message will be displayed: **LOG is ON, hit 2 to turn it OFF, 3-Clean optics.** Press **2** again to terminate logging.

By entering **3-Clean optics**, if your unit has an optical probe, the wiper will clean the optical surface**.** The **3-Clean optics** portion of the prompt will only appear if an optical probe was installed and enabled.

Select **Esc** or press **0** to exit discrete sampling.

UNATTENDED SAMPLING

Select **2-Unattended Sampling** from the Run menu. The Unattended sample menu will be displayed. Use the following example to understand the unattended sampling option.

> **Example:** You are going to deploy the sonde for 2 weeks, collecting a set of readings every 15 minutes. You start at 6:00 PM on July 17, 1996 and end the

sampling at 6:00 PM on July 31, 1996. The site is Clear Lake, near the spillway, and you want to log all of the readings to a single file CLRLAKE3.

```
------------Unattended setup-----------
1-Interval=00:15:00
2-Start date=07/17/96
3-Start time=18:00:00
4-Duration days=365
5-File=
6-Site=
7-Bat volts: 11.6
8-Bat life 25.1 days
9-Free mem 41.3 days
A-1st sample in 8.10 minutes
B-View params to log
C-Start logging
```

Follow the prompts on this screen to prepare your sonde for unattended deployment as described below:

To verify and/or correct the time and date enter **4-Status** or **5-System menu** from the Main menu. You may enter the correct date and time from either of these submenus.

- Select **1-Interval** and enter the desired time between samples (e.g. 15 minutes in the screen above). Use the 24-hour clock format to enter interval.

- Select **2-Start Date** and **3-Start Time** to set the time that data will begin to log to sonde memory. If you do not make any change to these entries, then the study will automatically begin at the next integral time interval, once you have pressed **C-Start logging**.

  Example: If the current time is 17:20:00 and your sample interval is 15 minutes, logging will automatically begin at 17:30:00.

It is better to start the study prior to taking the unit to the field so that you can confirm that readings are being saved to memory. If you should desire to start the instrument at the site at 6:00 PM as noted in the above example, change the Start Time to 18:00:00.

- Select **4-Duration** and set the length of the study in days. The default value is 365 days (which is longer than most deployments). In most cases, you will either want to stop the unattended study manually or allow the batteries to be expended. It is wise to set the duration to a value longer than the anticipated deployment. If you cannot retrieve the sonde at the expected time due to factors beyond your control such as weather or illness, data will continue to be acquired as long as battery power is present.

- Select **5-File** and enter a name of no more than 8 characters that will be used by your external computer to identify the study. Be sure to use ONLY alpha/numeric characters.

- Select **6-Site** and enter a site name of no more than 31 characters. This filename will appear in your sonde file directory, but will not be used to identify the file after transfer to your computer.

- Check **7-Battery** to make certain that the voltage is suitable for the length of the study that you are about to begin. No change can be made to this item via the software.

- Skip **B-View params to log** in this initial test study. This feature will be explained in detail in **Section 2.9, Sonde Menu**.

After making the above entries, the sonde software will automatically calculate the expected battery life, and the time it will take for the sonde memory to be filled. This information is displayed on the screen for your consideration as items 8, 9, and A. If the battery life or the free memory capacity will be exceeded sooner than the duration, you may want to make some changes to the entries. For example, you can free up memory in the sonde by uploading all existing data from the sonde memory to your PC and then deleting them out of the sonde (see 3-File from Main Menu). You may want to change the batteries for longer battery life. You can lengthen the sampling interval to extend both battery life and memory capacity.

Review the screen below, which now displays the entries made above and reflects your logging conditions.

```
------------Unattended setup-----------
1-Interval=00:15:00
2-Start date=07/17/96
3-Start time=18:00:00
4-Duration days=365
5-File=clrlake3
6-Site=Clear Lake at Spillway
7-Bat volts: 11.6
8-Bat life 25.1 days
9-Free mem 41.3 days
A-1st sample in 4.10 minutes
B-View params to log
C-Start logging
```

Once you press **C-Start logging**, a screen will appear to request confirmation.

```
-------------Start logging-------------
Are you sure?
1-Yes
2-No

Select option (0 for previous menu):
```

Select **1-Yes** and the screen will change.

```
----------------Logging----------------
1-Interval=00:15:00
2-Next at 07/17/96
3-Next at 18:00:00
4-Stop at 07/31/96
5-Stop at 18:00:00
6-File=clrlake3
7-Site=Clear Lake at Spillway
8-Bat volts: 11.7
9-Bat life 25.5 days
A-Free mem 41.3 days
B-Stop logging
C-Show Live Data

Select option (0 for previous menu):
```

The display now shows the next date and time for logging, and the stop date and time for the logging study. Most importantly, note that the "B" command now shows **B-Stop logging**, a confirmation that the logging has indeed been initiated.

The Unattended study will terminate when the duration you specified has expired or the batteries are expended. If you want to terminate sooner, simply select **2-Unattended** sample from the Run menu, then **B-Stop logging**. Select **1-yes** and return to the Unattended setup menu.

```
Stop logging?
1-Yes
2-No

Select option (0 for previous menu):
```

2.8 USING ECOWATCH TO CAPTURE, UPLOAD AND ANALYZE DATA

EcoWatch for Windows software is reporting and plotting software for use with the YSI 6-Series sondes. Instructions for installing this software were included in **Section 2.1, Getting Started**. This program can also be used to upload and view data logged to sonde memory during either discrete or unattended sampling.

CAPTURE

EcoWatch for Windows can be used to capture data in real-time to your PC"s hard drive or to a floppy disk. To utilize this function, interface the sonde to your PC via a COM port, run EcoWatch for Windows, and follow the step by step instructions below.

1. Click on the sonde icon , choose the proper Com port, and confirm.

2. From the **Main** sonde menu press **1-Run** and then **1-Discrete Sample**.

3. Make sure that the sample interval is set to the correct value. If it is not, change it to the correct value.

4. Close the terminal window by clicking on the **X** in the upper right hand corner. Do not close EcoWatch for Windows.

5. Open the **Real-Time** menu, click on **New** and select the location where you want to data transferred. Name the file, making sure that the name has extension **.RT**. The default location for the file is in the Data subdirectory of the ECOWWIN directory.

6. Click **OK**. After EcoWatch sets up the sonde for the study, data transfer will begin at the sample rate you selected. The data will be automatically plotted with autoscaling and saved as a .DAT file at your chosen selection.

7. To terminate the study, open the **Real-Time** menu, choose **Close**, and click **OK**.

UPLOAD DATA

If the sonde was deployed unattended (without a cable), clear debris and water from the bulkhead connector cap. Then remove the cap and connect the calibration cable (or field cable and adapter) from the sonde to your computer.

You may now retrieve data files using the following procedure. Remember these are files in the sonde directory, not files in the EcoWatch directory.

Run EcoWatch software on your PC and select the **Sonde** icon from the menu bar. A terminal interface window (like that shown below) will appear. If a "#" prompt appears instead of the Main sonde menu, type "menu" at the prompt to generate the display as shown. Then press **3-File** to view data handling options.

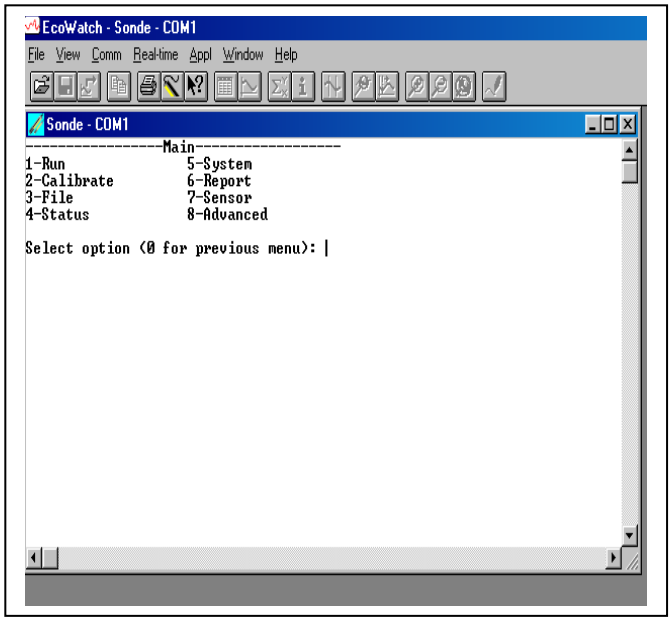


```
-----------------File-----------------
-
1-Directory          4-View file
2-Upload             5-Quick view file
3-Quick Upload       6-Delete all files

Select option (0 for previous menu): 1
```

Select **1-Directory** to view all files currently stored in the sondes flash disk memory, the screen below shows 6 files. All data files (.dat extension) could be uploaded to EcoWatch for viewing or plotting, but you do not need to upload all files in the directory. The file with the .glp extension contains the calibration record of the sonde. It is fully described in Sections 2.9.2 and 2.9.3 below. Details of any of the studies can be obtained by pressing the number key associated with the file in the Directory.

```
 Filename     Samples
1-BRIDGE1.dat       19
2-BRIDGE2.dat       27
3-UPLAKE.dat        33
4-CLRLAKE2.dat     167
5-DWNLAKE2.dat      31
6-00003001.glp       3

Select option (0 for previous menu): 4
```

```
-------------File details--------
------
1-View file
2-File:CLRLAKE2.dat
3-Samples:    167
4-Bytes:   4421
5-First:08/23/2001
6-First:08:33:40
7-Last :08/23/2001
8-Last :09:04:20
9-Interval:00:00:10
A-Site:Clear Lake
```

Select **2-Upload** to view file lists in memory, and upload the data to PC-based software.

Prior to upload, a "**Time window**" display appears that will allow you to select portions of the logged data to upload. You may select **1-Proceed** to upload all logged data from the dates and times displayed.

```
--------------Time window--------------
1-Proceed
2-Start date=08/14/96
3-Start time=18:00:00
4-Stop  date=08/28/96
5-Stop  time=11:00:00

Select option (0 for previous menu):
```

Select **1-Proceed**. Choose the appropriate file transfer protocol (in this example, PC6000) and a status box will show the progress of the upload. Verification of a successful transfer is indicated when all of the requested data have been transferred to the C:\ECOWIN\DATA subdirectory of your PC and automatically assigned a ".DAT" extension.

```
---------------File type---------------
1-PC6000
2-Comma & ' ' Delimited
3-ASCII Text

Select option (0 for previous menu):
```

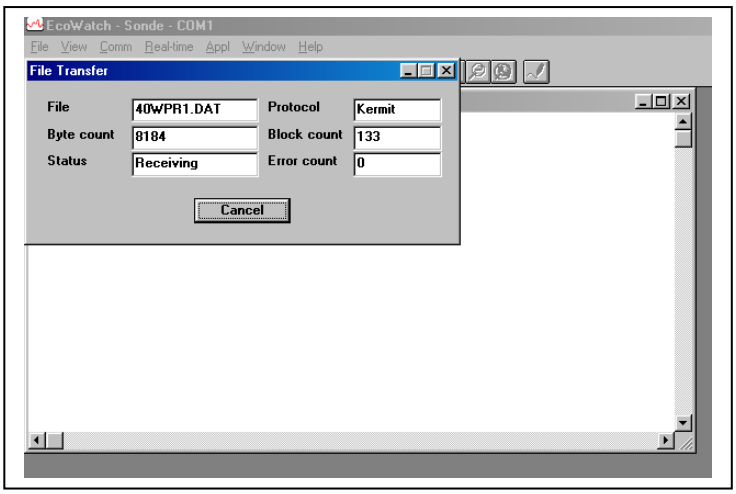

Select **3-Quick Upload** to transfer the last logged file in its entirety to your computer. As noted above, the file will then be resident in the C:\ECOWIN\DATA subdirectory.

Select **4-View File** to examine the data in any file currently stored in the sondes flash disk memory. You will first view the same screen as viewed in the Directory menu. From this menu choose the file of interest, then, using the Time window menu, choose the dates and/or times of interest. If you choose dates or times that are not within the designated start and stop times, no data will be displayed.

You also may choose the entire file. You can use the **Space Bar** to stop and restart the scrolling at any time. Use the **Esc** key to stop the view.

Select **5-Quick view file** to view the last page of data from the last data file in flash disk memory. This feature is particularly useful to quickly review any recently acquired data so that system performance can be assessed.

Select **6-Delete** all files to ***IRREVERSIBLY*** remove all files (INCLUDING the .glp file that contains calibration information) from the sonde flash disk memory. It is critical not to use this option until all relevant data from sonde memory is transferred to your computer via one of the upload options. There is a verification screen that appears, so that pressing the number 6-key does not immediately delete all files.

NOTE: By choosing the Delete function **only** .dat and .glp files will be erased. Calibration data for all sensors installed and calibrated on the sonde will not be deleted.

REPORTING AND PLOTTING DATA WITH ECOWATCH

There are many features in EcoWatch related to viewing, plotting, manipulating and reporting data collected from a 6-Series sonde. EcoWatch includes a Windows Help section for convenient reference that describes all of the software"s features. This section of the manual describes the most commonly used functions of the program and Section 4, **EcoWatch for Windows**, is a detailed manual for EcoWatch software.

For the purposes of describing and demonstrating EcoWatch plotting, reporting and data manipulation capabilities, we use the file SAMPLE.DAT available on the compact disk that was enclosed with your 6-series sonde. This file will be copied to your hard drive during EcoWatch installation and should be available to you for the instructions below.

When you are ready to move beyond the example SAMPLE.DAT file and analyze data collected from the sonde, locate and open the appropriate .DAT file from your data upload exercise. These data are normally found at C:\ECOWWIN\DATA\. An example filename is 1097CM01.DAT.

NOTE: In the instructions below that refer to clicking the mouse button, we always refer to the <u>left</u> mouse button unless otherwise specified.

OPENING A DATA FILE

If EcoWatch is not running, open the program by double clicking on the EcoWatch icon. Click on **File** to view a drop-down menu similar to the one shown in Figure 41. From this menu click on **Open**, then locate the drive and directory where SAMPLE.DAT (or your file of interest) resides. Alternatively, if you have been using EcoWatch during setup and checkout, you may be able to click on the file of your choice in the most recently opened files.

Once the SAMPLE.DAT file is open you should see a plot, Figure 41, which graphically represents seven days of sonde data for six different water quality parameters plotted as a function of date and time. Each set of data is autoscaled to allow you to see the minimum and maximum values for each parameter during the one-week study.

Figure 41 Opening a File

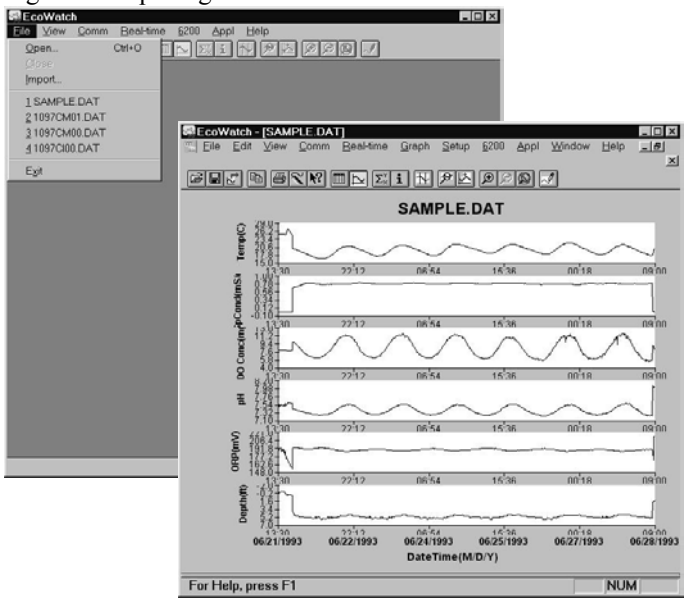

Some daily variations may be noticed in parameters such as dissolved oxygen, pH and temperature in this particular study. This is fairly typical in many natural bodies of water. Note also that conductivity is low at both ends of the graph. You may notice similar perturbations in some of the other readings as well. In this example, the sonde was not in the water for a short time at the beginning and end of the study. Not only can you see exactly when the sonde went in and out of the water, but the bottom graph shows the depth at which the sonde was deployed.

Notice also that you now see a new set of menu items in the top line. Some of these functions are specifically related to viewing and manipulating data. Next we will examine some of the viewing options.

VIEWING DATA

To look at some of the viewing options, click on **View** (Figure 42). Note that the Toolbar and Status Bar are turned on (check mark). In addition, the 4-Digit Year expression is checked. Also note that a check mark is just left of the Graph choice. When a check is next to Graph, all data are expressed graphically in the opening window.

To show data in both graphical and data table format, highlight the Table menu item, then click or press **Enter**. The graphical portion of the window becomes compressed, and the data table becomes visible. If you then click on **View** again, both the Graph and Table items have check marks to their left, indicating that both functions are turned on. You may use your mouse to scroll up/down and left/right to view data.

Figure 42 Viewing Options

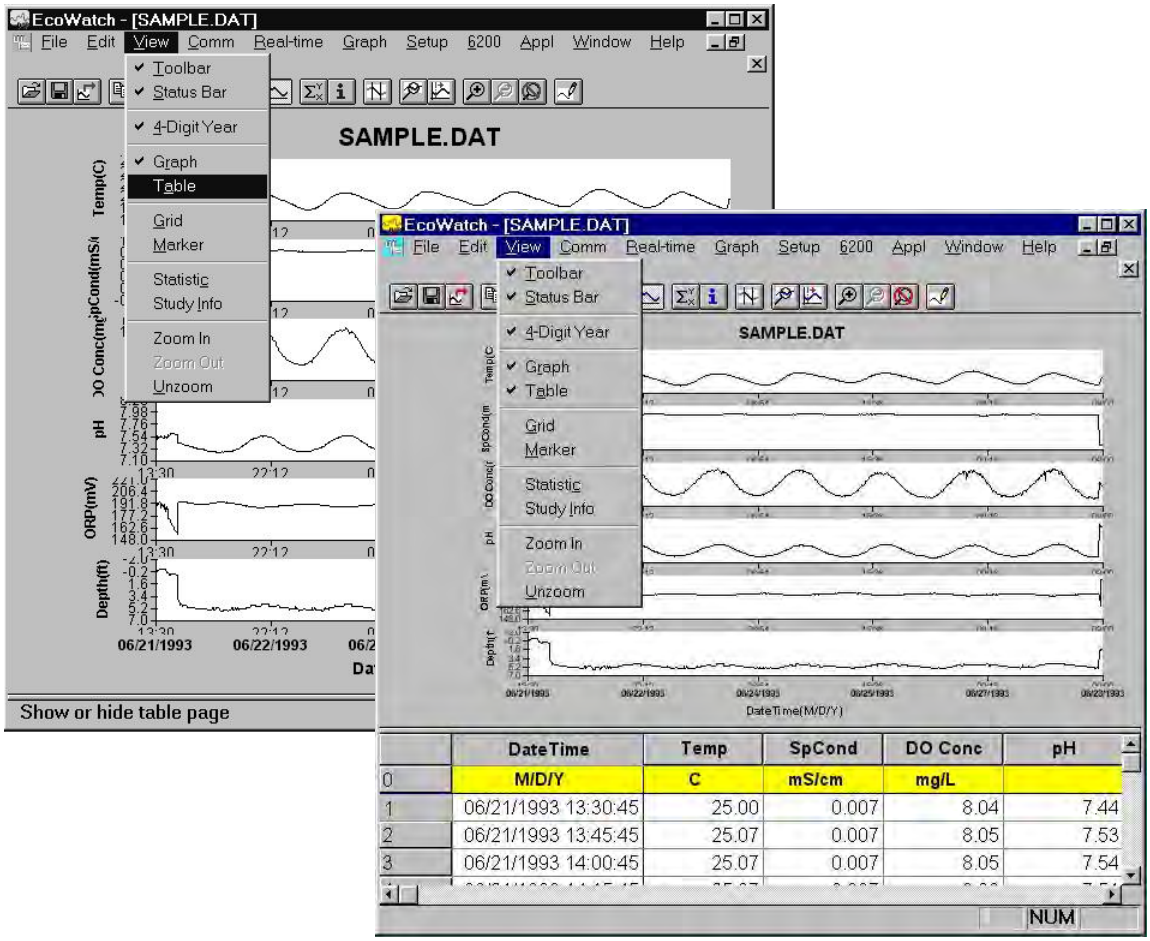

It may be somewhat awkward to scan the data table in this manner; therefore you have the option to turn off the graphical representation and allow the table to fill the window. See Figure 43. Notice now that when you click on **View**, the Graph item is no longer checked.

Figure 43 Viewing the Data in Table Format

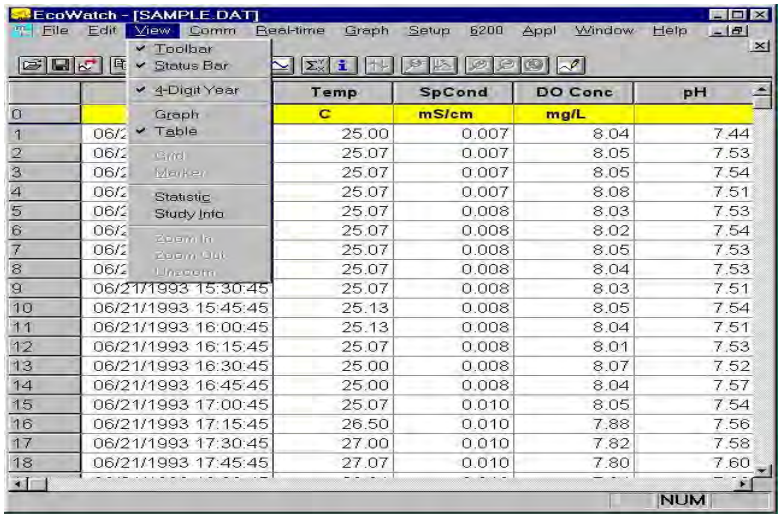

		Temp	SpCond	DO Conc	pH
0		C	mS/cm	mg/L	
1	06/2	25.00	0.007	8.04	7.44
2	06/2	25.07	0.007	8.05	7.53
3	06/2	25.07	0.007	8.05	7.54
4	06/2	25.07	0.007	8.08	7.51
5	06/2	25.07	0.008	8.03	7.53
6	06/2	25.07	0.008	8.02	7.54
7	06/2	25.07	0.008	8.05	7.53
8	06/2	25.07	0.008	8.04	7.53
9	06/21/1993 15:30:45	25.07	0.008	8.03	7.51
10	06/21/1993 15:45:45	25.13	0.008	8.05	7.54
11	06/21/1993 16:00:45	25.13	0.008	8.04	7.51
12	06/21/1993 16:15:45	25.07	0.008	8.01	7.53
13	06/21/1993 16:30:45	25.00	0.008	8.07	7.52
14	06/21/1993 16:45:45	25.00	0.008	8.04	7.57
15	06/21/1993 17:00:45	25.07	0.010	8.05	7.54
16	06/21/1993 17:15:45	26.50	0.010	7.88	7.56
17	06/21/1993 17:30:45	27.00	0.010	7.82	7.58
18	06/21/1993 17:45:45	27.07	0.010	7.80	7.60

Viewing features such as Grid, Marker, Zoom In, Zoom Out and Unzoom are all available when you activate the **Graph** function. Give each a try as you practice and learn more about the many features of EcoWatch.

The **Statistics** and **Study** functions of EcoWatch are shown in Figure 44. Both provide overview information related to the study data. The **Statistics** function lists minimum, maximum, mean and standard deviation information for each parameter activated. The **Study** function provides useful information about the design of the study including sample interval, date/time, number of samples, sensor identification and parameters reported. The Statistics and Study windows may be activated over either graph or table presentations.

To view either of these windows, click on **View**, highlight the desired function and click again. The window opens on top of the table or graph, similar to what is shown in Figure 43. Only one of these windows may open at one time. To continue, you must close the Statistics or Study window to return to the graph or table and activate the top line menu again.

As before practice viewing the functions mentioned above to gain more familiarity with these features.

Figure 44 Statistics and Study Information

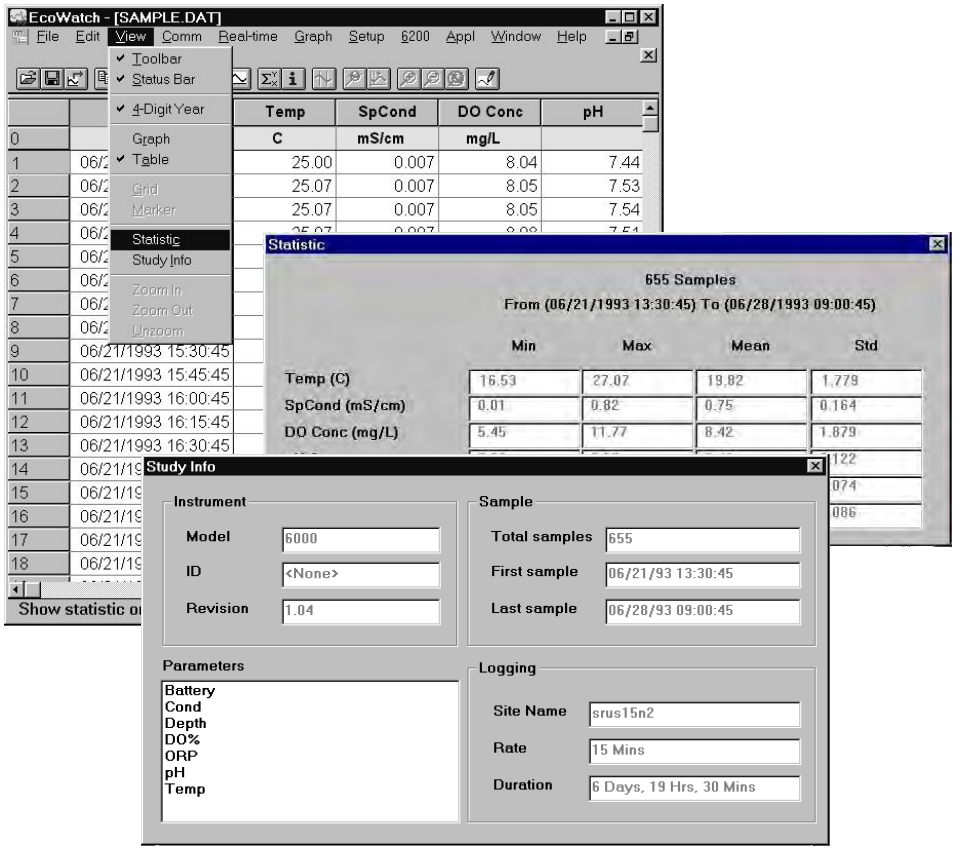

Next, with the Statistics and Study windows closed, return to the **View** menu, close **Table** and activate **Graph**.

Using the right mouse button, click at any point on the graph. A dotted vertical line appears along with specific data values in boxes to the left of the displayed graphs, as shown in Figure 45. You can hold down the right mouse button and move the mouse to scan the entire graph that is displayed in the window. The values in the boxes change as you move the mouse. This feature is very useful for quantifying specific data without the need to open the data table and scroll through what may be thousands of data points. Note also that the exact time and date change to let you know specifically when an event of interest occurred.

Figure 45 Viewing the Data with Right-Button Mouse Function

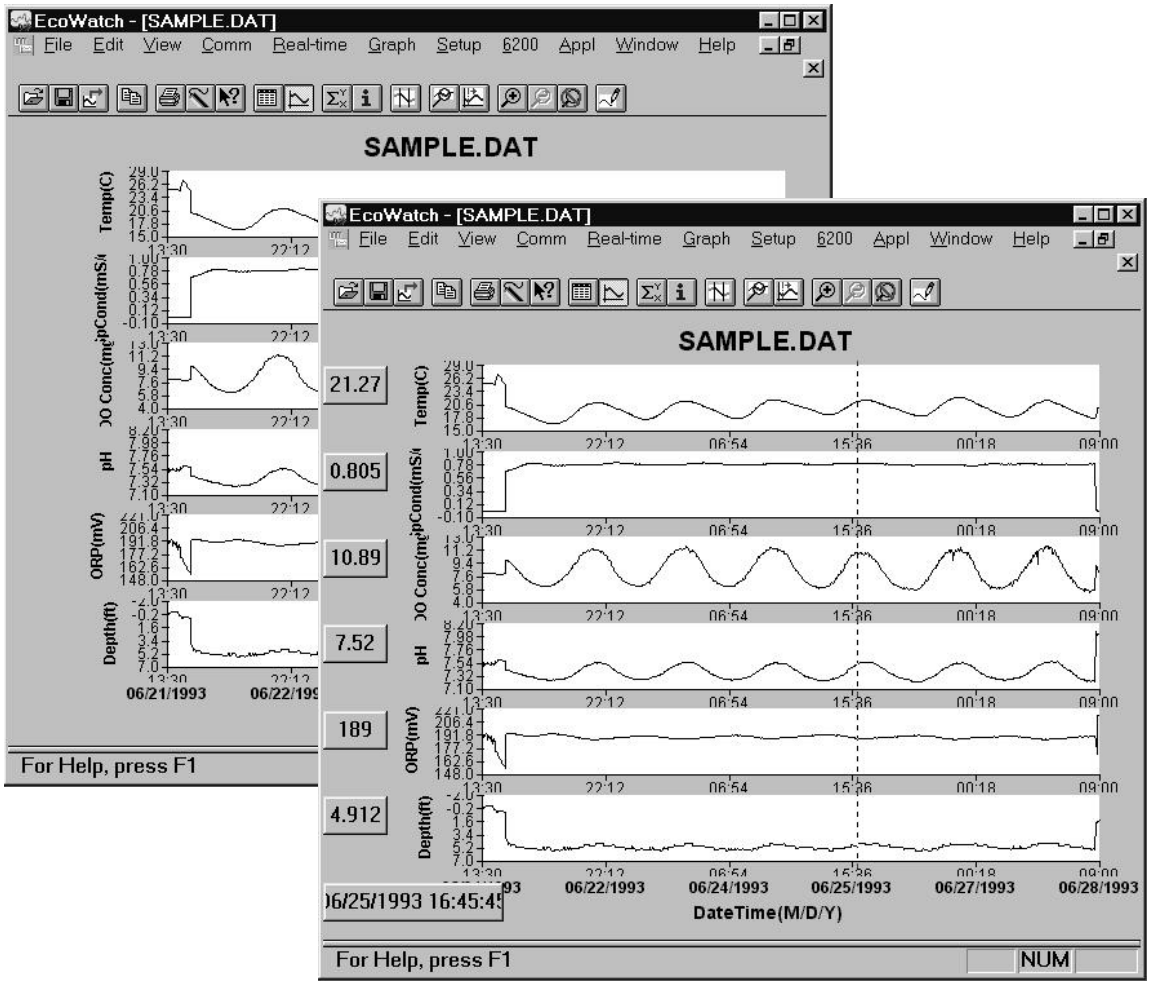

CHANGING DISPLAY FORMATS USING SETUP

Beyond selecting data viewing options such as table format or graphical format, you may also customize your data displays. For example, you may change the order in which parameters are viewed, you may add and delete parameters, you may change plot appearance using different interval times and different units, and you may change the x-axis if you prefer a parameter other than date or time.

The Top Line menu selection that allows you to select some of these parameter changes is **Setup**. Click on **Setup**, then **Parameters**. From here there are four submenus that allow you to Add/Remove parameters, change Units, change sample interval and/or x-axis (Attributes) and change the Names of the parameters you have assigned, as shown in Figure 46.

Figure 46 Changing the Appearance of a Graph or Table

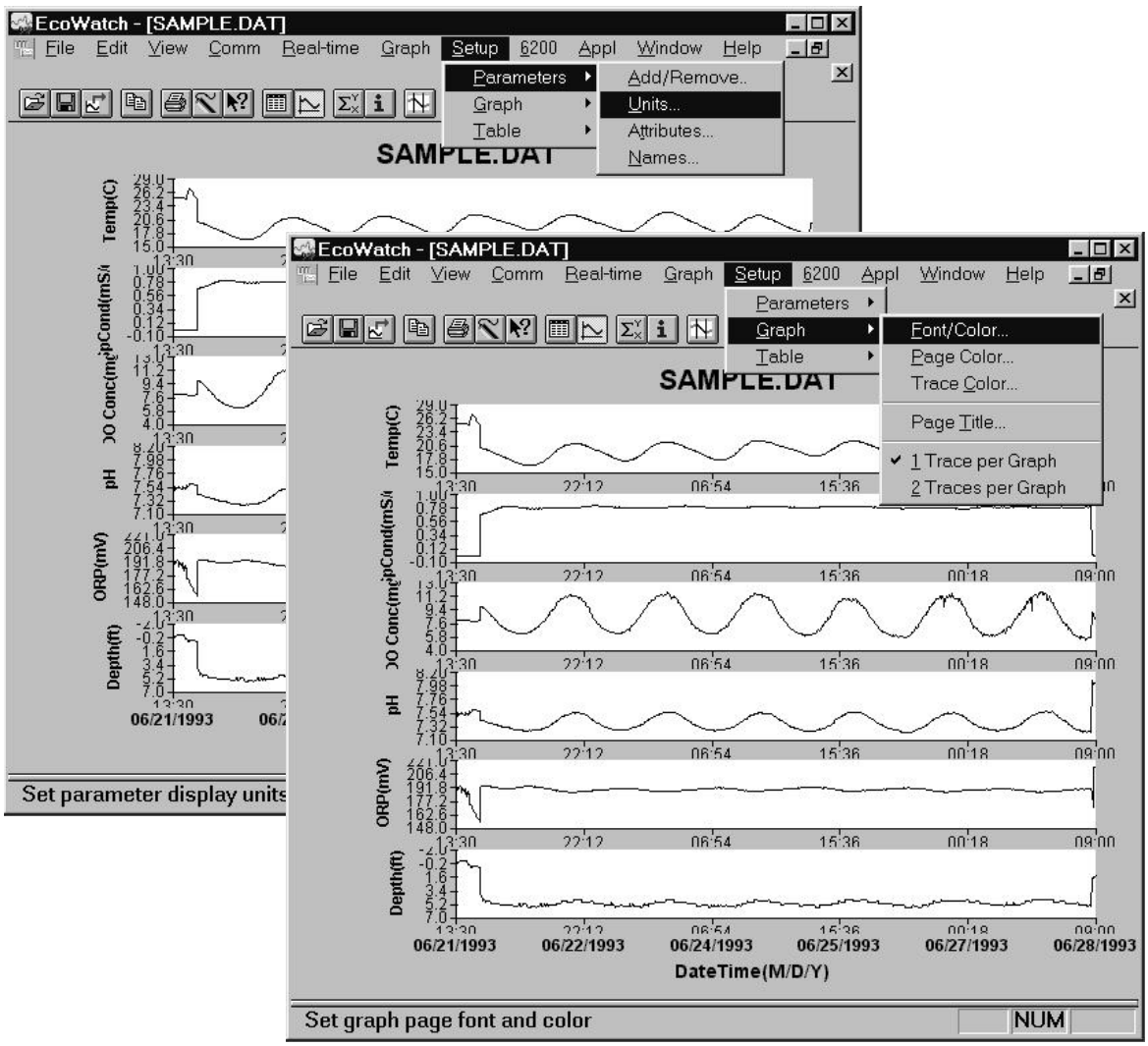

If you are displaying the graph, you may change the appearance by changing font, font style, size and text color. You may also change page color, trace color and graph background color. You may assign a custom 2-line title for the graph, and finally, you may display 1 trace or 2 per set of axes. For display of table formatted results you may change font, font style, size and text color. In addition, you may change table color and highlight color.

The menu structure is easy to follow. Try some changes to gain familiarity with these **Setup** display options.

CHANGING DISPLAY FORMATS USING 'GRAPH' FUNCTION

The top line menu labeled **Graph**, as the name suggests, can be used to examine critical events within the graphical format. You may be able to more clearly understand an event by zooming in/out, centering an event of interest, and setting limits to focus in on a specific area of the graph. In addition to modifying

along the x-axis, you may also manually scale the y-axis. This may allow you to discard a noise spike and obtain better resolution of events unrelated to the noise. Functions like Autoscale, Redraw and Cancel Limits are all used to "undo" some of the customization functions. Below in Figure 47 you see some of these functions.

One very commonly used function is **Limit Data Set**. If you choose this function by clicking on the highlighted item as shown below, you then use the mouse to move your cursor to the left limit of an area of interest, click once, then move the mouse to the right limit of interest and click again. The result will be a close up look at the specific area of the graph you have defined. Refer to Figure 47 and 48 below to see the results of this particular feature.

Figure 47 Selecting a Subset of Data within a Graph

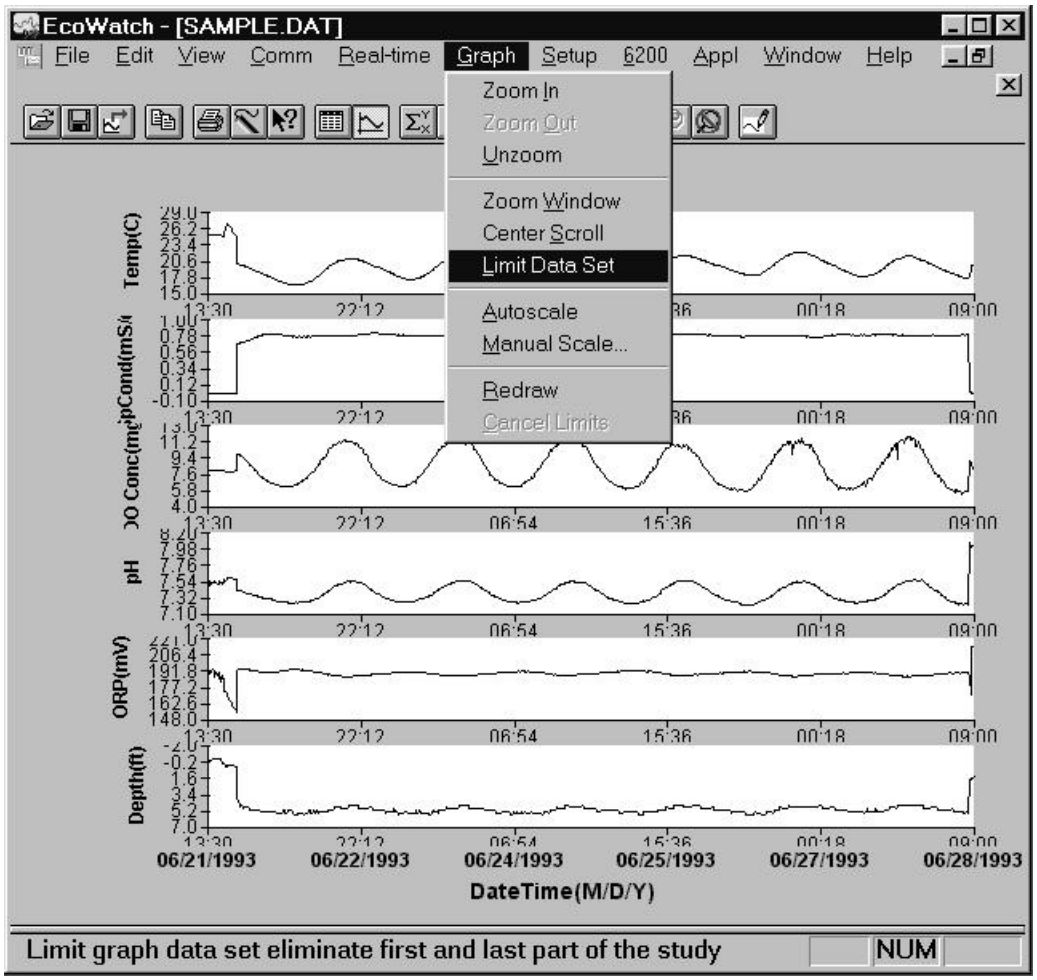

Figure 48 Using Limit Data Set to Display a Subset of Data

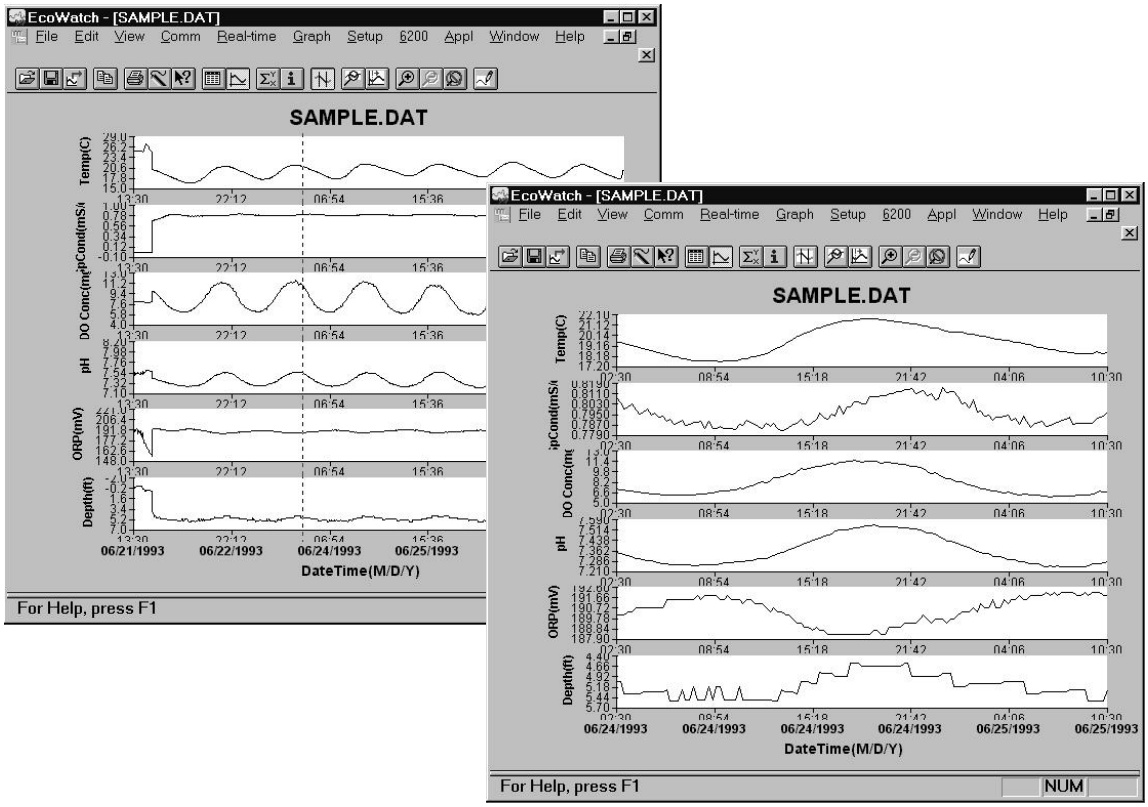

To return to the full set of data again, click on **Graph**, then **Cancel Limits**. If you desire a hard copy of any graph or table, or even a subset expression as shown above, you may use the **Edit, Copy** command to „copy" the graph in the active window to the "Clipboard". You can then „paste" this graph to the Windows application program of your choice. You may also be able to print graphs and tables as described in the next section.

SAVE, IMPORT, EXPORT AND PRINT COMMANDS

Under **File** function in the top line menu, you can save a particular presentation version of a data file and give the presentation a customized name. For example, you might want to call the expanded plot in Figure 48 "DIURNAL" using the **File|Save Data Display** command. This presentation will be saved with your data file and can be recalled in further by using the **File|Load Data Display** command. You can also export your custom data display as a spreadsheet compatible file (.CDF or .TXT) or print it to a compatible printer. You may also create a custom report format using **the File|Report** command. See Figure 49 for the **File** menu, which shows these commands. Use the Window"s Help function to learn more about these features.

Figure 49 Saving, Exporting, Printing and Related Functions

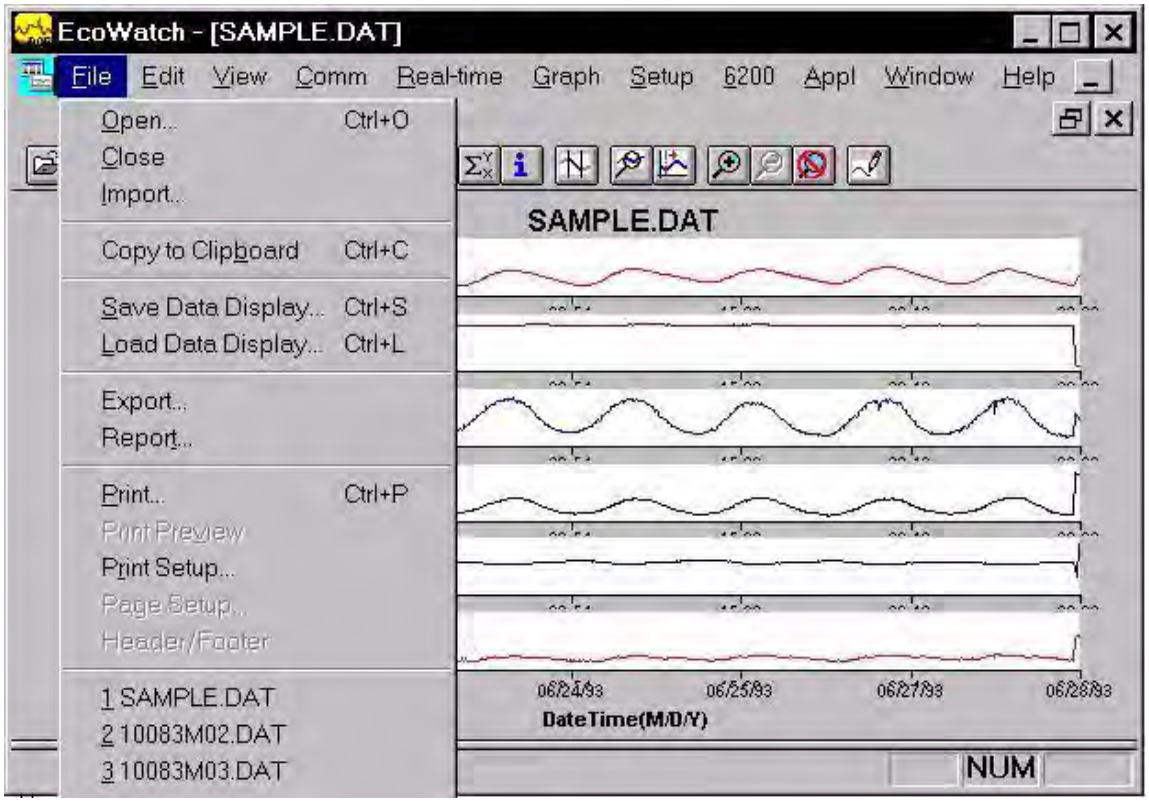

EXAMPLE OF CUSTOMIZING A SUBSET OF SAMPLE.DAT

To conclude this section we have used a few of the many tools available in EcoWatch to demonstrate how you might use this powerful plotting and reporting program to express study results. We encourage you to try some of the tools and learn more about EcoWatch by using the Window"s Help function, which is available when the EcoWatch program is running.

Using SAMPLE.DAT we decided that some of the data were not of particular interest, so using top line menu item **Setup**, then Parameters, then **Add/Remove,** we removed ORP and Depth results from the data set. Note that we have not deleted this information from the file, but rather we are choosing not to display it. You can always return to this function and add original data back. Under the same **Parameters** function, we have selected **Attributes** and changed the Average Interval from the default **0** to **60**. Since data was collected every 15 minutes, the change to a 60 minute interval helps to smooth out the graph and average out any short term "noise" events.

Next, we again select **Setup**, then **Graph**. From the functions available, we first selected Title Page… and typed in a name (Clear Lake Study #2) and below that we typed the parameters that are shown in the graph. Just below **Title Page,** we clicked on **2 Traces per Graph**. This combines adjacent parameters which is sometimes useful in parameter and event evaluation. For example, in the second graph shown in Figure 50 below, you see that DO concentration and pH seem to track rather closely and change in a diurnal rhythm. In actuality, when DO levels drop in a natural body of water, CO_2 often builds up forming carbonic acid which leads to lower pH readings. DO rises again during the day due to photosynthesis, CO_2 then falls and pH increases again. The final plot after making these changes in shown in Figure 50.

Figure 50 Customizing a Graph from SAMPLE.DAT

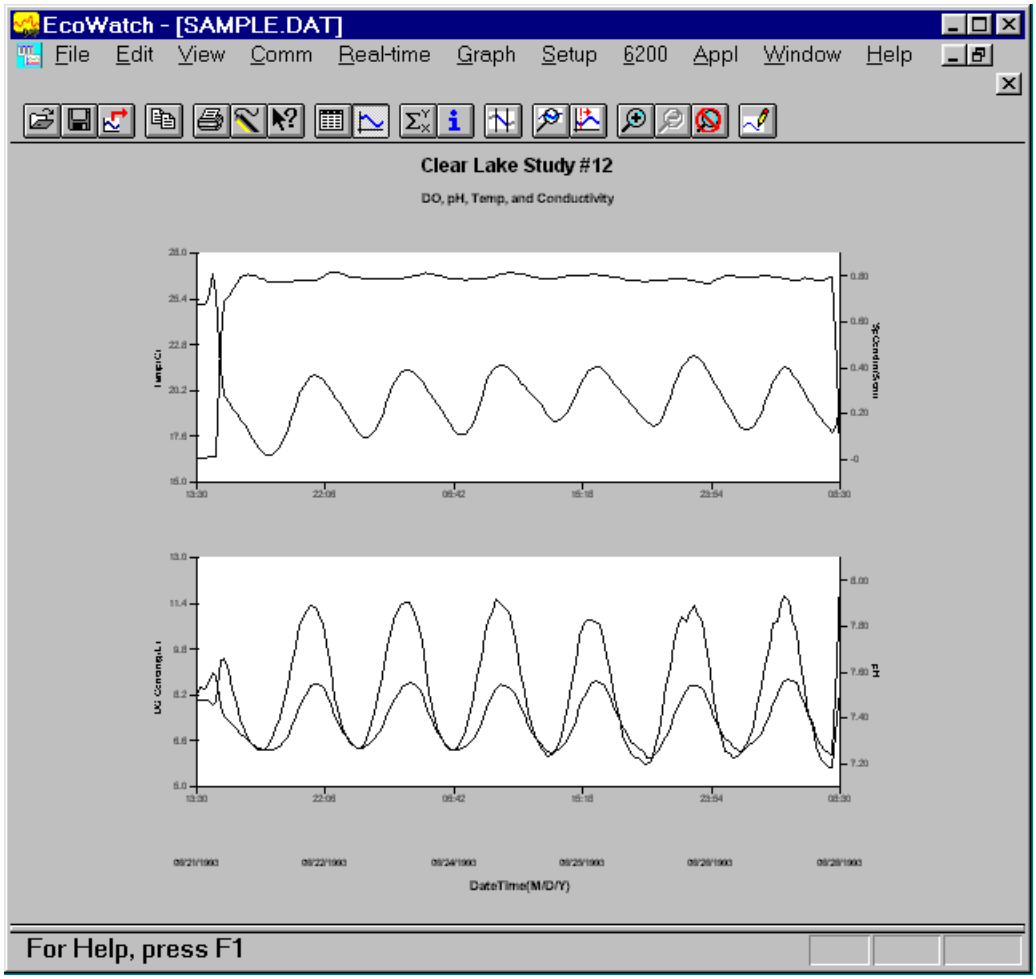

Finally, we selected **File|Save Data Display** and gave the custom plot the name "4PARAM" to that the presentation can be immediately recalled in the future.

As you become more familiar with EcoWatch for Windows, the plotting, analysis and reporting functions can be accomplished easily and quickly. Practice with all of the functions and, again, do not forget to use Window"s Help for more detail, or see Section 4, **EcoWatch for Windows**.

2.9 SONDE MENU

The functions of the sondes are accessible through the sonde menu. The sonde menu structure makes it simple and convenient to select functions. This section provides a description of the menus and their capabilities.

When moving between menus within the sonde software structure, use the **0** or **Esc** to back up to the previous menu. To exit menus and return to the sonde command line (the # sign), press **0 or Esc** until the question "**Exit menu (Y/N)?"** appears. Type **Y** and the command prompt ("#") will be shown. To return to the **Main** sonde menu, type **menu** and press **Enter.**

IMPORTANT MESSAGE!
WHAT IF THERE IS NO RESPONSE TO A KEYSTROKE?

To save power, the sondes will power down automatically if no interaction from the keyboard occurs for approximately 60 seconds. When the software is in this "sleep" mode, the first subsequent keystroke simply "wakes it up" and has no visible effect on the display. The next keystroke after the unit is "awakened" will be input to the software in the intended manner. Thus, if you press a key after the sonde has been inactive for some time and nothing seems to happen, press the key again.

To gain experience with the sonde menus, select the sonde icon in EcoWatch for Windows and press **Enter**. See Figure 40 above for the Sonde Menu Flow Chart.

In the following subsections you will learn about the functions of the various menu items and when to use them. The discussion of the menu and submenu functions is organized in numerical order, beginning with **Section 2.9.1 Run**

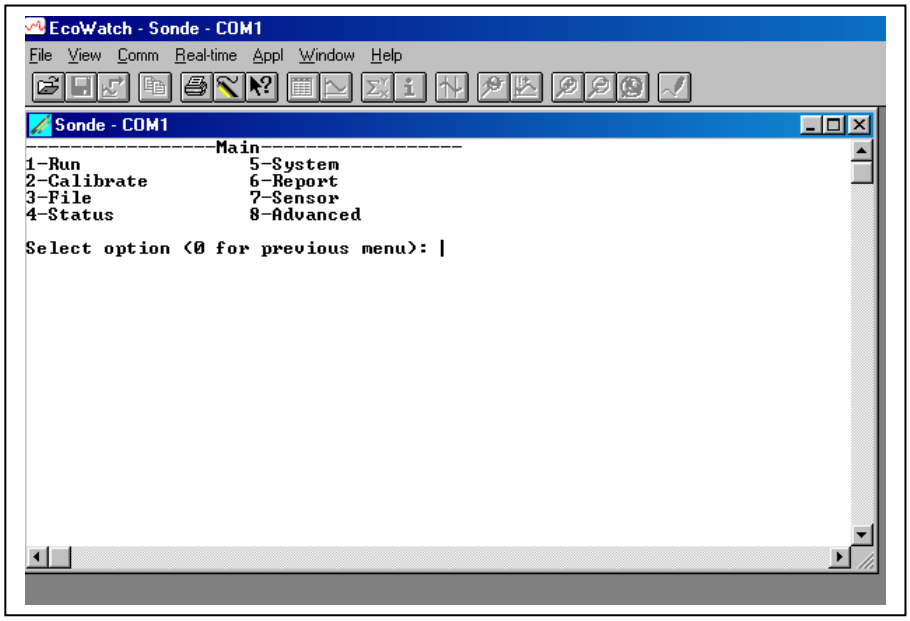

2.9.1 RUN

Select **1-Run** from the Main menu to begin taking readings or to set/verify the parameters required for a study. There are two options in the Run menu.

```
---------------Run setup---------------
1-Discrete sample
2-Unattended sample

Select option (0 for previous menu): 1
```

DISCRETE SAMPLING

Discrete sampling is usually used in short term, spot sampling applications when the user is present at the site and the unit is attached to a 650 MDS Display/Logger or laptop PC. It could be used in the vertical profiling of a lake or river where the user lowers the sonde incrementally into the water, and data acquired for a few minutes at each depth. In this section, you will learn how to use the sonde menu structure to open and close files, set the interval between samples, start the sampling operation, and log data to the internal memory of the sonde.

Select **1-Discrete sample** from the Run menu. The Discrete sample menu will be displayed.

```
------------Discrete sample------------
1-Start sampling
2-Sample interval=4
3-File=
4-Site=
5-Open file

Select option (0 for previous menu):
```

Select **1 – Start sampling** option to start discrete sampling. After the initial sampling time interval has passed (4 seconds in the screen above), sequential lines of data will appear on the screen.

```
==============================================================================
    Date      Time  Temp SpCond    Sal  DO     Depth    pH   Turbid  Battery
mm/dd/yy hh:mm:ss     C  mS/cm    ppt  mg/L    feet           NTU   volts
-------------------------------------------------------------------------------
*** 1-LOG last sample   2-LOG ON/OFF,  3-Clean optics***
05/05/97 10:04:40 21.57  0.009   0.00  7.73  -0.293  7.55        0.3    10.2
05/05/97 10:04:44 21.57  0.009   0.00  8.41  -0.300  7.55        0.3    10.3
*** LOG is ON,  hit 2 to turn it OFF,  3-Clean optics***
05/05/97 10:04:48 21.58  0.009   0.00  8.41  -0.302  7.55        0.3    10.3
05/05/97 10:04:52 21.58  0.009   0.00  8.40  -0.302  7.55        0.3    10.3
05/05/97 10:04:56 21.58  0.009   0.00  8.41  -0.303  7.55        0.3    10.2
05/05/97 10:05:00 21.58  0.009   0.00  8.42  -0.303  7.55        0.3    10.3
*** 1-LOG last sample   2-LOG ON/OFF ,  3-Clean optics***
05/05/97 10:05:04 21.58  0.009   0.00  8.44  -0.304  7.55        0.3    10.3
Sample logged.
05/05/97 10:05:08 21.58  0.009   0.00  8.45  -0.305  7.55        0.3    10.3
```

The following prompt will appear just below the screen header:
1-LOG last sample, 2-LOG ON/OFF, 3-Clean optics

- By entering **1–LOG last sample**, A single line of data can be logged to sonde memory and the following message will be displayed: **Sample logged.**

- By entering **2-LOG ON/OFF**, a set of data can be logged to memory and the following message will be displayed: **LOG is ON, hit 2 to turn it OFF, 3-Clean optics.** Press **2** again to terminate logging.

- By entering **3-Clean optics**, if your unit has an optical probe, the wiper will clean the optical surface**.** The **3-Clean optics** portion of the prompt will only appear if an optical probe was installed and enabled.

Select **Esc** or press **0** and return to the Discrete Sampling menu.

From the Discrete Sampling menu, select **2-Sample Interval** to type a number that represents the number of seconds between samples. The maximum sample interval is 32767 seconds (9+ hours). The factory default sample interval is 4 seconds and works best for most discrete sampling applications. The shortest possible sample interval for obtaining new DO readings is 4 seconds. If a smaller interval is selected, then the DO readings remain constant for the number of samples necessary to fill 4 seconds.

NOTE: If your have used your sonde with a 650 MDS data logger, the Sample Interval automatically be changed to 0.5 seconds.

Sampling Faster Than 0.5 Seconds

For special applications, your sonde is capable of faster sampling. The only limitation is a reduction of the number of sensors selected. To determine the maximum sampling frequency for your sensor setup, divide 36 by the number of enabled sensors in addition to the DO sensor.

Example:
If you enable any three sensors plus DO, divide 36 by 3 to obtain 12 samples/second (12 Hz) or 0.083 seconds between samples as the maximum sampling frequency. Remember that for sample intervals less than 4 seconds, DO readings are updated only every 4 seconds. Thus, at 12 Hz, the display will show 48 identical DO readings before a change occurs. Note also that at a faster sampling rate, consecutive readings are closer together, the threshold for any one sensor is less likely to be exceeded, and the data filter is less likely to disengage. For these applications you may want to adjust your threshold settings accordingly. See Section 2.9.8 for more information on the data filter.

Select **3-File** to enter a filename with a maximum of 8 characters. You will log readings to the filename that you enter.

If you started sampling without entering a filename, the default name NONAME1 will be assigned to your file. Whenever you press **1-LOG last sample** or **2-LOG ON/OFF** from the menu, NONAME1 will be opened during sampling. If this happens, and you want to restart the file with a different name, press **5-Close file** and rename the file.

Select **4-Site** to assign a site name with a maximum of 31 characters This allows you to enter the name of the site where you are sampling.

When you select **5-Open File**, a file is opened and the number 5 changes to **Close File**. When you are finished logging data to the file, press **5-Close File** and designation changes back to **Open File**. When you start logging the **Open File** designation changes automatically to **Close File**.

Now select **1-Start sampling** to start discrete sampling.

After the initial sampling time interval has passed, sequential lines of data will appear on the screen and you can log single or sequential data points and wipe the surface of your optical probe as described above.

UNATTENDED SAMPLING

This option is used for long-term deployment of the battery-powered sonde when the user is not present at the site. Prior to this selection, the sonde is usually attached to a computer in a laboratory and set up to automatically log data to sonde memory at a fairly long time interval (15-60 minutes). The unit is then taken to the field site and left for an extended time period (from 30 up to 150 days depending on the sensors used and the fouling conditions). When the study is complete, or the batteries are expended, the unit is brought back to the laboratory and the data file is uploaded to a computer. Quality assurance checks are performed prior to redeployment.

Select **2-Unattended Sampling** from the Run menu. The Unattended sample menu will be displayed. Use the following example to understand the unattended sampling option.

```
------------Unattended setup-----------
1-Interval=00:15:00
2-Start date=07/17/96
3-Start time=18:00:00
4-Duration days=14
5-File=clrlake3
6-Site=Clear Lake at Spillway
7-Bat volts: 9.1
8-Bat life 21.2 days
9-Free mem 18.9 days
A-1st sample in 8.10 minutes
B-View params to log
C-Start logging
```

Follow the prompts on this screen to prepare your sonde for unattended deployment as described below:

- Verify that the current time and date are correct to ensure that your unattended sampling study begins and ends when you desire. To verify correct the time and date, return to the Main menu and enter **4-Status** or **5-System**. You may enter the correct date and time from either of these submenus.

- Select **1-Interval** and enter the desired time between samples

- Select **2-Start Date** and **3-Start Time** to set the time that data will begin to log to sonde memory. . Use the 24-hour clock format to enter the time. If you do not make any change to these entries, then the study will automatically begin at the next integral time interval once you have pressed **C-Start logging**.

  Example: If the current time is 17:20:00 and your sample interval is 15 minutes, logging will automatically begin at 17:30:00.

It is better to start the study prior to taking the unit to the field so that you can confirm that readings are being saved to memory and carry out initial quality assurance. However, if your study demands that you start the instrument at the site at 6:00 PM, change the Start Time to 18:00:00.

- Select **4-Duration** and set the length of the study in days. The default value is 365 days (which is longer than most deployments). In most cases, you will either want to stop the unattended study manually or allow the batteries to be expended. It is wise to set the duration to a value longer than the anticipated deployment. If you cannot retrieve the sonde at the expected time due to factors beyond your control such as weather or illness, data will continue to be acquired as long as battery power is present.

- Select **5-File** and enter a name of no more than 8 characters that will be used by your external computer to identify the study. Be sure to use ONLY alpha/numeric characters.

- Select **6-Site** and enter a site name of no more than 31 characters. This filename will appear in your sonde file directory, but will not be used to identify the file after transfer to your computer.

- Check **7-Battery** to make certain that the voltage is suitable for the length of the study that you are about to begin. No change can be made to this item via the software. Note that no battery entry will appear for the 600R, 600QS, 600XL, and 6820V2-1 sondes.

- Select **B-View Parameters to log** to confirm that your sensor and report setups are configured correctly as described in Sections 2.9.6 and 2.9.7. An example screen is shown below.

```
-------------Params to log-------------
1-Temp C            6-Orp mV
2-Cond mS/cm        7-NH4+ N mg/L
3-DOsat %           8-NO3- N mg/L
4-DOchrg            9-Turbid NTU
5-pH                A-Battery volts

Select option (0 for previous menu):
```

In some cases, the **View params to log** screen only identifies the raw parameters that are used in the calculation of the items that you have selected in the Report setup.

> **Example:** You have selected DO mg/L in the Report setup, but it does not appear under **View parameters to log** because it is calculated from DO saturation %,Temperature, and Conductivity. Likewise, although specific conductance is selected in the Report setup, it does not appear under **Parameters to log** because it is calculated from Conductivity and Temperature. In all but a few cases, the proper configuration of **Parameters to log** will be automatically set up as long as the sensor is enabled.

There are several items that must be activated in the Report setup so they will be available from the file after upload. These special parameters are: DO Chg, DOSat %Local, ODOsat %Local, pH mV, $NH4^+$ mV, $NO3^-$ mV, Cl^-mV, PAR1, PAR2, Chl RFU, BGA-PC RFU, and BGA-PE RFU. If you want to log any of these parameters to your data file, be certain that they are active in the Report setup before you begin the unattended study.

After making the above entries, the sonde software will automatically estimate the expected battery life, and the time it will take for the sonde memory to be filled. This information is displayed on the screen for your consideration. If the battery life or the free memory capacity will be exceeded sooner than the duration, you may want to make some changes to the sonde set-up or the batteries themselves. For example, you can free up memory in the sonde by uploading all existing files from the sonde memory to your PC and then deleting them from the sonde (see **3-File** from Main Menu). You may want to change the batteries for longer battery life. You can lengthen the sampling interval to extend both battery life and memory capacity.

The predicted battery life is an estimate only. The temperature of the site and the brand of batteries used can affect battery life. It is recommended to recover the sonde earlier than the predicted battery life, and to use new batteries for each deployment.

Once you press **C-Start logging**, the following screen will appear.

```
-------------Start logging-------------
Are you sure?
1-Yes
2-No

Select option (0 for previous menu):
```

Select **1-Yes** and the screen will change.

```
----------------Logging----------------
1-Interval=00:15:00
2-Next at 07/17/96
3-Next at 18:00:00
4-Stop at 07/31/96
5-Stop at 18:00:00
6-File=clrlake3
7-Site=Clear Lake at Spillway
8-Bat volts: 9.0
9-Bat life 21.2 days
A-Free mem 18.9 days
B-Stop logging
C-Show Live Data

Select option (0 for previous menu):
```

The display now shows the next date and time for logging and the stop date and time for the logging study. Most importantly, note that the bottom command now shows **B-Stop logging**, a confirmation that the logging has indeed been initiated.

If you select **C-Show Live Data** and leave the sonde attached to your PC, the data points will be shown on the screen as they are stored to internal memory.

The Unattended study will terminate when the duration you specified has expired or the batteries are expended. If you want to terminate sooner, simply select **2-Unattended** sample from the Run menu, then **B-Stop logging**. Select **1-Yes** and return to the Unattended setup menu.

```
Stop logging?
1-Yes
2-No

Select option (0 for previous menu):
```

2.9.2 CALIBRATE

All of the sonde sensors (except temperature) require periodic calibration to assure high performance. However, the calibration protocols for Rapid Pulse Polarographic dissolved oxygen are significantly different depending on whether the sonde is being set up for spot sampling or longer term unattended monitoring studies. This difference is user-selectable and is required primarily because the optimal performance of the Rapid Pulse dissolved oxygen sensor cannot be attained unless the control of this sensor varies from short term to long term applications.

For spot sampling it is best to pulse the sensor continuously during the **Run** mode to attain the most accurate results and optimize the response time. However, this continuous pulsing is not ideal for longer term logging studies in which the sonde data is captured to sonde memory or to a data collection platform at much less frequent intervals (e.g. 15 minutes). Continuous pulsing not only shortens the time between required probe maintenance, but consumes more power. With proper selection of the "Auto sleep" option (discussed in detail in **Section 2.9.8, Advanced Menu**), the user can configure the sonde software to either run continuously or "go to sleep" between samples to minimize Rapid Pulse DO probe wear and conserve power. The effect of this choice on the user interface relative to dissolved oxygen calibration is significant as described below:

- If "Auto sleep" is **deactivated**, the sonde runs continuously no matter what sample interval has been selected. Under these conditions, the user retains manual control of the dissolved oxygen calibration routine, viewing the stabilization of the readings in real time and confirming the calibration with keyboard entries.

- If "Auto sleep" is **activated**, the sonde will „warm up" the sensors for the period of time selected for the DO sensor. Under these conditions, the user loses manual control of the Rapid Pulse DO calibration routine. Rapid Pulse DO will automatically calibrate after the selected time for warm up of the DO sensor has expired. In this mode of calibration, you do not observe stabilization of the readings in real time, but instead will observe a countdown of the warm up period followed by a message indicating that the Rapid Pulse DO calibration is complete.

Only the calibration of Rapid Pulse dissolved oxygen is affected by whether "Autosleep" is on or off; the user retains manual control of the calibration of all other parameters regardless of the "Auto sleep" setting. Once a particular warm up time (in seconds) has been utilized in Rapid Pulse DO calibration, the length of that time should not be changed during a study. A new calibration should be performed whenever the value of the warm up time is altered.

Note that the ROX Optical DO sensor is not subject to the above issues relative to the activation of "Autosleep RS232" for the Rapid Pulse DO sensor. The ROX sensor calibrates in the same way as any other sensor such as conductivity, pH, or turbidity where the user manually confirms the calibration after the sensor readings have shown stability.

From the Main sonde menu select **2-Calibrate**. The Calibrate menu will be displayed. Only the enabled parameters will be available for calibration.

```
---------------Calibrate--------------
1-Conductivity      6-ISE3 NH4+
2-Dissolved Oxy     7-ISE4 NO3-
3-Pressure-Abs      8-ISE5 Cl-
4-ISE1 pH           9-Optic T-Turbidity 6136
5-ISE2 ORP          A-Optic C - Chlorophyll

Select option (0 for previous menu):
```

CONDUCTIVITY

Select **1-Conductivity** to calibrate the conductivity probe and a second menu will offer you the options of calibrating in specific conductance, conductivity, or salinity. Calibrating any one option automatically calibrates the other two. After selecting the option of choice (specific conductance is normally recommended), you will be asked to enter the value of the standard used during calibration. Be certain that the units are correct. After pressing **Enter**, you will be able to follow the stabilization of the readings and confirm the calibration when the readings are stable by pressing **Enter** as instructed on the screen. Then, as instructed, press **Enter** again to return to the Calibrate menu.

RAPID PULSE POLAROGRAPHIC DISSOLVED OXYGEN WITH AUTOSLEEP ON

If you intend to do Unattended Sampling, it is recommended that you turn Autosleep RS232 "on" in the Advanced|Setup menu and follow these instructions for DO calibration. If you intend to do Discrete Sampling, it is recommended that you turn Autosleep RS232 "off" and use the calibration instructions in the next section.

Select **2-Dissolved oxygen** to calibrate the oxygen probe. The submenu will offer you the option of calibrating in percent saturation or mg/L. After selecting the option of choice (percent saturation in water-saturated air is normally recommended), you will be prompted for the next step. Calibrating either of the choices will automatically calibrate the other.

For the percent saturation mode, be certain that the sensor has been thermally equilibrated in water-saturated air and that the sensor shows stable readings prior to beginning the calibration routine, particularly after a membrane change. Note, however, that the sensor should be "off" for at least 5 minutes before initiating a calibration procedure with "Autosleep" active. If possible, it is ideal that the sensor be "off" for a time equal to the sample interval in the upcoming study.

Remember, the Calibration Cup is designed to be air-tight and must be loosened if it is used as a calibration chamber. See **Section 2.6, Calibration** for more details. Follow the screen prompt and enter the local barometric pressure in mm Hg, (inches Hg x 25.4), press **Enter**, and the calibration will automatically occur after the warm-up time which has been selected by the user (default is 40 seconds). Then, as instructed, press **Enter** again to return to the Calibrate menu. Note that at calibration, the DOsat % (percent air saturation) value will reflect the barometer value that was entered. For example, if a barometric pressure of 720 mm is entered, the DOsat % value will change to 94.7 % (720/760 x 100).

Note that the parameter "DOsat %Local" is also available for users who prefer to set their percent air saturation value to 100%, no matter what barometer value is entered. The method of activating this parameter, its use, and its limitations are described in **Appendix J** of this manual. The key factor to remember, however, is that no matter which convention (DOsat % or DOsat %Local) is selected, the mg/L value will not be affected.

For the mg/L mode, calibration is carried out in a water sample which has a known concentration of dissolved oxygen, usually determined by Winkler titration. For this calibration procedure, the sensor should be immersed in the water. After thermal equilibration, enter the known mg/L value, press **Enter**, and the calibration procedure will be carried out automatically as for the percent saturation mode above.

RAPID PULSE DISSOLVED OXYGEN WITH AUTOSLEEP OFF

If you intend to do Discrete Sampling, it is recommended that you turn Autosleep "off" in the Advanced|Setup menu and follow these instructions for DO calibration. If you intend to do Unattended Sampling, it is recommended that you turn Autosleep "on" and using the calibration instructions in the preceding section.

Select the **Dissolved Oxygen** option from the **Calibrate** menu to calibrate the oxygen probe. The submenu will offer you the option of calibrating in percent saturation or mg/L. After selecting the option of choice (percent saturation in water-saturated air is normally recommended), you will be prompted for the next step. Calibrating either of the choices will automatically calibrate the other.

For the percent saturation mode, be certain that the sensor has been thermally equilibrated in water-saturated air and that the sensor has stabilized prior to beginning the calibration routine, particularly after a membrane change. Relieve pressure in the cup if necessary. Remember, the Calibration Cup is designed to be air-tight and must be loosened if used as a calibration chamber. Then follow the screen prompt and enter the local barometric pressure in mm Hg, (inches Hg x 25.4), press **Enter**, and monitor the stabilization of the DO readings. After no changes occur for approximately 30 seconds, press **Enter** to confirm the calibration. Then, as instructed, press Enter again to return to the **Calibrate** menu. Note that at calibration, the DOsat % (percent air saturation) value will reflect the barometer value that was entered. For example, if a barometric pressure of 720 mm is entered, the DOsat % value will change to 94.7 % (720/760 x 100).

Note that the parameter "DOsat %Local" is also available for users who prefer to set their percent air saturation value to 100%, no matter what barometer value is entered. The method of activating this parameter, its use, and its limitations are described in **Appendix J** of this manual. <u>The key factor to remember, however, is that no matter which convention (DOsat % or DOsat %Local) is selected, the mg/L value will not be affected.</u>

For the mg/L mode, calibration is carried out in a water sample which has a known concentration of dissolved oxygen, usually determined by a Winkler titration. For this calibration procedure, the sensor should be immersed in the water. After thermal equilibration, enter the known mg/L value, press **Enter**, and the calibration procedure will begin with similar viewing of stabilization and confirmation of calibration as for the percent saturation mode above.

NOTE: If you have resurfaced your DO sensor, we recommend running the probe continuously for 15-30 minutes or until good stability is realized. After only a membrane change (no resurfacing), run the probe continuously for 3-4 minutes or until good stability is realized.

ROX OPTICAL DISSOLVED OXYGEN

Understanding the Factory Calibration of the ROX Optical DO Sensor

Unlike all other sensors for YSI 6-series sondes, the response of the ROX Optical DO sensor is not linear relative to the species being measured. This non-linearity requires that the sensor be factory-calibrated at a number of oxygen values and the data fit to a third-order regression. The three constants and the sensor value at zero dissolved oxygen which define this regression analysis are automatically stored in the sensor at the time of factory-calibration. It is important to note that these constants are a function of the sensor

membrane installed on the 6150 probe and NOT a function of the probe, i.e., the constants reflect the characteristics of the sensor membrane and NOT the probe. When a 6150 probe is purchased from YSI, it already has a sensor membrane installed and the constants of that membrane are transferred automatically to the sonde PCB when the sensor is run for the first time. After transfer, the constants can be viewed by accessing the **Advanced|Cal Constants** menu as shown below – the regression constants are ODO K2-ODO K4 and the value at zero oxygen is K1 as shown below.

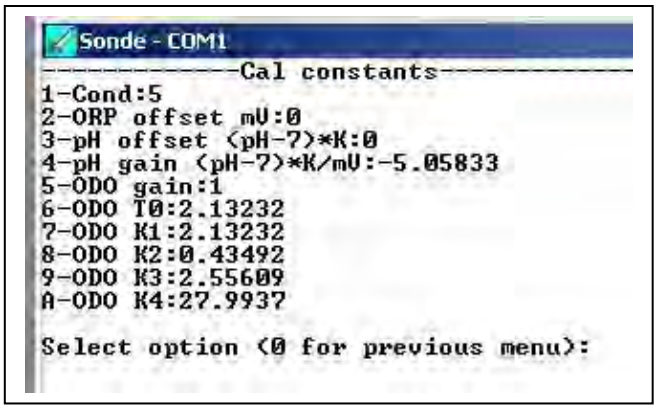

It should also be noted that the ROX sensor is characterized by two additional parameters – ODO Gain and Tzero. The ODO gain reflects the small change in the calibration which is carried out be the user in a 1-point calibration as described below. The Tzero value will always be the same as K1 until the user elects to perform a 2-point calibration as described below at which time it will change slightly to reflect the adjustment of the zero oxygen value.

You will also note that a different set of constants for your specific sensor membrane are supplied on the instruction sheet which came with your 6150 probe. These five constants (K1-K4 and C) have a different appearance than those shown in **Advanced|Cal Constants** because they are in coded form to allow error-free reentry by the user in the unlikely event that the regression constants in the probe are lost. The C constant is a check sum value associated with the values of K1-K4 and will prevent acceptance of the constants if typographical errors are made in their entry by the user. The coded constants must be entered in the **Calibrate|Optic X – Dissolved Oxy|Enter Cal Sheet** as shown below. The constants can also be viewed at any time by selecting **Calibrate|Optic X – Dissolved Oxy|View Cal Sheet.**

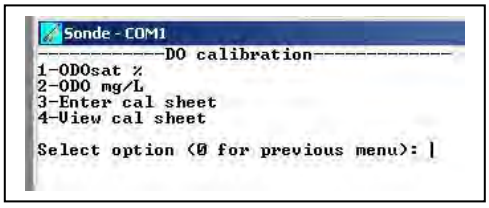

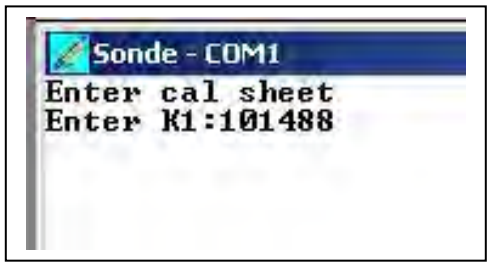

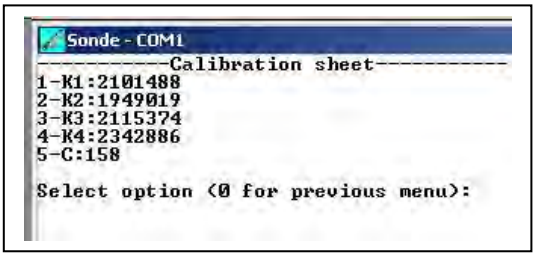

YSI recommends that your replace your sensor membrane after 1 year of use by purchasing the 6155 Optical DO Membrane Replacement Kit. This kit will be supplied with a new set of coded constants

which characterize the new membrane and they MUST be entered via the **Calibrate|Optic X – Dissolved Oxy|Enter Cal Sheet** selection as show above. Once the new constants have been entered in coded form they will be transferred to the probe and will be visible in uncoded form in Advanced|Cal Constants.

See **Section 5.9, Principles of Operation** and **Appendix M, ROX Optical DO Sensor** for more information.

User Calibration of the ROX Optical DO Sensor

NOTE CAREFULLY: As opposed to the 6562 Rapid Pulse Polarographic DO sensor described above, there is no difference between the calibration routine for sensors which will be used for sampling or monitoring applications. Usually the Autosleep RS-232 feature in the **Advanced|Setup** menu will be activated for ROX calibrations, but there is no problem if it is not active.

Select the **Optic X-Dissolved Oxy** option from the **Calibrate** menu to calibrate the oxygen probe. The submenu will offer you the option of calibrating in either percent air-saturation (ODOsat %) or oxygen concentration (ODO mg/L) units. Calibrating either of the choices will automatically calibrate the other. After selecting the option of choice (ODOsat % in water-saturated air or air-saturated water is normally recommended), you will be prompted for the next step where you must elect to do either a 1-point or a 2-point calibration. Except under unusual circumstances as described below, you should select the 1-point option for the ROX Optical DO calibration.

Calibration Using Percent Air Saturation – 1-Point

NOTE: YSI recommends that you use this method for calibration of your 6150 Dissolved Oxygen Sensor to obtain the maximum accuracy under normal operating conditions.

Place the sensor either (a) into a calibration cup containing about 1/8 inch of water which is vented by loosening the threads or (b) into a container of water which is being continuously sparged with an aquarium pump and air stone. Wait approximately 10 minutes before proceeding to allow the temperature and oxygen pressure to equilibrate.

Select **ODOsat %** and then **1-Point** to access the DO calibration procedure. Calibration of your Optical dissolved oxygen sensor in the DO % procedure also results in calibration of the DO mg/L mode and vice versa.

Enter the current barometric pressure in **mm of Hg.** (Inches of Hg x 25.4 = mm Hg).

Note: Laboratory barometer readings are usually "true" (uncorrected) values of air pressure and can be used "as is" for oxygen calibration. Weather service readings are usually not "true", i.e., they are corrected to sea level, and therefore cannot be used until they are "uncorrected". An approximate formula for this "uncorrection" (where the BP readings MUST be in mm Hg) is:

True BP = [Corrected BP] – [2.5 * (Local Altitude in feet above sea level/100)]

Press **Enter** and the current values of all enabled sensors will appear on the screen and change with time as they stabilize. Observe the readings under ODOsat %. When they show no significant change for approximately 30 seconds, press **Enter**. The screen will indicate that the calibration has been accepted and prompt you to press **Enter** again to return to the **Calibrate** menu.

The minor advantages and disadvantages of calibration in air-saturated water versus water-saturated air are outlined in **Appendix M, ROX Optical DO Sensor**

Calibration Using mg/L – 1-Point

Place the sensor in a container which contains oxygen of a known concentration of dissolved oxygen in mg/L AND THAT IS WITHIN +/- 10% of AIR SATURATION as determined by one of the following methods:

- Winkler titration
- Aerating the solution and assuming that it is saturated, or
- Measurement with another instrument.

CAUTION: Carrying out DO mg/L calibrations at values outside the range of +/- 10 % of air saturation is likely to compromise the quoted accuracy specification of the 6150 Optical DO Sensor.

Wait approximately 10 minutes before proceeding to allow the equilibration of the temperature and oxygen sensors.

Select **ODO mg/L** and then **1-Point** to access the mg/L calibration procedure. Calibration of your optical dissolved oxygen sensor using the DO mg/L procedure also results in calibration of the ODOsat % mode and vice versa.

Enter the known mg/L concentration and press **Enter**. The current values of all enabled sensors will appear on the screen and change with time as they stabilize. Observe the readings under ODO mg/L and, when they show no significant change for approximately 30 seconds, press **Enter**. The screen will indicate that the calibration has been accepted and prompt you to press **Enter** again to return to the **Calibrate** menu.

2-Point Calibrations

By selecting either **ODOsat %** and then **2-Point** or **ODO mg/L** and then **2-Point** from the appropriate menus, you will be able to calibrate your sonde at zero oxygen and in water-saturated air or air-saturated water (if you select **ODO%)** or at zero oxygen and a known concentration of oxygen within +/-10% of air-saturation (if you select **ODO mg/L).** These two-point calibrations should be done ONLY if you suspect that your 6150 Optical DO sensor is less accurate than you require at low oxygen values. The key to performing a 2-point calibration is to make certain that your zero oxygen medium (probably either nitrogen gas or an aqueous solution of sodium sulfite at a concentration of approximately 2 g/L) is truly oxygen-free as described in the tips below:

- If you use nitrogen gas for the zero point calibration, you should make certain that the vessel you use has a SMALL exit port to prevent back diffusion of air and that you have completely purged the vessel before confirming the calibration.

- If you use sodium sulfite solution for the zero point calibration, you should make up the solution at least 2 hours prior to use and keep it sealed in a bottle which does not allow diffusion of oxygen through the sides of the container. You should also transfer the sodium sulfite solution rapidly from its container to the sonde calibration cup, fill the cup as full as possible with solution to minimize head space, and seal the calibration cup to the sonde to prevent diffusion of air into the vessel.

To implement the 2-point calibrations, place the 6150 and the temperature sensor in a zero oxygen medium. Then sel**ect** either **ODO%** and then **2-Point** or **ODO mg/L** and then **2-Point** from the **Calibrate|Optic T Dissolved Oxy** menu. For either calibration routine, you MUST ENTER ZERO at the first prompt asking for ODO in mg/L. Then view the readings in real time and when they are stable, press **Enter** to confirm the zero point calibration.

CAUTION: Be certain that you wait at least 10-12 minutes and until the readings are stable for at least 2 minutes before confirming the zero point calibration entry.

NOTE CAREFULLY: If you used sodium sulfite solution as your zero calibration medium, you MUST carefully remove all traces of the reagent from the probes prior to proceeding to the second point. YSI recommends that the second calibration point be in air-saturated water if you use sodium sulfite solution as your zero oxygen medium.

After confirming the zero point calibration, place the sensors in the medium containing a known oxygen pressure or concentration and wait at least 10 minutes for temperature equilibration. Then enter either the barometer reading in mm Hg (for **ODO% 2-Point** calibrations) or the actual concentration of oxygen which was probably determined from a Winkler titration (for **ODO mg/L 2-Point** calibrations). Press **Enter** and observe the readings in real time until they are stable. Then press **Enter** again to confirm the calibration. The screen will indicate that the calibration has been accepted and prompt you to press **Enter** again to return to the **Calibrate** menu.

CAUTION: Carrying out DO mg/L calibrations at values outside the range of +/- 10 % of air saturation for the second calibration point in the 2-Point routine is likely to compromise the quoted accuracy specification of the 6150 Optical DO Sensor.

NOTE CAREFULLY: It will normally not be necessary to perform 2-Point calibrations for the 6150 Optical DO Sensor and the procedure is not recommended unless (a) you are certain that the sensor does not meet your accuracy requirements at low DO levels and (b) you are operating under conditions where you are certain to be able to generate a medium which is truly oxygen free.

Note that the parameter "ODOsat %Local" is also available for users who prefer to set their percent air saturation value to 100%, no matter what barometer value is entered. The method of activating this parameter, its use, and its limitations are described in **Appendix J** of this manual. The key factor to remember, however, is that no matter which convention (ODOsat % or ODOsat %Local) is selected, the mg/L value will not be affected.

PRESSURE – ABS AND GAGE

Select **Pressure – Abs (non-vented) or Gage (vented)** to zero the depth sensor. The depth sensor is factory calibrated, but it is always necessary to zero the absolute sensor relative to the local barometric pressure. A minor correction is also sometimes necessary to set the Gage (vented) sensor output to exactly 0.000 feet or meters. The zeroing procedure should be carried out with the sonde in air for this initial calibration. Alternatively, you may set zero or an offset while the sonde is submersed for "relative depth" applications. After the depth option is selected, enter 0.00 (or other appropriate value in feet or meters depending on your Report setup) at the prompt, press **Enter** and monitor the stabilization of the depth readings. After no changes occur for approximately 30 seconds, press **Enter** to confirm the calibration. As instructed, press **Enter** again to return to the Calibrate menu.

Zeroing the depth sensor by the above protocol (entering 0.00 at the screen prompt) will result in a measurement of the distance between the water surface and the ports of the depth module. In order for the observed depth readings to reflect the distance between the water surface and the actual probe array, measure the length between the upper hole and the bottom of the sonde guard. Then, if you are concerned about this small difference, enter the measured difference (in feet or meters depending on your Report setup) at the screen prompt instead of 0.00.

For best performance of depth measurements, users should ensure that the sonde"s orientation remains constant while taking readings. This is especially important for vented level measurements and for sondes with side mounted pressure sensors.

pH

When selecting **ISE1 pH**, you will be given the choice of 1-point, 2-point, or 3-point calibrations.

Select the **1-point** option only if you are adjusting a previous calibration. If a 2-point or 3-point calibration has been performed previously, you can adjust the calibration by carrying out a one point calibration. Immerse the sonde in a buffer of known pH value and press **Enter.** You will be prompted to type in the pH value of the solution.

NOTE: The actual pH value of all buffers is somewhat variable with temperature and that the correct value from the bottle label for your calibration temperature should be entered for maximum accuracy. For example, the pH of YSI "pH 7 Buffer" is 7.00 at 25 C, but 7.02 at 20 C.

After inputting the proper pH value for your calibration temperature, press **Enter** again, and the screen will display real-time readings that will allow you to determine when the pH and temperature readings have stabilized. Pressing **Enter** will confirm the calibration. Then, as instructed, press **Enter** again to return to the Calibrate menu. This calibration procedure adjusts only the pH offset and leaves the previously determined slope unaltered.

Select the **2-point** option to calibrate the pH probe using only two calibration standards. In this procedure, the pH sensor is calibrated using a pH 7 buffer and a pH 10 or pH 4 buffer depending on your environmental water. A two point calibration procedure (as opposed to a 3-point procedure) can save time if the pH of the media being monitored is known to be either basic or acidic. For example, if the pH of a pond is known to vary between 5.5 and 7, a two-point calibration with pH 7 and pH 4 buffers is appropriate. Three point calibration with an additional pH 10 buffer will not increase the accuracy of this measurement since the pH is not within this higher range.

To begin the calibration, immerse the sonde in one of the buffers and enter the actual pH value depending on your calibration temperature. Press **Enter**, and the screen will display real-time readings that will allow you to determine when the pH sensor has stabilized. Pressing **Enter** will confirm the calibration. Following the instructions on the screen, place the sonde in the second pH buffer, input the pH value, press **Enter**, and view the stabilization of the values on the screen in real time. After the readings have stabilized, press **Enter** to confirm the calibration. Then, as instructed, press **Enter** again to return to the Calibrate menu.

Select the **3-point** option to calibrate the pH probe using three calibration solutions. In this procedure, the pH sensor is calibrated with a pH 7 buffer and two additional buffers. The 3-point calibration method assures maximum accuracy when the pH of the media to be monitored cannot be anticipated. The procedure for this calibration is the same as for a 2-point calibration, but the software will prompt you to select a third pH buffer to complete the 3-point procedure.

ORP

Select **ISE2 ORP** to calibrate the ORP sensor. Immerse the sonde in a solution with a known oxidation reduction potential value (we recommend Zobell solution) and press **Enter.** You will be prompted to enter the ORP value of the solution. Press **Enter**, and monitor the stabilization of the ORP and temperature readings. After no changes occur for approximately 30 seconds, press **Enter** to confirm the calibration. Then, as instructed, press **Enter** again to return to the Calibrate menu.

AMMONIUM

When selecting **ISE3-NH4+,** you will be given the choice of 1-point, 2-point, or 3-point calibrations for your ammonium (NH_4^+) sensor.

Select the **1-point** option only if you are adjusting a previous calibration. If a 2-point or 3-point calibration has been performed previously, you can adjust the calibration by doing a one point calibration. Immerse the sonde in any solution of known ammonium concentration and press **Enter.** You will be prompted to type in the NH_4^+ value (in mg/L of NH_4-N) of the solution you are using. Press **Enter** again, and the screen will display real-time readings that will allow you to determine when the $NH4^+$ readings have stabilized. Pressing **Enter** will confirm the calibration.

Select the **2-point** option to calibrate the NH_4^+ probe using only two calibration standards that are both at approximately the temperature of your environmental sample. In this procedure, the NH_4^+ sensor is usually calibrated using solutions that contain 1 and 100 mg/L of NH_4-N . Be certain that the calibration solution and sensor are thermally equilibrated prior to entering NH_4^+ values.

To begin the calibration immerse the sonde in the 1 mg/L standard, press **Enter**, input the NH_4-N value, and again press **Enter.** The screen will display real-time readings that will allow you to determine when the sensor has stabilized. Pressing **Enter** will confirm the first calibration. Following the instructions on the screen, place the sonde in the second NH_4^+ standard, press **Enter**, input the correct concentration value, again press **Enter**, and view the stabilization of the values on the screen in real time. After the readings have stabilized, press **Enter** to confirm the calibration. Then, as instructed, press any key to return to the Calibrate menu.

Select the **3-point** option to calibrate the NH_4^+ probe using three calibration solutions, two at ambient temperature and one at a temperature significantly different from ambient. The 3-point calibration method should be used to assure maximum accuracy when the temperature of the media to be monitored cannot be anticipated. The procedure for this calibration is the same as for a 2-point calibration, but the software will prompt you to place the sonde in the additional solution to complete the 3-point procedure. Be certain that the calibration solution and sensor are thermally equilibrated prior to proceeding with the calibration. The recommended order of calibration standards is (1) 100 mg/L standard at ambient temperature, (2) 1 mg/L standard at ambient temperature, and (3) 1 mg/L standard at a different temperature (usually lower) than ambient. For best results, insure a temperature difference of at least 10 C° between the two 1 mg/L standards.

NOTE: YSI strongly recommends the use of the 3-point protocol to ensure the best possible performance from all ISE sensors (ammonium, nitrate, and chloride)

NITRATE

When selecting **ISE4 NO3**, you will be given the choice of 1-point, 2-point, or 3-point calibrations for your nitrate (NO_3^-) sensor. The procedure is identical to that for the ammonium sensor, except that the calibrant values are in mg/L of NO_3-N instead of NH_4-N.

NOTE: YSI strongly recommends the use of the 3-point protocol to ensure the best possible performance from all ISE sensors (ammonium, nitrate, and chloride)

CHLORIDE

When selecting **ISE5-CL-**, you will be given the choice of 1-point, 2-point, or 3-point calibrations for your chloride (Cl^-) sensor. The procedure is identical to that for the ammonium sensor, except that the calibrant values are in mg/L of Cl instead of NH_4-N. IMPORTANT: We recommend that the user employ standards for chloride that are 10 times greater than for ammonium and nitrate. Thus, the low calibration value should be 10 mg/L and the high calibration value should be 1000 mg/L Cl-. The difference is due to the fact that the effect of contamination of standards from inadvertent leakage of chloride ion from either the DO probe or the reference junction of the pH probe will be less significant at higher concentrations.

NOTE: YSI strongly recommends the use of the 3-point protocol to ensure the best possible performance from all ISE sensors (ammonium, nitrate, and chloride)

OPTIC TURBIDITY

NOTE: Before calibrating your 6026 or 6136 turbidity sensor, pay particular attention to the following cautions:

- To properly calibrate YSI turbidity sensors, you MUST use standards that have been prepared according to details in *Standard Methods for the Treatment of Water and Wastewater (Section 2130 B)*. Acceptable standards include (a) formazin prepared according to *Standard Methods*; (b) dilutions of 4000 NTU formazin concentrate purchased from Hach; (c) Hach StablCal™ standards in various NTU denominations; and (d) AMCO-AEPA standards prepared specifically for the 6026 and 6136 by either YSI or approved vendors who are listed on the YSI website (www.ysi.com). STANDARDS FROM OTHER VENDORS ARE **NOT** APPROVED FOR THE YSI TURBIDITY SYSTEM AND THEIR USE WILL LIKELY RESULT IN BOTH CALIBRATION ERRORS AND INCORRECT FIELD READINGS.

- For AMCO-AEPA standards, the value entered by the user during the calibration protocol is DIFFERENT depending on which sensor (6026 or 6136) is being calibrated. This reflects the empirically determined fact that 6026 and 6136 sensors that have been calibrated to the same value in the primary standard formazin, will have different responses in suspensions of the AEPA-AMCO beads. This effect is likely due to the larger optical cell volume of the 6136. Thus, for example, the label of the YSI 6073 turbidity standard bottle indicates that the value of the standard is **100 NTU when used for calibration of the 6026 sensor, but 126 NTU when used to calibrate the 6136.** Note that the phenomenon of a sensor-specific formazin/AEPA-AMCO ratio is well known for sensors other than the 6026 and 6136.

- The details below are relevant to the calibration of both turbidity sensors offered by YSI – 6026 and 6136. However, to calibrate a 6136 sensor, you should have Version 2.16 or later installed in your sonde.

- If you are calibrating a 6136 turbidity sensor you MUST use either a black bottomed calibration cup or laboratory glassware with the probe guard installed for the calibration. See Section 2.6.1 above for details. Failure to carry out the calibration properly can result in inaccurate readings, particularly water of very low turbidity.

- Before proceeding with the calibration, be certain that the probe compartment of the sonde has been cleaned and is free of debris. Solid particles from this source, particularly those carried over from past deployments, will contaminate the standards during your calibration protocol and cause either calibration errors and/or inaccurate field data.

When selecting **Optic X -6026-Turbidity (or 6136-Turbidity),** there will be a choice of 1-point, 2-point, or 3-point calibrations for your turbidity sensor.

The **1-point** option is normally used to zero the turbidity probe in 0 NTU standard. Place the sonde in clear water (deionized or distilled) with no suspended solids, and input 0 NTU at the screen prompt. Press **Enter** and the screen will display real-time readings that will allow you to determine when the turbidity readings have stabilized. Press **Enter** after the readings have stabilized to confirm the calibration and zero the sensor. Then, as instructed, press any key to return to the Calibrate menu.

Select the **2-point** option to calibrate the turbidity probe using only two calibration standards. In this case, one of the standards must be clear water (0 NTU) and the other should be in the range of known turbidity for the water to be monitored. For example, if the water to be evaluated is known to be low in turbidity, an appropriate choice of standards might be 0 and 10 NTU (6026) or 0 and 12.7 NTU (6136). However, for general purpose measurements an appropriate choice of standards is usually 0 and 100 NTU (6026) or 0 and 126 NTU (6136).

To begin the calibration, immerse the sonde in the 0 NTU standard, as instructed, and press **Enter.** It is mandatory that the 0 NTU standard be calibrated first. The screen will display real-time readings that will allow you to determine when the readings have stabilized. Pressing **Enter** will confirm the first calibration. Following the instructions on the screen, place the sonde in the second turbidity standard, input the correct turbidity value in NTU, press **Enter**, and view the stabilization of the values on the screen in real-time. After the readings have stabilized, press **Enter** to confirm the calibration. Then, as instructed, press any key to return to the Calibrate menu.

Select the **3-point** option for maximum accuracy over the entire range of 0 to 1000 NTU. As for the 2-point procedure, one of the standards must be 0 NTU. Because of the linearity characteristics of the sensors, we recommend that the other two standards have turbidity values of 100 and 1000 NTU. However, the user can select any values that are deemed appropriate. The procedure for this calibration is the same as for a 2-point calibration, but the software will prompt you to place the sonde in the additional solution to complete the 3-point procedure.

For all turbidity calibration procedures, be certain that the standard and sensor are thermally equilibrated prior to proceeding with the calibration.

For further information related to setting up, calibrating and running turbidity measurements, refer to **Appendix E, Turbidity Measurements**.

OPTIC CHLOROPHYLL

When selecting **Optic X - Chlorophyll,** there will be a choice of zeroing the relative fluorescence unit parameter (**Chl RFU Zero**) or calibrating with actual chlorophyll standards (**µg/L 1-point, 2-point, or 3-point**).

If you have selected **Chl RFU** as a parameter in the **Report** menu, the sonde will report only relative values of fluorescence in the sample being measured. These values could then be converted into actual chlorophyll concentrations in µg/L by using a post-calibration procedure, after the chlorophyll content of grab-samples taken during a sampling or monitoring study has been analyzed in a laboratory. This determination can involve conducting the extractive analysis procedure described for chlorophyll in *Methods for the Examination of Water and Wastewater* or by carrying out an *in situ* measurement of chlorophyll using a commercial benchtop fluorometer.

The **Chl RFU Zero** option is used to zero the fluorescence probe in a medium that is chlorophyll-free. Place the sonde in clear water, and input 0 at the screen prompt. Press **Enter** and the screen will display real-time readings that will allow you to determine when the fluorescence readings have stabilized. Press

Enter after the readings have stabilized to confirm the calibration and zero the sensor. Then, press any key to return to the **Calibrate** menu.

If you select **Chl µg/L** in the initial calibration routine, there will be a choice of 1-point, 2-point, or 3-point options. The 1-point selection is normally used to zero the fluorescence probe in a medium that is chlorophyll-free. If you use this method, you will either choose to utilize the default sensitivity for chlorophyll in the sonde software or to update a previous multipoint calibration. Usually you will place the sonde in clear water, and input 0 µg/L at the screen prompt. After pressing **Enter** the screen will display real-time readings allowing you to determine when the chlorophyll readings have stabilized. Press **Enter** after the readings have stabilized to confirm the calibration and zero the sensor. Then, as instructed, press any key to return to the Calibrate menu.

Note: For the 2-point and 3-point calibrations described below, standards of known fluorescence are required. Two general types of standards can be used: (a) phytoplankton suspensions of known chlorophyll content, and (b) dye solutions whose fluorescence can be correlated to that of chlorophyll. The user is responsible for determining the chlorophyll content of phytoplankton suspensions, either by employing the extractive analysis procedure described in *Standard Methods for the Examination of Water and Wastewater,* or by analyzing the suspension *in situ* using a laboratory fluorometer. See **Section 5.14**, **Principles of Operation** and **Appendix I, Chlorophyll Measurements** of this manual for more information about chlorophyll standards.

Select the **2-point** option to calibrate the chlorophyll probe using only two calibration standards. In this case, one of the standards must be clear water (0 µg/L) and the other should be in the range of a known chlorophyll content of the water to be monitored. For example, if the water to be evaluated is known to be low in chlorophyll, an appropriate choice of standards might be 0 and 10 µg/L. However, for general-purpose measurements an appropriate choice of standards is usually approximately 100 µg/L.

To begin the calibration, immerse the sonde in the 0 µg/L standard, as instructed, and press **Enter.** It is mandatory that the 0 µg/L standard be calibrated first. The screen will display real-time readings that will allow you to determine when the readings have stabilized. Pressing **Enter** will confirm the first calibration. Following the instructions on the screen, place the sonde in the second chlorophyll standard, input the correct value in µg/L, press **Enter**, and view the stabilization of the values on the screen in real-time. After the readings have stabilized, press **Enter** to confirm the calibration. Then, as instructed, press any key to return to the **Calibrate** menu.

Select the **3-point** option for maximum accuracy over the entire range of 0 to 400 µg/L. As with the 2-point procedure, one of the standards must be 0 µg/L. The user can select any values for the second and third standards that are deemed appropriate. The procedure for this calibration is the same as for a 2-point calibration, but the software will prompt you to place the sonde in the additional solution to complete the 3-point procedure.

For all chlorophyll calibration procedures, be certain that the standard and sensor are thermally equilibrated prior to proceeding with the calibration

CAUTION: To be assured of the accuracy for field measurements made with your chlorophyll sensor, you must either initially calibrate the sensor using a phytoplankton suspension of known chlorophyll content or post calibrate your sensor in a spreadsheet by comparing the fluorescence values obtained in field studies with those obtained by laboratory analysis for chlorophyll on grab samples collected during the field study. The use of chemical dye standards for "calibration" of the sensor may not result in accurate correlation between fluorescence and actual chlorophyll readings and is designed primarily to evaluate the sensor for drift. See **Section 5.14, Principles of Operation** and **Appendix I. Chlorophyll Measurements** for more information on the proper calibration of your chlorophyll sensor.

OPTIC BGA-PC

To calibrate your 6131 Blue-Green Algae-Phycocyanin (BGA-PC) sensor, select **BGA-PC cells/mL** in the initial calibration routine. There will be a choice of 1-point or 2-point options. The 1-point selection is normally used to zero the fluorescence probe in a medium that is BGA-free. If you use this method, you will either choose to utilize the default sensitivity for BGA-PC in the sonde software or to update a previous 2-point calibration. Usually you will place the sonde in clear water, and input 0 µg/L at the screen prompt. After pressing **Enter** the screen will display real-time readings allowing you to determine when the BGA-PC readings have stabilized. Press **Enter** after the readings have stabilized to confirm the calibration and zero the sensor. Then, as instructed, press any key to return to the **Calibrate** menu.

Note: For the 2-point calibration described below, a standard of known fluorescence is required. Two general types of standards can be used: (a) phytoplankton suspensions of known BGA-PC content, and (b) dye solutions whose fluorescence can be correlated to that of BGA-PC. The user is responsible for determining the BGA-PC content of algal suspensions by using standard cell counting techniques. See **Section 5.16**, **Principles of Operation** of this manual for more information about BGA-PC standards.

Select the **2-point** option to calibrate the BGA-PC probe using two calibration standards. In this case, one of the standards must be clear water (0 µg/L) and the other should be in the range of the suspected BGA-PC content at the environmental site.

To begin the calibration, immerse the sonde in the 0 cells/mL standard, as instructed, and press **Enter.** It is mandatory that the 0 cells/mL standard be calibrated first. The screen will display real-time readings that will allow you to determine when the readings have stabilized. Pressing **Enter** will confirm the first calibration. Following the instructions on the screen, place the sonde in the second BGA-PC standard, input the correct value in cells/mL, press **Enter**, and view the stabilization of the values on the screen in real-time. After the readings have stabilized, press **Enter** to confirm the calibration. Then, as instructed, press any key to return to the **Calibrate** menu.

For all BGA-PC calibration procedures, be certain that the standard and sensor are thermally equilibrated prior to proceeding with the calibration

CAUTION: To be assured of the accuracy for field measurements made with your BGA-PC sensor, you must either initially calibrate the sensor using an algal suspension of known BGA-PC content or post calibrate your sensor in a spreadsheet by comparing the fluorescence values obtained in field studies with those obtained by laboratory analysis for chlorophyll on grab samples collected during the field study. The use of chemical dye standards for "calibration" of the sensor may not result in accurate correlation between fluorescence and actual BGA-PC readings and is designed primarily to evaluate the sensor for drift. See **Section 5.16. Principles of Operation** for more information on the proper calibration of your BGA-PC sensor.

OPTIC BGA-PE

To calibrate your 6132 Blue-Green Algae-Phycoerythrin (BGA-PE) sensor, select **BGA-PE cells/mL** in the initial calibration routine. There will be a choice of 1-point or 2-point options. The 1-point selection is normally used to zero the fluorescence probe in a medium that is BGA-free. If you use this method, you will either choose to utilize the default sensitivity for BGA-PE in the sonde software or to update a previous 2-point calibration. Usually you will place the sonde in clear water, and input 0 µg/L at the screen prompt. After pressing **Enter** the screen will display real-time readings allowing you to determine when the BGA-PE readings have stabilized. Press **Enter** after the readings have stabilized to confirm the calibration and zero the sensor. Then, as instructed, press any key to return to the **Calibrate** menu.

Note: For the 2-point calibration described below, a standard of known fluorescence is required. Two general types of standards can be used: (a) phytoplankton suspensions of known BGA-PE content, and (b) dye solutions whose fluorescence can be correlated to that of BGA-PE. The user is responsible for

determining the BGA-PC content of algal suspensions by using standard cell counting techniques. See **Section 5.17**, **Principles of Operation** of this manual for more information about BGA-PC standards.

Select the **2-point** option to calibrate the BGA-PE probe using two calibration standards. In this case, one of the standards must be clear water (0 cells/mL) and the other should be in the range of the suspected BGA-PC content at the environmental site.

To begin the calibration, immerse the sonde in the 0 µg/L standard, as instructed, and press **Enter.** It is mandatory that the 0 cells/mL standard be calibrated first. The screen will display real-time readings that will allow you to determine when the readings have stabilized. Pressing **Enter** will confirm the first calibration. Following the instructions on the screen, place the sonde in the second BGA-PC standard, input the correct value in cells/mL, press **Enter**, and view the stabilization of the values on the screen in real-time. After the readings have stabilized, press **Enter** to confirm the calibration. Then, as instructed, press any key to return to the **Calibrate** menu.

For all BGA-PE calibration procedures, be certain that the standard and sensor are thermally equilibrated prior to proceeding with the calibration

CAUTION: To be assured of the accuracy for field measurements made with your BGA-PE sensor, you must either initially calibrate the sensor using an algal suspension of known BGA-PE content or post calibrate your sensor in a spreadsheet by comparing the fluorescence values obtained in field studies with those obtained by laboratory analysis for chlorophyll on grab samples collected during the field study. The use of chemical dye standards for "calibration" of the sensor may not result in accurate correlation between fluorescence and actual BGA-PE readings and is designed primarily to evaluate the sensor for drift. See **Section 5.17. Principles of Operation** for more information on the proper calibration of your chlorophyll sensor.

OPTIC RHODAMINE WT

When selecting **Rhodamine,** there will be a choice of 1-point, 2-point, or 3-point calibrations for your rhodamine WT sensor.

The **1-point** option is normally used to zero the rhodamine probe in 0 ug/L standard. Place the sonde in clear water with no suspended solids, and input 0 ug/L at the screen prompt. Press **Enter** and the screen will display real-time readings that will allow you to determine when the rhodamine readings have stabilized. Press **Enter** after the readings have stabilized to confirm the calibration and zero the sensor. Then, as instructed, press any key to return to the Calibrate menu.

Select the **2-point** option to calibrate the rhodamine probe using only two calibration standards. In this case, one of the standards must be clear water (0 ug/L) and the other should be in the range of the predicted rhodamine concentration projected for the study. For general purpose measurements an appropriate choice of standards is usually 0 and 100 ug/L.

To begin the calibration, immerse the sonde in the 0 ug/L standard, as instructed, and press **Enter.** It is mandatory that the 0ug/L standard be calibrated first. The screen will display real-time readings that will allow you to determine when the readings have stabilized. Pressing **Enter** will confirm the first calibration. Following the instructions on the screen, place the sonde in the second rhodamine standard, input the correct rhodamine value in ug/L, press **Enter**, and view the stabilization of the values on the screen in real-time. After the readings have stabilized, press **Enter** to confirm the calibration. Then, as instructed, press any key to return to the Calibrate menu.

Select the **3-point** option for maximum accuracy over the entire range of 0 to 200 ug/L. As for the 2-point procedure, one of the standards must be 0 NTU. The procedure for this calibration is the same as for a 2-

point calibration, but the software will prompt you to place the sonde in the additional solution to complete the 3-point procedure.

For all rhodamine calibration procedures, be certain that the standard and sensor are thermally equilibrated prior to proceeding with the calibration.

REESTABILISHING DEFAULT CALIBRATION – "UNCAL" COMMAND

If, for any reason, you want to return to the factory default settings (slope and offset) for any parameter, follow the instructions below:

- Activate any calibration screen (1-point, 2-point, or 3-point) where a numerical entry is requested. In the example below, a 2-point turbidity calibration was selected.
- Instead of entering a numeric value, type the word "uncal" and press **Enter**.
- An "uncal" entry at any calibration prompt will reset both slope and offset for this parameter to the factory default settings.

```
-----Turbidity calibration--
1-1 point
2-2 point
3-3 point

Select option (0 for previous
menu): 2

Enter 1st Turbid NTU:uncal
```

NOTE: When using the 650 MDS as the sonde interface device, the "uncal" operation is performed by holding the **Enter** key down and then pressing the **Esc** key. See **Section 3** of this manual for more details.

CALIBRATION RECORD – THE GLP FILE

When any sensor is calibrated, 6-series sondes will automatically create a file in sonde memory that provides details of the calibration coefficients before and after the calibration. The file will have a .glp extension and will have the Circuit Board Serial # as the default filename. The file can be viewed by following the path File|Directory|View from the Main sonde menu.

```
-------------File details--------------
1-View file
2-File:00003001.glp
3-Samples:     39
4-Bytes:    790
```

```
------------------File-----------------
1-Directory      4-View file
2-Upload         5-Quick view file
3-Quick Upload   6-Delete all files


Select option (0 for previous menu): 1
```

```
Filename    Samples
1-BRIDGE1.dat      19
2-BRIDGE2.dat      27
3-UPLAKE.dat       33
4-CLRLAKE2.dat    167
5-DWNLAKE2.dat     31
6 - 00003001.glp    39
```

Pressing 1-View file will show the calibration record for the sonde. An example is shown below:

```
m/d/y hh:mm:ss      S/N                 Type    Value
08/23/2001 17:07:50 00003001    Conductivity gain 1.000000
08/23/2001 17:07:50 00003001             DO gain 1.000000
08/23/2001 17:07:50 00003001        DO local gain 1.000000
08/23/2001 17:07:50 00003001  pH gain (pH-7)*K/mV -5.05833
08/23/2001 17:07:50 00003001   pH offset (pH-7)*K 0.000000
08/23/2001 17:07:50 00003001        ORP offset mV 0.000000
08/23/2001 17:07:50 00003001         TDS constant 0.650000
08/23/2001 17:07:50 00003001          Turb Offset 0.000000
08/23/2001 17:07:50 00003001             Turb A1 500.0000
08/23/2001 17:07:50 00003001             Turb M1 500.0000
08/23/2001 17:07:50 00003001             Turb A2 1000.000
08/23/2001 17:07:50 00003001             Turb M2 1000.000
08/23/2001 17:07:50 00003001           Chl Offset 0.000000
08/23/2001 17:07:50 00003001               Chl A1 100.0000
08/23/2001 17:07:50 00003001               Chl M1 100.0000
08/23/2001 17:07:50 00003001               Chl A2 200.0000
08/23/2001 17:07:50 00003001               Chl M2 200.0000
08/23/2001 17:07:50 00003001         Fluor Offset 0.000000
08/23/2001 17:07:50 00003001             DO gain 1.103424
08/23/2001 17:07:50 00003001        DO local gain 1.000000
```

The data in the display shows a new sonde (Circuit Board # 00003001) which has just had its dissolved oxygen sensor calibrated. Note that the initial values for all parameters are the default settings. Only the last two entries (DO gain and DO local gain) have been affected by the calibration of the oxygen sensor. If the conductivity sensor is now calibrated, the new conductivity gain value is now automatically appended to the record as shown below:

```
m/d/y hh:mm:ss      S/N                 Type    Value
08/23/2001 17:07:50 00003001    Conductivity gain 1.000000
08/23/2001 17:07:50 00003001             DO gain 1.000000
08/23/2001 17:07:50 00003001        DO local gain 1.000000
08/23/2001 17:07:50 00003001  pH gain (pH-7)*K/mV -5.05833
08/23/2001 17:07:50 00003001   pH offset (pH-7)*K 0.000000
08/23/2001 17:07:50 00003001        ORP offset mV 0.000000
08/23/2001 17:07:50 00003001         TDS constant 0.650000
08/23/2001 17:07:50 00003001          Turb Offset 0.000000
08/23/2001 17:07:50 00003001             Turb A1 500.0000
08/23/2001 17:07:50 00003001             Turb M1 500.0000
08/23/2001 17:07:50 00003001             Turb A2 1000.000
08/23/2001 17:07:50 00003001             Turb M2 1000.000
08/23/2001 17:07:50 00003001           Chl Offset 0.000000
08/23/2001 17:07:50 00003001               Chl A1 100.0000
08/23/2001 17:07:50 00003001               Chl M1 100.0000
08/23/2001 17:07:50 00003001               Chl A2 200.0000
08/23/2001 17:07:50 00003001               Chl M2 200.0000
08/23/2001 17:07:50 00003001         Fluor Offset 0.000000
08/23/2001 17:07:50 00003001             DO gain 1.103424
08/23/2001 17:07:50 00003001        DO local gain 1.000000
08/23/2001 17:23:13 00003001    Conductivity gain 0.979114
```

Note that the default value of the conductivity "Value" is 1.00 in the .glp format shown above. This relative number is equivalent to a real cell constant of 5.00 which is provided in the **Advanced|Cal**

Constants and is described in Section 2.9.8. All other values in the .glp file are equivalent to those shown in the **Advanced|Cal Constants** menu.

CAUTION: Calibration records for all sensors will automatically be stored in the .glp file until the **Delete All Files** command is used from the **File** menu. However, if the Delete command is issued, all files, including the .glp (calibration record) file will be lost. Therefore, it is extremely important to remember to upload the .glp file to a PC or a 650 Display/Logger prior to deleting files from the sonde. See Section 2.9.3 for instructions on the upload and viewing of the .glp file.

2.9.3 FILE

Selections from the File menu allow the user to access data that has been stored in the sonde flash disk memory. Select **3-File** from the Main menu.

```
------------------File-----------------
1-Directory      4-View file
2-Upload         5-Quick view file
3-Quick Upload   6-Delete all files


Select option (0 for previous menu): 1
```

Select **1-Directory** to view all files currently stored in sonde flash disk memory. The screen below shows 5 files of varying sizes. To examine the details of each file, press the associated number (e.g., 4 for CLRLAKE2.dat) and an additional screen will be displayed as shown below that quantifies the time of the deployment, the sample interval, and the site where the sonde was used. In addition, the data in the file can be viewed by using the **1-View file** command

```
 Filename    Samples
1-BRIDGE1.dat      19
2-BRIDGE2.dat      27
3-UPLAKE.dat       33
4-CLRLAKE2.dat    167
5-DWNLAKE2.dat     31
6-00003001.glp      3

Select option (0 for previous menu): 4
```

```
-------------File details--------
------
1-View file
2-File:CLRLAKE2.dat
3-Samples:    167
4-Bytes:   4421
5-First:08/23/2001
6-First:08:33:40
7-Last :08/23/2001
8-Last :09:04:20
9-Interval:00:00:10
A-Site:Clear Lake
```

Select **2-Upload** to view file lists in memory (same as shown above) and then upload the data to a PC or to the YSI 650 MDS Display/Logger. The uploaded data can then be processed with YSI EcoWatch for Windows to allow data manipulation and to easily generate reports, plots, and statistics.

Three formats for file transfer are available: PC6000, Comma & Quote Delimited, and ASCII text.

- **PC6000** format will transfer the data so that it will be compatible with the EcoWatch for Windows (supplied with your sonde) software package. YSI recommends data transfer in this format since it is significantly more rapid than other transfer options. If this data is required in Comma & Quote Delimited and/or ASCII formats, the user can quickly generate data in these formats using the Export function in EcoWatch for Windows.

- **Comma & Quote Delimited** format is commonly used to generate files that can be imported into spreadsheet software in your PC, where you can perform custom data analysis. A comma is still the delimiter, but the radix is corrected to a period. In most cases you should set the Page Length to 0 before using this type of upload format. See the Windows Help section in EcoWatch for information on setting the page length.

- **ASCII Text** is another alternative to transferring data directly to your computer into spreadsheet or other PC-based software.

Prior to upload, a "Time window" display appears to allow you the option to select portions of the logged data to upload. You may select **1-Proceed** to upload all data logged from the dates and times shown.

```
--------------Time window--------------
1-Proceed
2-Start date=07/17/96
3-Start time=12:00:00
4-Stop  date=07/31/96
5-Stop  time=12:00:00

Select option (0 for previous menu):
```

Select **1-Proceed.** Choose the appropriate file transfer protocol. A status box will appear in the lower right quadrant of the screen. Verification of a successful transfer is indicated when all of the requested data are transferred.

```
---------------File type---------------
1-PC6000
2-Comma & ' ' Delimited
3-ASCII Text

Select option (0 for previous menu):
```

Press **0** or **Esc** to return to the File menu.

When you select the **3–Quick Upload** option, the same operation as **2-Upload** is performed, except that only the most recent flash disk file is uploaded and it is uploaded in its entirety. You still must choose the transfer format from the three options provided.

Select **4-View File** to examine the data in any file currently stored in sonde flash disk memory. You will first view the same screen as viewed in the Directory menu. From this menu choose the file of interest, then, using the Time window menu, choose the dates and/or times of interest. If you choose dates or times that are not within the designated start and stop times, no data will be displayed.

You may choose the entire file. Use the **Space Bar** to alternately stop and to resume scrolling. Use the **Esc** key to cancel the view.

Select the **5–Quick View File** option to view the last page of data from the last data file in sonde memory. This feature is particularly useful in quickly reviewing recently acquired data at field sites so that system performance can be assessed.

Select **6–Delete all files** to IRREVERSIBLY remove all files from the sonde memory (INCLUDING the .glp file that may contain valuable calibration data). It is critical not to use this option until all relevant data from sonde memory has been transferred to your computer via one of the upload options. There is a verification screen that appears, so that pressing the 6 key does not immediately delete all files at this point.

NOTE: By choosing the Delete function **only** .dat and .glp files will be erased. Calibration data for all sensors installed and calibrated on the sonde will not be deleted.

The management of the .glp calibration record file that is automatically stored in sonde memory and is described in Section 2.9.2 above is similar to that for data files. However, there are some differences in the upload procedure of which the user should be aware. When uploading a .glp file there will be a choice of three upload protocols as shown below:

```
---------------File type---------------
1-Binary
2-Comma & '' '' Delimited
3-ASCII Text

Select option (0 for previous menu):
```

The binary upload choice should ONLY be used when uploading the .glp file to a 650 Display/Logger; if the binary protocol is used in a direct upload to PC, a .glp file will indeed be transferred, but it will not be possible to open it using the current YSI software or any other text editor. Thus, during a direct transfer of the .glp file to your PC, either the CDF or ASCII formats should be used. The result will be the conversion of the file with a .glp extension in the sonde to one with a .txt extension which is now stored in the ECOWWIN\DATA subdirectory of your PC. For example, the file 00003001.glp in the sonde will become 00003001.txt on transfer to PC and the file will be in a format which can easily be viewed and edited using Notepad or other word processing software.

2.9.4 STATUS

Select **4-Status** from the Sonde Main menu to obtain general information about the sonde and its setup.

```
-----------------Status----------------
1-Version:3.01
2-Date=07/22/96
3-Time=09:04:28
4-Bat volts: 9.0
5-Bat life 21.2 days
6-Free bytes:129792
7-Logging:Inactive

Select option (0 for previous menu):
```

- **1-Version** identifies the specific version of sonde software loaded in the sonde. This number is especially useful if you are calling YSI Technical Support. It may also be useful to you if you are comparing 2 or more sondes purchased at different times.

- Select **2-Date and 3-Time** to display current date and time in 24-hour format. This is not a "live" display, but may be updated by pressing the 2 or 3 key again. This may be useful for viewing or setting real time. You may correct date or time from this submenu, by entering the corrected date or time as described in System setup. However, you cannot alter date format from this screen.

- In options **4, 5, and 6**, you can view battery voltage, battery life, and available free memory in your sonde to help you evaluate whether the current setup is appropriate to complete an active logging or to begin a study in which you have defined your logging parameters. If you press key 4, 5 or 6 before you exit this screen, it may change, since this triggers the Status screen to update information. Note that no battery information will appear for the 600R, 600QS, 600XL, 6820V2-1, and 600 OMS V2-1(nonbattery version) sondes.

- **7-Logging** provides one of two messages, active or inactive, indicating whether your sonde is in the <u>unattended</u> logging mode. This logging status indicator is not relevant to logging in the discrete mode, since there is no way to enter the Status screen without stopping discrete logging.

Press **0** or **Esc** to exit the Status screen and return to Main menu.

2.9.5 SYSTEM

Select **5-System** from the Sonde Main menu to set the date and time, customize the sonde communication protocol, adjust how information appears on the screen, and enter an instrument identification number and a GLP file designation.

```
1-Date & time
2-Comm setup
3-Page length=25
4-Instrument ID=YSI Sonde
5-Circuit board SN:00003001
6-GLP filename=00003001
7-SDI-12 address=0

Select option (0 for previous menu):
```

Select **Date & time.**

```
-----------Date & time setup-----------
1-(*)m/d/y          4-( )4 digit year
2-( )d/m/y          5-Date=08/11/98
3-( )y/m/d          6-Time=11:12:30

Select option (0 for previous menu):
```

Press **4** and **5** to activate the date and time functions. Pay particular attention to the date format that you have chosen when entering date. Use the 24-hour clock format for entering time. Option **4- ( ) 4 digit** year may be chosen to have the date appear with a two or four digit year.

Press **0** or **Esc** to return the System Setup menu.

Select **2-Comm setup** From the System Setup menu.

```
---------------Comm setup-------------
1-(*)Auto baud      5-( )2400 baud
2-( )300 baud       6-( )4800 baud
3-( )600 baud       7-(*)9600 baud
4-( )1200 baud

Select option (0 for previous menu): 0
```

The default is 9600, but you may change it to match your host communication interface protocol by typing in the corresponding number, 1 through 7. An asterisk confirms the selection. Auto baud may be selected along with any of the choices. The Auto baud option allows the sonde to recognize and adjust to the received characters and we recommend that it is activated.

NOTE: If you change the baud rate, exit the sonde interaction and immediately change the baud rate in EcoWatch for Windows, Comm Settings. If you do not adjust the baud rate in the PC software, the sonde will not be able to communicate with the computer or any display/logger and your system will appear to be "locked-up."

Select **3-Page length** from the System Setup menu and press **Enter**. This will allow you to control how many lines of data are sent to your display before a new header is shown. The smaller the page number, the fewer the lines of data will be transmitted to your display between headers. However, if you set the page length to zero (0), only the initial header will be displayed. In many cases, a page length of zero is the preferred configuration if you choose to upload your data in an ASCII or CDF format. See **Section 2.9.3, File Menu,** for more details.

NOTE: The header itself takes 4 lines. Therefore, if the page length is set to 25, there will be 21 lines of data and one header. Any page length less than 5 will result in no header being transmitted.

Select **4-Instrument ID** from the System setup menu to record the instrument ID number (usually the instrument serial number), and press **Enter**. A prompt will appear which will allow you to type in the serial number of your sonde. This will make sure that any data that is collected is associated with a particular sonde.

The **5-Circuit Board SN** entry shows the serial number of the PCB that is resident in your sonde (not the entire system as for Instrument ID). Unlike the **Instrument ID**, the user cannot change the **Circuit Board SN**.

Select **6-GLP filename** to enter a name for the file that is automatically generated and appended as you calibrate any of the sonde sensors. The default designation for the GLP file is the Circuit Board SN and this name can be retained if you wish. See section 2.9.3 for general information on the GLP file.

Select **7-SDI-12 address** from the System Setup menu to change the value. Input a number between 0 and 9 and then press **Enter** to confirm the selection. The SDI-12 default address is zero (0). This feature is fully described in **Section 7, Communication** and only utilized if the unit is to operate in a SDI-12 communication protocol network.

2.9.6 REPORT

The Report menu allows you to configure all reports displayed by the sonde software. You will be able to select which parameters and units of measure that are displayed during operation.

Select **6-Report** from the sonde Main menu. The following menu, <u>or a similar menu</u>, will be displayed. The parameters listed depend on both the sensors available and enabled on your sonde. Therefore your screen may not be identical to that shown below.

Select **Report** from the Main sonde menu to setup the report section. The Report Setup menu will be displayed.

```
-------------Report setup--------------
1-(*)Date           C-( )DOchrg
2-(*)Time hh:mm:ss  D-( )pH
3-(*)Temp C         E-( )pH mV
4-(*)SpCond uS/cm   F-(*)Orp mV
5-( )Cond           G-( )PAR1
6-( )Resist         H-( )PAR2
7-( )TDS            I-(*)Turbid+ NTU
8-( )Sal ppt        J-(*)Chl ug/L
9-(*)DOsat %        K-( )Chl RFU
A-(*)DOsat %Local   L-(*)Battery volts
B-( )DO mg/L

Select option (0 for previous menu):
```

The asterisks (*) that follow the numbers or letters indicate that the parameter will appear on all outputs and reports. To turn a parameter on or off type the number or letter, that corresponds to the parameter, after **Select option**. See **Appendix J** for instructions on activation of the parameter "DOsat %Local" and ODOsat %Local". The parameters "PAR1" and "PAR2" are associated with a special sonde equipped with a sensor for Photosynthetically Active Radiation (PAR) which can be purchased from the YSI Massachusetts. See **Section 9** of this manual for contact information and **Appendix K** for a brief description of the PAR system for potential users.

Note that the units of turbidity are automatically presented as "turbid NTU" if a 6026 sensor has been selected and "turbid+ NTU" if a 6136 sensor has been selected. The different designations are designed to differentiate the data from the two sensors types in later analysis.

For parameters with multiple unit options such as temperature, conductivity, specific conductance, resistivity and TDS, a submenu will appear as shown below, allowing selection of desired units for this parameter.

```
--------------Select units-------------
1-(*)NONE
2-( )Temp C
3-( )Temp F
4-( )Temp K

Select option (0 for previous menu): 2
```

After configuring your display with the desired parameters, press **Esc or 0** to return to the Main menu.

Even if all of the sensors are enabled, the measurements for those sensors will not appear on your display unless the parameter is selected in Report setup. In order for a specific parameter to show up on a report:

- The sensor must first be enabled (turned on).
- That parameter must be activated in the Report setup.

In the above example, if the appropriate sensors have been activated in the Sensor setup section, the following parameters will be displayed to the computer screen or captured to a computer or data collection platform when the sonde is sampling: Temperature in C, Specific Conductance in uS/cm, Dissolved

Oxygen in % air saturation, Dissolved Oxygen in mg/L, pH, ORP in millivolts, Turbidity in NTUs and Chlorophyll in ug/L. Date and time will also be displayed.

NOTE: Do not attempt to memorize or associate a number or letter with a particular parameter. The numbering scheme is dynamic and changes depending on the sensors which have been enabled.

The following list is a complete listing of the abbreviations utilized for the various parameters and units available in the Report setup menu.

Parameter	Description
Date	Day/Month/Year (format selectable)
Time	Hour:Minute:Second (24-hour clock format)
Temp C	Temperature in degrees Celsius
Temp F	Temperature in degrees Fahrenheit
Temp K	Temperature in degrees Kelvin
SpCond mS/cm	Specific Conductance in milliSiemens per centimeter
SpCond uS/cm	Specific Conductance in microSiemens per centimeter
Cond mS/cm	Conductivity in milliSiemens per centimeter
Cond uS/cm	Conductivity in microSiemens per centimeter
Resist MOhm*cm	Resistivity in MegaOhms * centimeter
Resist Kohm*cm	Resistivity in KiloOhms * centimeter
Resist Ohm*cm	Resistivity in Ohms * centimeter
TDS g/L	Total dissolved solids in grams per liter
TDS kg/L	Total dissolved solids in kilograms per liter
Sal ppt	Salinity in parts per thousand (set to local barometer at calibration)
DOsat %	Dissolved oxygen in % air saturation from Rapid Pulse Sensor
DOsat % Local	Dissolved oxygen in % air saturation (set to 100 % at calibration) from the Rapid Pulse sensor
DO mg/L	Dissolved oxygen in milligrams per liter from Rapid Pulse Sensor
DO chrg	Dissolved oxygen sensor charge from Rapid Pulse Sensor
ODOsat %	Dissolved oxygen in % air saturation from ROX Optical Sensor
ODOsat % Local	Dissolved oxygen in % air saturation (set to 100 % at calibration) from the ROX Optical Sensor
ODO mg/L	Dissolved oxygen in mg/L from ROX Optical Sensor
Press psia	Pressure in pounds per square inch absolute
Press psir	Pressure in pounds per square inch relative
Depth meters	Water column in meters
Depth feet	Water column in feet
pH	pH in standard units
pH mV	millivolts associated with the pH reading
Orp mV	Oxidation reduction potential value in millivolts
NH4+ N mg/L	Ammonium Nitrogen in milligrams/liter
NH4+ N mV	Ammonium Nitrogen in millivolt reading
NH3 N mg/L	Ammonia Nitrogen in milligrams/liter
NO3- N mg/L	Nitrate Nitrogen in milligrams/liter
NO3- N mV	Nitrate Nitrogen in millivolt reading
Cl- mg/L	Chloride in milligrams/liter
Cl- mV	Chloride in millivolt reading
Turbid NTU	Turbidity in nephelometric turbidity units from 6026 sensor
Turbid+ NTU	Turbidity in nephelometric turbidity units from 6136 sensor
Chl ug/L	Chlorophyll in micrograms/liter
Chl RFU	Relative fluorescence units for the chlorophyll sensor
BGA-PC cells/mL	Phycocyanin-Containing Blue-green Algae content in cells/mL
BGA-PC RFU	Relative fluorescence units for the BGA-PC sensor
BGA-PE cells/mL	Phycoerythrin-Containing Blue-green Algae content in cells/mL
BGA-PE RFU	Relative fluorescence units for the BGA-PE sensor
Rhod ug/L	Rhodamine WT in micrograms/liter

PAR1	Output from special photosynthetically active radiation sensor in mv or Photon Flux Density in umoles/sec/m2
PAR 2	Output from special photosynthetically active radiation sensor in mv or Photon Flux Density in umoles/sec/m2

2.9.7 SENSOR

The **Sensor** menu allows you to Enable or Disable (turn on or off) any available sensor and, in some cases, to select the port in which your sensor is installed.

From the Sonde Main menu select **7-Sensor** and the following display will appear.

```
------------Sensors enabled------------
1-(*)Time           7-( )ISE3 NONE
2-(*)Temperature    8-( )ISE4 NONE
3-(*)Conductivity   9-( )ISE5 NONE
4-(*)Dissolved Oxy  A-( )Optic T
5-(*)ISE1 pH        B-( )Optic C
6-(*)ISE2 Orp       C-(*)Battery

Select option (0 for previous menu):
```

Note that the exact appearance of this menu will vary depending upon the sensors available on your sonde.

When a particular sensor is active, an asterisk will appear in the parentheses associated with the selection. In this example the time, temperature, conductivity, dissolved oxygen, pH, ORP, and battery sensors are enabled. To disable a sensor, simply press the number of the active sensor or port, and the asterisk will disappear.

For the ISE and Optic selections, press the appropriate number, and then enable or disable the sensor using the submenu choices. Be certain that the appropriate sensor is “enabled” in the submenu according to the sonde bulkhead port in which it is physically installed. For example, if an ammonium sensor is placed in the port labeled “3” on the bulkhead, enable the sensor as ISE3 in the menu structure.

The following screen is the submenu selection structure for ISE3, ISE4 and ISE5.

```
--------------Select type--------------
1-( )ISE3 NH4+
2-( )ISE3 NO3-
3-( )ISE3 Cl-
4-( )ISE3 PAR1

Select option (0 for previous menu):
```

As noted above, the ISE3 PAR1 selection is used in a special instrument mated to a sensor for Photosynthetically Active Radiation that is available from Endeco/YSI. See **Section 9** for contact information and **Appendix K** for a brief description of the PAR system for potential users.

A submenu similar to that below will appear if any of the Optic options (T, C, B, or O) is chosen as a port for a particular optical sensor..

```
--------------Select type--------------
1-(*)Optic-T(or C,B,O) Turbidity-6026
2-( )Optic-T(or C,B,O) Turbidity-6136
2-( )Optic-T(or C,B,O) Chlorophyll
3-( )Optic-T(or C,B,O) Rhodamine

Select option (0 for previous menu):
```

Any available optical probe can be installed in any optical port on YSI 6-series sondes. If a single port is present (600 OMS V2-1, 6820V2-1, 6920V2-1), then the port will be designated “Optic T” in the software even though the port is not physically labeled with a “T” on the bulkhead. The two optical ports in the 6600V2-2, 6600EDS V2-2, 6820V2-1. and 6920V2-2 are labeled “Optic T” and “Optic C”, both in the software and on the bulkhead. Selection of either “Optic T” or “Optic C” in the software will produce submenus that allow the proper optical sensor to be selected. The four optical ports in the 6600V2-4 are labeled “Optic T”, “Optic C”, “Optic B”, and “Optic O”, both in the software and on the bulkhead. Selection of any of the options in the software will produce submenus that allow the proper optical sensor to be selected. Note, however, that only one probe of any type can be installed and activated in sondes with multiple optical ports. For example, it is not possible to use chlorophyll probes in both Optic T and Optic C ports of the 6600V2-2.

NOTE CAREFULLY: It is NOT possible to simultaneously activate BOTH the 6562 Rapid Pulse polarographic dissolved oxygen sensor and the 6150 ROX Optical dissolved oxygen sensor. Activation of either sensor will automatically deactivate the other selection. Thus, users of 6600V2-2, 6600EDS V2-2, 6820V2-1, and 6920V2-1 sondes CANNOT measure oxygen with both types of sensors.

NOTE: If you are using a previously purchased 6036 turbidity probe (discontinued on 1/1/02) with your sonde, select the “(*) Turbidity-6026” option in the above menu.

2.9.8 ADVANCED

From the Sonde Main menu select **8-Advanced** to display the sensor calibration constants, additional setup options, sensor coefficients and constants, and digital filtering options. The parameters listed depend on both the sensors installed and the sensors enabled, therefore your screen may not be identical to those shown below.

```
----------------Advanced--------------
1-Cal constants
2-Setup
3-Sensor
4-Data filter

Select option (0 for previous menu): 1
```

Select **1-Cal constants** to display the calibration constants, as shown in the following example. Note that values only appear for the enabled sensors.

```
-------------Cal constants-------------
1-Cond:5                B-NO3 A:2.543
2-DO gain:1.3048        C-Cl J:99.5
3-mV offset:0           D-Cl S:-0.195
4-pH offset:0           E-Cl A:2.543
5-pH gain:-5.05833      F-Turb Offset:0
6-NH4 J:51.2            G-Turb A1:500
7-NH4 S:0.195           H-Turb M1:500
8-NH4 A:1.092           I-Turb A2:1000
9-NO3 J:99.5            J-Turb M2:1000
A-NO3 S:-0.195

Select option (0 for previous menu): 0
```

The following table provides the default value, operating range, and comments relative to the calibration constants. Error messages will appear during calibration if values are outside the indicated operating range unless the designation is "not checked".

Parameter	***Default***	***Operating range***	***Comments***
Cond:	5	4 to 6	Traditional cell constant
DO gain:	1	0.5 to 2.0	
ODO gain	1	0.75 to 1.40	
ODO Tzero	Same as K1	+/- 0.45 from K1	ODO value at zero oxygen after 2-point cal
ODO K1	N/A	N/A	ODO value at zero oxygen
ODO K2	N/A	N/A	ODO regression coefficient
ODO K3	N/A	N/A	ODO regression coefficient
ODO K4	N/A	N/A	ODO regression coefficient
Pres offset:			
if not vented	-14.7	-20.7 to -8.7	
if vented	0.0	-6 to 6	
mV offset:	0.0	-100 to 100	
pH offset:	0.0	-400 to 400	
pH gain:	-5.0583	-6.07 to -4.22	
NH4 J	51.2	Not checked	
NH4 S	0.195	0.15 to 0.217	
NH4 A	1.092	Not checked	
NO3 J	99.5	Not checked	
NO3 S	-0.195	-0.217 to -0.15	
NO3 A	2.543	Not checked	
Cl J	99.5	Not checked	
Cl S	-0.195	-0.217 to -0.15	
Cl A	2.543	Not checked	
Turb Offset	0	-10 to 10	
Turb A1	500	0.6 to 1.5	Range is ratio of M1 to A1
Turb M1	500		
Turb A2	1000	0.6 to 1.5	Range is ratio of (M2-M1) to (A2-A1)
Turb M2	1000		
Turb+ Offset	0	-10 to 20	
Turb+ A1	500	0.6 to 1.5	Range is ratio of M1 to A1
Turb+ M1	500		

Turb+ A2	1000	0.6 to 1.5	Range is ratio of (M2-M1) to (A2-A1)
Turb+ M2			
Chl Offset	0	-30 to 20	
Chl A1	500	0.6 to 1.5	Range is ratio of M1 to A1
Chl M1	500		
Chl A2	1000	0.6 to 1.5	Range is ratio of (M2-M1) to (A2-A1)
Chl M2	1000		
Chl RFU Offset	0	-0.1 to +0.1	
PC Offset	0	-5000 to 10000	
PC Gain	1	Not checked	
PC RFU Offset	0	Not checked	
PE Offset	0	-5000 to 15000	
PE Gain	1	Not checked	
PE RFU Offset	0	Not checked	
Rhod Offset	0	-10 to 10	
Rhod A1	500	0.6 to 1.5	Range ratio of M1 to A1
Rhod M1	500		
Rhod A2	1000	0.6 to 1.5	Range is ratio of (M2-M1) to (A2-A1)
Rhod M2	1000		

To reset a calibration cell constant, access the sonde Calibrate menu. Then select the sensor and type "UNCAL" instead of the value. This action will change the calibration constants of that sensor back to the factory default.

From the Advanced menu, select **2-Setup** to display miscellaneous options. Type the appropriate number to activate/deactivate any of the displayed features.

```
------------Advanced setup--------
1-(*)VT100 emulation
2-Start up:Normal
3-( )Comma radix
4-( )Auto sleep RS232
5-( )Auto sleep SDI12
6-( )Multi SDI12
7-( )Full SDI12
8-( )Sample and hold
```

1-(*)VT100 emulation. Activate this option for VT100 terminal emulation. This feature allows the sonde to send escape sequences to clear the screen which in turn results in an improved display. Usually this feature should be activated, but, if your terminal or terminal emulator shows odd characters at the beginning of each menu title, then turn this item off. With the feature off, the sonde will send several carriage returns and line feeds to 'clear' the display. The number of <cr>'s and <lf>'s is determined by the page length setting.

2- Start up. This option allows the user to select the mode of sonde operation when power is applied or a "reset" command is issued. After pressing the "2" key, the following options will be displayed.

```
------Start up:---------------
1-(*)Normal
2-( )Menu
3-( )Run
4-( )Menu Run
5-( )NMEA

Select option (0 for previous
menu):
```

Users should select the option for their application based on the descriptions below. Note, however, that the "Start up Normal" selection will be best for most applications.

1- ( ) Start up Normal. This selection is the factory default and should be used for most operations of the sonde. When power is applied or a "reset" command is issued, the sonde firmware will return the "#" prompt. The user should then type "menu" to access the sonde firmware functionality

2- ( ) Start up Menu. When this item is enabled, the sonde will go directly to menu mode when power is applied to the sonde. If the command line mode is not useful for your applications, then enabling this item will negate the need to type "Menu" and **Enter** at the # prompt to access the Main sonde menu. Activation of this item is NOT recommended except for special applications.

3-( ) Start up Run. When this item is enabled the sonde will start sampling and output data as soon as power is applied to the sonde. If you are using your sonde for Unattended sampling, do not activate this mode. Activation of this item is NOT recommended except for special applications.

4-( ) Start up Menu Run. When this item is enabled, the sonde will first enter the menu mode and then the run mode where it will start sampling. If you are using your sonde for Unattended sampling, do not activate this mode. Activation of this item is NOT recommended except for special applications.

5-( ) Start up NMEA. When this item is active, the sonde will start sampling and output data in a format which is compatible with devices which utilize the NMEA protocol. See **Appendix N - NMEA Applications** for additional details. Activation of this item is NOT recommended except for special applications.

3-( )Comma radix. When this item is enabled, the sonde will replace decimal points with commas when printing numbers. NOTE: Regardless of this setting, SDI-12 'D' commands will still respond using a decimal point.

4-(*)Auto sleep RS232. Activation of this feature enables a power savings system when communicating with the sonde in RS-232 mode. When enabled, power is only applied to the sensors during sampling or calibration. The most important aspect of this feature is its effect on the dissolved oxygen protocol as described in Section 2.9.2. For this reason, this feature should be activated for long term monitoring studies in the RS-232 communication mode and deactivated for sampling studies where the user is present and the sonde runs continuously. Even with Autosleep inactive, the sonde will "sleep" after one minute with no communications.

5-(*)Auto sleep SDI12. Activation of this feature enables the power savings system when communicating with the sonde in SDI-12 mode. This is basically the same as item 5 above except that it is used in communication via the SDI-12 interface. Also, the sonde will "sleep" in about 100 milliseconds in the absence of communication, rather that waiting one minute in the Auto sleep RS-232 mode.

6-( ) Multi SDI12. Modifies the SDI12 protocol as follows: (1) No SDI12 service request will be issued. (2) Break commands will not cause a measurement reading to be aborted. Normally, you should leave this feature "off".

7-( ) Full SDI12. Enabling this feature forces full SDI-12 specification in order to pass the NR Systems SDI-12 Verifier. Disabling this feature will allow the unit to be more fault tolerant and will save some power. We recommend that you leave this feature "off".

8-( ) Sample and Hold. This feature is designed to be activated ONLY for studies in which your sonde is attached to a YSI 6500 Process Monitor. When "Sample and Hold" is active, the 6500 display and the SCADA output of the 6500 becomes equivalent to the internal memory of the sonde while an Unattended study is running. In the Unattended mode, the sonde "sleeps" between periodic samples with the interval between samples defined by the user. This method of operation results the extension of both the sonde battery life (not important in 6500 applications) and the time between required sensor maintenance procedures (which is important to 6500 applications using Rapid Pulse DO). After activation of the feature another entry will appear automatically which will allow you to input your sample interval which defines how often data is transmitted to the 6500 display. This new sample interval will automatically become the sample interval for the **Run|Discrete sample** mode of operation and you will not be able to change the interval until **Sample and Hold** is deactivated. In addition, the interval in the Run|Unattended **sample** mode will also change to the Sample and Hold interval. In this case, however, you will be able to change the Unattended Sample interval, but with the caveat that the **Sample and Hold interval** will also change, i.e., the **Unattended sample interval** and the Sample and Hold interval MUST be synchronized and the software assures that this will be the case.

For DCP applications, when "Sample and Hold" is active, the routine which triggers optical wipers, the sensor warm-up pattern, and the acquisition of data will be controlled by the sonde rather than the DCP. If the Unattended mode of the sonde is inactive, the data will be stored in a memory buffer and then acquired by the DCP when the "D" command is issued. If the Unattended mode is active, then the data will be stored both in the memory buffer and sonde memory for acquisition by the DCP. Use of the "Sample and Hold" feature with a DCP is particularly useful if you are also logging a back-up file to internal sonde memory. In this case, the wiping and data acquisition sequence of the sonde will ONLY be triggered by the sonde itself rather than by BOTH the sonde and the DCP and this will result in significantly less power consumption from the DCP battery and/or power system.

NOTE CAREFULLY: When **Sample and Hold** is active, the sonde will behave as if it is in an **Unattended sample** mode EVEN IF AN UNATTENDED SAMPLE HAS NOT BEEN ACTIVATED. Therefore, to conserve batteries, you should always DEACTIVATE the **Sample and Hold** feature when your sonde is not attached to the 6500 Process Monitor.

Select **3-Sensor** to display and change user-configurable constants as shown in the following display. Type the appropriate number to change to these parameters. Note that the listed items depend on which sensors your have active in your sonde setup.

```
------------Advanced sensor-----------
1-TDS constant=0.65
2-Latitude=40
3-Altitude Ft=0
4-(*)Fixed probe
5-( )Moving probe
6-DO temp co %/C=1.1
7-DO warm up sec=40
8-(*)Wait for DO
9-Wipes=1
A-Wipe int=1
B-SDI12-M/wipe=1
C-Turb temp co %/C=0.3
D-(*)Turb spike filter
E-Chl temp co %/C=0


Select option (0 for previous menu):
```

NOTE: The number of items on this menu depends greatly on the sensors that are available and enabled on your sonde. Below we describe every possible item on this menu. Your sonde probably may not have every item described below.

To edit one of the following menu items choose the number or letter that corresponds to it.

TDS constant=0.65 This selection allows you to set the constant used to calculate TDS. TDS in g/L is calculated by multiplying this constant times the specific conductance in mS/cm. This item will only appear if the conductivity sensor is enabled in the "Sensors enabled" menu. See **Section 53, Principles of Operation** for more information on the TDS parameter.

Salinity=0 This selection allows you to input a manually-acquired value of salinity for calculating other parameters such as DO mg/L and depth. *This item is not used or displayed if the conductivity sensor is enabled in the Sensors menu.*

Pres=0 psi This selection allows you to set a value of pressure for calculating other parameters like salinity. *This item is not used or displayed if the pressure sensor is enabled in the Sensors menu.*

Latitude=40 This selection allows you to input the global position (latitude) where the sonde is sampling. The units are degrees. For accuracy, enter the decimal equivalent to indicate degrees and minutes. For example, enter 41° 30 ' as 41.5. This value is used in the calculation of depth or level to account for global variations in the gravitational field. *This item will only appear if the pressure sensor is enabled in the Sensors menu.*

Flow Setup… This selection allows you to setup the sonde to output flow information. See **Appendix F, Flow** for detailed information on how to setup the Flow parameter. *This item will only appear if the sonde has shallow vented level.*

Altitude=0 This selection allows you to input the local altitude (relative to sea level) where the sonde is sampling. The units are feet. You may enter positive or negative values (range is -276 to 29028) to represent altitudes above or below sea level. This value is used in the

calculation of depth or level. *This item will only appear if the pressure sensor is enabled in the Sensors menu.*

(*)Fixed probe This selection allows you to identify how your sonde is being used. If your sonde is "fixed" or secured to a dock, buoy, platform or similar, select this option. This information is used in the calculation of depth and level. *This item will only appear if the Pressure-Abs sensor is enabled in the Sensors menu.*

(*)Moving probe This selection allows you to identify how your sonde is being used. If your sonde is being used in depth profiling select this option. This information is used in the calculation of depth and level. *This item will only appear if the Pressure-Abs sensor is enabled in the Sensors menu.*

DO temp co=1.1%/C This selection allows you to input the Rapid Pulse dissolved oxygen temperature coefficient. Do not change this value unless you consult YSI Technical Support. *This item will only appear if a Rapid Pulse DO sensor is enabled in the Sensors menu.*

.

ODO temp co=1.32%/C This selection allows you to input the ROX Optical dissolved oxygen temperature coefficient. Do not change this value unless you consult YSI Technical Support. *This item will only appear if a ROX Optical DO sensor is enabled in the Sensors menu.*

DO warm up=40 This selection allows you to set the amount of time allowed for the Rapid Pulse DO sensor warm up in seconds. Normally the default value of 40 seconds is adequate for most applications. However, there may be certain situations in which greater DO accuracy can be attained by increasing this time. Consult YSI Technical Support if you feel that your DO warm up time is incorrect. *This item will only appear if the Rapid Pulse Polarographic DO sensor is enabled in the Sensors menu.*

(*)Wait for DO When this feature is enabled, the sonde is forced to wait for the Rapid Pulse DO warm up time to expire before displaying any readings. Note that in SDI12 mode or while calibrating the Rapid Pulse DO sensor, the warm up time is used regardless of the activation of this item. Disabling this item allows you to see data without having to wait during the Rapid Pulse DO warm up time. Under normal operating conditions, this item should be turned off. If you are using the sonde with a data logger in RS232 mode and will be turning the sonde "on" and "off" for each sample, then you may want to enable this item so that only stable DO data are recorded. *This item will only appear if the Rapid Pulse Polarographic DO sensor is enabled in the Sensors menu.*

Wipes=1 If any number of optical sensors are enabled, this selection will determine the number of cleaning cycles which will occur when the wiper is activated manually or automatically. Since the wiper functions bidirectionally, a selection of "1" results in two passes of the wiper over the optical face. In most applications, a single cleaning cycle is adequate to keep the optical surface free of bubbles and fouling. However, in particularly harsh environments additional cleaning cycles may be needed and can be selected here. *This item will only appear if a optical sensor is enabled in the Sensors menu.*

Wipe Int=1 In applications where an optical probe is installed in the sonde and the instrument is collecting data in the SDI-12 communication mode, the wiper mechanism of the probe should be activated automatically in a periodic manner to clean the optical surface for fouling and bubbles. The value entered at this selection is the number of minutes between each automatic cleaning cycle. Thus, if Wipe Int is set to "5" and the instrument is in the Run mode, the wiper will activate every 5 minutes with no manual input. *This item will only appear if an optical sensor is enabled in the Sensors menu.*

The value of Wipe Int is sometimes overridden when the instrument is set up in the Unattended sampling mode. Under these conditions, the wiper will be automatically

activated at the interval assigned in the Unattended setup rather than that assigned in Wipe Int. Thus, in an Unattended study setup at a 15 minute sampling interval, the wiper will be activated only once every 15 minutes rather than at the indicated Wipe Int of 1 minute.

CAUTION: If Wipe Int is set to zero, then no wiping will occur either in Discrete or Unattended Sampling. Make certain that Wipe Int is set to some finite value prior to setting up an Unattended study or no automatic cleaning will occur.

SDI12-M/Wipe=1 This is the number of wiping cycles when the sonde is in SDI12 mode. The wiper for the 6026 and 6136 turbidity, 6025 chlorophyll, and 6130 rhodamine WT sensors will automatically wipe each time this many SDI12 "M" commands have been issued. If this value is set to zero, then no automatic wiping will occur. *This item will only appear if a turbidity, chlorophyll, or rhodamine WT sensor is enabled in the Sensors menu.*

Turb temp co %/C=0.3 This entry sets the coefficient for the temperature compensation of turbidity readings from the 6026 and 6136 sensors. The default values of 0.3 (6026) and 0.6 (6136) should not be changed by the user without consulting YSI Technical Support. *This item will only appear if a turbidity sensor is enabled in the Sensor menu.*

(*) Turb Spike Filter When this item is activated, the output of the turbidity sensor is mathematically processed to minimize the effect of unusual (or "bad") readings on the overall data presentation. In most cases, these "spike" events are the result of the chance passage of large suspended particles across the probe optics just at the time a reading is taken. Activation of this option generally results in a better display of the "average" turbidity of the water under examination and its use is recommended for most sampling and unattended applications. *This item will only appear if a turbidity sensor is enabled in the Sensors menu.*

Chl temp co %/C=0.0 This entry sets the coefficient for the temperature compensation of chlorophyll readings from the 6025 sensor. The default value of zero should only be changed by the user after establishing the temperature compensation factor for the phytoplankton sample in question. See Section 5.12, Chlorophyll and **Appendix I, Chlorophyll Measurements** of this manual for more information. *This item will only appear if a chlorophyll sensor is enabled in the Sensors menu.*

BGA-PC temp co %/C=0.0 This entry sets the coefficient for the temperature compensation of BGA-PC readings from the 6131 sensor. The default value of zero should only be changed by the user after establishing the temperature compensation factor for the phytoplankton sample in question. **See Section 5.16, Principles of Operation** of this manual for more information. *This item will only appear if a BGA-PC sensor is enabled in the Sensors menu.*

BGA-PE temp co %/C=0.0 This entry sets the coefficient for the temperature compensation of BGA-PE readings from the 6132 sensor. The default value of zero should only be changed by the user after establishing the temperature compensation factor for the phytoplankton sample in question. See **Section 5.17, Principles of Operation** of this manual for more information. *This item will only appear if a BGA-PE sensor is enabled in the Sensors menu.*

From the Advanced menu, select **4-Data filter** to display data smoothing options. Type the appropriate number to activate/deactivate any of the displayed features.

Sondes with **no optical (turbidity, chlorophyll, or rhodamine WT) probes** enabled will display the following menu.

```
------------Data filter setup----------
1-(*)Enabled
2-( )Wait for filter
3-Time constant=4
4-Threshold=0.001

Select option (0 for previous menu):
```

If any optical probe is enabled in the **Sensor** menu, then the menu will appear as follows.

```
------------Data filter setup----------
1-(*)Enabled
2-( )Wait for filter
3-Time constant. . .
4-Threshold. . .

Select option (0 for previous menu):
```

Choosing **3-Time Constant** will display the following the following or a similar menu to reflect your optical probe selection:

```
------------Time constant ----------
1- Turbid=12
2- Chl=12
3- Other=4


Select option (0 for previous menu):
```

Recommended settings for time constants are turbidity 12, rhodamine WT 12, chlorophyll 12, BGA-PC 24, BGA-PE 24, ODO 12, and “other” 4. Note that the time constant can be set independently for each optical probe and that time constant choices are only available for activated sensors. Rhodamine WT would appear in the display below if it had been activated as a sensor. All “other” sensors use the same time constant as shown below.

Choosing **4-Threshold** will display the following:

```
---------------Threshold--------------
1-Turbid=0.01
2-Chl=1
3-Other=0.001

Select option (0 for previous menu):
```

Setting thresholds is done in the same manner. Recommended threshold settings are 0.01 for turbidity, 1.0 for chlorophyll, 1.0 for rhodamine WT, 1.0 for BGA-PC, 1.0 for BGA-PC and 0.001 for "other".

The following descriptions provide additional information about the **Data Filter** feature.

1-(*) Enabled. Activating this item will result in data filtering according to the values set in (2), (3), and (4).

2-(*) Wait for filter. If this feature is activated, readings will be available for output only after the unit has warmed up for a time period equal to the Time Constant plus an extra 4 seconds. This feature is useful, for example, if you are operating in SDI12 mode and want to average the data over a particular period of time. In such a case, you would not want the filter to be engaging and disengaging, so the value of the Threshold should be set to a large value like 1. This feature should not be activated for normal use of the sonde.

3-Time Constant. This value is the time constant in seconds for the software data filter. Increasing the time constant will result in greater filtering of the data, but will also slow down the apparent response of the sensors.

4-Threshold. This value determines when the software data filter will engage/disengage. When the difference between two consecutive unfiltered readings is larger than the threshold, then the reading is displayed unfiltered. When the difference between two consecutive readings drops below the threshold, readings will be filtered again. For the purposes of the filter, consecutive readings are never more than 0.5 seconds apart. When sampling faster than 0.5 seconds consecutive readings will be at the faster rate and you may want to adjust the threshold accordingly. See section 2.9.1 for details on fast sampling.

The threshold feature is intended to speed response to large changes in a reading. For example, when changing from pH 7 buffer to a pH 4 buffer in a calibration, it is likely that the filter will disengage for a time showing unfiltered readings until the sensor has nearly equilibrated with the new buffer. At that time, the filter will re-engage and show filtered readings. Without disengaging the filter for awhile, much more time would be required to come to equilibrium after large changes in reading.

During the first time constant after the filter first engages, the output reflects a simple average of all the readings from the time the filter engaged until the present. Once the filter has been engaged for the period of the time constant, it becomes a simple filter with a time constant equal to that set in **3-Time Constant**. Each time the filter disengages and then re-engages, this process is repeated.

Filter engagement and disengagement occurs for each sensor independently. One parameter may be filtered while another is not because readings from one sensor are changing more than another.

Example: Moving a sonde from the air to a river water sample. Assume that the temperature of the sonde is similar to the temperature of the water, and that the water is in equilibrium with the air. The temperature and oxygen readings taken in the water will be very similar to those taken in the air. The conductivity

reading in air is near zero, and quite likely, is a very different reading in the water. The filter for the conductivity readings will likely disengage when the sonde is first placed in the river water, but stay engaged for the temperature and dissolved oxygen readings.

The filters for turbidity, chlorophyll, and rhodamine WT are somewhat different. For these sensors, the filter is temporarily disengaged during mechanical wiping so that when wiping is finished, the reading is the most current. The filter then reengages if possible. Optical sensor readings are frozen to the output during wiping so that "bad" values are not output.

A value of 0.001 for the threshold roughly corresponds to the following changes in sensor readings:

Temp: 0.1 °C
Conductivity in the 100 mS/cm range: 0.1 ms/cm
Conductivity in the 10 mS/cm range: 0.01 ms/cm
Conductivity in the 1 mS/cm range: 0.001 ms/cm
Conductivity in the 100 µS/cm range: 0.1 us/cm
Dissolved Oxygen: 0.2 percent air saturation
pH, ORP, Ammonium, Nitrate and Chloride: 0.6 mV

A value of 0.01 for the threshold roughly corresponds to a 10NTU change in turbidity. A value of 1.0 for the chlorophyll and rhodamine WT sensors threshold effectively means that the filter will be engaged under all conditions.

2.10 CARE, MAINTENANCE AND STORAGE

This section describes the proper procedure for storage of the sensors that will maximize their lifetime and minimize the time required to get the sonde ready for a new application. This section will describe interim or short-term storage between applications where the sonde is being used at a regular interval (daily, weekly, biweekly, etc.). and long term storage, (e.g., over-the-winter), where the sonde will not be used on a regular basis for several months.

In the descriptions and instructions below, it is assumed that the user has retained the vessels (bottles, boots, etc.) in which the individual sensors were stored on initial delivery. If these specific items have been misplaced or lost, they can be replaced by contacting YSI Technical Support. Alternatively, the user may have similar (and equally acceptable) storage equipment on hand even though it was not part of the original YSI package. Common sense should be the guide on substitution of storage vessels.

REMEMBER: DO NOT ATTEMPT TO GAIN ACCESS TO THE INTERNAL CIRCUITRY OF THE SONDE.

2.10.1 SONDE CARE AND MAINTENANCE

The YSI 6570 Maintenance Kit is available for use with your sonde. The kit includes several items that will be helpful or necessary to perform the proper routine maintenance on your sonde.

The 6570 Maintenance Kit includes two types of O-rings (for probes and cable connector), probe/installation/replacement tools, two cleaning brushes for the conductivity sensor, O-ring lubricant, and a syringe for cleaning the depth sensor port.

The 6570 Maintenance Kit can be ordered from any authorized YSI dealer, or directly from YSI. See **Appendix C** for details.

When caring for your sonde, remember that the sonde is sealed at the factory, and there is never a need to gain access to the interior circuitry of the sonde. In fact if you attempt to disassemble the sonde, you would void the manufacturer's warranty.

O-RING CARE AND MAINTENANCE

Your 6-series sondes utilize user-accessible o-rings as seals to prevent environmental water from entering the battery compartment and the sensor ports. Please read the following instructions carefully prior to deploying your YSI Sonde. Following the recommended procedure will assure that no problems will occur with regard to water influx into your sonde.

If the o-rings and sealing surfaces on the sondes are not maintained properly, it is possible that water can enter the battery compartment and/or sensor ports of your sonde. If water enters these areas, it can severely damage the battery terminals or probe ports causing loss of battery power during a deployment, false readings and corrosion to the probes. Therefore, when the battery compartment lid is removed from 600XLM, 6920V2-1, 6600V2-2, 6600EDS V2-2, 6600V2-4 and 600 OMS V2-1(battery version) sondes, the o-rings that provide the seal should be carefully inspected for contamination (e.g. hair, grit, etc.) and cleaned if necessary using the instructions provided below. The same inspection should be made of the o-rings associated with the probes, port plugs, and field cable connectors when they are removed. If no dirt or damage to the o-rings is evident, then they should be lightly greased without removal from their groove. However, if there is any indication at all of damage, the o-ring should be replaced with an identical item from the YSI 6570 Maintenance Kit supplied with your sonde. At the time of o-ring replacement, the entire o-ring assembly should be cleaned as described below.

To remove the o-rings:
Use a small, flat-bladed screwdriver or similar blunt-tipped tool to remove the o-ring from its groove. Check the o-ring and the groove for any excess grease or contamination. If contamination is evident, clean the o-ring and nearby plastic parts with lens cleaning tissue or equivalent lint-free cloth. Alcohol can be used to clean the plastic parts, but use only water and mild detergent on the o-ring itself. Also, inspect the o-rings for nicks and imperfections.

CAUTION:
- Using alcohol on o-rings may cause a loss of elasticity and may promote cracking.
- Do not use a sharp object to remove the o-rings. Damage to the o-ring or the groove itself may result.

Before re-installing the o-rings, make sure that you are using a clean workspace, clean hands and are avoiding contact with anything that may leave fibers on the o-ring or grooves. Even a very small bit of contamination (hair, grit, etc.) may cause a leak.

To re-install the o-rings:

- Place a small amount of Teflon stopcock grease between your thumb and index finger. (More grease is NOT BETTER!)

- Draw the o-ring through the grease while pressing the fingers together. Use this action to place a VERY LIGHT covering of grease to all sides of the o-ring. Place the o-ring into its groove making sure that it does not twist or roll.

- Use the previously grease-coated finger to once again lightly go over the mating surface of the o-ring. DO NOT use excess grease on the o-ring or the o-ring groove.

CAUTION: Do not over-grease the o-rings. The excess grease may collect grit particles that can compromise the seal. Excess grease can also cause the waterproofing capabilities of the o-ring to diminish, potentially causing leaks into the compartment. If excess grease is present, remove it using lens cloth or lint-free cloth.

SONDE PROBE PORTS

Whenever you install, remove or replace a probe, it is extremely important that the entire sonde and all probes be thoroughly dried prior to the removal of a probe or a probe port plug. This will prevent water from entering the port. Once you remove a probe or plug, examine the connector inside the sonde probe port. If any moisture is present, use compressed air to completely dry the connector. If the connector is corroded, return the sonde to your dealer or directly to YSI Technical Support, see **Section 9, Warranty and Service Information**, for details. When you reinstall a probe or port plug, lightly grease the O-ring with lubricant supplied in the YSI 6570 Maintenance Kit.

CABLE CONNECTOR PORT

The cable connector port at the top of the sonde should be covered at all times. While communicating with the sonde, a cable should be installed and tightened in place. This will assure that a proper connection is being made and prevent moisture and contaminants from entering.

When a communications cable is not connected to the cable connector port, the pressure cap supplied with the instrument should be securely tightened in place.

If moisture has entered the connector, dry the connector completely using compressed air, a clean cloth, or paper towel. Apply a very thin coat of lubricant from the 6570 Maintenance Kit to the O-ring inside the connector cap before each installation.

2.10.2 PROBE CARE AND MAINTENANCE

Once the probes have been properly installed, remember that periodic cleaning and DO membrane changes are required.

6562 RAPID PULSE DO PROBES

For best results, we recommend that the KCl solution and the Teflon membrane at the tip of the 6562 probe be changed prior to each sonde deployment and at least once every 30 days during the use of the sonde in sampling studies. In addition, the KCl solution and membrane should be changed if (a) bubbles are visible under the membrane; (b) significant deposits of dried electrolyte are visible on the membrane or the O-ring; and (c) if the probe shows unstable readings or other probe-related symptoms. See Section 2.3 for instructions on changing the DO membrane.

After removing the used membrane from the tip of the 6562 probe, examine the electrodes at the tip of the probe. If either or both of the silver electrodes are black in color, the probe should be resurfaced using the fine sanding disks which are provided in the 6035 reconditioning kit.

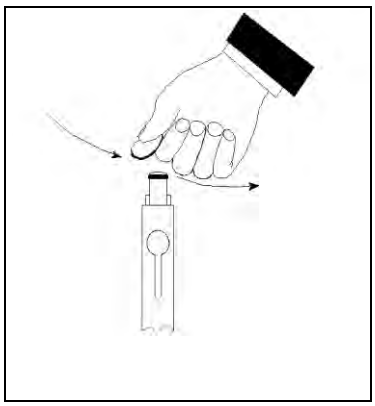

To resurface the probe using the fine sanding disk, follow the instructions below.

First dry the probe tip completely with lens cleaning tissue. Next, hold the probe in a vertical position, place one of the sanding disks under your thumb, and stroke the probe face in a direction parallel to the gold electrode (located between the two silver electrodes). The motion is similar to that used in striking a match. Usually 10-15 strokes of the sanding disk are sufficient to remove black deposits on the silver electrodes. However, in extreme cases, more sanding may be required to regenerate the original silver surface.

After completing the sanding procedure, repeatedly rinse the probe face with clean water and wipe with lens cleaning tissue to remove any grit left by the sanding disk. After cleaning, thoroughly rinse the entire tip of the probe with distilled or deionized water and install a new membrane.

IMPORTANT: Be sure to: (1) Use *only* the fine sanding disks provided in the 6035 maintenance kit in the resurfacing operation and (2) Sand in a direction parallel to the gold electrode. *Not adhering to either of these instructions can seriously damage the electrodes.*

NOTE: If this procedure is unsuccessful, as indicated by improper probe performance, it may be necessary to return the probe to an authorized service center. See **Section 9, Warranty and Service Information**, for contact information.

6150 ROX OPTICAL DO PROBES

CAUTION: The sensor membrane of the 6150 probe should be cleaned ONLY with a lens tissue which has been moistened with WATER. ALCOHOL should NOT be used in the cleaning process as it will dissolve the outer paint layer of the membrane assembly; other organic solvents will likely dissolve the dye itself. Under NO circumstances should you use organic solvents to clean your sensor membrane

When the 6150 sensor is not in field use, it MUST BE STORED IN A MOIST ENVIRONMENT, i.e., either in water or in water-saturated air with storage in water being preferable. If the sensor membrane is allowed to dry out by exposure to ambient air, it is likely to drift slightly at the beginning of your next deployment unless it is rehydrated. Thus, to make the use of the sensor as simple as possible, remember to store it WET whenever possible. The easiest storage method is to use the protective plastic cap (and enclosed sponge) which was on the probe at receipt. If you have retained this cap/sponge, then simply soak the sponge in water and replace the cap on the probe tip. Inspect the sponge every 30 days to make sure it is still moist. Alternatively, you can remove the probe from the sonde and place it directly in water (making sure that the water does not evaporate over time or leave the probe in the sonde and make certain that the calibration cup has an atmosphere which is water-saturated by placing approximately ½ inch of water in the bottom of the cup and then sealing it snugly to the sonde.

If you inadvertently leave your sensor exposed to ambient air for a period of more than approximately 2 hours, you can rehydrate the membrane by the following method: (1) Place approximately 400 mL of water in a 600 mL beaker or other similar glass vessel – do NOT use plastic vessels – and heat the water on a thermostatted hotplate or in an oven so that a consistent temperature of 50+/- 5 C is realized. Place the probe tip containing the sensor membrane in the warm water and maintain the elevated temperature for approximately 24 hours. Cover the vessel if possible to minimize evaporation. After rehydration is complete, store the probe in either water or water-saturated air at room temperature prior to calibration and deployment. **CAUTION: MAKE CERTAIN THAT THE WATER IN THE VESSEL DOES NOT COMPLETELY EVAPORATE DURING THE REHYDRATION STEP.**

YSI recommends the optical DO membrane assembly be replaced once a year in order to assure the maximum accuracy for the sensor and the 6155 kit allows the user to carry out this replacement without returning the sensor to the factory. The following section provides detailed instructions for replacement of the optical DO membrane assembly on the YSI Optical DO sensor.

NOTE CAREFULLY: The 6155 optical sensor membrane has been shipped in a humidified atmosphere and the package SHOULD NOT BE OPENED until immediately before membrane replacement. Once the sensor membrane has been installed on the 6150 DO sensor as described below, it is important to keep the membrane in an environment which is characterized by 100% humidity. Thus, after replacement of the membrane and installation of the sensor system in your sonde, the DO probe with attached membrane should be stored either immersed in water or in a sealed calibration cup which contains enough water so that the atmosphere is water-saturated. See sensor maintenance instructions below if you inadvertently leave the sensor in ambient air for a period of more than 2 hours.

Membrane Installation Instructions

Use the schematic below as an aid in replacement of the YSI Optical DO membrane.

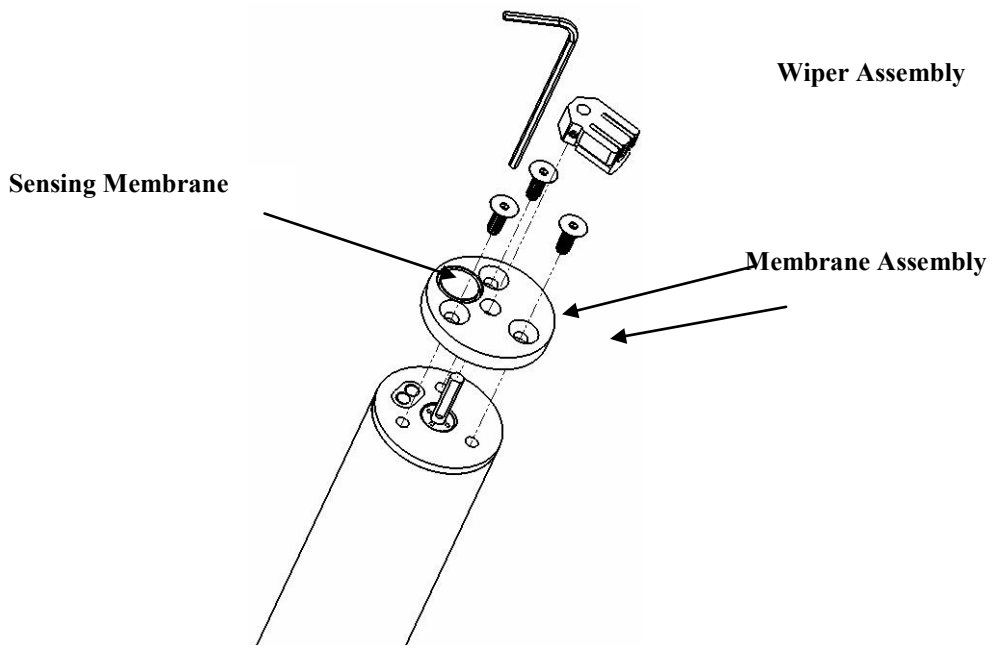

Note: The following steps can be carried out with the probe either installed in the sonde or removed from it. Avoid touching the sensing membrane (shown in the above drawing) during the procedure.

- Remove the wiper assembly from the 6150 Optical DO Sensor and set it aside for later use.
- Using the 1/16 inch hex driver supplied in the 6155 Kit, remove the three screws from the sensor face as shown in the diagram above. Remove the old membrane assembly from the wiper shaft and set the screws aside for later use.
- Remove the new sensor membrane assembly from its hydrated container and dry the backside (the side with the cavity) completely. Be certain that there is no water remaining in the cavity which holds the sensing membrane. Use lens cleaning tissue, a gentle stream of compressed air, or both to assure that the membrane cavity is dry. Do not heat the membrane assembly.
- Make certain that there is an O-ring in place in the groove surrounding the sensor cavity.
- Place the sensor membrane assembly over the wiper shaft and align the holes in the membrane holder with those on the probe face so that the sensor cavity is located over the optical fiber ends on the probe face. Be absolutely certain that the sensor cavity lines up with the probe optics before proceeding.
- Place one of the screws in a hole in the membrane assembly and rotate the assembly slightly as needed to match the screw to the proper hole in the probe face. Partially tighten the screw using the 1/16 inch hex driver.
- Insert screws in the other two holes of the membrane assembly, rotating slightly as needed to match the screw to the hole in the probe face. Partially tighten the screws using the 1/16 inch hex driver. Take care not to scratch the membrane surface.
- Tighten all three screws securely using the 1/16 inch hex driver. CAUTION: INSERT LONG SHAFT OF THE HEX DRIVER INTO THE SCREW AND TURN WITH THE SHORT SHAFT AS SHOWN IN THE DIAGRAM TO AVOID OVERTIGHTENING THE SCREWS.
- Replace the wiper on the probe shaft and tighten with the proper 0.05 inch hex driver.

- **Store the probe with new membrane in either water or water-saturated air as described on the previous page.**

6560 CONDUCTIVITY/TEMPERATURE PROBES

The openings that allow fluid access to the conductivity electrodes must be cleaned regularly. The small cleaning brush included in the 6570 Maintenance Kit is ideal for this purpose. Dip the brush in clean water and insert it into each hole 15-20 times. In the event that deposits have formed on the electrodes, it may be necessary to use a mild detergent with the brush. After cleaning, check the response and accuracy of the conductivity cell with a calibration standard.

NOTE: If this procedure is unsuccessful, or if probe performance is impaired, it may be necessary to return the probe to an authorized dealer service center See **Section 9, Warranty and Service Information** for contact information.

The temperature portion of the probe requires no maintenance.

6561/6561FG pH AND 6565/6565FG/6566 COMBINATION pH-ORP PROBES

Cleaning is required whenever deposits or contaminants appear on the glass and/or platinum surfaces of these probes or when the response of the probe becomes slow.

Remove the probe from the sonde. Initially, simply use clean tap water and a soft clean cloth, lens cleaning tissue, or cotton swab to remove all foreign material from the glass bulb (6561 and 6565) and platinum button (6561). Then use a moistened cotton swab to carefully remove any material that may be blocking the reference electrode junction of the sensor.

CAUTION: When using a cotton swab with the 6561 or 6565, be careful NOT to wedge the swab tip between the guard and the glass sensor. If necessary, remove cotton from the swab tip, so that the cotton can reach all parts of the sensor tip without stress. You can also use a pipe cleaner for this operation if more convenient. DO NOT use toothbrush, steel wool, or abrasive cleaners on any glass sensor.

If good pH and/or ORP response is not restored by the above procedure, perform the following additional procedure:

1. Soak the probe for 10-15 minutes in clean tap water containing a few drops of commercial dishwashing liquid, or enzyme-containing detergent such as Terg-A-Zyme (by Alconox).

2. GENTLY clean the glass bulb and platinum button by rubbing with a cotton swab soaked in the cleaning solution.

3. Rinse the probe in clean tap water, wipe with a cotton swab saturated with clean water, and then rerinse with clean tap water.

If good pH and/or ORP response is still not restored by the above procedure, perform the following additional procedure:

1. Soak the probe for 30-60 minutes in one molar (1 M) hydrochloric acid (HCl). This reagent can be purchased from most distributors. Be sure to follow the safety instructions included with the acid.

2. Rinse the probe in clean tap water, wipe with a cotton swab saturated with clean water, and then rerinse with clean tap water. To be certain that all traces of the acid are removed from the probe crevices, soak the probe in pH 4 or 7 buffer for about an hour with occasional stirring.

If biological contamination of the reference junction is suspected or if good response is not restored by the above procedures, perform the following additional cleaning step:

1. Soak the probe for approximately 1 hour in a 1 to 1 dilution of commercially-available chlorine bleach.

2. Rinse the probe with clean tap water and then soak for at least 1 hour in pH 4 or 7 buffer with occasional stirring to remove residual bleach from the junction. (If possible, soak the probe for period of time longer than 1 hour in order to be certain that all traces of chlorine bleach are removed.) Then rerinse the probe with clean tap water and retest.

Dry the sonde port and probe connector with compressed air and apply a very thin coat of O-ring lubricant to all O-rings before re-installation. Keep pH probes moist when not in use but NEVER store in DI water.

DEPTH SENSOR

The depth sensor modules are factory installed options that are located between the bulkhead and the sonde tube. For 600XL and 600XLM sondes, there is a circular protective cap with two small holes. The cap cannot be removed, but a syringe is supplied in the maintenance kit to aid in cleaning the pressure port. Fill the syringe with clean water, place the tip of the syringe into one of the holes and gently force water through the pressure port. Ensure that the water comes out of the other hole. Continue flushing the pressure port until the water comes out clean.

***CAUTION*:** Never try to remove the circular pressure port cap.

For 6920V2-1, 6920V2-2, 6600V2-2, 6820V2-1and 6600V2-2 sondes, the depth sensor is exposed to the water by either a circular access port on the side of the sonde or a though-hole on a module just above the sonde bulkhead. A syringe is supplied in the maintenance kit to aid cleaning the pressure port. Fill the syringe with clean water, place the tip of the syringe into one of the holes and gently force water through the access port. Ensure that the water comes out of the other hole. Continue flushing the pressure port until the water comes out clean.

***CAUTION*:** Do not attempt to remove the depth module from the sonde body.

LEVEL SENSOR

For level sensors follow all the maintenance procedures given for depth sensors. In addition, ensure that the desiccant always remains active. Active desiccant is a distinctive blue color. When it can absorb no more moisture, it is a rose red or pink color. For either the cartridge or the canister, the end that is vented to atmosphere will begin to change color first. As long as the desiccant closest to the sonde is blue, no maintenance is required. Local conditions will dictate how long the desiccant will last. In humid environments, the desiccant may need to be changed or regenerated well before it is completely exhausted to ensure that it lasts the entire deployment.

You may regenerate the desiccant, replace the desiccant in the cartridge or canister, or replace the entire cartridge or canister. See **Appendix G, Using Vented Level**, for more information.

To regenerate the desiccant, remove it from the unit and spread it evenly, one granule deep, on a suitable tray. Heat for about one hour at about 200° C (about 400° F). The desiccant should then be cooled in a suitable, tight container before refilling the unit. The color of the desiccant will return to blue if the

regeneration cycle has been successful. The felt filters should also be dried at about 100° C (about 200° F) for about 30 minutes before assembly.

Desiccant material is sold separately. Both the cartridge and canister can easily be opened, emptied, and refilled.

***CAUTION*:** It is important to keep the tube in vented sondes and cables dry. They are supplied with caps for closing the volume when not in use. Keep the caps on until just before calibration and deployment. For storage, replace the caps.

6882 CHLORIDE, 6883 NITRATE AND 6884 AMMONIUM SENSORS

You should clean these probes whenever deposits or contaminants appear on the ion selective membranes located on the tips of these sensor modules. If possible, the module should be cleaned while installed in the sonde bulkhead. Use clean water and a moist piece of lens cleaning tissue to *gently* wipe the sensor membranes until no more contaminants are removed. However, under some conditions, it may be necessary to remove the module from the sonde bulkhead for cleaning and/or storage. To remove the module, follow the diagram at the side. Remove the module with finger pressure only, if possible. However, it is acceptable to use small pliers if necessary to loosen the module for final removal by hand. **Be very careful not to squeeze the module any more than is necessary for a firm grip. Use slipjaw pliers to minimize the chance of applying too much pressure on the module**. While the module is removed from the sonde, be sure to dry the sonde port and probe connector with compressed air and apply a very thin coat of lubricant to the O-ring before re-installation.

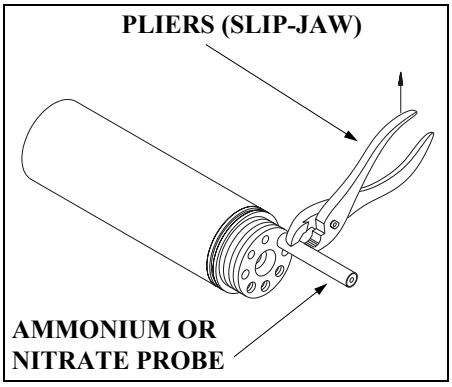

NOTE: The ion selective membranes are fragile. Be certain to: (1) Use only *moist*, high quality lens cleaning tissue for the cleaning procedure (not paper towels or other coarse materials); and (2) Stroke the probe face very gently with the tissue during the procedure. *If you do not adhere to these instructions, you can seriously damage the sensors.*

OPTICAL PROBES–6026 AND 6136 TURBIDITY; 6025 CHLOROPHYLL; 6131 BGA-PC; 6132 BGA-PE; 6130 RHODAMINE WT

The 6026, 6136, 6025, 6131, 6132, and 6130 probes require only minimal maintenance. After each deployment, the optical surface on the tip of the turbidity probe should be inspected for fouling and cleaned if necessary by gently wiping the probe face with moist lens cleaning paper. In addition, for the 6025, 6026, 6136, and 6130 probes, we recommended replacing the wiper periodically. The frequency of this replacement depends on the quality of water under examination. A replacement wiper is supplied with the probes, along with the small hex driver required for its removal and reinstallation. Follow the instructions supplied with the probe to ensure proper installation of the new wiper assembly. Additional wipers are available from YSI.

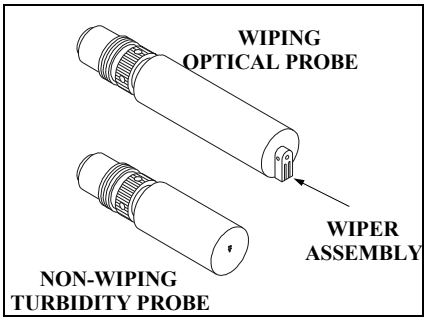

2.10.3 SONDE STORAGE

Proper storage of the your sonde between periods of usage will not only extend the life of the sensors, but will also ensure that the unit will be ready to use as quickly as possible in your next application.

GENERAL RECOMMENDATIONS FOR SHORT TERM STORAGE

The recommended short term or interim storage procedure is simple and identical for all sondes -- YSI 600R, 600QS, 600XL, 600XLM, 6820V2-1, 6820V2-2, 6920V2-1, 6920V2-2, 6600V2-2, 6600EDS V2-2, 6600V2-4, and 600 OMS V2-1.

No matter what sensors are installed in the instrument, it is important to keep them moist without actually immersing them in liquid, which could cause some of them to drift or result in a shorter lifetime. For example, the reference junction of a pH sensor must be kept moist in pH 4 or 7 buffer, or tap water, to minimize its response time during usage, but continued immersion in pure water will compromise the function of the glass sensor and/or result in long term leaching of the reference junction.

YSI recommends that short term storage of all multi parameter instruments be done **by placing approximately 0.5 inch of water in the calibration and/or storage cup that was supplied with the instrument, and by placing the sonde with all of the probes in place into the cup.** The use of a moist sponge instead of a half inch of water, is also acceptable, as long as its presence does not compromise the attachment of the calibration cup to the sonde. **The calibration cup should be sealed to prevent evaporation.**

The key for interim storage is to use a minimal amount of water so that the air in chamber remains at 100 percent humidity. The water level has to be low enough so that none of the sensors are actually immersed. Any type of water can be used in this protocol: Distilled, deionized, or tap water. If the storage water is inadvertently lost during field sampling studies, environmental water can be used to provide the humidity.

Sondes with level sensors have a tube that vents the pressure transducer to the atmosphere**. It is important that the air in the tube remains dry at all times.** Sondes with integral cables should be stored with the desiccant in place and the vented end of the desiccant system sealed. Sondes with connectors should be stored with the connector cap firmly in place. When disconnecting the cable, put the cap on immediately. Vented cables should be stored with their caps in place, in a bag containing desiccant.

Interim multi parameter storage is easy. Simply remember the following key points:

- Use enough water to provide humidity, but not enough to cover the probe surfaces.
- Make sure the storage vessel is sealed to minimize evaporation.
- Check the vessel periodically to make certain that water is still present.
- For sondes with level sensors, keep the tube sealed and dry.

GENERAL RECOMMENDATIONS FOR LONG-TERM SONDE STORAGE

The following are long term storage recommendations listed by instrument type. They will be applicable for sondes with typical sensor configurations.

600XL, 600XLM -- Remove the pH or pH/ORP probe from the sonde and store it according to the instructions found in the following section on individual sensors. Cover the empty port with the provided

plug. Leave the conductivity/temperature and the dissolved oxygen probes in the sonde with a membrane and electrolyte on the DO sensor. Place enough of deionized, distilled, or tap water in the calibration cup to cover the sensors, insert the sonde into the vessel, and seal with the cap/O-ring to minimize evaporation.

6820V2-1, 6820V2-2, 6920V2-1, 6920V2-2, 6600V2-2, 6600EDS V2-2, and 6600V2-4 -- Leave the conductivity/temperature and the dissolved oxygen probes in the sonde with a membrane and electrolyte on the DO sensor. Remove all other probes from the sonde and store according to the instructions found in the following section on individual sensors. Cover the empty ports with the provided plugs. Place enough of deionized, distilled, or tap water in the calibration cup to cover the sensors, insert the sonde into the vessel, and tighten the threaded cup to attain a good seal and minimize evaporation.

600R and 600QS (with Replaceable Reference Electrode Module) -- Instruments of this design were generally sold after January, 1996 and can be identified by the presence of 4 probes -- temperature, dissolved oxygen, pH reference, and pH glass (600R) or pH glass/ORP (600QS) in the bulkhead. Remove the reference module, store it as described below, and plug the open port with the insert that was provided. Make certain that the dissolved oxygen sensor has an undamaged membrane and electrolyte in place. Place approximately 300 mL of tap water in the storage vessel, insert the sonde, and seal the vessel with the cap and O-ring. **Do not use deionized or distilled water in this case, as it may damage the pH glass sensor that must remain in the sonde.**

600 (with Combination pH Sensor) -- Instruments of this design were generally sold prior to January, 1996 and can be identified by the presence of only 3 probes (temperature, dissolved oxygen, pH) in the bulkhead. Be certain that the dissolved oxygen sensor has an undamaged membrane and electrolyte in place. Fill the provided storage vessel with a solution that is 2 molar (2 M) in potassium chloride (KCl) to a level that completely covers the dissolved oxygen and pH probes. See the following section for instructions on preparation of the KCl storage solution. Seal the vessel with the cap and O-ring.

600 OMS V2-1 – Store sonde dry with optical probe left in port. Cover membrane on ROX sensor with moist sponge.

All Sondes with Batteries – Because batteries can degrade over time and release battery fluid, it is extremely important to remove the batteries from all 600XLM, 6920V2-1, 6920V2-2, 6600V2-2, 6600EDS V2-2, 6600V2-4, and 600 OMS V2-1(battery version) prior to long term storage. Failure to remove batteries can result in corrosive damage to the battery terminals if the batteries happen to leak.

2.10.4 PROBE STORAGE

LONG-TERM STORAGE OF PROBES

The following sections provide additional details on the storage of individual sensors associated with instruments in the 6-Series product line from YSI.

TEMPERATURE

No special precautions are required. Sensors can be stored dry or wet, as long as solutions in contact with the thermistor probe are not corrosive (for example, chlorine bleach).

CONDUCTIVITY

No special precautions are required. Sensors can be stored dry or wet, as long as solutions in contact with thermistor probe and conductivity electrodes are not corrosive (for example, chlorine bleach). However, it is recommended that the sensor be cleaned with the provided brush prior to long term storage.

RAPID PULSE DISSOLVED OXYGEN

Rapid Pulse dissolved oxygen sensors should always be stored with a membrane and electrolyte in place and in such a way that the drying out of the electrolyte on the probe face is minimized. For long-term storage, the medium should be water rather than the moist air used in interim storage. The long-term storage protocol is also dependent on the instrument under consideration.

ROX dissolved oxygen sensors should always be stored in a moist environment, i.e., either in water or in water-saturated air with storage in water being preferable. The easiest storage method is to use the protective plastic cap (and enclosed sponge) which was on the probe at receipt. If you have retained this cap/sponge, then simply soak the sponge in water and replace the cap on the probe tip. Inspect the sponge every 30 days to make sure it is still moist. Alternatively, you can remove the probe from the sonde and place it directly in water (making sure that the water does not evaporate over time or leave the probe in the sonde and make certain that the calibration cup has an atmosphere which is water-saturated by placing approximately ½ inch of water in the bottom of the cup and then sealing it snugly to the sonde.

For all 6-series sondes other than the 600R, 600QS, and 600 OMS V2-1, two long-term storage methods are equally acceptable.

1. Remove all probes other than dissolved oxygen (Rapid Pulse or ROX), conductivity, and temperature from the sonde and seal the vacant ports with the provided port plugs. Leave the electrolyte and membrane in place on the Rapid Pulse dissolved oxygen sensor. Fill the calibration cup with water (tap, deionized, or distilled are equally acceptable) and insert the sonde. Make certain the water level is high enough to completely cover the DO sensor. Seal the vessel to prevent evaporation of the water. At the end of the storage time, remove the existing membrane and re-membrane the probe using new electrolyte.

2. Remove the Rapid Pulse dissolved oxygen sensor from the sonde leaving the electrolyte and membrane in place. Store the probes in water (tap, deionized, or distilled are equally acceptable) in a beaker, flask, or other vessel of the user‟s choice. **Be sure not to damage the membrane or the probe tip when placing the probe on the bottom of the vessel.** If possible cover the vessel with parafilm or plastic wrap to minimize evaporation of the water during long-term storage. Monitor the water level in the storage vessel periodically and replenish if loss due to evaporation occurs. At the end of the storage time, remove the existing membrane and re-membrane the probe using new electrolyte.

Because the user cannot remove the dissolved oxygen probe of the 600R and 600QS from the sonde, a slightly different long-term storage protocol is required:

For 600 systems equipped with a replaceable reference electrode module, remove the reference module, store it as described below and plug the open port with the port plug that was provided. Make certain that the dissolved oxygen sensor has an undamaged membrane and electrolyte in place. Fill the provided storage vessel with a solution which is 2 molar (2 M) in potassium chloride (KCl), insert the sonde and seal the vessel with the cap and O-ring. This solution can be prepared by dissolving 74.6 g of KCl in 500 mL (approximately 1 pint) of water or 37.3 g of KCl in 250 mL (approximately 0.5 pint) of water. The water should be distilled or deionized. If KCl solution is unavailable, it is acceptable to store the dissolved oxygen and pH glass sensors in tap water. **Do not use deionized or distilled water in this case, as it may damage the pH glass sensor, which must remain in the sonde.** At the end of the storage time, remove the existing membrane and re-membrane the probe using new electrolyte.

ROX OPTICAL DISSOLVED OXYGEN

When the 6150 sensor is not in field use, it MUST BE STORED IN A MOIST ENVIRONMENT, i.e., either in water or in water-saturated air with storage in water being preferable. If the sensor membrane is allowed to dry out by exposure to ambient air, it is likely to drift slightly at the beginning of your next deployment unless it is rehydrated. Thus, to make the use of the sensor as simple as possible, remember to store it WET whenever possible. The easiest storage method is to use the protective plastic cap (and enclosed sponge) which was on the probe at receipt. If you have retained this cap/sponge, then simply soak the sponge in water and replace the cap on the probe tip. Inspect the sponge every 30 days to make sure it is still moist. Alternatively, you can remove the probe from the sonde and place it directly in water (making sure that the water does not evaporate over time or leave the probe in the sonde and make certain that the calibration cup has an atmosphere which is water-saturated by placing approximately ½ inch of water in the bottom of the cup and then sealing it snugly to the sonde.

pH

The key to pH probe storage, short or long-term, is to make certain that the reference electrode junction does not dry out. Junctions which have been allowed to dry out due to improper storage procedures can usually be rehydrated by soaking the sensor for several hours (overnight is recommended) in a solution which is 2 molar in potassium chloride (see dissolved oxygen section above for preparation of this solution). If potassium chloride solution is not available, soaking the sensor in commercial pH buffers or tap water may restore probe function. However in some cases the sensor may have been irreparably damaged by the dehydration and will require replacement. It is also important to remember not to store the pH sensor in distilled or deionized water as the glass sensor may be damaged by exposure to this medium.

The long-term storage protocol is dependent on the instrument.

For all YSI 6-series sondes other than the 600R and 600QS, the recommended long-term storage protocol is identical. Remove the probe from the sonde and seal the vacant port with the provided plug. Place the probe in the storage vessel (plastic boot or bottle) which was in place on delivery. The vessel should contain a solution which is 2 molar in potassium chloride, or pH 4 or 7 buffer. Make certain that the vessel is sealed to prevent evaporation of the storage solution.

For YSI 600R and 600QS sondes, remove the reference module and plug the open port with the provided insert. Place the module in the storage vessel boot, which was in place on delivery, and seal the vessel with electrical tape. The vessel should contain a solution which is 2 molar in potassium chloride and should be sealed to prevent evaporation of the storage solution. Make certain that the dissolved oxygen sensor has an undamaged membrane and electrolyte in place. Fill the provided sonde storage vessel with tap water, insert the sonde, and seal the vessel with the cap and O-ring. **Do not use deionized or distilled water in this case, as it may damage the pH glass sensor that must remain in the sonde.**

ORP

Long Term Storage: ORP is not available on the YSI 600R. For the 600QS, where the ORP sensor cannot be removed from the sonde, store the sensor in tap water in a sealed storage bottle. For all other YSI 6-series sondes, the recommended long term storage protocol is identical. Remove the probe from the sonde and seal the vacant port with the provided plug. Place the probe in the storage vessel (plastic boot or bottle) which was in place on delivery. The vessel should contain a solution which is 2 molar in potassium chloride. Make certain that the vessel is sealed to prevent evaporation of the storage solution.

AMMONIUM, NITRATE AND CHLORIDE

The active element in the ammonium and nitrate ion selective electrode (ISE) sensors is a polyvinyl chloride (PVC) membrane that is impregnated with the reagent that provides specificity for either ammonium or nitrate. The useful life of this sensor can be reduced if the membrane is stored immersed in water. Thus, storage in dry air is recommended for long term storage. While dry air is slightly preferable for general storage, the short-term storage of these sensors in the sonde, with the entire sensor array in moist air, will have no significant detrimental effect on the life of the membrane. Remove the sensor module from the sonde and cover the vacant port with the provided plug. Place the sensor back in the storage boot that was provided, and set aside in room air.

The chloride ISE sensor utilizes a solid state membrane that provides specificity. For long-term storage, the module should be removed from the sonde, wiped clean with moist lens cleaning tissue, and placed in its storage boot to prevent abrasion.

TURBIDITY, CHLORPHYLL, BGA-PC, BGA-PE, AND RHODAMINE WT

No special precautions are necessary for either the short or long-term storage of these YSI optical probes. However, for long-term storage, the user may wish to remove the probe from the sonde, replace it with a port plug, and store the probe in dry in air to minimize any cosmetic degradation of the probe body and to maximize the life of the wiper.

DEPTH AND LEVEL

No special precautions are required for the sensor itself, but see instructions above with regard to maintaining a dry atmosphere in the vent tube. Sensors can be stored dry or wet, as long as solutions in contact with the strain gauge sensor port are not corrosive (for example, chlorine bleach).

Recommendations are identical for short-term and long-term storage.

SECTION 3 650 MDS DISPLAY/LOGGER

3.1 INTRODUCTION

The YSI 650 Multiparameter Display System (650 MDS) is a powerful, hand held microcomputer based instrument that allows the user to display sonde readings, configure sondes, store and recall data, upload data from sondes and transfer data to computers for analysis and plotting.

Key features of the YSI 650 MDS:

- Completely waterproof case that is submersible to 1 m. Meets IP-67 specification.
- Rugged design with high impact resistance
- Large, non-volatile memory
- Simple cellular phone style keypad.
- Simple intuitive user-interface
- Choice of alkaline batteries or optional rechargeable battery pack
- Fuel gauge display of battery capacity
- User selectable backlight
- Handstrap (standard) or hands free harness (optional) for user comfort
- Optional barometer
- Optional GPS interface
- Compatibility with YSI EcoWatch for Windows data analysis software
- User upgradeable software via the YSI Web page
- CE and Australian C-Tick Compliance.

Partnered with a YSI 6-Series sonde, the 650 will allow the user to easily:

- Display real-time readings from YSI 6-series sondes.
- Log real-time sonde data to internal meter memory with custom site lists.
- Calibrate 6-series sondes.
- Set up 6-series sondes for deployment.
- Upload data from sondes for transfer to PC.

3.2 GETTING STARTED

This section is designed to quickly familiarize you with the hardware and software components of the YSI 650 and its accessories. By the end of Section 3.2 you will have...

- o Unpacked the YSI 650 and confirmed that all components are present
- o Become familiar with the general features and setup configurations of your YSI 650.
- o Installed batteries in the YSI 650.
- o Established communication between your 6-series sonde and the YSI 650.
- o Viewed data from your 6-series sonde on the YSI 650 display.
- o Learned the basics of making alphanumeric entries from the keypad by setting the YSI 650 clock and entering an Instrument ID name.

Successful completion of the above list is essential for you to continue on to Section 3.3, which focuses on the custom setup of the 650. In subsequent sections, you will learn about how to set up sonde menus via the 650 interface, log data to both sonde and 650 memories, and use the GPS and barometer features of the 650.

3.2.1 UNPACKING

Remove the instrument from the shipping box, being careful not to discard any parts or supplies. Use the packing list to ensure all items are included, and inspect all assemblies and components for damage. If any parts are damaged or missing, contact your YSI representative immediately. If you do not know which YSI dealer you obtained your YSI 650 from, refer to Section 8 of your 6-series sonde manual for contact information.

The 650 is offered in four configurations:

- 650-01 – Low memory with no barometer
- 650-02 – High memory with no barometer
- 650-03 – Low memory with barometer
- 650-04 – High memory with barometer

All configurations include the 650 with hand strap and strain relief lanyard installed and the 655174 PC interface cable for use in data transfer to a PC and software updates from a PC. Make certain that you have received these two items (650 itself and PC Interface Cable) during the unpacking process.

The following optional accessories are offered for use with the 650.

- 6113 Rechargeable Battery Pack Kit with 6116 charger adapter cable, 6114 110 volt wall charger, and 6117 battery pack included
- 6126 Rechargeable Battery Pack Kit with 6116 charger adapter cable, 6123 universal charger, European power cable, British power cable, and 6117 battery pack included
- 6127 Rechargeable Battery Pack Kit with 6116 charger adapter cable, 6123 universal charger, China/Australia power cord, and 6117 battery pack included
- 4654 Tripod
- 614 Ultra Clamp
- 5085 Hands Free Harness
- 5065 Form-fitting Case
- 6117 Extra Rechargeable Battery Pack
- 6115 GPS Cable for interface with user-supplied GPS unit
- 616 Cigarette Lighter Charger

If you have ordered any of these accessories with your 650, make certain during the unpacking process that you have received them.

3.2.2 UNDERSTANDING THE 650 MEMORY

The 650 is available with two memory options – “low” and “high”.

The less expensive low memory option (650-01 and 650-03) is designed for users who typically use their 6-series sondes in sampling applications and store limited data to their logger. The available memory of the low memory option (ca. 10 kB) will allow the user to log approximately 150 field readings to a single file in the 650 although the exact logging capability is dependent on the number of parameters active in the 6-series sonde. Note also that if multiple files are utilized, the number of logged field readings will be reduced. In addition, the low memory option will also allow the user to upload small files to the 650 that have been logged to the internal memory of sondes during **Discrete** or **Unattended sampling** studies.

The high memory option (1.5 mB) of the 650 is designed for users who log large files directly to the 650 or who wish to upload large (or many) files to the 650 from the internal memory of sondes which have been

used to log data in **Discrete or Unattended sampling** applications. For example, with the high memory option, it would be possible to easily upload the data from 7 sondes, each of which have data files in excess of 200 kB or approximately 75 days at a 15-minute unattended sampling interval.

No matter which memory option has been selected, it is important to understand that the memory resident in the 650 is "Flash", the same type of memory present in YSI 6-series sondes. Flash memory requires no battery backup and therefore stored data cannot be lost due to instrument malfunction – a significant advantage. However, it is not possible to erase individual files from flash memory – to free-up memory, the user must erase (or format) the entire memory chip. From a practical point of view, this means that, while named files which are already present in the 650 memory can be "overwritten" during multiple uploads, the previously written files still occupy space in the memory. These files are in fact designated "deleted" as will be described in Section 3.6.5 below. For example, if a file named "TEST" is uploaded initially with a memory allocation of 50 kB and then is uploaded at a later time (and "overwritten") with a memory allocation of 100 kB, the total memory occupied is 150 KB even though only one file with the designation "TEST" and a file size of 100 kB is shown in the file directory. For this reason, when dealing with large files, the user may wish to transfer files to a PC immediately after upload and then erase the entire flash in order to assure that maximum memory is present for subsequent uploads.

The storing of data directly from sondes to the 650 memory, the uploading of data stored in 6-series sondes to the 650, and the management of these data files are described in detail in Sections 3.5, 3.6, and 3.7 of this manual.

3.2.3 650 CONFIGURATIONS

There are a number of ways that you can configure the YSI 650. Below is a list of possible configurations and corresponding diagrams.

- 650 interfaced to a 6-Series sonde.
- 650 interfaced to a 6-Series Sonde and a user-supplied GPS unit.
- 650 interfaced to a PC for data transfer or software upgrade using the PC interface cable
- 650 with rechargeable battery pack being charged

Figure 1. 650 interfaced to a 6-series sonde.

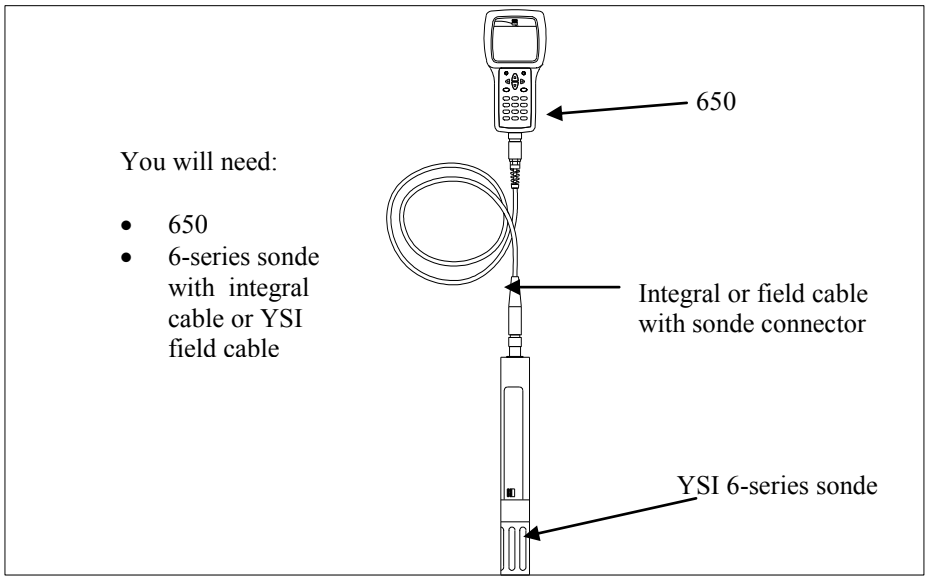

Figure 2. 650 interfaced to a 6-series sonde with user-supplied GPS.

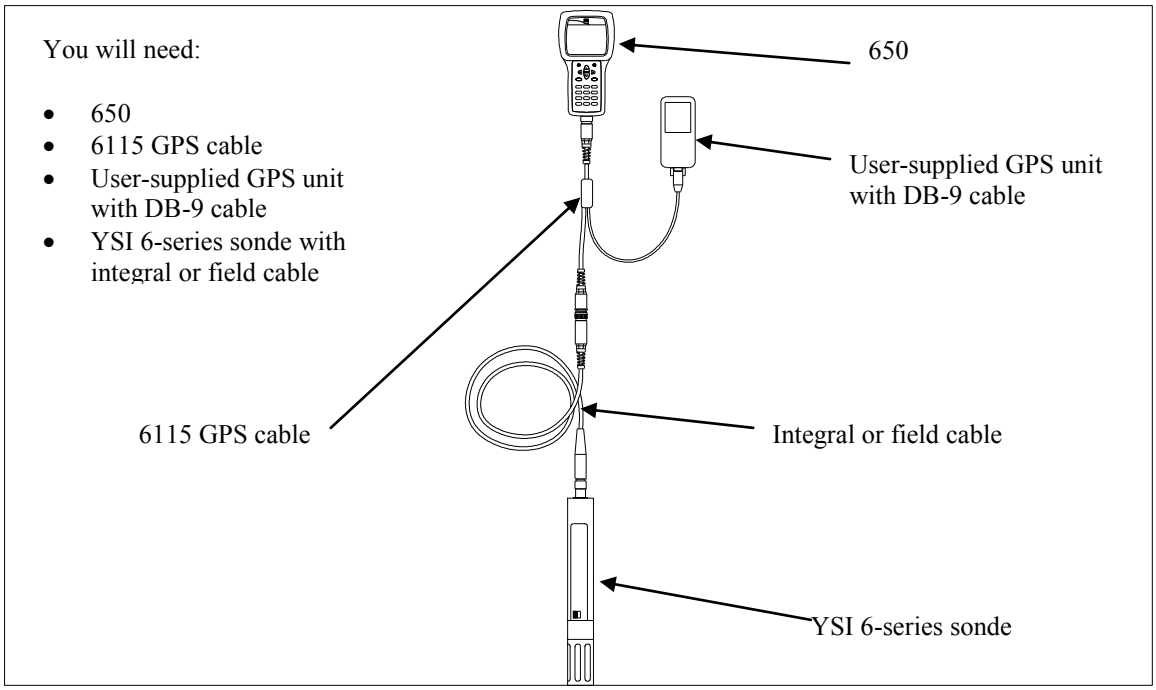

Figure 3. 650 interfaced to PC for data transfer or software upgrade.

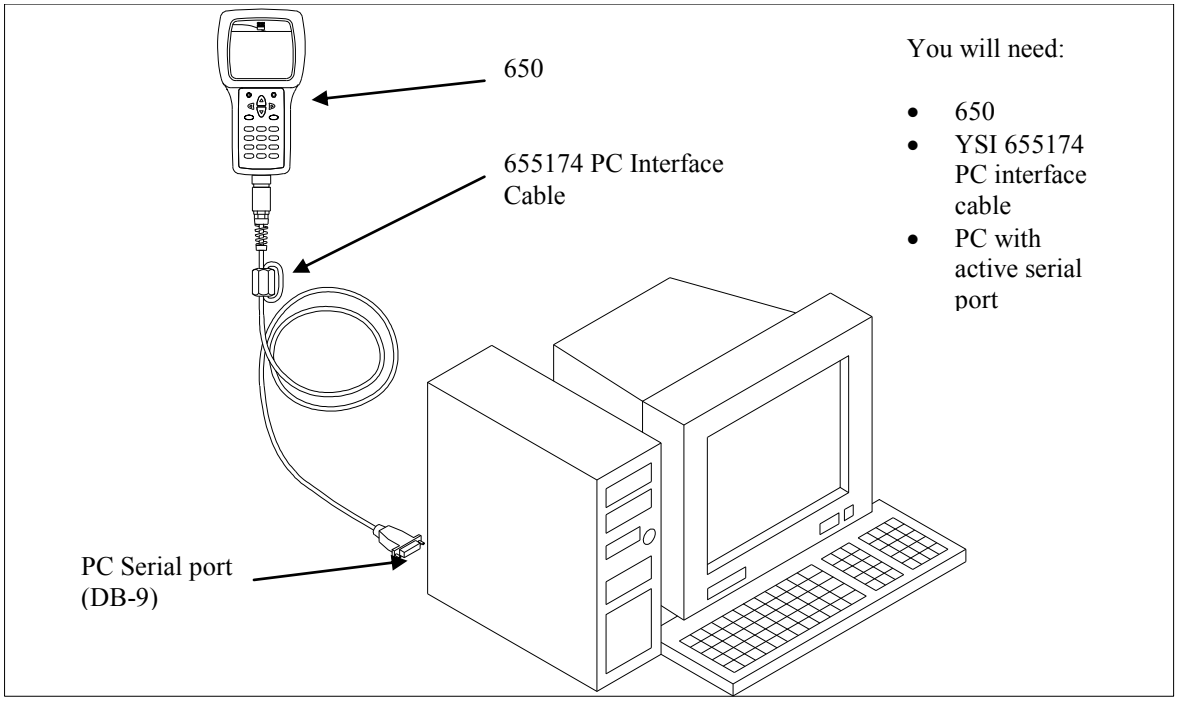

Figure 4. Charging of 650 rechargeable battery pack.

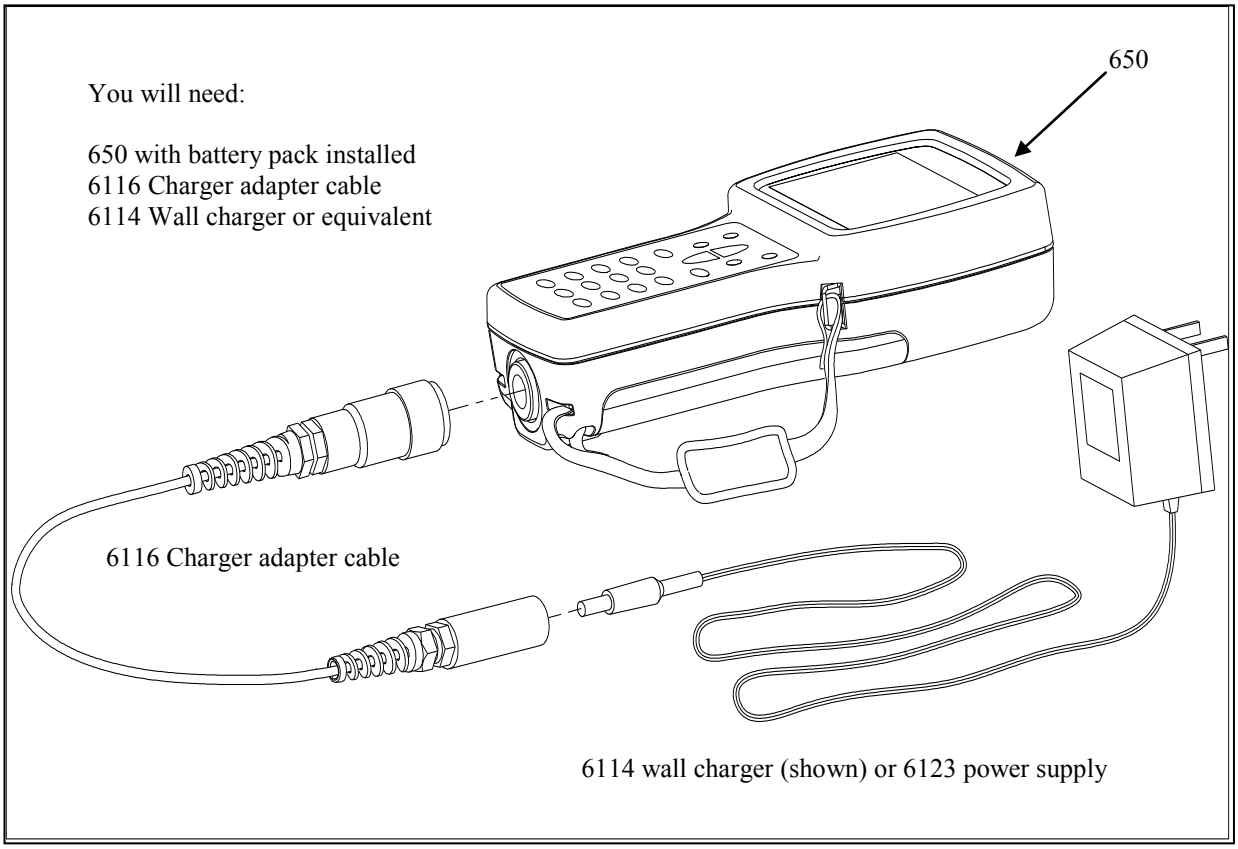

The setup of these configurations is described in detail in subsequent sections of this manual. They are presented here so that your will be able to ascertain if you have all of the parts necessary for your applications.

3.2.4 650 FEATURES

The key physical features of the 650 display and keypad are shown in the figures below.

650 Front View

Note that the YSI 650 keypad consists of 20 keys as shown in the diagram above. There are four function keys, up, down, right and left arrow keys and an alpha/numeric keypad. The top left key that has a green circle and line, , is the ON/OFF key. The top right key, , activates the display backlight. The **Escape** key is labeled Esc and is the **Enter** key.

650 Back View

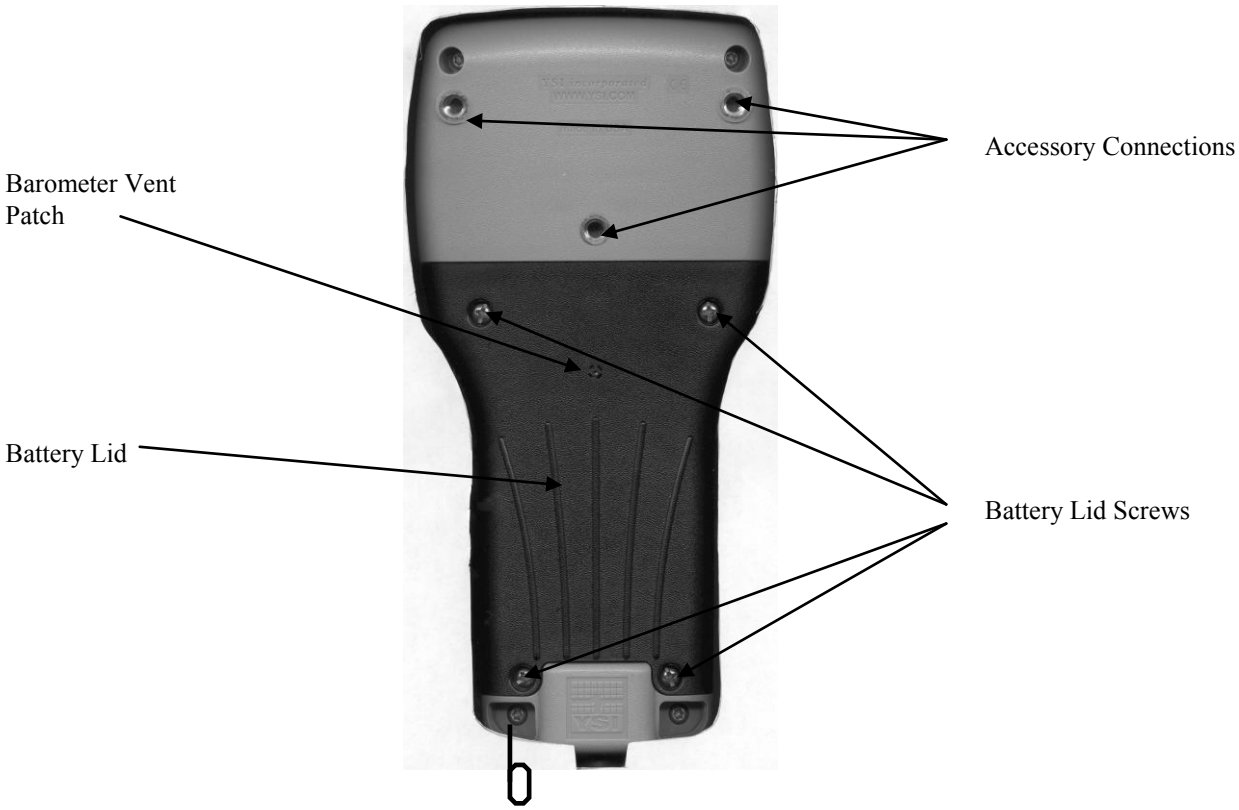

Note that the back of the case contains the battery lid that is attached to the main case with four captive screws and has three fittings for attachment of the ultraclamp and tripod accessories. In addition, the battery lid has a hole that is covered with water-impermeable patch for venting of the optional barometer.

CAUTION: The barometer-venting patch is resident on the inside of the battery lid. Removal of or damage to this patch will result in water leakage into the battery compartment.

The short cord with loop (lanyard) which is attached to the bottom of the case is attached to the strain relief of the sonde cable. Simply open the D-ring, pass the lanyard loop through the opening, and then close the D-ring.

3.2.5 BATTERIES AND CHARGING

The YSI 650 can be powered either with 4 alkaline C cells or a rechargeable NiMH battery pack. With the C-cell configuration, the user will be able to power a typical YSI 6-series sonde (active dissolved oxygen and one optical sensor) for approximately 45 hours of continuous operation. The rechargeable battery pack will allow for about 15 hours of continuous use under these conditions. If the sonde is being powered by its own internal batteries, the 650 batteries will last much longer. YSI Sondes with internal battery capability are the 6920, 6600, 600XLM, and 600 OMS.

This instrument is powered by alkaline or optional nickel-metal hydride batteries, which the user must remove and dispose of when the batteries no longer power the instrument. Disposal requirements vary by country and region, and users are expected to understand and follow the battery disposal requirements for their specific locale.

The circuit board in this instrument contains a manganese dioxide lithium "coin cell" battery that must be in place for continuity of power to memory devices on the board. This battery is not user serviceable or replaceable. When appropriate, an authorized YSI service center will remove this battery and properly dispose of it, per service and repair policies.

3.2.5.1 BATTERY INSTALLATION – C CELLS

Four C cells install easily into the back of the 650. Follow the instructions and diagrams below to install the batteries properly:

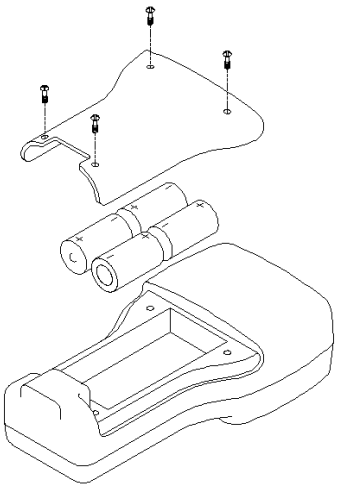

- Using a Phillips or slotted screwdriver, loosen the 4 captive screws on the battery lid and then remove the battery lid completely.
- Insert the cells between the battery clips, being sure to follow the polarity (+ and -) as indicated on the bottom of the battery compartment.
- Make certain that the gasket is properly installed on the battery lid before reinstallation.
- Reinstall battery lid and tighten the 4 captive screws securely and evenly using a Phillips or slotted screwdriver. Do not overtighten.

3.2.5.2 BATTERY INSTALLATION – RECHARGEABLE BATTERY PACK

The YSI 6113 rechargeable battery pack is self-contained and is easily installed according to the instructions and diagrams below:

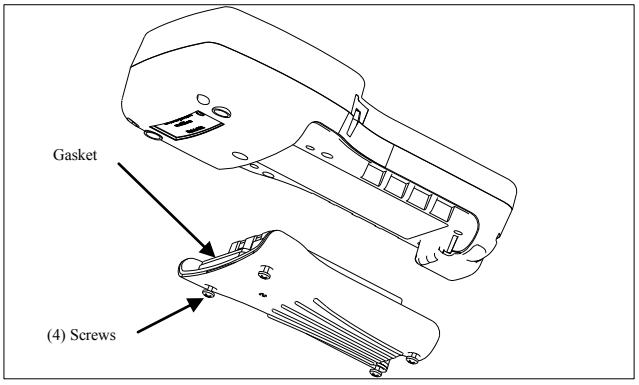

- Using a Phillips or slotted screwdriver, loosen the 4 captive screws on the battery lid and then remove the battery lid completely.
- Put the battery lid in a safe place so that it will be available for future use of C cells.

- Make certain that the gasket is properly installed on the rechargeable battery before installation.

- Insert the rechargeable battery pack assembly into the battery compartment of the 650.
- Tighten the 4 captive screws securely and evenly using a Phillips or slotted screwdriver. Do not overtighten

3.2.5.3 BATTERY CHARGING – RECHARGEABLE BATTERY PACK

The 6117 rechargeable battery pack is charged via the MS-8 connector on the bottom of the instrument and thus the pack must be installed in the 650 for charging. To perform the charging operation, the user will need to locate the proper power supply (6114 for US/Canada/Japan or 6123 with proper power cord for all other countries) and the 6116 charger adapter cable which were supplied with your rechargeable battery pack (6113 for US/Canada, 6126 for Europe, 6127 for China/Australia). As shown in Figure 4 above, first attach the charger adapter cable to the 650, then insert the barrel connector of the power supply into the barrel of the adapter cable, and finally plug the power supply into an appropriate AC power outlet. The pack can be recharged with the 650 either "on "or "off". However, if the instrument is "on", the progress of the charging operation can be viewed in the Status Bar (see Section 3.2.10 below).

To ensure that you get maximum operational time from the rechargeable battery pack, the user should follow the procedures below:

1. Place your display/logger on charge for approximately 2 hours to obtain an 80-90 % regeneration of battery capacity.
2. Place your display/logger on charge for approximately 6 hours to get a full charge.
3. Do not charge the batteries continuously for more than 48 hours.
4. For long term storage, keep your battery pack between the temperatures of –20 C and 30 C and remove it from the 650 case.
5. Do not charge your batteries at temperatures below 0 C or above 40 C.
6. Do not use or store the battery pack at high temperature, such as in strong direct sunlight, in cars during hot weather, or directly in front of heaters.

If the above steps are not followed, it may result in a decrease in the operational lifetime of your battery pack. In addition, pay particular attention to the method of long term storage of the battery pack as is outlined in the following warning:

CAUTION: If the battery pack/650 will not be used for extended periods of time, the user should remove the battery pack from the instrument. Failure to do this may result in overdischarge of the pack which can have a detrimental effect of its lifetime

Note that YSI provides recharge options for many countries in the selection or the 6116, 6126, and 6127 kits. However, it is possible that the power cord options in these kits will not be correct for some users. In these cases, users should purchase the 6126 or 6127 kit and substitute their local PC type power cord for the power cord shipped with the kit. This power cord is usually readily available at any local electronics store.

An optional automotive cigarette lighter charger (YSI 616) is also available for recharging the 650 battery pack. Note that the user will require the 6116 adapter cable to use the cigarette lighter adapter. Instructions and diagrams for configuring your cigarette lighter charger and changing fuses are shown below and are found on the back of the 616 package. The user should save these instructions when unpacking the accessory and keep them for later reference.

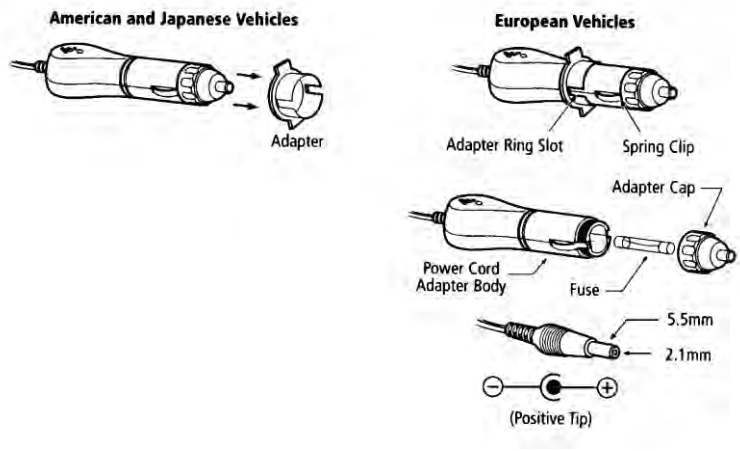

To use the device with an American or Japanese vehicle, slide the adapter ring off of the plug. To use the device with a European vehicle, leave the adapter ring on the plug and position it so the slots on the ring line up with the plug's spring clips. To begin charging your battery pack, first plug the barrel connector of the cigarette lighter charger into the mating end of the 6116 adapter cable. Then attach the MS-8 end of the 6116 adapter cable to the 650. Finally, plug the other end of the cigarette lighter charger into the vehicle's lighter socket.

The 616 cigarette lighter charger contains a 2-ampere fast-blow type fuse. If the power cord stops working properly, unscrew the adapter's cap, remove the tip, and then pull out and check the fuse. See diagram above to remove the fuse. If the fuse is blown or you are unsure, replace it with a new 2-amp fast-blow fuse that is available at electronics stores such as Radio Shack. Reassemble the adapter and securely screw the cap back onto the adapter body.

After you have installed batteries or the rechargeable battery pack into your 650, you are ready to proceed to the next sections.

3.2.6 TURNING THE INSTRUMENT ON

Turn the instrument on by pressing and releasing the on/off button on the top left of the instrument keypad. The following screen should be displayed.

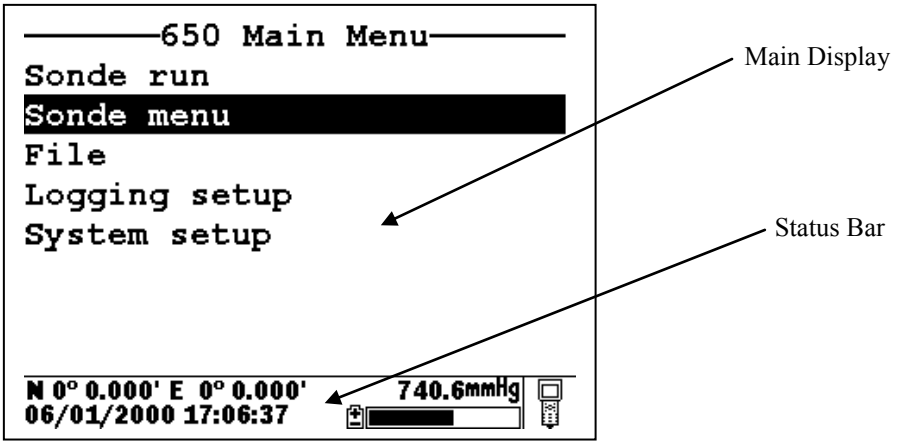

Note that the screen is divided into two sections – the "Main Display" at the top and a "Status Bar" at the bottom. The Main Display will provide access to the 650 and sonde menus and will be used to view sonde sensor readings in real-time, to configure the 650 and the sonde, to calibrate the sonde sensors, and to log data to either sonde or 650 memory. The Status Bar will always show the date and time of the 650 clock (updated in real-time), the remaining battery capacity, the current barometer reading if you have purchased this option, the GPS readings from a user-supplied GPS instrument, and will indicate whether the menu being viewed in the Main Display is associated with your sonde or the 650. Additional information about the Status Bar will be provided in Section 3.2.10 of this manual.

You may also want to take the instrument into a dark room and, with the instrument turned ON, press the backlight key which is located at the top right of the keypad. The instrument backlight should illuminate the LCD so that the display can be read. Pushing the backlight key again will turn the backlight off. The backlight will power off automatically after two minutes of non-use.

3.2.7 ADJUSTING THE DISPLAY CONTRAST

The contrast of the 650 display is automatically temperature compensated to provide a proper display under most field conditions (-10 to 40 C). Some users, however, may wish to alter the display contrast to meet their own preference. In addition, if the instrument is used at more extreme temperatures, the display is likely to require some adjustment.

The contrast is easily adjusted by pressing and holding down the backlight key in the upper right of the keypad and then pressing repeatedly or holding down the up/down arrow keys while observing the display. Pressing the up arrow while holding down the backlight key increases (darkens) the contrast; pressing the down arrow under these conditions decreases (lightens) the contrast.

NOTE: The backlight itself will only be activated if the backlight key is pressed <u>and released</u>. You must <u>hold down</u> the backlight key to adjust the contrast.

3.2.8 USING THE YSI 650 KEYPAD

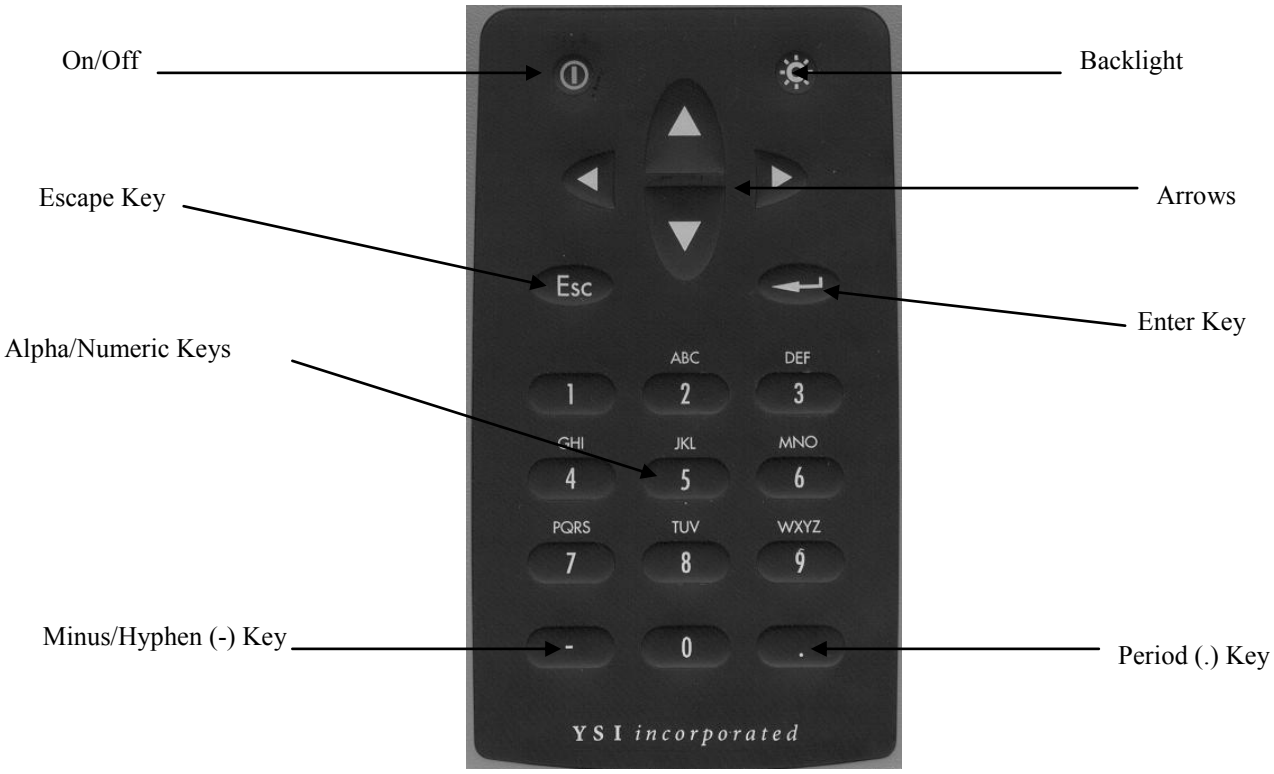

The 650 keypad allows the user to navigate various sonde and 650 menu selections and to make alpha/numeric entries into both the 650 and sonde software. The arrow keys are used to select various options in the menus; the cellular phone-style alpha/numeric keys allow data entry; the **Enter** key is used to confirm selections; and the **Escape** key returns the user to the previous position in the menu structure.

The alpha/numeric keys of the 650 can be used to enter both numbers and letters. For many entries, however, where only numbers are appropriate, the software automatically allows ONLY numeric entry, e.g., the letters (ABC) associated with the "2" key cannot be activated. Examples of this type of fixed numeric entry include setting the clock of the 650 or sonde, entering calibration parameters for sonde sensors, and changing entries such as DO warm-up time and optical wiper interval in the **Sonde Advanced|Sensor** submenu. You will follow an example of this type of entry when you set the 650 clock in the example below.

When both numeric and alpha entry are appropriate for input, the 650 keypad provides a cellular phone-style interface for choosing the proper character. As shown in the above diagram, the 2-9 keys can also be used to input alpha characters. Basically, to activate a particular alpha/numeric character, the user must press the appropriate key repeatedly until the desired letter or number appears in the display. For example, to enter an M, press the numeric 6 key once and release. To enter an N, press the numeric 6 key twice in rapid succession and then release. Lower case letters are also available for input using this basic method. The following chart shows the alpha/numeric sequence available for each numeric key in the order they will appear as the key is pressed repeatedly.

1 -- 1
2 – ABC2abc2
3 – DEF3def3
4 – GHI4ghi4
5 – JKL5jkl5
6 – MNO6mno6
7 – PQRS7pqrs7
8 – TUV8tuv8
9 – WXYZ9wxyz9
0 -- 0

Using this guide, it can be seen that the character "p" will appear and remain in the display by pressing the 7 key six times in succession. The other characters associated with this key ("P", "Q", "R", "S", and "7") will appear during the repeated pressing of the numeric 7 key. However, only the "p" entry will be retained after the key is released after the six keystrokes.

After release of the numeric key for approximately 1second, the cursor will automatically scroll to the right to prepare for the next alphanumeric input. If you make a mistake in the entry, simply return to the previous character with the left arrow key and reenter the number or letter. After the entry is complete, press the **Enter** key to confirm it. You will follow an example of this type of entry when you enter an Instrument ID name for your 650 in the example below.

To familiarize yourself with the basics of the keypad entry system, follow the instructions below to set the date and time for your 650 and to enter an Instrument ID:

Turn the instrument on to display the **650 Main menu**.

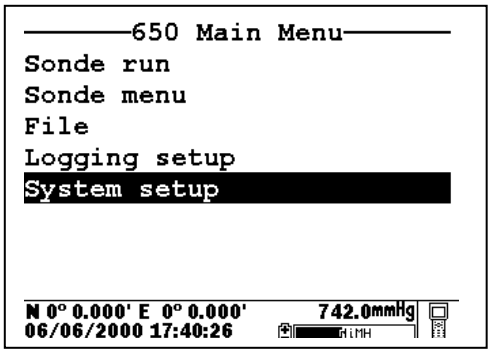

Use the arrow keys to highlight the **System setup** selection and press the **Enter** key. A display similar to the following will appear (Note that the exact format of your displays will depend on the software version):

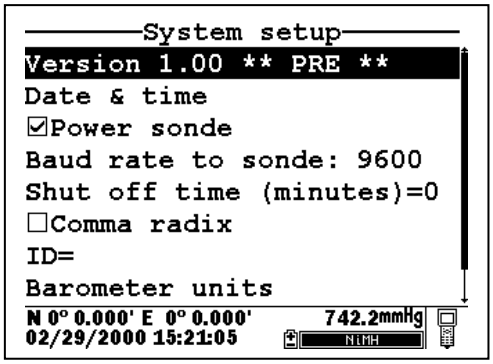

Use the arrow keys to highlight the **Date and Time** selection and press the **Enter** key. The following display will appear:

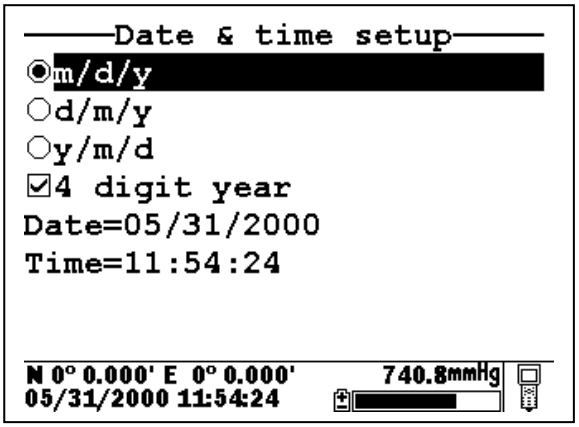

Highlight the selection for your desired date format and press **Enter** to confirm it.

Highlight the 4-digit year selection and press **Enter** to toggle between 2-digit (no check mark present) and 4-digit (check mark present) options.

Highlight the **Date** selection and press **Enter**. A cursor will appear over the first number in the date as shown in the following display.

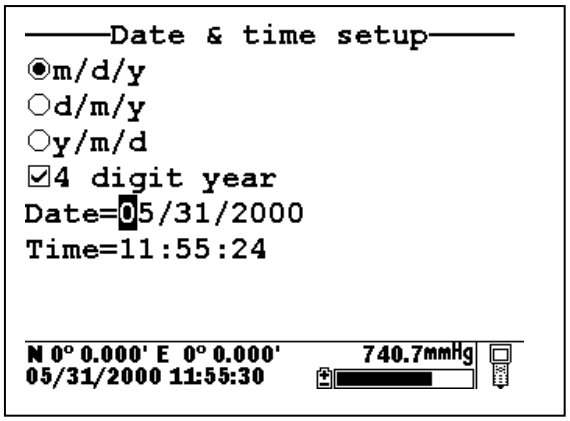

Enter the proper number from the keypad for the first date digit. Note that when you release the key, the cursor moves automatically to the next number. Repeat this process until the date is correct. Then press **Enter** to confirm the Date entry. Note also that, as described above, since alpha characters are inappropriate for this entry, only numeric entry is possible.

Highlight the **Time** selection and press **Enter**. Repeat the process described above for the **Date** to enter your correct local time using the military format. For example, 2:00 PM must be entered as 14:00.

Finally, press the **Escape** key to return to the System setup menu.

Now highlight the **Instrument ID** selection and press **Enter**. The following display will appear.