Department of Environmental Quality

To protect, conserve and enhance the quality of Wyoming's environment for the benefit of current and future generations.

Matthew H. Mead, Governor

Todd Parfitt, Director

May 7, 2014

Billy Oneyear
86 Miller Road
Guernsey, WY 82214

RE: **APPROVAL** of AK Industries 1500-gallon, Two-Compartment, Polyethylene Septic Tank (AKS92550) for use in Wyoming

Dear Mr. Oneyear:

The Water Quality Division (WQD) of the Wyoming Department of Environmental Quality (DEQ) has received the drawings and specifications for the above-referenced septic tank. The WQD evaluated this septic tank and determined that it meets the minimum requirements identified in Chapter 25, Section 8 of the Wyoming Water Quality Rules and Regulations. Subsequently, this product will be placed on our list of approved septic tanks for use in Wyoming. The table below summarizes the dimensions and specifications for the 1,500 gallon, two-compartment polyethylene septic tank.

Outside Dimensions (L x W x H)	126.5" x 63" x 61.25"
Maximum Cover Burial Depth	4 feet
Access Openings	Two 20.75-inch
Inlet / Outlet Height Difference	3 inches
Liquid Level (LL) Depth	50 inches
Tee/Baffle Extensions below LL	Inlet – 8.75"; Outlet – 18"
Clearances for Venting	3.25 inches

Sincerely,

Todd D. Hepworth, P.E.
Assistant Southeast District Engineer
Southeast District, Water Quality Division

TDH/rm/14-0396

cc: DEQ Water & Wastewater Section (via email)

Enclosure: Submitted Septic Tank Drawing

AK PART #:	Description:	Revision #:	Date :
AKS92550	WYOMING SEPTIC / 1500 / BAFFLE / 20-20 LIDS	004	04/14/14

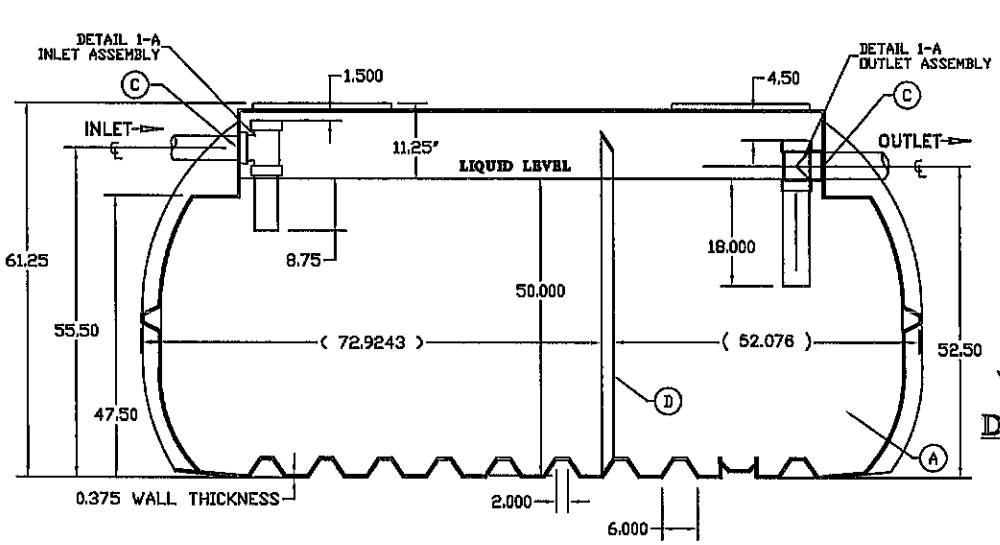

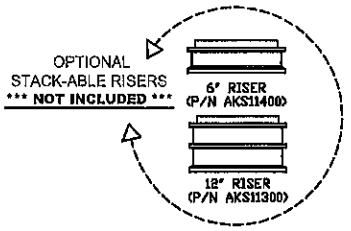

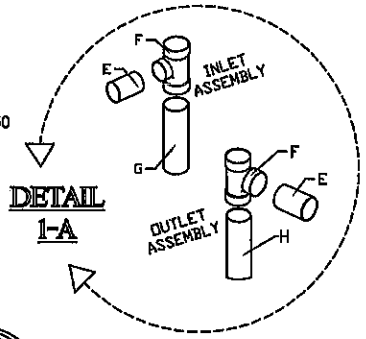

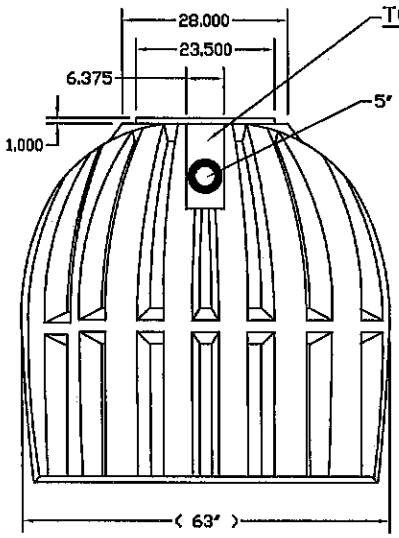

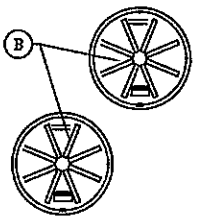

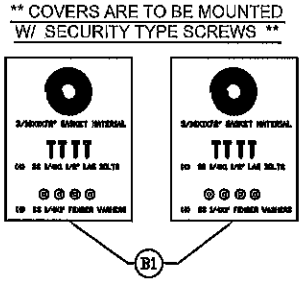

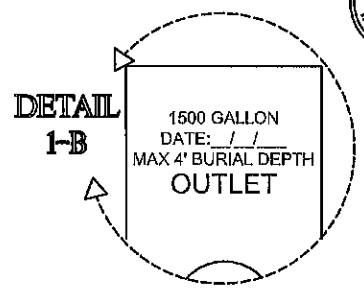

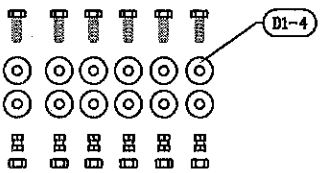

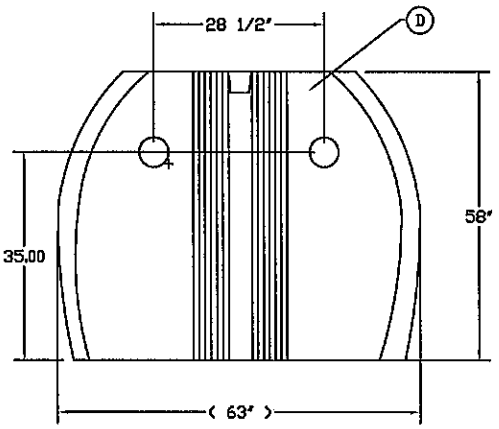

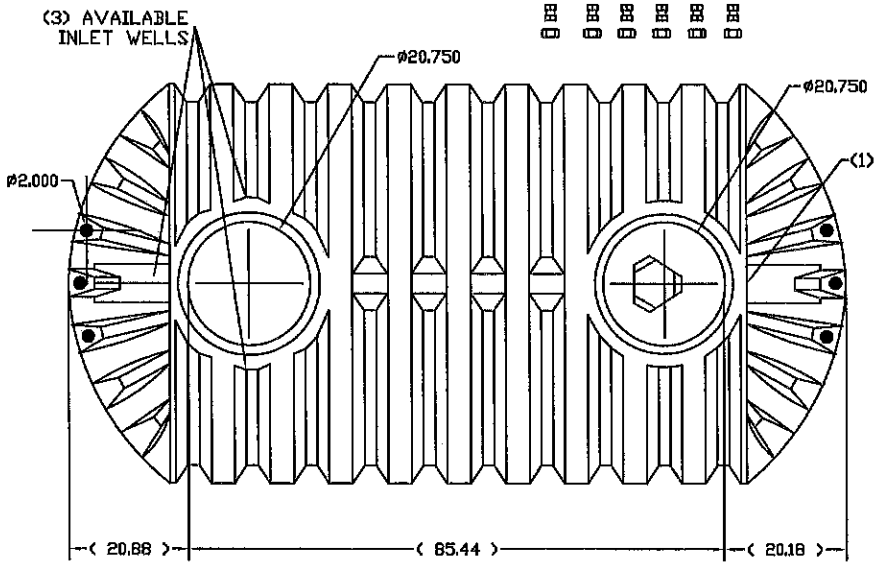

B.O.M.

ITEM	P/N	DESCRIPTION	QTY:
A	AKS50950	1500 GALLON SEPTIC PLAIN	1
B	AKR30190	COVER, 20" TWIST ON LID	2
B1	AKS10030	GASKET PACK/20" LID	2
C	AKR50760	FITTING, 4.00" ADAPT-A-FLEX NS	2
D	AKS10300	1500 BAFFLE	1
D1	AKR10130	INSERT, 1/4"-20 ALUM. OPEN END	6
D2	AKR30060	BOLT, 1/4"-20 X 2" SS ALL THREAD	6
D3	AKR30030	WASHER, 1/4" X 1 1/2" SS FENDER	12
D4	AKR30110	NUT, SS 1/4"-20	6
DETAIL 1-A		INLET/OUTLET ASSEMBLYS	
E	AKR43180	PIPE PVC 4" SCH40	(2) 13" LONG
F	AKR30330	FITTING PVC 4" SCH40 TEE	2
G	AKR43180	PIPE PVC 4" SCH40	(1) 11 3/8"
H	AKR43180	PIPE PVC 4" SCH40	(1) 17 5/8"

Notes:
(D1) ALUM. INSERTS ARE MOLDED IN

Approved by: S. DAVIS	Material:	Scale:	Tolerances are +/- 0.250	DRAWN BY:
Signature:	Polyethylene	NTS	Unless Specified Otherwise	A.DAVIS

THIS DRAWING IS THE SOLE PROPERTY OF AK INDUSTRIES INC.