The State
of Wyoming

Dave Freudenthal, Governor

Department of Environmental Quality

Herschler Building • 122 West 25th Street • Cheyenne, Wyoming 82002

ADMIN/OUTREACH	ABANDONED MINES	AIR QUALITY	INDUSTRIAL SITING	LAND QUALITY	SOLID & HAZ. WASTE	WATER QUALITY
(307)777-7758	(307)777-6145	(307)777-7391	(307)777-7369	(307)777-7756	(307)777-7752	(307)777-7781
FAX 777-3610	FAX 777-6462	FAX 777-5616	FAX 777-6937	FAX 777-5864	FAX 777-5973	FAX 777-5973

January 29, 2003

Den Hartog Industries, Inc.
Attn: Gregory C. Danko
4010 Hwy. 60 Blvd.
P.O. Box 425
Hospers, IA 51238

RE: **APPROVAL** of **1000 gallon** Ace Roto-Mold Two Compartment Polyethylene Septic Tank for use in Wyoming.

Dear Mr. Danko:

The Water Quality Division (WQD) of the Wyoming Department of Environmental Quality(DEQ) has received and reviewed the specifications for your 1000 gallon prefabricated two compartment polyethylene septic tank. The WQD finds that this septic tank design meets the minimum requirements as identified in Chapter 11, Section 39 of the Water Quality Rules and Regulations, except for two conditions which must be imposed. Subsequently, **this product will be placed on our list of approved septic tanks for use in Wyoming** with the following conditions:

1. The manways on the septic tanks (one on each compartment) must be extended to the ground surface because there are no clean-outs provided on the Ace Roto-Mold polyethylene septic tanks.

2. The downward extending legs on the inlet and outlet baffling tees must extend into the middle third of the septic tank liquid.

3. To ensure structural integrity, the manufacturer's instructions regarding filling the tank with water during burial and immediately after pumping it out must be followed during installation and clean-outs.

If you should have any other questions please call me at (307) 777-6183.

Sincerely,

Ronald L. Ewald

Ronald L. Ewald
Engineering Evaluator
SE District, Water Quality Division

RLE/bv/3-0206.ltr

cc: Septic Tank Status File
Larry Robinson, SPO Program Manager, WQD
Lou Harmon, SE District Engineering Supervisor, WQD
Dennis Lamb, NE District Engineering Supervisor, WQD
Rick Estes, Assistant NE District Engineer, WQD
Jeff Hermansky, NW District Engineering Supervisor, WQD
Doyle Conklin, SW District Engineering Supervisor, WQD
Mark Baron, Assistant NW & SW District Engineer, WQD
Laramie County Environmental Health Division

10213A

C

PROPRIETARY DATA

PROPERTY OF ACE ROTO-MOLD MFG., INC. INFORMATION FURNISHED HEREIN IS THE PROPERTY OF ACE ROTO-MOLD MFG., INC.AND SHALL NOT BE USED, DISCLOSED TO OTHERS, OR COPIED WITHOUT THE EXPRESSED WRITTEN CONSENT OF ACE ROTO-MOLD MFG., INC. ALL RIGHTS RESERVED.

DETAIL A

DIVIDER FILLER PANEL DETAILS

USE THIS FILLER PANEL TO FILL THE SERVICE SLOT IN THE DIVIDER PANEL.

DETAILS SHOWN ARE ACCORDING TO IAPMO SPECIFICATIONS.

SPECIFIC PORTING AND FITTINGS USED IN THIS PANEL FOR FLOW BETWEEN COMPARTMENTS MUST BE SUPPLIED BY INSTALLER AND SIZES VARIFIED ACCORDING TO YOUR LOCAL REQUIREMENTS IFDIFFERENT FROM IAPMO.

FASTEN PANEL ON INLET SIDE OF DIVIDER WITH #10 S.S. SHEET METAL SCREWS EVERY 3".

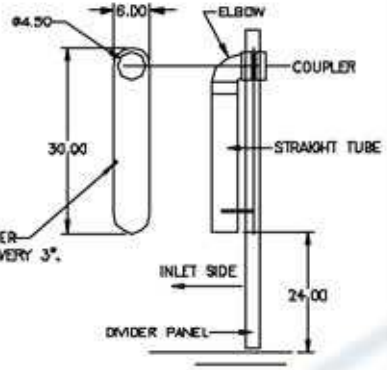

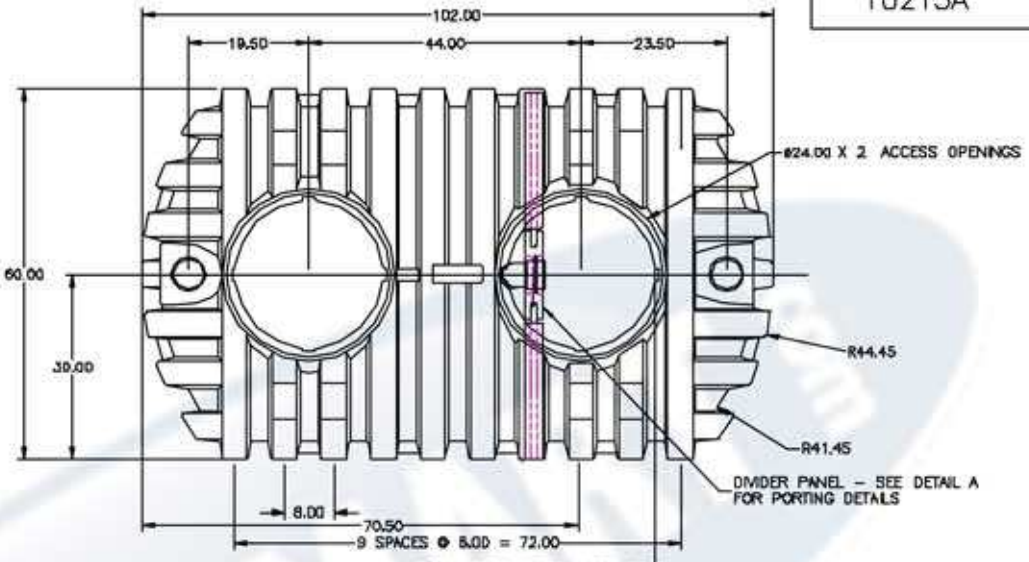

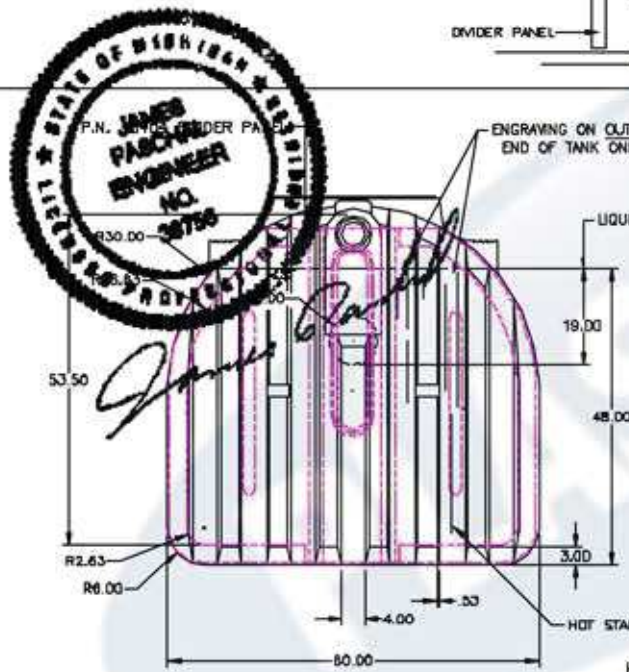

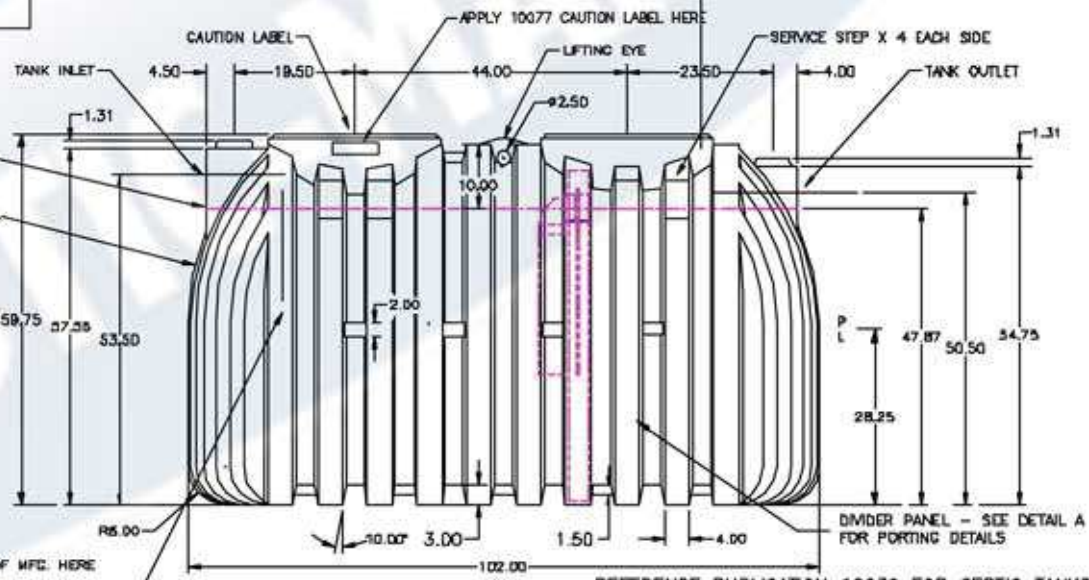

© REFERENCE PUBLICATION 10039 FOR SEPTIC TANKS OR PUBLICATION 10149 FOR CISTERN TANKS FOR SPECIFIC INSTALLATION GUIDELINES.

REV	DESCRIPTION	DATE	APPRD
C	ADDED PUBLICATION REF	9/30/05	
B	DIVIDER FTG. REVISION	4/26/99	
A	GENERAL REVISION	1/11/99	

DRAWN / DATE: REH / 11/1/97

APPRD. / DATE: REH / 11/1/97

MATERIAL: MOBIL 134 HDPE OR EQUIVELENT REFERENCE MATERIAL DATA SHEET FOR SPECIFIC PROPERTIES.

ALL DIMENSIONS ARE IN DECIMAL INCHES
TOLERANCES UNLESS OTHERWISE SPECIFIED
± .5% @ 68° F

THIRD ANGLE PROJECTION ANSI 14.5M

NOTES:
1. NOM. WALL @ .250
2. YELLOW COLOR
3. SHOT WEIGHT 330 LBS.

PLASTIC-MART 866-310-2556

CLIENT / DESCRIPTION: 1000 GAL. TWO COMPARTMENT SEPTIC TANK

SCALE: N.S.

PART NO. AST–1000–2