Dave Freudenthal, Governor

Department of Environmental Quality

To protect, conserve and enhance the quality of Wyoming's environment for the benefit of current and future generations.

John Corra, Director

August 18, 2005

Den Hartog Industries, Inc.
Attn. Gregory C. Danko
4010 Hwy. 60 Blvd.
P.O. Box 425
Hospers, IA 51238-0426

RE: **APPROVAL**: New Models Ace Roto-Mold Polyethylene Septic Tank for use in Wyoming
1250 Gallon Two Compartment Septic Tank, **Model: AST-1250-2WY**,
1250 Gallon Single Compartment Septic Tank, **Model: AST-1250-1WY**,
1500 Gallon Two Compartment Septic Tank, **Model: AST-1500-2WY**, and
1500 Gallon Single Compartment Septic Tank, **Model: AST-1500-1WY**.

Dear Mr. Danko:

The Water Quality Division(WQD) of the Wyoming Department of Environmental Quality(DEQ) has received and reviewed the specifications for above identified polyethylene septic tanks. The WQD finds that these specific "Wyoming Specifications" septic tank designs meet the minimum requirements as identified in Chapter 11, Section 39 of the Water Quality Rules and Regulations, except for two conditions, which must be imposed. Subsequently, **these products will be placed on our list of approved septic tanks for use in Wyoming** with the following conditions:

1. The manways on the septic tanks (one on each compartment) must be extended to the ground surface because there are no separate clean-outs provided on the Ace Roto-Mold polyethylene septic tanks.

2. To ensure structural integrity, the manufacturer's instructions regarding filling the tank with water during burial and immediately after pumping it out, must be followed during installation and clean-outs.

If you should have any other questions please call me at (307) 777-6183.

Sincerely;

Ronald L. Ewald

Ronald L. Ewald
Engineering Evaluator
SE District, Water Quality Division
RLE/jc/5-0928

cc: Septic Tank Status File
Larry Robinson, W&WW Program Manager, WQD

Lou Harmon, SE District Supervisor, WQD
Dennis Lamb, NE District Supervisor, WQD
Rick Estes, NE District Engineer, WQD
Jeff Hermansky, NW District Supervisor, WQD
James Brough, NW District Engineer, WQD
Doyle Conklin, SW District Supervisor, WQD
Mark Baron, SW District Engineer, WQD

AST-1250-2

B

(A) REFERENCE PUBLICATION 10039 FOR SEPTIC TANKS OR PUBLICATION 10149 FOR CISTERN TANKS FOR SPECIFIC INSTALLATION GUIDELINES.

© DEN HARTOG INDUSTRIES, INC.

Copyright. All information furnished within this document, electronic file or design correspondence is the property of Den Hartog Industries, Inc. and shall not be used, disclosed to others or copied without the expressed written consent of Den Hartog Industries, Inc.

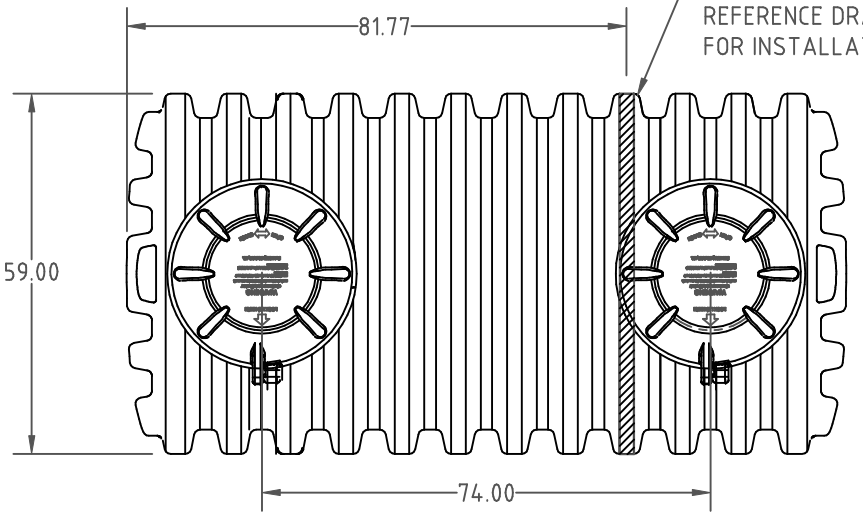

Typical Engraving

Ace Roto Mold
A Division of
Den Hartog Industries, Inc.
TANK CAPACITY_____ — 1250 Gallons 4732 Liters
DATE OF MANUFACTURE_____ — Month / Year molded
DATE OF ASSEMBLY_____ — Month / Year assembled
SERIAL NUMBER_____ — Sequential serial number
STATE / LOCATION_____ — State assembled for (if applicable)

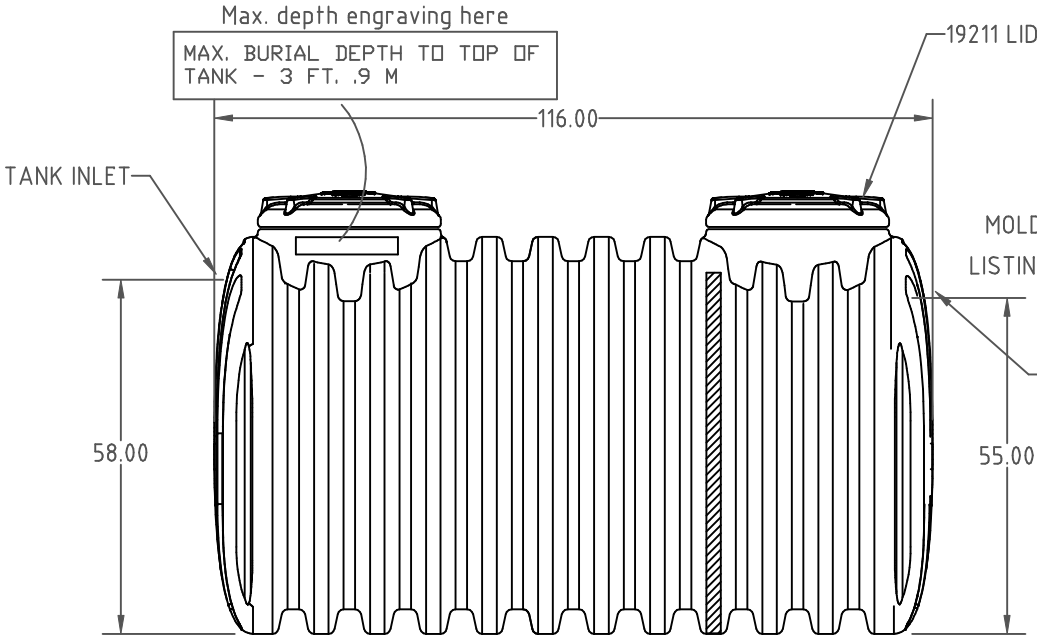

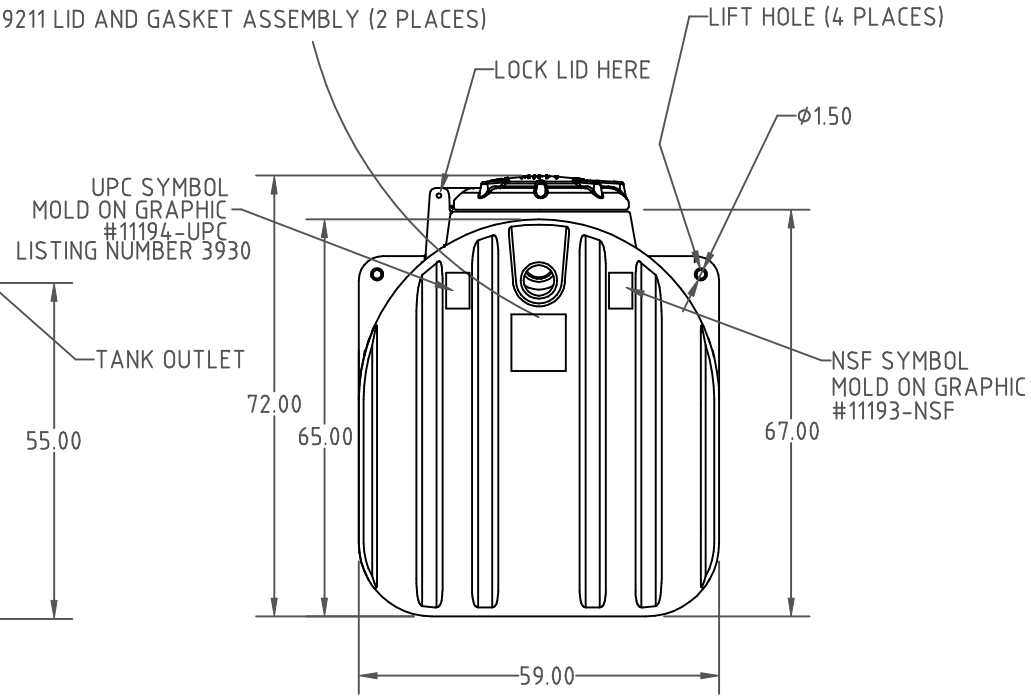

REV	DESCRIPTION	DATE	APPRD
B	ADDED UPC & NSF GRAPHIC	5/25/07	DHJ
A	ADDED PUBLICATION REF	9/30/05	NVE

DRAWN / DATE: REH / 3/15/04

APPRD. / DATE: REH / 3/15/04

MATERIAL: EXXON HD8660 HDPE OR EQUIVELENT REFERENCE MATERIAL DATA SHEET FOR SPECIFIC PROPERTIES.

ALL DIMENSIONS ARE IN DECIMAL INCHES
TOLERANCES UNLESS OTHERWISE SPECIFIED
± 1% @ 68° F

THIRD ANGLE PROJECTION
ANSI 14.5M

NOTES:
1. MIN. WALL @ .250
2. YELLOW COLOR
3. SHOT WEIGHT 412 LBS.

Ace Roto-Mold
A DIVISION OF DEN HARTOG INDUSTRIES, INC.
HOSPERS DRIVE S., BOX 421, HOSPERS, IOWA 51238

CLIENT / DESCRIPTION: 1250 GAL. TWO COMPARTMENT SEPTIC TANK

SCALE: N.S.

PART NO.: AST-1250-2