The State
of Wyoming

Department of Environmental Quality

Jim Geringer, Governor

Herschler Building • 122 West 25th Street • Cheyenne, Wyoming 82002

ADMIN/OUTREACH	ABANDONED MINES	AIR QUALITY	INDUSTRIAL SITING	LAND QUALITY	SOLID & HAZ. WASTE	WATER QUALITY
(307) 777-7758	(307) 777-6145	(307) 777-7391	(307) 777-7369	(307) 777-7756	(307) 777-7752	(307) 777-7781
FAX 777-3610	FAX 777-6462	FAX 777-5616	FAX 777-6937	FAX 777-5864	FAX 777-5973	FAX 777-5973

October 3, 2000

Bill Button
c/o Mathews, Inc.
2166 15th Street
Denver, Colorado 80202

RE: **Review and Approval of Norwesco Redesigned Single Compartment Septic Tanks**

Dear Mr. Button:

The Wyoming Department of Environmental Quality (DEQ)/Water Quality Division (WQD) has received and reviewed the revised plans for the two-lid single compartment Norwesco septic tanks. Please note that the WQD has previously approved the Norwesco 1000, 1250, and 1500 gallon sizes in both the single compartment and two compartment models. The review finds that the changes in design are acceptable and the revised design is hereby approved.

Because the construction of the top of the new two-lid single compartment tanks is essentially the same as the already approved two compartment tanks, this change is approved. Therefore, since the 1000, 1250, and 1500 gallon single compartment Norwesco septic tanks are already on our approved list, they can and will remain on the list.

If you have any further questions, please call me at (307) 777-6183.

Sincerely,

Ronald L. Ewald

Ronald L. Ewald
Environmental Senior Analyst
SE District, WQD

RLE/bb/02523.ltr

REVISIONS				
ZONE	REV	DESCRIPTION	DATE	APPROVED
	C	REDRAWN, DIMS UPDATED	17FEB97	

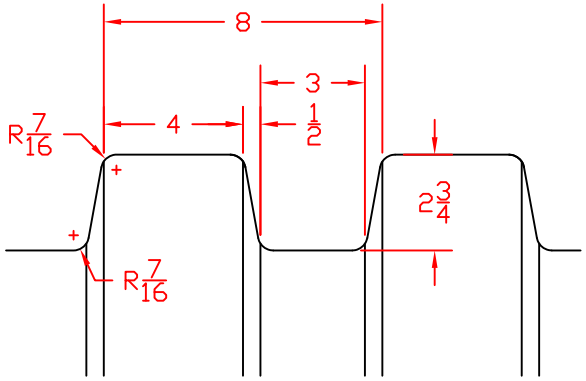

RIB DETAIL 1/4 SCALE

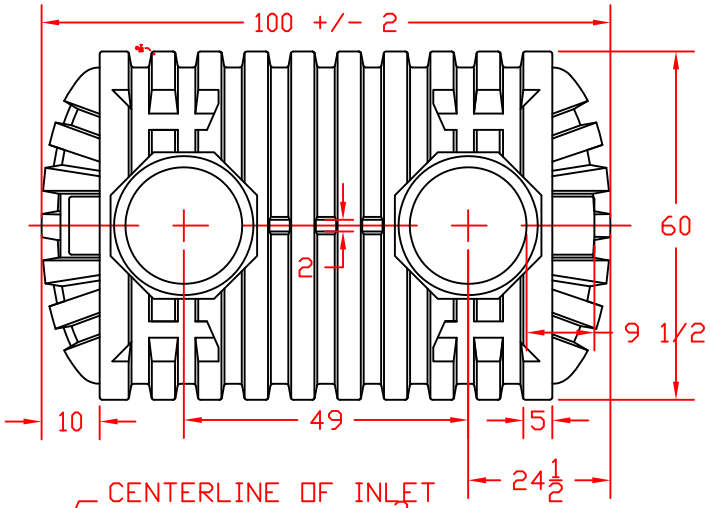

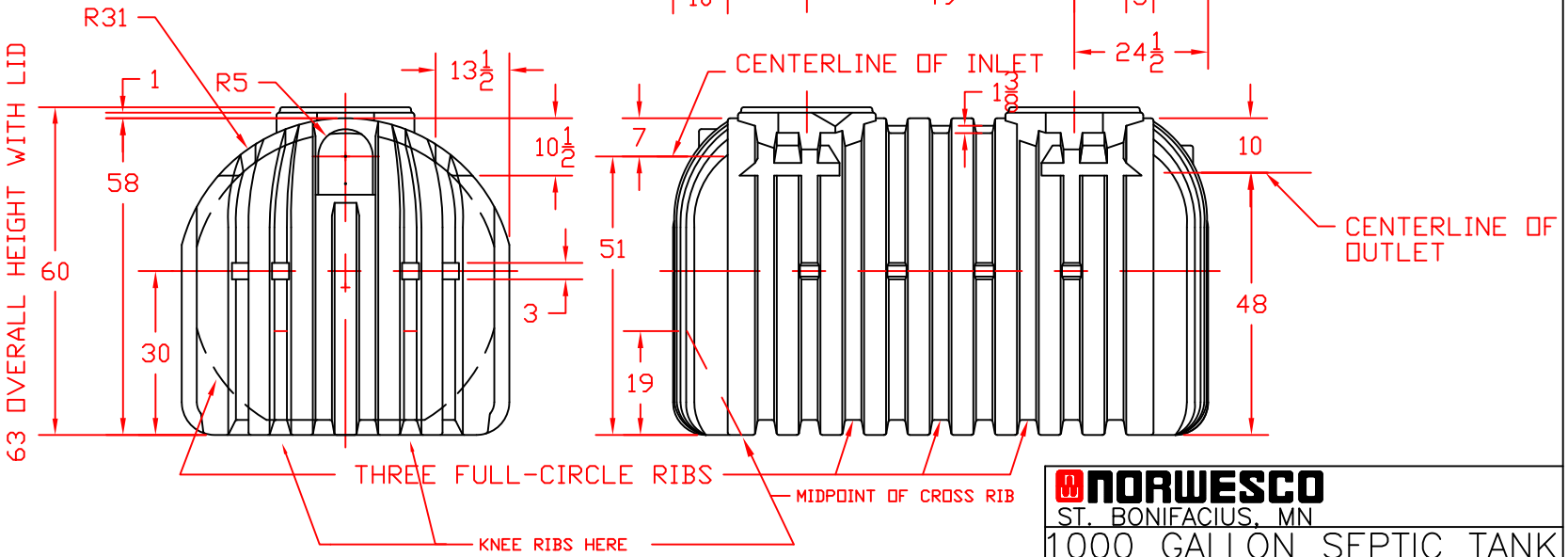

NORWESCO
ST. BONIFACIUS, MN

1000 GALLON SEPTIC TANK

JTP 17FEB97	SIZE B	FSCM NO.	DWG NO.	REV C
	SCALE 1/24		SHEET 1 OF 2	