THE STATE OF WYOMING

JIM GERINGER
GOVERNOR

Department of Environmental Quality

Herschler Building ● 122 West 25th Street ● Cheyenne, Wyoming 82002

ADMINISTRATION	ABANDONED MINES	AIR QUALITY	INDUSTRIAL SITING	LAND QUALITY	SOLID & HAZARDOUS WASTE	WATER QUALITY
(307) 777-7758	(307) 777-6145	(307) 777-7391	(307) 777-7368	(307) 777-7756	(307) 777-7752	(307) 777-7781
FAX 777-7682	FAX 634-0799	FAX 777-5616	FAX 777-6937	FAX 634-0799	FAX 777-5973	FAX 777-5973

April 8, 1998

Norwesco
Attn. Anastasia R. O'Hara
P.O. Box 439
St. Bonifacius, MN 55375-0439

RE: **APPROVAL** of 1000, 1250, and 1500 gallon Two Compartment Polyethylene Septic Tanks for use in Wyoming.

Dear Ms. O'Hara:

The Water Quality Division (WQD) of the Wyoming Department of Environmental Quality (DEQ) has received and reviewed the specifications for your 1000, 1250, and 1500 gallon two compartment polyethylene septic tanks. The WQD finds that these septic tank designs meet the minimum requirements as identified in Chapter 11, Section 39 of the Water Quality Rules and Regulations, except for one condition which must be imposed. Subsequently, these products will be placed on our list of approved septic tanks for use in Wyoming with the following condition:

> "The manways on the septic tanks (one on each compartment) must be extended to the ground surface because there are no clean-outs provided on the Norwesco septic tanks."

Sincerely;

Ronald L. Ewald

Ronald L. Ewald
Engineering Evaluator
SE District, Water Quality Division

RLE:LL#81183

cc: Septic Tank Status File
Larry Robinson, SPO Program Manager, WQD
Lou Harmon, SE District Engineering Supervisor, WQD
Don McKenzie, NE District Engineering Supervisor, WQD
Jeff Hermansky, NW District Engineering Supervisor, WQD
Randy Taylor, SW District Engineering Supervisor, WQD

REVISIONS				
ZONE	REV	DESCRIPTION	DATE	APPROVED
	C	REDRAWN, DIMS UPDATED	17FEB97	

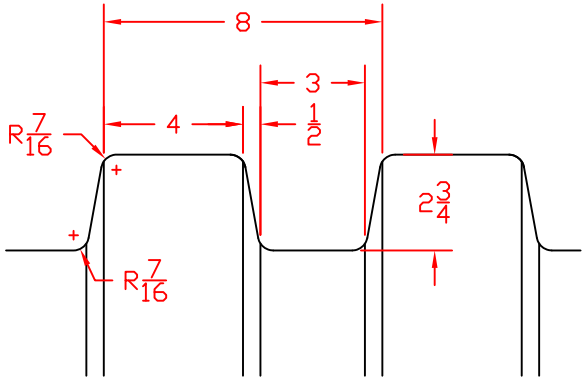

RIB DETAIL 1/4 SCALE

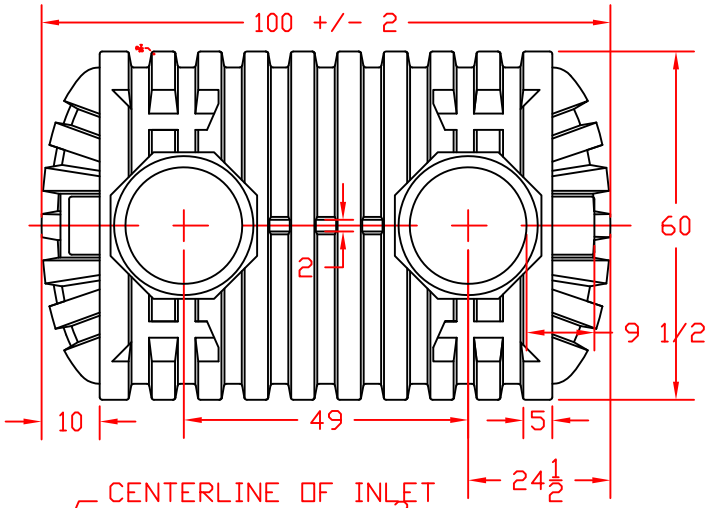

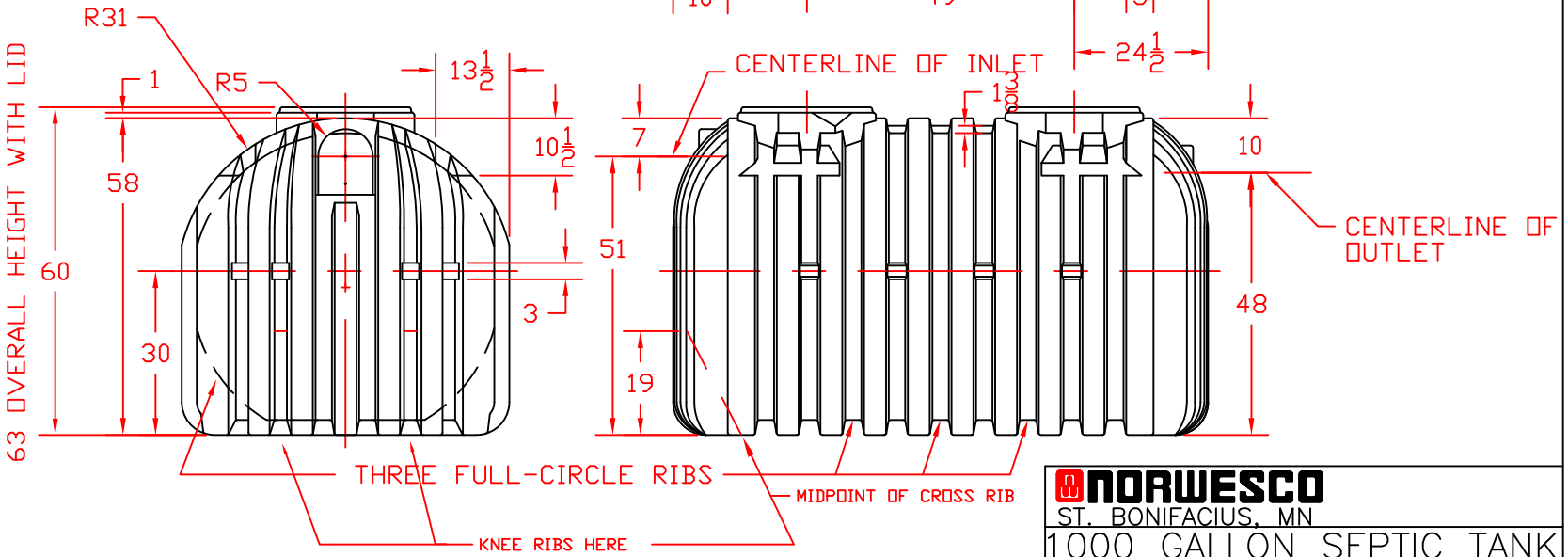

NORWESCO
ST. BONIFACIUS, MN

1000 GALLON SEPTIC TANK

JTP 17FEB97	SIZE B	FSCM NO.	DWG NO.	REV C
	SCALE 1/24		SHEET 1 OF 2	