Department of Environmental Quality

To protect, conserve and enhance the quality of Wyoming's environment for the benefit of current and future generations.

Dave Freudenthal, Governor

John Corra, Director

June 25, 2009

Precast Concrete Products
Attn: Dan Tyler
P.O. Box 5023
Etna, Wyoming 83118

RE: Review of Septic Tank Specifications for Inclusion or Non-inclusion on the:
Wyoming APPROVED SEPTIC TANK List

Dear Mr. Tyler:

The Water Quality Division (WQD) of the Wyoming Department of Environmental Quality (DEQ) has received and reviewed the specifications for the several different sizes and designs of concrete septic tanks submitted. The WQD finds that the following tanks meet all of the minimum design and specification requirements as identified in Chapter 11, Section 39 of the Water Quality Rules and Regulations. These tanks, which follow here, will be included on the **"A-List"** of the Approved Septic Tank list:

APPROVED for use in Wyoming / A-List:

1000 gallon, Single compartment concrete septic tank,
1000 gallon, Two compartment concrete septic tank, and
1500 gallon, Two compartment concrete septic tank.

Please note that the "A-List" of the approved list contains the following requirement for all tanks, "Septic Tank Clean-Out Riser Requirement - Either a 6-inch diameter clean-out riser or the manway from each compartment of the septic tank must be extended to the ground surface from all septic tanks."

If you should have any other questions please call me at (307) 777-6183.

Sincerely,

Ronald L. Ewald

Ronald L. Ewald
Consulting Engineer
SE District, Water Quality Division

RLE/rm/9-0548

cc: Septic Tank Status File
Lou Harmon, Program Manager, W&WW Section, WQD
Karen Farley, NE District Supervisor, WQD
James Brough, NW District Supervisor, WQD
Mark Baron, SW District Supervisor, WQD
Rich Cripe, SE District Engineer, WQD

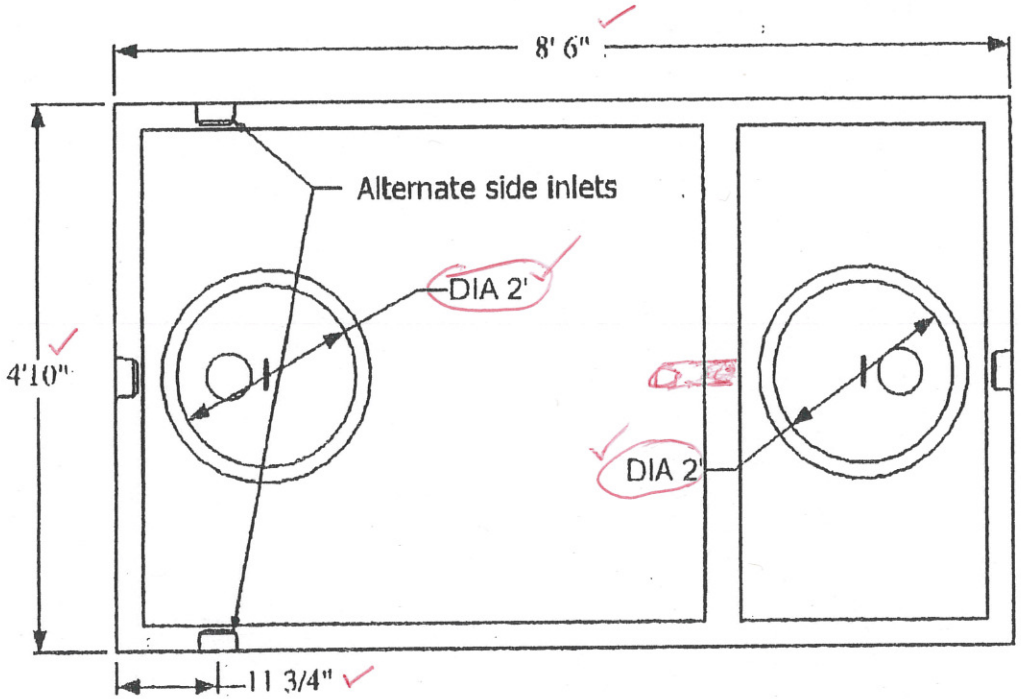

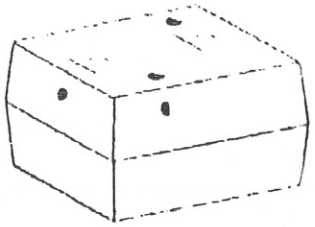

PRECAST CONCRETE PRODUCTS
P.O. Box 5023 Etna, WY 83118
307.880.0080
Fax 307.883.2133

OK - RLE 06-24-09

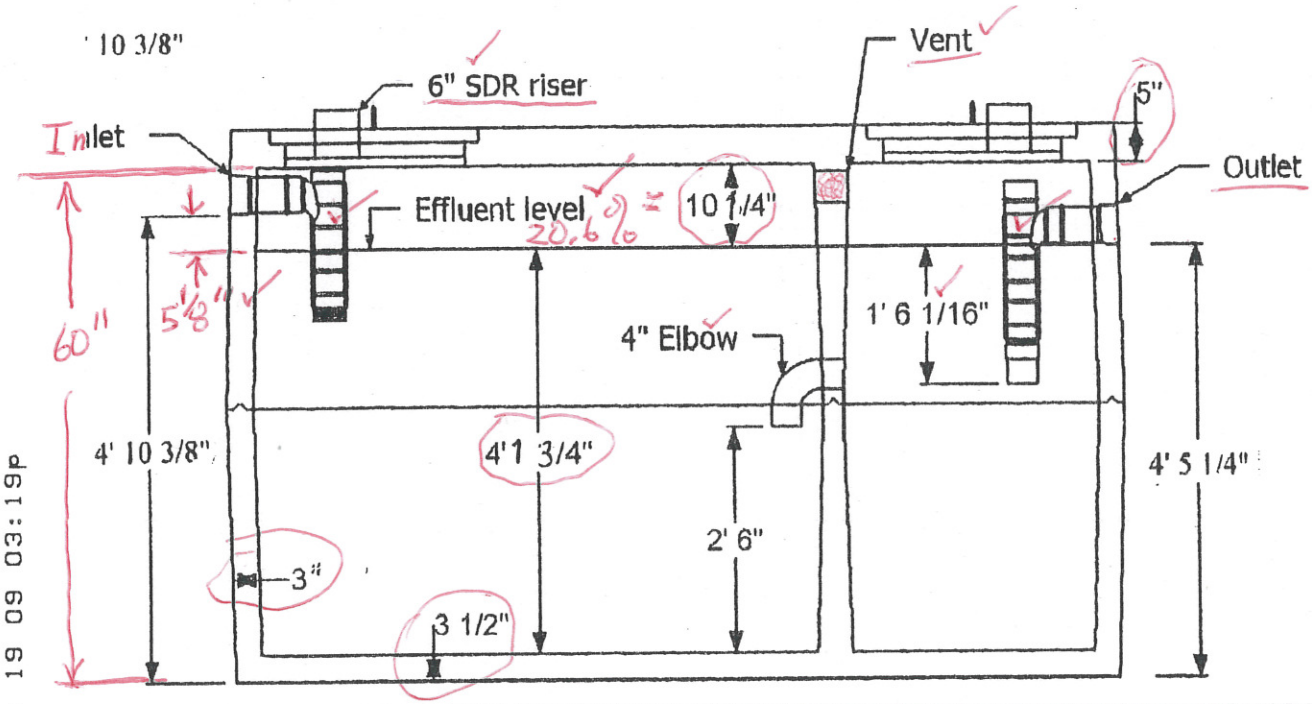

Model: 1000 gallon 2 piece dual compartment
Weight: 4830 lbs each half
Notes: 1- 6 1/2 bag concrete mix req 2- All vertical surfaces reinforced with 6/6 - 10-10 welded wire mesh 3- All corners, lids, and floor reinforced with #4 rebar 4- 6" SDR riser pipes and caps provided to surface. Optional 24" access available